A DICTIONARY OF EGYPTIAN ARABIC

ARABIC-ENGLISH

EL-SAID BADAWI

MARTIN HINDS



LIBRAIRIE DU LIBAN

مُعْجَمُ اللُّغَةِ العَرَبِيَّةِ المِصْرِيَّة

عربي - إنكليزي

السَّعيد بَدَوي

مارتن هايندس

مَكتبَة لبْنان

A DICTIONARY OF EGYPTIAN ARABIC

مُعْجَمُ اللُّغَةِ العَرَبِيَّةِ المِصْرِيَّة

A DICTIONARY OF EGYPTIAN ARABIC

ARABIC-ENGLISH

MARTIN HINDS
University of Cambridge

EL-SAID BADAWI
The American University in Cairo

Issued under the sponsorship of
The American University in Cairo

LIBRAIRIE DU LIBAN

Librairie du Liban
Riad Solh Square, Beirut.
Associated companies, branches and representatives throughout the world.

© LIBRAIRIE DU LIBAN, 1986
All rights reserved. No part of this publication may be reproduced, stored in a retrieval system or transmitted in any form or by any means, electronic, mechanical, photocopying, recording or otherwise, without the prior, written permission of the Publishers.

This work was developed under a contract with the U.S. Office of Education Department of Health, Education and Welfare, and with support from the Ford Foundation.

Printed in Lebanon by
TYPOPRESS, Beirut

مُعْجَمُ اللُّغَةِ العَرَبِيَّةِ المِصْرِيَّةِ

عَرَبِيّ - إِنْكْلِيزِيّ

السَّعِيد بَدَوِي
الجَامِعَة الأَمِيرِكِيَّة فِي القَاهِرَة

مَارتِن هَايندس
جَامِعَة كَمبرِيدج

مَكتَبَة لبنَان

CONTENTS

Acknowledgements	VII
Introduction	VIII
Arrangement of Entries	XII
The Dictionary	1-966
Illustrations	967–982

Acknowledgements

The compilers are indebted to a great many people for their advice and assistance. In the first place, the project would not have come into being at all without the support and encouragement of the late Christopher Thoron, who was President of the American University in Cairo from 1969 until his untimely death in 1974. Among other officers or former officers of the American University in Cairo who did much to facilitate work, particularly in times of difficulty, were Dr Richard Crabbs, Dr Hussein Fawzy, Dr Mohammed Allam, Dr Cecil Byrd, Dr Thomas Lamont, Mr Peter Nichols, Dr Richard Pedersen, Dr Moyer Hunsberger, Dr Marsden Jones, Mr Ahmed El-Lozy, Mr Carl Schieren and Miss Priscilla Blakemore.

The project enjoyed the support of several institutions. A major part of the funding was provided by the U.S. Office of Education, among whose officers Mrs Julia Petrov, who was our understanding and longsuffering Program Officer, and Dr Richard Thompson deserve special thanks for their help. Substantial support was also provided by the Ford Foundation, in which connection acknowledgement is due to Mr William Irelan, Dr Ronald Wolfe, Mr Courtney Nelson, Mr Samuel Bunker, Dr Björn Jernudd and Professor Richard Tucker. The moral support of the Arabic Language Academy in Cairo was indispensable, and for this we owe thanks in particular to Dr Ibrahim Madkour, formerly Secretary and now Chairman of the Academy, for his encouragement and advice (although the content of the dictionary is of course the responsibility of the compilers alone), and to Mr Ibrahim El-Tarzi.

The basic work of preparation of this dictionary took place between the years 1972-1977. Two experts whose help was indispensable during this period were Dr Raymond Bathurst, who handled the technical and computing side of the operation, and Dr Karl Stowasser, who initiated us into the elusive art of lexicography and readily shared with us the labour of drafting and redrafting some of the most complex entries. We were also fortunate enough to have the benefit of informed comments and criticisms from Professor T.F. Mitchell and Mr David Cowan. Work on the "production line" included labours of herculean proportions, particularly on the part of our principal assistants Dr Humphrey Davies and Mrs Carol Bebawi, while special mention needs to be made too of the contribution of Dr Elizabeth Sartain (notably her work in the area of etymologies), Dr Kristina Nelson, Mr Mohammed El-Saati, Mr Maged El-Kommos and Mr Jeffrey Bennett; the illustrations are the work of Mrs Elizabeth Rodenbeck. To these and to the very many others — too numerous to name — who gave of themselves unstintingly in this work, we extend our thanks.

Introduction

This dictionary is intended to satisfy a longstanding need on the part of speakers of English for a dictionary with which to comprehend Egyptian Arabic. During the past twenty-five years progress has been made in the lexicography of Arabic dialects other than Egyptian, principally as a result of efforts based at Georgetown University; and the study of literary Arabic was transformed for speakers of English by the appearance in 1961 of Hans Wehr's *A dictionary of modern written Arabic.* Such developments have highlighted the need for documentation of the dominant regional form of Arabic. For Egyptian Arabic is not only the native tongue of over forty-five million people who constitute just under one third of the Arabic-speaking world; it is also — because of Egypt's important cultural and political role as an Arab state — the most widely understood form of regional Arabic.

The language described here is essentially spoken language and, as such, it may be contrasted with formal written language. In this connection, it may first be remarked that the prevalence of the view that literary Arabic *(al-lugha al-fuṣḥā)* should replace its "corrupt" variant, the popular language *(al-lugha al-'āmmiyya),* as the normal vehicle of spontaneous spoken communication cannot be allowed to obscure the fact that this is not the case in Egypt at present and there are no grounds for anticipating any major change in this respect. Moreover, the associated notion that only *al-fuṣḥā* can be credited with a "real" existence as a "proper" system of language (to the exclusion of the *'āmmiyya* of the uneducated) fails to explain how educated and uneducated Egyptians alike — all of whom communicate with each other in the course of their daily round by means of *'āmmiyya* of one sort or another — contrive to achieve some measure of mutual intelligibility. This dictionary is accordingly based on an alternative view of language variation in Egypt, a view which sees the *'āmmiyya* of illiterate people as no less a *system* of language than is the inherited classical *fuṣḥā* and — in the absence of any clear picture of historical evolution — envisages a synchronic language scheme in which these two systems are at extremes from one another, while between them lie three other distinguishable systems. Each of these five systems, or *levels,* contains elements which exist also in one or more of the other levels, but in varying proportions; although the *divisions* between the levels are of course blurred rather than clear-cut, each level can nonetheless be typified by its own specific combination of linguistic and allied social, educational and psychological characteristics.

This scheme[1] distinguishes two levels of *fuṣḥā* and three levels of *'āmmiyya.* The older of the two levels of *fuṣḥā,* which may be termed *fuṣḥā al-turāth,* is specifically the linguistic vehicle of the legacy of Islamic high culture and religion, while contemporary *fuṣḥā,* which may be termed *fuṣḥā al-'aṣr;* is the vehicle of modern culture and technology. In Egypt, *fuṣḥā al-turāth* varies only minimally from the classical descriptions of *fuṣḥā,* as might be expected in what is now in effect a liturgical language. *Fuṣḥā al-'aṣr,* on the other hand, as the vehicle of today's intellectual needs, exhibits features which contrast with the usual classical conventions — notably a marked preference for nominal, rather than verbal, sentences; moreover, when employed orally in Egypt, *fuṣḥā al-'aṣr* displays other departures (phonological, morphological and syntactic) from the norms of *fuṣḥā al-turāth,* and these departures for the most part occur in more pronounced forms in the various levels of *'āmmiyya.* This dictionary is not concerned with lexical items which are *restricted* to one or both of these levels of *fuṣḥā,* on the ground that they are

[1] The scheme is set out in detail in al-Sa'īd Muḥammad Badawī, *Mustawayāt al-'arabiyya al-mu'āṣira fī miṣr* (Cairo, 1973).

common to Egypt and other parts of the Arabic-writing world and are (or should be) documented elsewhere.

Three levels of *'āmmiyya* can usefully be distinguished and it is with these that this dictionary is concerned. The mother tongue of any given Egyptian child is one of only two of these, the principal distinction here being whether the family background of the child is characterized by literacy or illiteracy. By the time a child reaches school age, he will have acquired a type of mother tongue which can be broadly classified as the *'āmmiyya* either of the "enlightened" *(al-mutanawwirīn)* or of the illiterate *(al-ummiyyīn)*, the latter being predominant. If the child then goes to school, he is made to function not on his own linguistic level but on the level of *fuṣḥā al-'aṣr* (in secular schools) or of *fuṣḥā al-turāth* (within the Azhar system). It is here, in respect of the individual — rather than in the broader frame of the totality of Egyptian language variation — that the phenomenon termed diglossia can usefully be recognized and studied, for from this time the child advances (or fails to advance, as the case may be) simultaneously on two separate language levels, advance in one being linked with advance in the other. What may be regarded as a fruitful culmination of this process — in the form of mastery of the third, acquired, level of *'āmmiyya*, namely that of the highly educated *(al-muthaqqafīn)* — is restricted to a small percentage of the population. This level of *'āmmiyya* is in effect the spoken counterpart of the written *fuṣḥā al-'aṣr* and is used only in appropriate contexts of interaction between *muthaqqafīn* or would-be *muthaqqafīn;* their language in more mundane contexts is ordinarily *'āmmiyyat al-mutanawwirīn*, although some may also initially have been speakers of *'āmmiyyat al-ummiyyīn*.

A few examples of linguistic distinctions between these three broad levels of *'āmmiyya* may be useful here. *'Āmmiyyat al-muthaqqafīn*, being the *'āmmiyya* most strongly influenced by *al-fuṣḥā*, is characterized phonologically by a measure of flexibility in respect of both consonants and vowels: although the ث , the ذ and the ظ are usually rendered as *s*, *z* and *ẓ* respectively, they are sometimes given the phonetic values of *fuṣḥā*, and the ق frequently occurs as *q*; the *fuṣḥā* diphthongs *aw* and *ay* also occur, albeit less commonly than *oo* and *ee;* and *fuṣḥā* long vowels are sometimes preserved in unstressed positions. In the phonology of *'āmmiyyat al-mutanawwirīn*, however, the element associable with *fuṣḥā* is smaller: the ث, the ذ and the ظ are commonly rendered as *t*, *d* and *ḍ*, and less commonly as *s*, *z* and *ẓ*, while the ق only infrequently occurs as *q*; the diphthongs *aw* and *ay* normally disappear, as do *fuṣḥā* long vowels which fall outside the Egyptian system of word stress. In the phonology of *'āmmiyyat al-ummiyyīn*, the ث,the ذ and the ظ are rendered as *t*, *d* and *ḍ* with very few exceptions, and the ق as *q* is rare (e.g. *muqri*, *qur'ān*).

As far as morphology and syntax are concerned, passive forms are fairly common in *'āmmiyyat al-muthaqqafīn*, are much less common in *'āmmiyyat al-mutanawwirīn*, and are almost entirely absent in *'āmmiyyat al-ummiyyīn;* the residual occurrences of the *i'rāb* of *fuṣḥā* and of *fuṣḥā* negation systems to be found in *'āmmiyyat al-muthaqqafīn* are not to be found in the two other levels of *'āmmiyya;* the use of verbal nouns and the occurrence of verbal sentences are far more common in *'āmmiyyat al-muthaqqafīn* than in the two other levels; with these two other levels comes greater use of constructions involving *bitā'* and *fī(h)*, as well as an additional system of enumeration in contexts of ordering and itemizing; finally, *'āmmiyyat al-ummiyyīn* is characterized in particular by its partiality for formulaic expressions and clichés.

The total scheme of language variation and interaction in Egypt can be represented in diagrammatical form thus:

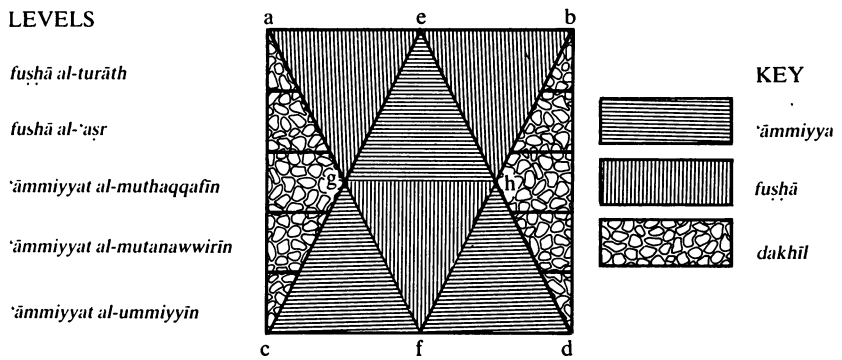

In this diagram, the line a-b represents what is theoretically the highest level of "correctness" in the literary

language, i.e. what is widely esteemed as the pure *fuṣḥā* described by classical grammarians and lexicographers. The line c-d, on the other hand, represents what is theoretically the least educated type of *'āmmiyya,* i.e. the form of language which exhibits the greatest number of linguistic differences from *fuṣḥā* and enjoys little or no esteem within the community. Lines a-f and b-f represent the erosion of features attributed to the line a-b; in other words, they represent the proportional distribution of *fuṣḥā* features within the various levels. Conversely, lines c-e and d-e represent the erosion of features attributed to the line c-d; in other words, they represent the proportional distribution of *'āmmiyya* features within the various levels. The area e-g-f-h accordingly represents the overlap of the literary and colloquial languages, while the areas a-g-e and e-h-b represent "pure" *fuṣḥā* features and the areas c-g-f and f-h-d represent "pure" *'āmmiyya* features. The areas a-g-c and b-h-d represent the proportional distribution of foreign *(dakhīl)* influence within the five levels.

In connection with foreign borrowings it should first be stressed that what may be foreign to the Arabic component of Egyptian Arabic is not necessarily foreign to Egypt. Arabic was, after all, a language at one time foreign to Egyptians, and the labelling of ancient but surviving Coptic and Greek elements as "foreign" is intended to signify their foreignness to Arabic rather than to Egypt. The identification of existing lexical items with ancient Coptic forms is, moreover, fraught with difficulty (more is said about this below) and there is often no way of knowing whether an identifiably Greek form first gained some currency in Egypt before the Arab conquest (effectively completed in 641 AD) or after it. All that can usefully be said here in this regard is that there seems to have been a fusion from the seventh century onwards of one or more kinds of Arabic with certain pre-existing elements in Egypt, together with the super-addition of further foreign borrowings. The Arabic character of the language is pervasive, to the extent perhaps of having recast in an Arabic mould some of what was absorbed from the indigenous linguistic environment, for example in the vocabulary of riparian agrarian life, which was alien to the Arab cultural heritage. Such recasting is evident in the clustering of semantically related forms around verb roots which seem unlikely to have their origin in Arabic; on the other hand, there are also instances where such verb-root evolution has not taken place, and in this respect Egyptian Arabic can be contrasted with Syrian Arabic, which is more productive of verb roots in such circumstances. In general terms, then, Egyptian Arabic can be regarded as consisting of two main lexical categories, each of which can be subdivided: 1. *Arabic:* a) items which coincide nearly or completely with counterparts existing in literary Arabic, and b) items which have recognizable counterparts in literary Arabic, while yet differing from them in some significant and specifically Egyptian fashion. 2. *Non-Arabic:* a) items apparently specific to Egypt and without Arabic counterparts, and not identifiable as relatively modern foreign borrowings, and b) items identifiable as relatively modern borrowings.

The levels which contain the smallest proportions of non-Arabic items are *fuṣḥā al-turāth* and *'āmmiyyat al-ummiyyīn,* the former because of its static and frozen character and the latter because illiteracy has the effect of insulating its speakers from the direct influence of modern culture and the outside world. In *'āmmiyyat al-ummiyyīn,* the majority of non-Arabic items are old or fairly old residents in the language (Coptic, Persian and Turkish, together with some Greek, Italian, French and English), mostly in such areas as agriculture, food, the household and administration; normally, only major and dramatic events, such as war, can account for the admission of new borrowings at that level (e.g., *nabalm*). A greater number of non-Arabic items is to be found both in *fuṣḥā al-'aṣr* and in *'āmmiyyat al-mutanawwirīn,* although of differing types. The items in *fuṣḥā al-'aṣr* for the most part belong to the vocabulary of modern culture and technology and have either achieved recognition from the Arabic Language Academy or have simply acquired currency by the legitimizing force of written usage. Non-Arabic items in *'āmmiyyat al-mutanawwirīn,* on the other hand, relate for the most part to areas such as fashion, imported cosmetics, modern household appliances etc., which are beyond the financial reach and — often — the inherited tastes of speakers of *'āmmiyyat al-ummiyyīn;* thus, while many of the non-Arabic items occurring in *'āmmiyyat al-ummiyyīn* occur also in *'āmmiyyat al-mutanawwirīn,* the converse does not hold true. Finally, it can be noted that it is *'āmmiyyat al-muthaqqafīn* that contains the greatest number of non-Arabic items: this is because it makes use of items to be found in all the other levels, because its speakers are most directly in contact with influences from outside, and because they are not as restrained in speech as they are in writing. Indeed, nearly all newly borrowed items make their entrance into Egypt by way of this level and from this point may move also into *fuṣḥā al-'aṣr* (e.g., *siryaali*) or into *'āmmiyyat al-mutanawwirīn* (e.g., *ʕil-ʃaylaynar*), although some items do not move further and may die out naturally (e.g., *ʃin-noohaaw*).

It is the purpose of this dictionary to document stable lexical items occurring in any one or more of the three levels of *'āmmiyya* defined above. Lexical items or forms restricted to *'āmmiyyat al-ummiyyīn* are marked with an arrow pointing downwards and items or forms restricted to *'āmmiyyat al-muthaqqafīn* (other than items which are self-evidently restricted to that level) are marked with an arrow pointing upwards. Although the designation "Egyptian Arabic" has been employed, the focus is on Cairo and the phonological frame is that of Cairo and the Delta, to the exclusion of Upper Egypt where the phonology is markedly different; Alexandria, too, has been denied the closer attention that it clearly deserves. Rural items given here belong to the rural scene in the vicinity of Cairo and in the Delta, although the seemingly endless range of local variants there has by no means been covered exhaustively. Other items may be assumed to be current in Cairo unless otherwise indicated.

The entries have been drafted with the primary purpose of fulfilling the needs of an English-speaking user who requires a general, overall-descriptive, synchronic, comprehension dictionary of Egyptian Arabic at all levels of society. As an overall-descriptive synchronic dictionary, it is intended to describe the language as it is now, rather than as it was, as it may be in the future, or as some would like it to be. Particular importance has been attached to the provision of numerous examples, both transparent in meaning and non-transparent. One departure from normal practice in bilingual synchronic lexicography of modern languages is, however, a modest attempt to provide some information of an etymological character; more is said about this below, but it may be stressed here that the compilers are well aware of the limitations of the present 2000-item etymological contribution. As for highly specialized terminology, and compound terms in particular, the question of what to include and what to leave out across the various subject areas has been no less problematical here than in the compilation of any overall-descriptive dictionary. Special attention has been paid to *termini technici* in traditional areas of activity, which are fairly stable in the language but for the most part less well documented than the *termini technici* of modern science and technology; but it is clear that much subject-related work is needed to a greater depth than has been possible here if a large part of the highly specialized vocabulary of traditional Egyptian handicrafts is not to pass into oblivion. The main geographical names have been included, both inside and outside Egypt; personal names have been included only in special cases, notably where idiomatic expressions are involved. For a succinct description of the grammar of Egyptian Arabic, the user is referred to T.F. Mitchell, *An introduction to Egyptian colloquial Arabic* (London, Oxford University Press, 1956, repr. 1978); mention may here be made also of T.F. Mitchell, *Colloquial Arabic: the living language of Egypt* (London, English Universities Press, 1962) and Ernest T. Abdel-Massih, *An introduction to Egyptian Arabic* (Ann Arbor, The University of Michigan, 1975).

Although there can be no doubt that this work suffers from shortcomings of a kind inevitable in a pioneering work, in this case exacerbated by a dearth of relevant linguistic studies, the status of pioneer in the field must in truth be accorded to Socrates Spiro, whose Egyptian Arabic-English dictionary first appeared in 1895 under the title *An Arabic-English vocabulary of the colloquial Arabic of Egypt containing the vernacular items and expressions, slang phrases, vocables etc. used by native Egyptians,* and in revised form in 1923 under the title *An Arabic-English dictionary of the modern Arabic of Egypt.* Spiro's work gives about 12,500 fairly detailed entries, attempts to identify borrowings from other languages, and provides some contextual illustrations, but despite its merits it is now of value only for its intrinsic historical interest and is, understandably enough, inadequate and misleading as a guide to Egyptian Arabic of the present day. Many terms given by Spiro (particularly those of Turkish origin) have since become obsolete, others have changed in sense or form, and numerous new lexical items and expressions have gained acceptance since his time, whether by borrowing from other languages or by internal derivation for purposes of new or substantially overhauled institutional, technological and ideological terminology. Accordingly, no reliance was placed on Spiro during the compilation of this dictionary, although a check at the final stage did yield some items which would otherwise have been missed.

A fundamental feature of the present work is that it has been undertaken as a dictionary of a "vacuum" type, based on field work and raw data without reference to any previous dictionary (apart from the final check of Spiro just mentioned). This is not to say that relevant published work was ignored, but attestations were not accepted merely on the authority of the printed word, and the overwhelming bulk of the data was oral and transcribed from tape-recordings. Several million words of material were edited down to a corpus of 400,000 words covering all aspects of Egyptian life, mostly in context strings, and were encoded with accompanying lexical analysis in machine-readable form so that they could be processed by computer in a way which yielded an ordered distillation of

all encoded material and analysis. The drafting was based on this distillation and resulted in the present text of over 22,500 headword entries. This figure may be compared with the 35,000 headword entries of Wehr (third edition) in a text of about the same length and with the 14,000 headword entries in a text of about half the length to be found in *A dictionary of Iraqi Arabic: Arabic-English* compiled by Woodhead and Beene (Georgetown 1967). The relatively greater length of the average headword entry in the present work can be attributed mainly to the quantity of illustrative examples included in many of the 30,000 sense divisions, among them over 6,500 idiomatic and non-transparent usages.

Arrangement of Entries

1. *Roots*

The Arabic rooting system is employed, with modifications appropriate to the arrangement of Egyptian Arabic. Roots containing verbs are normally treated as they would be in the lexicography of literary Arabic, except that roots including radicals associated with the literary ث and ذ are given in their Egyptian forms, with cross-references from the literary form of the root; thus the headword *ladʕa* appears under the root ل د ع and there is a cross-reference to that root from the literary root ل ذ ع. The rooting of items containing the glottal stop associated with Arabic ق preserves that ق, however, since the uvular rendering of ق coexists in the language with the glottal rendering, while the ث and ذ (with one exception of little importance) in effect represent phonemes which do not exist in Egyptian Arabic.

In cases where two or more Egyptian variants of a literary Arabic root exist, these are sometimes brought together and sometimes kept separate — always with cross-references — according to semantic criteria. Thus ر ك د and ر ك ز are kept apart as separate roots, both cross-referenced from ر ك ذ; on the other hand, there is every reason for keeping together all the items associated with a literary root such as ث ل ث and on such occasions the dominant Egyptian root has been used for grouping purposes, so that the root ت ل ت heads all relevant entries, both *tilt, talat* etc. and *sulus, sulaasi* etc.; there is a simple cross-reference to ت ل ت from the literary root ث ل ث, and another cross-reference from the minor sibling Egyptian root س ل س with a listing of the relevant headwords to be found under ت ل ت, viz. *sulus, sulaasi* etc.

Identical roots containing groups of lexical scatter semantically distinct from each other have been separated and numbered off. However, where two or more items with identical radicals exist as isolated forms, these have been given under a single root, such a root being within parentheses. The rooting of items which cannot readily be associated with verbs has been carried out by reference to the headword in its transcribed form, e.g., ى د د for *yadd.* Non-verbal Egyptian forms and foreign borrowings which cannot be regarded as having a place in *fuṣḥā al-turāth* take long vowels into account e.g., ع ش ا ن for *ʕafaan* and ص ل و ن for *ṣaloon;* final short vowels are sometimes regarded as long for this purpose in any position up to the fourth radical, e.g., ب ا ش ا for *baafa* and س ن م ا for *sinima.* Where it appears from lexical scatter that some assimilation can be regarded as having taken place in a headword, this has been taken into account in the selection of the radicals, e.g., the root ء ن ب و for the headword *ʔambuuba* /n pl *ʔanabiib*/. Where, however, an item has an exact counterpart long resident in classical Arabic, the literary root form has been accorded to it even when a verb form is lacking, e.g., the root خ رف for the headword *xaruuf.* Basically, the user who refers to literary root forms should have no difficulty in finding the right place, albeit by means of cross-references. Two final points may be mentioned here: where the root exceeds five radicals, the first four are given followed by a dash; and the ordering of roots takes gemination into account, instead of placing geminate roots at the head of a series, e.g. ش د د follows خ د ش instead of preceding it.

2. *Headwords*

All headwords are given in two forms, viz. a form in Arabic script and a phonetic representation given in italic transcription. The forms given in Arabic script are intended to serve as a guide to the common written form, subject to the limitation that Egyptian Arabic is still essentially a spoken language without firm orthographic conventions. The following points may be noted in connection with headwords:

i) *The ordering of headwords* within a root entry is according to the principle of first giving the simple verb and forms directly associated with it, followed by non-verbal forms grouped and ordered according to length, and

finally derived verbs and forms associated with them.

ii) *The symbols* used in conjunction with transcribed headwords are:

a) ↑ : restricted to *'āmmiyyat al-muthaqqafīn*

b) ↓ : restricted to *'āmmiyyat al-ummiyyīn*

c) colon: current in (following phrases)

d) small elevated numeral: one of two or more homophones.

iii) *Variant headwords of roughly equal currency* are dealt with in the following ways:

a) Many entries that are short are repeated, e.g.:

لارنج *laring* /coll n/ Seville oranges. — also *naring.*

نارنج *naring* /coll n/ Seville oranges. — also *laring.*

b) In the case of the coexistence of assimilated and unassimilated forms taken to be of roughly equal currency, these are given as follows: اتسبّت *ʔitsabbit* or *ʔissabbit* . . . The verbal information run-on (see below) of such an entry gives only unassimilated forms, but this should not be taken to mean that assimilated forms are any less common.

iv) *Variant headwords of unequal currency*

Where phonetic variations are such that they lie within the frame of the Arabic-script headword, they are given in an order of priority which is intended to reflect notions of their relative currency, e.g., تركواز *turkuwaaz, tirkuwaaz, turukwaaz, tirikwaaz* . . . Less current variants which do not lie within the frame of the Arabic-script headword are given in parentheses in the entry of the more current form and cross-referenced from their own root, e.g., under the root ع ش ا ن, the entry reads عشان *ɛafaan* (also *ɛalafaan*) . . . and there is a cross-reference to the latter form from the root entry ع ل ش ا ن. Parentheses are also used when a headword may be used in conjunction with another word with no change of meaning, e.g., *zabaadi* (also *laban zabaadi*); in such cases no implication of relative currency is intended.

3. *Verbal information and run-on entries*

Entries dealing with verbs normally terminate with a listing of the verbal noun(s) and verbal adjectives or participles associated with that verb in Egyptian Arabic; the forms given are sometimes incongruous from the standpoint of literary Arabic. These items of verbal information do not thereafter qualify for treatment as separate entries unless they occur in set phrases requiring definition away from the verb entry or have nominal or adjectival functions in addition to their verbal functions. In a spirit of compromise, the term "inactive verbal adjective" (iva) has been employed in order to avoid the need to describe the participles of intrinsically passive derived forms of the verb as either active or passive — this being a moot point among exponents of Arabic grammar.

Idiomatic and phrasal run-on entries start on a new line preceded by ¶. Material is allocated to a run-on entry when it is in some way distinct from the main entry that it follows while yet being too closely linked with it in form to merit an independent entry. The most common examples of such material are verb-plus-preposition as a lexical unit, conjunctional phrases formed from preposition-plus-*ma*, and adverbial forms such as *ɛaadatan* and *ɛumuuman.*

4. *Etymologies*

With regard to material of an etymological character in this dictionary, more could have been done if a very great deal more time had been available for the task. In practice, however, the priorities of the documentation of Egyptian Arabic dictated adherence to modest goals in this complex area, by concentrating in the first place on pulling together the fairly exiguous relevant work available and then by adding such further points as became apparent. Entanglement in the toils of Semitic philology has not seemed appropriate, so that loanwords which have for long been resident in Arabic generally have only rarely been accorded etymons in Hebrew, Syriac etc. The focus has been rather on items borrowed specifically by Egypt and on loanwords more general in the various regional forms of Arabic but of recent arrival, and the main languages involved are therefore Coptic, Greek, Turkish, Italian, French and English. Two general works consulted in this connection were Rufā'īl Nakhla al-Yasū'ī, *Gharā'ib al-lahja al-miṣriyya* (Beirut, 1964) and Aḥmad 'Īsā, *al-Muḥkam fī uṣūl al-kalimāt al-'āmmiyya* (Cairo, 1938).[1]

[1]The reader is also referred to Erich Prokosch, *Osmanisches Wortgut im Ägyptisch-Arabischen* (Berlin, 1983), which appeared too late to be taken into account in this dictionary.

The task of dealing with survivals from Coptic is accompanied by particular complications, not only because of the antiquity of that language and the shortage of published studies on its relation with Egyptian Arabic but also because Coptic terms varied in the different Coptic dialects and there are in any case difficulties in knowing how they were pronounced. For these reasons, and because too some of the likely etymons are recorded only in hieroglyphs, Coptic/Egyptian etymons have not been given. The identification ‹Copt›, it should be noted, includes those items attested only in hieroglyphs. In addition to Nakhla's book mentioned above, the following works have been consulted in this connection: Wilson B. Bishai, "The Coptic influence on Egyptian Arabic" (Johns Hopkins University Ph.D. dissertation, Baltimore, 1959); ibid. "Coptic lexical influence on Egyptian Arabic", *Journal of Near Eastern Studies* 23 (1964), pp.39-47; W.E. Crum, *A Coptic dictionary* (Oxford, 1939); George Sobhy, *Common words in the spoken Arabic of Egypt, of Greek and Coptic origin* (Cairo, 1950); and Wilyam Naẓīr, *al-'Ādāt al-miṣriyya bayna 'l-ams wa-'l-yawm* (Cairo, 1967).

As might be expected, there has in some cases been considerable difficulty in deciding whether a loanword was borrowed directly from its putative language of origin or came via another language. This is particularly so with items of Persian origin, some of which seem likely to have come via Turkish, others via Arabic and yet others directly. The same problem arises with a number of Greek and Italian terms, which may have arrived either directly or via Turkish. In general, an etymon is given in its form in the language of origin, unless some change in the pronunciation or meaning suggests a route via Turkish; in this latter case, the Turkish etymon is given, accompanied by a note "from P", "from It" etc. to indicate that the item is not Turkish by origin. In the case of items that can be traced to terms common to two or more European languages, attempts have been made on the basis of pronunciation and any other available clues to specify the probable source language. Items of general European origin have been left without etymological information.

Etymological information is given between angle brackets and the following abbreviations are used: Copt(ic), Engl(ish), Fr(ench), Gr(eek), Heb(rew), It(alian), P(ersian), Sp(anish), Syr(iac), T(urkish). In cases of decided uncertainty, information is given with the qualifications "perh", "poss", or "prob". For reasons already indicated, Coptic, Syriac and Hebrew etymons are omitted, and this has also been done where the etymon is identical or almost identical with the definition. On rare occasions, the original sense of the etymon has been given when this has been thought to shed light on the entry.

For Turkish, the following works have been consulted: *New Redhouse Turkish-English dictionary* (Istanbul, 1968); J.W. Redhouse, *A Turkish and English lexicon* (new impression, Constantinople, 1921); H. Kahane *et al.*, *The lingua franca in the Levant: Turkish nautical terms of Italian and Greek origin* (Urbana, 1958); and Julius Zenker, *Türkisch-arabisch-persisches Handwörterbuch* (Leipzig, 1866). *New Redhouse* spellings have been followed except in the case of the Constantinople *h* for *kh*, where *ḫ* has been used to indicate the guttural which must have existed in the forms taken over by Egyptians. For Persian, reference has been made to Zenker and to F. Steingass, *A comprehensive Persian-English dictionary* (London, 1892), and Steingass' system of transliteration has been followed with the exception of rendering as *m* his *ṃ* which represents the Persian *n* when pronounced as *m* before *b*. For Greek, use has been made of Liddell and Scott and of Charis Patsis, *Lexico ellêno-angliko* (Athens, 1967); the *Random House dictionary* system of transliteration of Greek has been followed except for *eta, xi, upsilon, chi* and *omega*, which have been rendered as *ê, ks, u, kh* and *ô* respectively. For Italian, the Reynolds' and Cassell's dictionaries have been used; for Spanish, Cassell's; and for French, Harrap's.

5. *Grammatical information*

Grammatical information, in the form of part-of-speech labels and certain other indications of grammatical properties, is given between obliques. The following abbreviations are used:

absol	absolute	imper	imperative imperatival	pl n	plural form noun
adj	adjective, adjectival	imperf	imperfect	prep	preposition, prepositional
art	article	indef	indefinite	pron	pronoun,

adv	adverb, adverbial	inst n	instance noun		pronominal
		interrog	interrogative	prop	proper
ava	active verbal adjective	interj	interjection	pva	passive verbal adjective
coll	collective	invar	invariable		
				rel	relative
conj	conjunction, conjunctional	iva	inactive verbal adjective	sing	singular
constr	construct	masc	masculine	suff	suffix
correl	correlative	n	noun	unit n	unit noun
def	definite	neg	negative, negation	usu	usually
demonst	demonstrative			v	verb
		num	numeral		
el	elative			vi	intransitive verb
		part	particle		
emph	emphatic			vn	verbal noun
		perf	perfect		
esp	especially			vt	transitive verb
		pers	person, personal		
fem	feminine			w	with
		pl	plural		
foll	following				

The following points may be noticed:

i) Singular nouns ending in *a* or *a* in the transcription and in ة in the Arabic script are to be treated as feminine unless the definition specifically indicates otherwise (e.g., *xaliifa*). Other feminine nouns are labelled as such.

ii) Where no plural is given, none is thought to exist. An asterisk in the grammatical information indicates the plural ending *-iin* (*-yyiin* if the singular ends with *i*). Efforts have been made to rank plurals in order of frequency of occurrence; where different forms seem to be equally common, the */-aat* or *-aat/-yya* forms have been given first.

iii) Verbs which retain the same sense whether or not there is a following preposition have been labelled /vt and vi/.

iv) The bold dash is used within the body of an entry to introduce grammatical information applicable to what follows.

6. *Special language indicators*

Special language indicators, which are given in brackets, are used to point out restrictions peculiar to specific terms. Such restrictions may relate to subject areas and occupations, a particular connotation, a social group, or a limitation on currency. The following indicators are used:

abus(ive)	*derog*(atory)	*mus*(ic)
acad(eme)	*dipl*(omacy)	*naut*(ical)
admin(istration)	*educ*(ation)	*nav*(al)
agric(ulture)	*elec*(tricity)	*non-Cairene*
anat(omy)	*eng*(ineering)	*needlew*(ork)
arch(itecture)	*euphem*(istic)	*obsol*(ete, obsolescent)
art	*fig*(urative)	*path*(ology)
astrol(ogy)	*finan*(ce)	*phot*(ography)
astron(omy)	*frozen contexts*	*phys*(ics)
athl(etics)	*geog*(raphy)	*plumb*(ing)
auto(mobiles)	*geol*(ogy)	*poet*(ical)
bank(ing)	*geom*(etry)	*pol*(itics, political)

beggars
biol(ogy)
bot(any)
broadc(asting)
butcher(ing)
callig(raphy)
carp(entry)
chem(istry)
chess
children
Chr(istian, Christianity)
cin(ema)
coarse
comm(erce)
communic(ations)
constr(uction)
cook(ery)
Copt(ic)
dent(istry)
deris(ive)
gram(mar)
gym(nastics)
hist(ory, historical)
hort(iculture)
iron(ic)
Isl(am, Islamic)
Isl(amic) *law*
joc(ular)
journ(alism)
Jud(aism)
leg(al practice)
ling(uistics)
lit(erature)
magic
math(ematics)
mech(anics)
med(ical practice)
metal(lurgy)
mil(itary affairs)
min(eralogy)
police
pottery
print(ing)
prov(erb, proverbial)
psych(ology)
rur(al)
sarc(astic)
slang
soccer
sport
surg(ery)
trad(itional) *soc*(iety)
techn(ology)
text(iles)
theat(re)
theol(ogy)
vendor's cry
vet(erinary science)
women
zool(ogy)

7. *Definitions and examples*

Definitions are given in British English, but the *Random House dictionary* has been referred to consistently in an attempt to avoid anglicisms unintelligible or misleading to those familiar only with American English. Most of the definitions are translational, with some additional "ostensive" definitions provided by the illustrations. However, analytical definitions have recommended themselves as less cumbersome for many instance nouns and for intrinsically passive derived forms of verbs themselves intransitive; in addition, analytical definition has been preferred in respect of most function words, on the ground that their complexities of usage can be summed up more readily in this way than through translational renderings which would fairly consistently fail to cover the semantic ranges involved. Senses and sub-senses are numbered off. Wherever possible, verbs have been defined in isolation from prepositions with which they may normally occur and the examples then show prepositional usages.

Illustrative contextual examples are provided for all entries except those where the meaning is so restricted or specialized that such examples would merely smack of tedious pedantry. Such emphasis on examples is, of course, consistent with the usual lexicographical practice of citation and has the advantage of capturing some of the flavour of Egyptian life. As might be expected in formulaic areas of expression such as blessing, cursing, greeting and invitation, the gap between Egyptian Arabic and English is at its greatest, with resultant difficulties in finding renderings which convey adequately all the spontaneity and conviction of the original. The collection of idiomatic usages in general has been a priority and these are to be found listed among non-transparent items given after double bars in the entries.

8. *Transcription*

The system of phonetic transcription used here follows in most respects that adopted by T.F. Mitchell in *An introduction to Egyptian colloquial Arabic* (London, 1956, repr. 1978). The main departures from that system concern certain vocalic renderings: a distinction is made here between a front *a* and a back *a*, and anaptyxis is shown wherever it occurs (rather than simply within composite morphological forms). Stress is not marked except where it constitutes an exception according to the rules elaborated by Mitchell; nor is stress shown in quasi-literary patterns such as *gaamiɛi*. Thirty consonant symbols and six vowel symbols are used, the consonant symbols being listed here with their Arabic-script counterparts in the order of the Arabic alphabet, according to which the dictionary is arranged (subject to the modifications mentioned above in section 1).

i) *Consonants*

ʔ	ء	z	ز (also ذ)	*f/v*	ف
b	ب	*s*	س (also ث)	*q/ɋ*	ق
t	ت (also ث)	*ʃ*	ش	*k*	ك
θ	ث	*ṣ*	ص	*l*	ل
g/j	ج	*ḍ*	ض (also ظ)	*m*	م
ḥ	ح	*ṭ*	ط	*n*	ن
x	خ	*ẓ*	ظ (also ض)	*h*	ه
d	د (also ذ)	*ɛ*	ع	*w*	و
r	ر	*ɣ*	غ	*y*	ى

ii) *Vowels*

The six vowel symbols used are:

a (fatḥa muraqqaqa) low/open and front
a (fatḥa mufakhkhama) low/open and back
i (kasra khāliṣa) high/close and front
e (kasra mumāla) middle/half-close and front
u (ḍamma khāliṣa) high/close and back
o (ḍamma mumāla) middle/half-close and back

These vowel symbols are doubled to indicate length, the Arabic-script counterparts of the pairs *aa/aa, ii/ee* and *uu/oo* being ا, ى and و respectively.

Mastery of the exact phonetic value of each of the above symbols can of course be best achieved by practice with native speakers, but for descriptions of these values the user is referred to any of the grammars already mentioned. The following points, however, require special mention here:

i) *ɋ/q and* ʔ

The ق of literary Arabic is associated with two distinct sounds in Egyptian Arabic. The first of these (symbolized by *ɋ*) is of more widespread occurrence and is similar to the glottal stop (ʔ). The second (symbolized by *q*) is similar to its counterpart in literary pronunciation and occurs commonly only in *'āmmiyyat al-muthaqqafīn*. One good reason for distinguishing between ʔ and *ɋ* is that the former may elide while the latter never elides. Compare, for example, *ɣilit fi-sm-i* (or *fi-ʔism-i*) (he made a mistake in my name) with *ɣilit fi-ɋism-i* (he made a mistake in my share).

ii) *Doubled consonants*

Doubling of a consonant symbol in the transcription corresponds to the *shadda* of Arabic orthography. A doubled consonant is pronounced with twice the length of its single counterpart.

iii) *a-a/aa-aa*

The distinction made here is between the open vowel *a* made with the front of the tongue (rather like the English *a* in *hat*) and the open vowel *a* made with the back of the tongue (rather like the English vowel in the word *calm*) — cf. Egyptian Arabic *barr* (to pamper) with *barr* (to fulfil (a promise)). The long vowels *aa* and *aa* may be regarded as having double the duration of *a* and *a* respectively, e.g., *nabat* (to sprout) and *nabaat* (plant), *ṭab* (all right then!) and *ṭaab* (to recover).

iv) *i-e/ii-ee*

These two vowels are produced with the front of the tongue. The closer of them, *i*, is similar to the vowel in the English *pin* (e.g., *silim*), while for *e* the mouth is slightly more open and the vowel is roughly halfway between the vowels in English *pin* and *pen;* the vowel *e* occurs usually as a contraction of *ee* in a closed syllable (e.g., *get-na*). The long vowels *ii* and *ee* may be regarded as having double the duration of *i* and *e* respectively, e.g., *ɛeef* (bread) and *ɛef-na* (our bread), *ɛiifa* (livelihood) and *ɛifa* (evening prayer).

v) *u-o/uu-oo*

These two vowels are produced with the back of the tongue and the relation between them is analogous to the relation between *i* and *e*. The closer vowel, *u*, is similar to the vowel in English *put*, while for *o* the mouth is slightly

more open; the vowel *o* occurs usually as a contracted form of *oo* in a closed syllable (e.g., *yom-na*). The long vowels *uu* and *oo* may be regarded as having double the duration of *u* and *o* respectively, e.g., *door* (round (in a game etc.)) and *dor-na* (our round), *duur* (go around!) and *durr* (pearls).

vi) *Anaptyxis*

Unstressed anaptyctic vowels are represented in small elevated form, while stressed anaptyctic vowels are given in the normal fount.

9. *Hyphenation*

The system of hyphenation employed in the transcribed Arabic is intended to serve as an aid and does not constitute an attempt to lay down orthographic rules. Its purpose is to indicate the main features of the morphological structure of composite forms and it is accordingly used with bound morphemes and monosyllabic particles, and in instances of elision, anaptyxis and linkage involving stress. Certain exceptions have been made, however, in order to prevent the amount of hyphenation from becoming excessive.

i) *Bound morphemes:* e.g., *darab-ni, walad-i. Exceptions* are: a) person markers used in the conjugation of the verb (e.g., *katabt* rather than *katab-t, yiktib* rather than *yi-ktib*), and b) suffixed pronominal morphemes when bound with prepositions or conjunctions (e.g., *bikum, ʕaleek, ʔinnik, ʔikminnu*). It may be noted that the third person singular masculine suffix after a vowel takes the form of incremental length with concomitant stress (e.g., *ʃafuu* they saw him, *maʕaa* with him).

ii) *Prefixed and suffixed monosyllabic particles:* the definite article (*ʔil-beet*), the time markers *ḥa-* and *bi-* (*ḥa-yiktib*), the conjunctions *wi-* and *fa-* (*wi-ḍarab-ni*), the negative particles *ma-* and *-ʃ* (*ma-katab-ʃ*), and the prepositions *li-, bi-, ʕa-* and *mi-* (*li-beet-u*). *Exceptions:* hyphenation is not used when a monosyllabic particle is followed by a definite article or by a pronominal suffix (hence *fil-beet* rather than *fi-l-beet,* and *bikum* etc. as above); nor is hyphenation used before the conjunctive quasi-suffix (as in *saaʕit ma, baʕdi ma*), both because other form-classes may here be interpolated and because linkage here would imply erroneous stress.

iii) *Elision, anaptyxis and linkage involving stress:* an example of hyphenation in elision involving stress occurs in the initial composite form of the phrase *huwwa-na lli ʕamalt-u*; where an anaptyctic vowel is stressed, it is preceded by a hyphen and followed by a hyphen, but hyphenation is not used to isolate unstressed anaptyctic vowels; the term linkage here relates to the enclitic use, affecting stress, of such potential free-form units as *lak* and *di,* as in *ʔil-lelaa-di* (cf. *ʔil-leela di*) and *katabu-ha-lna* (cf. *katabuu-ha lina*).

ء ا

ء ا see ء ا ه: ʔaa

ء ا ب
آب ʔaab /n/ *[Chr]* Father (epithet of God). *bi-sm il-ʔaab* in the name of the Father.

ء ا ب ا
آبا ʔaaba <ϱerh Copt> /n; always used vocatively/ *[trad soc]* father. *ʔinta waɦaʃt-i-ni y-aaba* I missed you, Daddy. *ʔaaba l-ʔakl*^{i} *ʔahu* here's the food, Pop.

ء ا د
آد ʔaad, ʔaad <poss related to Copt> /n; always used vocatively/ boy. *xud y-aad* come here, boy. - also *waad*.

ء ا د م
آدم ʔaadam /prop n/ Adam.
¶ *bani ʔaadam* /fem *bani ʔadma*, pl *bani ʔadmiin*/ **1** /n/ person, human being. *laazim il-bani ʔaadam yikuun ʕandu ṣabr* one must be patient. *ya bani ʔaadam [derog]* ≈ you brute, thickhead! **2** /adj/ considerate, polished, refined. *di sitt*^{i} *bani ʔadma* or *sitt*^{i} *bani ʔaadam* this is a very nice lady.
آدمى ʔaadami /adj */ human. *ʔiṭ-ṭabiiʕa l-ʔaadamiyya* human nature.
آدميّة ʔaadamiyya /n/ humanity, human feeling.

ء ا د ى
آدى ʔaadi <Copt> /w pron suff ʔadii-/ demonstrative drawing attention to a following pronoun or noun (cf Fr *voici, voilà*). *ʔadii-ni geet* here I am! *ʔaadi gneeh* here's a pound. *ʔaadi nuṣṣ*^{i} *saaʕa tanya faatit* there's another half hour gone! *wi-ʔaadi ʔaxrit-ha* and now look how it's turned out. *ʔaadi furt-ak il-mihabbiba* so much for your lousy advice, this is where your lousy advice has got me!

ء ا س ^{1}
آس ʔaas^{1} /coll n/ myrtle.
آسة ʔaasa /unit n, pl *-aat*/ a myrtle bush.

ء ا س ^{2}
آس ʔaas^{2} <Fr *as*> /n pl *-aat*/ ace (in cards).

ء ا ف
آفة ʔaafa /n pl *-aat*/ blight, disease (on a plant). - /adjectivally/ *raagil ʔaafa* a pest of a man. ‖*ṣaɦn*^{i} *kunaafa w-gambii ʔaafa [prov]* description of anything fine which is marred by an accompanying fault or blemish.

ء ا ل ^{1}
آلة ʔaala /n pl *-aat*/ **1** tool, instrument. *ʔil-ʔalaat id-daqiiqa* precision tools. *ʔitqatal bi-ʔaala ɦadda* he was murdered with a sharp instrument. **2** machine. *ʕaṣr il-ʔaala* the machine age. ‖ *ʔaala katba* typewriter. **3** musical instrument. *ʔalaat niɦasiyya* brass instruments. *ʔalaat il-qarʕ* percussion instruments. *ʔalaat in-nafx il-xafabiyya* woodwinds. **4** *[euphem]* penis. **5** stopgap. *ʔana gayb-u mʕaaya ʔaala kida wis-salaam* I've brought him with me just for the sake of appearances.
آلى ʔaali /adj/ **1** mechanical. *ʔinsaan ʔaali* robot. *gamʕ*^{i} *ʔaali [print]* machine setting. **2** automatic. *nuṣṣ*^{i} *ʔaali* semi-automatic. **3** *[mus]* instrumental.
آلاتى ʔalaati **1** /n pl *-yya*/ low-class musician or singer. **2** /adj */ raffish.

ء ا ل ^{2}
آل ʔaal^{1} /n always in constr/ lineage, line, stock. *ʔaal in-nabi* (or *ʔaal il-beet*) the line of the Prophet. ‖ *ʔaal ʃaddaad* hashish-smokers.

ءال[3]
آل ʕaal[2] <Copt> /n/ **1** jacks, five-stones (children's game). **2** /pl ʔilaan/ a single jack-stone, five-stone.

ءامين see ءمن: ʕaamiin, ʕamiin

ءان see ءون: ʕaan

ءانى
آنى ʕaani *[non-Cairene]* personal pronoun of the 1st person singular. ‖ *ʕaah y-aani* ≈ oh me, misery me!

ءاه
آه ʕaah (also ʕaa) <Copt> /interj/ **1** yes, yes indeed, ah yes. *ʕaah ya beeh da-lli kaan bi-yiḥṣal* that's right, Sir, that's what used to happen. *ʔis-sittaat ʔiwwa ʕaah ʔiwwa* women are an effective force, yes indeed, an effective force. *ʕaah fihimt* ah yes, now I understand. **2** exclamation of pain, distress or regret. *ʕaah ya gamb-i* ouch, my side! ‖ *ʕaah minnak* ≈ you snake in the grass! See further under ءوه[2]

ءاهو
آهو ʕaahu exclamation implying indifference. *ʕagbaa-k il-waziifa g-gidiida* - ʕaahu 'Do you like the new position?' 'So-so.

(ءاى)
آية ʕaaya /n pl -aat/ **1** *[Isl]* miracle performed by God. ‖ *raagil ʕaaya (min il-ʕayaat* or *min ʕayaat rabb-i-na)* a marvellous man. - *(hiyya) ʕaaya fig-gamaal* (she is) the epitome of beauty. **2** verse of scripture. ‖ *ʕakas il-ʕaaya* to do something in a way opposite to that usually followed, reverse normal procedure.
آى ʕaay /interj/ exclamation of pain. - also ʕayy.

ءايس
آيس ʕaayis (also ʕaayis kiriim) <Engl> /n/ ice, ice cream.

ءءاه
آآه ʔaʔʔaah *[children]* **1** /n/ a spanking, a smacking. *baaba ʔiddaa-ni ʔaʔʔaah* Papa gave me a spanking. **2** (also ʔaʔʔah) exclamation discouraging a child from doing wrong ≈ you'll get a spanking!

ءءه see ءاءء: ʔaʔʔah

ءءع
إتع ʔiʔaʕ *[children]* interjection expressing desire to visit the lavatory.

ءباظ
أباظى ʕabaaẓi: ʕads' ʕabaaẓi lentils baked with chicken (a dish attributed to the Abaza family).

ءبانا see also ءبب
أبانا ʕabaana (also ʕabaana llazi) /n/ *[Chr]* Our Father, paternoster.

ءبب[1] see also ءبان ا
أبّ ʕabb /n, in constr ʕabu, w pron suff ʕabuu- (1st sing ʕabuu-ya)/ **1** /pl ʔabbahaat, ʕabaaʔi/ father, progenitor. *ʕabu l-walad* the boy's father. *waḥiid ʕabuu* an only son. ‖ *ʔilli yiʕraf ʕabuu-ya yʔul-lu* (who knows my father may tell him) I'll do as I like and damn what anyone says! - *maglis il-ʕabaaʔ* the Parent-Teacher Association. - *ʕabuu-k ma-hu ʕabuu-k wa-ʕaxuu-k ma-hu ʕaxuu-k* (your father is not your father and your brother is not your brother) ≈ everyone for himself. **2** /pl ʕabaaʔ only/ **2a** priest, father. *ʕabaaʔ ik-kiniisa* (1) the clergy. (2) the Church Fathers. *naadi ʕabb' mil-kahana* call one of the priests. ‖ *ʕabb iʕtiraaf* the priest to whom one regularly makes confession. - *ʔil-ʕabaaʔ il-biiḳ* the White Fathers, the Carmelites. **2b** /with 1st person pl suff/ *[Chr]* title of, and form of address or reference to, a priest or monk. *ʕabuu-na girgis* Father Girgis. *miin ʕabuu-na lli guwwa da* who is that priest who is inside? **3** *ʕabuu-ya* informal mode of address to (1) an older man ≈ Dad. (2) any man ≈ mate, pal. – /always in constr ʕabu/ **4** stem, source, origin. *burtuʔaan mistiwi ʕala ʕabuu* oranges which ripened on the tree. *gibt il-xabar min ʕabuu* I got it from the horse's mouth. *ʔil-ʔusṭuwaana di ʕabuu-ha feen* where is the master copy of this record? ‖ *wi-ʕabuu* to an extreme degree, par excellence, as in *dawʃa w-ʕabuu-ha* one hell of a racket. **5** /w masc n as referent, and w foll n (pl ʔummaat, ʔummaat q.v. under ʔumm 3)/ **5a** the one with .... the one having .... *ʔil-walad ʕabu naḍḍaara* the boy wearing glasses. *ʔir-raagil ʕabu ʕneen zurʔ* the man with the blue eyes. *ʔik-kursi ʕabu talat rigleen* the three-legged chair. **5b** the one costing .... *huwwa da d-dulaab ʕabu miit ginneh* is that the hundred-pound wardrobe?
¶ *ʕabu* /in constr/ (1) used with the name of a man's eldest son, or, if he has no sons, his eldest daughter, or, if he has no children, his father, as a respectful and slightly affectionate substitute for his own name. (2) used in some nicknames corresponding to certain given names, e.g., *ʕabu ḥaggaag* for *yuusif*, *ʕabu ḥanafi* for *maḥmuud*, *ʕabu xaliil* for *ʔibrahiim*, *ʕabu darwiiʃ* or

darf for *muṣṭafa, ʕabu dawuud* for *silimaan, ʕabu ɛali* for *ḥasan.*

أبّا *ʕabban: ʕabban ɛan gidd* from generation to generation, from father to son.

أبوين *ʕabaween* /dual n/ (one's) parents. *waḥiid il-ʕabaween* an only child.

أبوى *ʕabawi* /adj */ paternal, fatherly.

أبوّة *ʕubuwwa* /n/ fatherhood.

ء ب ب [2]

أبّه، أبّا *ʕubba, ʕabbah [children]* interjection accompanying actions of climbing and lifting ≈ hup! *ʕeela ʕubba* see *ʕeela.* - also *hubba.*

أبّ *ʕubb: ʕeela ʕubb* see *ʕeela.*

ء ب ب ه

أبّهة *ʕubbaha* /n/ sumptuousness, elegance (of appearance). *dool gamaaɛa ʕaaxir ʕubbaha* those are extremely chic people. - /adjectivally/ *waad ʕubbaha* an elegant youth. *villa ʕubbaha* a sumptuous villa.

ء ب ج د

أبجد *ʕabgad: ʕabgad hawwaz* /n/ ABC (the first letters of the alphabet). *da lissa f-ʕabgad hawwaz* he is just a beginner.

أبجدى *ʕabgadi* /adj */ alphabetical. ‖*raagil ʕabgadi* a man who works by the book.

أبجديّة *ʕabgadiyya* /n pl *-aat*/ alphabet.

ء ب ج و ر

أباجورة *ʕabajuura, ʕabajoora* <Fr *abat-jour*> /n pl *-aat*/ table lamp, standard lamp.

ء ب د

أبد *ʕabad: lil-ʕabad* or *ʕila l-ʕabad* /adv/ forever. *huwwa-ḥna ḥa-nɛiif lil-ʕabad* are we to live forever? ¶ *ʕabadan* **1** /adv always w neg/ ever, at all. *miʃ bi-tgii-li ʕabadan* you never come and see me. *ma-yṣaḥḥ-ʃ kida ʕabadan* this isn't at all the right thing to do. *b-akallim-ak wala-nta saamiɛ ʕabadan* I'm talking to you and you're not listening at all. **2** exclamation of emphatic denial ≈ never! certainly not! not at all! nothing at all! *fikr-ik siktu ɛalayya* - *ʕabadan* do you imagine that they let me be? no way! *ɑal-laha taɛbaana* - *ɑalit-lu ʕabadan* he asked her, 'Tired?' She told him, 'Not at all!' *maa-lak ya ʕabu sayyid.* - *ʕabadan ya bamba ma-fii-ʃ* 'What's wrong, Abu Sayyid?' 'Nothing at all, Bamba.'

أبدى *ʕabadi* /adj/ everlasting, eternal. *ʕil-ḥayaah il-ʕabadiyya* eternal life.

تأبيدة *taʕbiida* /n/ life sentence, life imprisonment. *ʕaruuḥ fiikum taʕbiida* I'll get you even if I go to prison for life for it! I'll kill you!

مؤبّد *muʕabbad* /adj/ for life (of a prison sentence). *ʕitḥakam ɛalee bi-sign[i] muʕabbad* he was sentenced to life imprisonment. - /elliptically/ *xad muʕabbad* or *ʕitḥakam ɛalee bil-muʕabbad* he was given a life sentence.

ء ب د ى -

إيبوذياكن، إبوذياكون *ʕibudiyaakun* (also *ʕibuziyaakun*) <Gr *hupodiakonos*> /n */ *[Chr]* subdeacon.

إبوذياقون *ʕibudiyaaqun↑* = *ʕibudiyaakun.*

ء ب ذ ى - see ء ب د ى -

ء ب ر [1]

إبرة *ʕibra* /n pl *ʕibar*/ **1** needle. *ʕibra ɛooga* a curved needle. *ʕibar tirikuuh* knitting-needles. *ʕibrit buṣla* compass-needle. *ʕibrit babuur* needle for cleaning the jet of a primus stove. ‖ *ʕibrit il-ɛaguuz* nettles. - *ʕibrit ʕaadam [bot]* yucca. - *beet il-ʕibra* compass. **2** hypodermic needle, (and hence) injection. *ʕid-duktuur katab-li talat ʕibar* the doctor prescribed me three injections. ‖ *bi-yiddi ʕibar* (1) he gives injections. (2) he plays dirty tricks. **3** sting of a scorpion or a bee.

ميبر *meebar* /n pl *mayaabir*/ large needle, sail-needle.

ء ب ر [2]

أوبرا *ʕubra, ʕupiraʃ* <It> /n pl *-aat*/ **1** opera. **2** *ʕil-ʕubra* site, in central Cairo, of the former Opera House. *midaan il ʕubra* Opera Square.

ء ب ر ت ت

أوبريت *ʕubritt, ʕubreet* <Fr *opérette*> /n pl *-aat*/ **1** operetta. **2** musical comedy (film).

ء ب ر ت -

أبرتيف *ʕabratiif, ʕabritiif* <Fr *apéritif*> /n/ appetizer.

ء ب ر س -

أبروسفارين *ʕabrusfariin* <cf Gr *prospherein*> /n/ *[Chr]* cloth with which the offertory is covered on an altar. - also *burusfariin.*

ء ب ر ش ى

أبرشيّة *ʕabrafiyya, ʕabrufiyya, ʕibarfiyya* <Gr *eparkhia*> /n pl *-aat*/ *[Chr]* diocese.

ء ب ر ك
أباركة *ʔabarka* <Gr *aparkhê*> /n/ a sweet red wine (used particularly as communion wine).

ء ب ر ك –
الإبركسيس *ʔil-ʔibraksiis* <Gr *prakseis*> /n/ *[Chr]* the book of Acts of the Apostles.

ء ب ر ه –
الإبرهيميّة *ʔil-ʔibrahimiyya* /prop n/ Sufi order named after Sidi Ibrahim ed-Disuqi.

ء ب ر ي ت see ء ب ر ت ت: *ʔubreet*

ء ب ر ي ق
أبريق *ʔabriiq* /n pl *ʔabariiq/* metal or earthenware ewer with a spout (see Pl.A, 2). *ʔabriiq ʃaay* teapot.

ء ب ر ي ل
أبريل *ʔabriil, ʔibriil* /n/ April. *kidbit ʔabriil* April fool.

ء ب ر ي م
أبريم *ʔabriim* /prop n/ Ibrim, a site in Nubia.
أبريمى *ʔabriimi* /adj/ from Ibrim in Nubia. *balaḫ ʔabriimi* a variety of high quality date, usually sold dry.

ء ب ز ي م
أبزيم *ʔabziim* /n pl *-aat, ʔabaziim/* buckle. - also *ʔabziin*.

ء ب ز ي ن
أبزين *ʔabziin* /n pl *-aat, ʔabaziin/* buckle. - also *ʔabziim*.

ء ب ز ي – see ء ب د ي –: *ʔibuziyaakun*

ء ب س see ء ب ي س: *ʔabiis*

ء ب س ي ه
أبسيه *ʔabseeh* <Fr *abcès*> /n pl *-aat/ [path]* abscess.

(ء ب ص ل –
إبصاليّة *ʔibṣaliyya, ʔabṣaliyya, ʔibṣaaliya* <Gr *psalia*> /n pl *-aat/ [Chr]* hymn based on a passage from scripture.
إبصلموديّة *ʔibṣalmudiyya, ʔabṣalmudiyya, ʔibṣalmuziyya* <Gr *psalmodia*> /n/ *[Chr]* book of Coptic liturgical hymns.

ء ب ط
ابط *ʔibṭ* /n pl *ʔabaaṭ/* **1**↑ armpit. **2** *[bot]* base of a leaf on a plant. - also *baaṭ*.

ء ب ظ
أبّظ *ʔabbaẓ* **1** /vt/ to squeeze in the hand, fondle. *ʔabbaẓi l-ɛagiin ɛaʃaan yiṭra* squeeze the dough to make it soft. *ɛammuala tʃabbaẓ fi-xduud ɛayyil-ha* she is fondling her child's cheeks. **2** /vi/ to masturbate. - vn *taʃbiiẓ*; ava/pva *miʃabbaẓ*.
اتأبّظ *ʔitʃabbaẓ* /vi/ to be squeezed. - iva *mitʃabbaẓ*.

ء ب ع د see ب ع د: *ʔabɛadiyya*

ء ب غ ل –
أبغلمسيس *ʔabuɣalamsiis* <Gr *apokalypsis*> /n/ *[Chr]* Book of Revelation, Apocalypse. *leelit ʔabuɣalamsiis* the night of Holy Saturday, when the Book of Revelation is read.

ء ب ك ا ت –
أبوكاتو *ʔabukaatu* (also *ʔabukaadu*[1]) <It *avvocato*> /n pl *ʔabukatiyya, ʔabukadiyya/* lawyer, advocate. - also *ʔavukaatu, ʔavukaadu*.

ء ب ك ا د [1]
أبوكادو *ʔabukaadu*[2] <Sp> /coll n/ avocado tree(s), avocado pear(s). - also *avukaadu*.
أبوكادوهاية *ʔabukaduhaaya* /unit n, pl *-aat/* an avocado pear. - also *ʔavukaduhaaya*.

ء ب ك ا د [2] see ء ب ك ا ت: *ʔabukaadu*[1]

ء ب ل
أبلة *ʔabla* <T *abla* older sister> /n pl *-waat, ʔablaat, ʔablahaat/* title of, and respectful form of address or reference to, an older woman, applied in particular by children to a schoolteacher ≈ Miss.

ء ب ل ت –
أبلاتين *ʔablatiin* <Fr *platine*> /n/ **1** platinum. **2** /coll n/ *[auto]* contact breaker(s).
أبلاتينة *ʔablatiina* /n pl *-aat/ [auto]* contact breaker. - also *bilatiina*.

ء ب ل ي س see ء ب ل س: *ʔibliis, ʔabliis*

ء ب ل س –
أبلاسيه *ʔablaseeh* <Fr *placier*> /n pl *-aat/* **1** sales representative. **2** cinema usher. - also *balaseeh*.

ء ب ل ك see ء ب ل ى ك: ʃabliik, ʃabliika

ء ب ل ك –
أبلاكاش ʃablakaaʃ <perh Fr placage> /n/ plywood.

ء ب ل ى ز
أبليز ʃabliiz, ʃibliiẓ /n/ alluvial deposit of the Nile. - /adjectivally/ ṭiin ʃabliiz soft mud.

ء ب ل ى س
إبليس ʃibliis, ʃabliis /n pl ʃabalsa/ devil, demon, specifically Satan. ʃibn il-ʃabalsa the sly devil. ɛaʃam ibliis fig-ganna [prov] (Satan's hope of Paradise) a total impossibility.

ء ب ل ى ك
أبليك ʃabliik <Fr applique> /n pl -aat, ʃabaliik/ **1** wall-lamp, bracket-light. **2** ornamental wall-relief.
أبليكة ʃabliika /n pl -aat/ = ʃabliik.

ء ب ن [1]
ابن ʃibn /n pl ʃabnaaʃˀ (or more often ʃawlaad, q.v. under walad)/ **1** son. ʃiddi ʃibn-ak li-lli luu ʃawlaad [prov] (entrust your son to one who himself has children) give responsibility to those with experience. **2** ya-bn-i informal form of address to a boy or younger man ≈ son, my lad. **3** /always in constr/ one brought up in a specified place or social milieu. ʃibn ir-riif a countryman. ʃabnaaʃ il-qaahira Cairenes. ʃabnaaʃ ik-kiniisa regular church-goers. – for other phrases beginning with ʃibn (e.g., ʃibn[i] naas), look up the second component of the phrase. See further under ب ن ى [2]

ء ب ن [2]
أبّن ʃabbinˀ /vt/ to eulogize (a deceased person). ḥaflit taʃbiin memorial ceremony. - vn taʃbiin; ava miʃabbin.
اتأبّن ʃitʃabbinˀ /vi/ to be eulogized (at a commemorative ceremony or the like). - iva mitʃabbin.

ء ب ن [3]
أبنة ʃubna /n/ passive sodomy. ɛandu (or fii) daaʃ il-ʃubna he is a passive sodomite.
مأبون maʃbuun /n */ catamite, passive sodomite. ‖ya mara ya maʃbuuna you slut!

ء ب ن و س see ء ب ن و ز: ʃabanooz

ء ب ن و س
أبنوس ʃabanoos (also ʃabanooz) <Gr ebenos> /n/ ebony. ‖ɋalam ʃabanoos a fountain pen.

ء ب ن ى ه
أبونيه ʃabuneeh <Fr abonné> /n pl -aat/ season ticket.

ء ب ه see ء ب ب ه: ʃubbaha

ء ب ه ا م see ب ه م [2]

ء ب و see ء ب ب [1]: ʃabu, ʃabaween, ʃabawi, ʃubuwwa

ء ب و ا
أبوا ʃubwa <Fr hautbois> /n pl -aat/ oboe.

ء ب و ن ا see ء ب ب [1]: ʃabuu-na

ء ب ى
أبى ʃaba (a) /vt/ to refuse. dayman yiʃba n-naṣiiḥa he is always against being advised. - vn ʃibaaʃˀ; ava ʃaabi.
أبيّ ʃabiyyˀ /pl ʃubaa/ **1** /adj/ of great integrity. **2** /n/ person of integrity.
اتأبّى ʃitʃabba /vi/ to play hard-to-get, be reluctant. sayɋa d-dalaal wi-b-titʃabba ɛalee she coquettishly refuses him. - vn taʃabbiˀ; ava mitʃabbi.

ء ب ى ب
أبيب ʃabiib <Copt> /n/ Abib, the eleventh month of the Coptic year (early July to early August). ʃabiib ṭabbaax il-ɛinab wiz-zibiib [prov] Abib cooks the grapes and raisins (this being the time of the grape harvest). min yaakul il-muluxiyya f-ʃabiib yigiib li-baṭn-u ṭabiib [prov] he who eats Jew's mallow in Abib will (have to) bring a doctor for his stomach.

ء ب ى س
أبيس ʃabiis /prop n/ /n/ the Egyptian god Apis. ɛaamil zayy[i] ɛigl[i] ʃabiis (he looks like the Apis bull) ≈ he is very stocky.

ء ب ى ه
أبيه ʃabeeh, ʃabeeh <T ağabey> /n pl -aat, -aat/ elder brother.

ء ت ا ب ى
أتابى ʃataabi (also ʃataari) /w pron suff ʃatabii-, ʃatarii-/ demonstrative indicating the discovery of a reason or fact. ʃatabii-k ma-get-ʃ so that's why you didn't come! ruḥt aɋbaḍ wi-ʃataari l-filuus lissa ma-wiṣlit-ʃ I went to draw my salary and it turned out that the money hadn't arrived yet. (Cf ʃagrann)

ءتاري see ءتابي: *ʕataari*

ءتب see ءتابي: *ʕataabi*

ءتبيس
أوتوبيس *ʕutubiis* <Fr *autobus*> /n pl *-aat*/ bus. *ʕil-ʕutubiis in-nahri* the (Nile) river bus.

ءتر[1] see ءتابي: *ʕataari*

ءتر[2] see ءسر[3]: *ʕatar*

ءتر[3] see ءتيـر: *ʕiteer, ʕuteer*

ءترابل
إترابل *ʕitrabil* /n/ *[naut]* keel.

ءترب-
أتربيل *ʕutrubiil*↓ <Fr *automobile*> /n pl *-aat*/ car. - also *ʕutrumbiil, ʕutumbiil*.

ءترم-
أترمبيل *ʕutrumbiil*↓ (also *turumbiil*) <Fr *automobile*> /n pl *-aat*/ **1** car. **2** *ʕutrumbiil (ḥart)* tractor, especially with plough attached. - also *ʕutrubiil, ʕutumbiil*.

ءترنج
أترنج، أطرنج *ʕutrung* /coll n/ *[bot]* Adam's apple(s) (Citrus medica var. cedrata). - also *turung*.

ءتس ت-
أوتوستوبّ *ʕutustubb* <Fr *autostop*> /n/ hitch-hiking.

ءتفار
إتوفار *ʕitufaar* <Fr *étouffoir*> /n pl *-aat*/ **1** candle-snuffer. **2** damper-felt (of a piano key).

ءتفو
إتفوه *ʕitfuuh, ʕitfuww* onomatopoeia for the sound of spitting, indicating disgust. *ʕitfuuh (ʕaleek)* ≈ how disgusting (you are)! - also *tifuuh, tifuww*.

ءتقر-
أوتوقراطي *ʕutuqraaṭi* <perh Fr> **1** /n */ autocrat. **2** /adj */ autocratic.
أوتوقراطيّة *ʕutuqraaṭiyya*↑ /n/ autocracy.

ءتك
أتك *ʕatak* <T *etek*> /n/ tape along the lower edge of a long garment to save wear.

ءتكل-
أوتوكلاف *ʕutuklaaf* <perh Fr> /n pl *-aat*/ autoclave, strong vessel in which superheated steam under pressure is used for sterilizing or cooking.

ءتكيت
إتيكيت *ʕitikeet* <Fr> /n/ **1** (style of) etiquette. *da lil-gawaaz ʕandina ʕitikeet* marriage with us has a certain etiquette. **2** /pl *-aat*/ label, tag.

ءتل
أثل *ʕatl* /coll n/ tamarisk tree(s).
أثلة *ʕatla* /unit n, pl *-aat*/ a tamarisk tree.

ءتلي-
أتيليه *ʕatilyeeh, ʕatileeh* <Fr *atelier*> /n pl *-aat*/ studio, workshop.

ءتما- see ءتمت-: *ʕutumaatik*

ءتم see ي تم[2]

ءتمب-
أتمبيل *ʕutumbiil* or *ʕutumubiil* (also *tumbiil*) <Fr *automobile*> /n pl *-aat*/ **1** car. **2** *ʕutumbiil (ḥart)* tractor, especially with plough attached. - also *ʕutrubiil, ʕutrumbiil*.

ءتمت-
أتوماتك *ʕutumatik* (also *ʕutumaatik*) <Engl> /adj invar/ automatic.
أتوماتيك *ʕutumatiik* <Fr> /adj invar/ automatic.
أتوماتيكي *ʕutumatiiki* /adj/ automatic.

ءتمين
إتمين *ʕitamiin* <Fr *étamine*> /n/ soft evenly-woven material (especially that used as a base for cross-stitch embroidery).

ءتنا- see ءتني[2]: *ʕitnaafar*

ءتنين see ءتني[2]: *ʕitneen*

ءتهل-
إتهليصا *ʕithaliiṣa* <Copt> /interj/ run aground! (in the jargon of Nile boatmen).

ءتو
إتاوة *ʕitaawa, ʕataawa* /n pl *-aat*/ ransom money, protection money.

ء ت ي

أتى ʔata↑ *(i)* /vt/ to come to. *ʔiṣrif ma fil-geeb yiʔtii-k ma fil-ɤeeb [prov]* ≈ *carpe diem*, tomorrow will take care of itself. *kull[i] ʔaatin ɋariib [prov]* everything (destined) to come is (relatively) imminent. - ava *ʔaati*.

الآتي ʔil-ʔaati↑ /n/ the following. *ʔilli ḥaṣal il-ʔaati* what happened is this. *ka-l-ʔaati* as follows.

اتأتّى ʔitʔatta /vi/ to result. *ma-yitʔattaa-ʃ ɛannu ḥaaga* nothing will come of it. - ava *mitʔatti*.

آتى *ʔaata* /vt/ **1** to give, grant. *ʔataa rabb-i-na bi-lli nifs-u fii* God granted him all that he wished. **2** to afflict, curse. *ʔallaah yiʔatii-ha b-muṣiiba taxud-ha* may God afflict her with a fatal catastrophe! **3**↑ = *waata*. - ava *miʔaati*.

واتى *waata* (also *ʔaata*↑) **1** /vt/ to be favourable, be propitious. *ʔig-gaww[i] mwaati* the weather is favourable. **2** /vi/ to favour, make things easy for (s.o.). *ʔil-ḥaẓẓ[i] wataa-ni* fortune smiled on me. *ḥabibt-u mwatyaa* his girlfriend is exactly on his wavelength. - vn *miwatiyya, muwatiyya*; ava *miwaati*.

استأتى ʔistiʔatta↓ /vi/ to result. *wi-ʔeeh ḥa-yistiʔatta min ɛadam muwafɋit-u* and what will come of his disapproval? - ava *mistiʔatti*.

ء ت ي ر see also ء س ي ر

أتير، أتير *ʔiteer, ʔuteer* <Fr *éther*> /n pl *-aat*/ ether.

ء ث ث see ³ ء س س

ء ث ر see ³ ء س ر and ء ت ي ر and ء س ي ر

ء ث ل see ء ت ل

ء ث م see ² ء س م

ء ج ا ي

أجاي ʔugaay <Copt> /interj/ help! *ḥ-aɋɛud ʔaḍrab fiik li-ḥadd[i] ma tɋuul ʔugaay* I'll keep beating you until you call for help! - also *gaay*.

ء ج ب ¹

أجبيّة ʔagbiyya <Copt> /n pl *ʔagaabi*/ *[Chr]* book of the daily office, book of hours.

² ء ج ب see و ج ب: *ʔiigaab, ʔigaabi, ʔigabiyya*

ء ج ر

أجر ʔagr, ʔagr /n pl *ʔuguur*/ wage, pay, recompense. *ʔil-ʔagr[i] miʃ ɋadd il-maʃaɋɋa* the recompense isn't worth the hardship. ‖ *ʔil-ʔagr[a] ɛal-alla* ≈ God will reward (said in resignation to ingratitude). - *wil-ʔagr[a] ɛal-alla* set phrase used to boast of a reputation, as in *da-na l-miɛallim dabʃa wil-ʔagr[a] ɛal-alla* ≈ I'm Boss Dabsha, everyone knows me! - *ʔagr[i] w-ɛafya* (may you enjoy) recompense and (further) well-being (said to one recovered from illness). - *ɛaẓẓam allaahu ʔagr-ak* may God make your recompense great (an expression of condolence).

أجرة ʔugra /n pl *ʔuguur, ʔugar*/ **1** wage, pay. **2** rent. *ʔugrit il-ḥooḍ* dock dues. **3** fare. *ʔugrit it-taksi* the taxi fare. **4** (also *ɛarabiyya ʔugra*) taxi.

أجري ʔugari /n pl *-yya*/ day labourer.

إيجار ʔigaar /n pl *-aat*/ **1** lease. **2** rent.

إيجارة ʔigaara /n pl *-aat, ʔagaayir/ [rur]* document in which the conditions governing a lease of land are written.

أجير ʔagiir /n pl *ʔugara*/ hireling, hired worker. *ʔagiir bil-yomiyya* day labourer.

مأجور *maʔguur* /adj */ **1** hired, wage-earning. **2** bribed. **3** rewarded (by God) for pious deeds.

أجّر ʔaggar /vt/ **1** to lease, rent, hire. *ḥ-aʔaggar ʃaɋɋa w-ʔatgawwiz fiiha* I'm going to rent an apartment to start my married life in. *ʔaggart[a] ɛagala* I hired a bicycle. **2** to lease out, rent out. *raaḥ baani l-ɛimaara w-ʔaggar-ha kull-a-ha* he went and built the apartment building and rented it all out. - vn *taʔgiir*; ava/pva *miʔaggar*.

اتأجّر ʔitʔaggar **1** /vt/ to hire, let, rent, lease. **2** /vi/ to be hired, be rented, be leased. *mitʔaggar ɛala l-ɋatl* hired to kill. - ava/iva *mitʔaggar*.

آجر ʔaagir *[rur]* **1** /vt/ to share the reward of God's blessing with (o.a.). **2** /vi/ to work as a casual farmhand for a daily rate. - vn *miʔagra*; ava *miʔaagir*.

مؤاجر *muʔaagir* /n */ lessee, tenant.

اتآجر ʔitʔaagir /vi/ to earn a reward (from God). *yalla biina nitʔaagir fi-tarbiyyit il-bint il-yitiima di* let us get a reward (from God) by bringing up this orphan girl. - vn *miʔagra*; ava *mitʔaagir*.

استأجّر ʔistiʔaggar↓ /vt/ **1** to * employ, hire. *ʔistiʔaggar-lu kam raagil ɛaʃaan yigmaɛuu-lu l-maḥṣuul* he hired some men to gather the crop for him. **2** to rent. - ava *mistiʔaggar*↓.

مستأجر *mustaʔgir*↑ /n */ lessee, tenant.

ء ج ر ن

أجرنّ ʔagrann, ʔagrann demonstrative indicating the discovery of a reason or fact. *ʃiliɛ maʃruud.* - *ʔagrann-u kaan zaɛlaan lamma ʃuft-u* 'He was thrown out.' 'Now I understand why he was angry when I saw him.' *ʔistanneet-u fil-maktab wi-ʔagrann-u msaafir* I waited

for him at the office, but it became clear that he had gone away. *ʃil-qaṭr' ma-wiṣil-ʃ' ʃagrann il-maḥaṭṭa faḍya* the train hasn't arrived, which is why the station is empty. (Cf *ʃataabi, ʃataari*)

ءجرود see ج ر د: *ʃagruud, ʃagruudi*

ءجري ه
أجوريه *ʃajureeh* <Fr *ajouré*> /adj invar/ perforated. - also *ʃazureeh*.

ءجز [1] see also ج ز ء [1]
أجزة *ʃagza* /coll n/ chemicals.
أجزجي *ʃagzagi* /n pl *-yya*/ pharmacist.
أجزاخانة *ʃagzaxaana* /n pl *-aat*/ **1** pharmacy, chemist's shop. **2** first-aid box, medicine chest.

ءجز [2] see also ج و ز [1]
أجّز *ʃaggiz* /vi/ to take a holiday, take leave. - vn *taʃgiiz*; ava *miʃaggiz*.
استأجز *ʃistaʃgiz*↓ /vi/ to ask permission, take leave. - vn *ʃistiʃgaaz*; ava *mistaʃgiz*.

ءجل
أجل *ʃagl: l-agl, min ʃagl* /prep/ for the sake of. *l-agl' magd allaah [Chr]* for the sake of God's glory.
¶ *l-agl' ma* /conj/ so that.
أجل *ʃagal* /n/ **1** (destined time of) death. *ʃagal-u ḳarrab* the time when he must die drew near. *ʃizzaay maatit kida - ma-kanit-ʃ' ɛayyaana. - wi-maa-lu - ʃagal-ha kida* 'How come she died just like that? She wasn't sick.' 'So what? Her time was up.' ‖*gaab ʃagal-* to finish off, polish off, as in *ga ḳaɛad ɛas-sufra gaab ʃagal-ha* he went and sat down at the dinner table and polished off everything on it. **2**↑ (appointed) time. *ʃintaha ʃagal id-deen* the period granted for repayment is over. ‖*bil-ʃagal* on credit. - *ʃila ʃagal ɣeer musamma* to an unspecified point in the future, *sine die*.
آجل *ʃaagil* /adj/ delayed, postponed. *xalli l-miɛaad ʃaagil* let the appointment be postponed. - /adverbially/ *ɛaagil walla ʃaagil ḥa-ysaddid diyuun-u* sooner or later he will pay his debts.
أجّل *ʃaggil* /vt/ to postpone, delay. *ma-tʃaggil-ha l-yoom il-ḥadd* why don't you put it off till Sunday? - /the literary passive imperfect occurs/ *kull il-iltizamaat di tuʃaggal li-muusim iṣ-ṣeed* all these commitments are postponed until the hunting season. - vn *taʃgiil*; ava *miʃaggil;* pva *muʃaggil*.
اتأجّل *itʃaggil* /vi/ to be postponed, be delayed. - iva *mitʃaggil*.

ءجل س
أجلاسيه *ʃaglaseeh* <Fr *glacé*> /adj invar/ patent (of leather).

ءجن
أجنة *ʃagana* <perh Copt> /n pl *-aat, ʃagan*/ cold chisel.

ءجند
أجندة *ʃajinda* <perh It *agenda*> /n pl *-aat*/ **1** notebook. *ʃajindit il-ɛanawiin* address book. **2** diary. **3** *[comm]* list of promissory notes according to date due.

ءجنس
أجنس *ʃajans* <Fr *agence*> /n pl *-aat*/ car showroom, car-dealing agency.

ءجنط
أجنطة *ʃaganṭa* <It *agguanta*> /interj/ *[naut]* avast!

ءجوج
أجوج *ʃaguug: ʃaguug wi-maguug* troublesome people. *kaanu zaḥmiin iʃ-ʃaariɛ zayy' ʃaguug wi-maguug* they were overcrowding the street and causing trouble.

ءجور
أجور *ʃajuur* <Fr *ajour*> /n/ *[needlew]* open-work.

ءجيو
أجيو *ʃagyu* <It *aggio*> /n/ premium, interest (on a loan).

ءح
أح *ʃaḥḥ* exclamation expressing **1** reaction to extreme heat or cold ≈ ouch! **2** *[women]* pleasure during sexual intercourse.
أحّا *ʃaḥḥa [coarse]* exclamation of extreme disapproval. *ʃaḥḥa ya ɛumar [women]* ≈ fuck that!
أحّيه *ʃaḥḥeeh [women in trad soc]* exclamation of surprise ≈ my! (often used sarcastically in badinage). *ʃaḥḥeeh fuufi l-beet kibiir ʃizzaay* my! what a big house! *ʃaḥḥeeh ḥa-txuffi f-ɛibb-i walla ʃeeh* ≈ my, my! you think you can fool me?

ءحد see also وحد
أحد *ʃaḥad*↑ /n/ **1** one of. *ʃaḥad minna* one of us. *midd' ʃaḥad id-diraɛeen* stretch out one of your arms! **2** (also

yoom ʕaḥad) a Sunday. (*yoom*) *il-ʕaḥad* (this) Sunday. **3** *ʕil-ʕaḥad* the One (epithet of God).

آحاد *ʕaḥaad* /pl n/ **1** *[math]* ones, units. *xaanit il-ʕaḥaad* the units column. **2** jeweller's term for a one-piastre coin.

حداشر، أحد عشر *ḥidaaʃar* **1** /num pl *-aat*/ eleven. **2** *ʕil-ḥidaaʃar* /adj invar/ the eleventh.

ء ح ل ى ل see ح ل ى ل: *ʕiḥliil*

ء ح م

إحم *ʕiḥim* onomatopoeic for the clearing of the throat. *ʔaal ʕiḥim wi-xaʃʃ[i] fil-mawḍuuʕ* he said 'Ahem' and got down to business. ‖ *min ɣeer ʕiḥim wala dastuur* without so much as a by-your-leave.

ء ح ن ا

إحنا *ʕiḥna* /pers pron/ we. *ʕiḥna gayyiin* we're coming. -/used in emphasis of the pron suff *-na*/ *kallim-na ʕiḥna* we are the ones you should speak to! ‖ *dayman yiʔuul ʕiḥna wi-ḥna* he's always boasting.

ء خ see ء خ خ

ء خ ت

أخت *ʕuxt* /n pl *ʕixwaat*/ **1** (full or half-) sister. **2** polite form of address or reference to any woman. *ʕil-ʕuxt[a] ʕayza ḥaaga* ≈ does Madam want anything? *ya ʕuxt-i* a formal mode of address by a woman to a woman. ‖ *ya-xt-i* an informal mode of address by a woman to a woman. - *ya-xt-i ʕaleeha [women]* how cute she is! **3** sister (member of a Christian religious order). *ʕil-ʕuxt[i] maryim* Sister Mary. **4** male's female counterpart thought to exist in the spirit world (also called *ʔariina*). — /no pl, w fem n as referent/ **5a** twin of. *ʕandi jakitta ʕuxt illi ʕinta labis-ha* I have a jacket just like the one you're wearing. ‖ *ma-l-haa-ʃ ʕuxt* she (or it) is peerless, as in *ma-l-haa-ʃ ʕuxt[i] f-gamal-ha* she is of matchless beauty. **5b** equivalent or companion piece in a succession. *ɣannit talat waṣlaat kull[i] waḥda ʕaḥla min ʕuxt-a-ha* she sang three songs, each one better than the one before.

ء خ خ[1]

أخ *ʕaxx, ʕaxx[1]* /n, in constr *ʕaxu*, w pron suff *ʕaxuu-* (1st sing *ʕaxuu-ya*)/ **1** /pl *ʕixwaat*/ (full or half-) brother. -/in commercial contexts pl *ʕixwaan*/ *ʃirkit ʕali w-ʕumar ʕabd ir-raaziq ʕixwaan* the company of Ali and Omar (the sons of) Abd el-Raziq, Bros. **2** /pl *ʕixwa*/ polite form of address or reference to any man. *ʕil-ʕaxx[i] min feen* (1) where are you from, friend? (2) where is the gentleman from? ‖ *ya ʕax-i* or *ya-x-i* informal mode of address to a man ≈ mate, my friend. — /pl *ʕixwaan*/ **3** member of a Sufi brotherhood. **4** female's male counterpart thought to exist in the spirit world (also called *ʔariin*). — /no pl, w masc n as referent/ **5a** twin of. *ʕana ʕandi ʔamiiṣ ʕaxu lli ʕaleek* I have a shirt just like the one you've got on. **5b** equivalent or companion piece in a succession. *bana talat biyuut kull[i] beet ʕaḥsan min ʕaxuu* he built three houses, each better than the other.

¶ *ʕaxii-na* an abrupt and slightly offensive form of address or reference to a man. *ʕaxii-na da lli ʔaaʕid hinaak* ≈ that bloke sitting there.

إخوات *ʕixwaat* /pl n, masc and fem/ siblings. *ʕandi talat ʕixwaat wilaad wi-tneen banaat* I have three brothers and two sisters. ‖ *ya-xwaat-i↓ [women]* exclamation of surprise or exasperation. - *ʕin kuntum ʕixwaat itḥasbum [prov]* ≈ even if you are brothers and sisters, settle accounts (so as to remain on good terms).

إخوان *ʕixwaan* /pl n/ **1** brothers (as business partners). *ʃirkit ʕali w-ʕumar ʕabd ir-raaziq ʕixwaan* the company of Ali and Omar (the sons of) Abd el-Raziq, Bros. **2** brethren. ‖ *ʕil-ʕixwaan (il-muslimiin)* the Muslim Brothers. **3** friends, buddies. *ʕixwaan-ak fif-fuxl* your workmates. ‖ *ya-xwan-na* (1) ≈ hey, everybody! (2) exclamation of exasperation. **4** counterparts of human beings, thought to exist in the spirit world.

إخوانجى *ʕixwangi* /n pl *-yya*/ *[deris]* Muslim Brother.

أخوى *ʕaxawi* /adj */ fraternal, friendly. *di ḥaaga ʕaxawiyya* this is a matter between friends.

أخوّة *ʕuxuwwa* /n/ brotherhood, friendship.

ء خ خ[2].

أخ *ʕaxx[2]* /interj/ exclamation of exasperation.

إخ *ʕixx* /interj/ exclamation of disgust or repulsion ≈ ugh! - also *ʕixxiih*.

ء خ خ ي ه

إخيه *ʕixxiih* /interj/ exclamation of disgust ≈ ugh! shame! *ʕeen-i ʕii w-ʕaʔuul ʕixxiih* said of one who publicly denigrates what he secretly desires. - also *ʕixx*.

ء خ د

خد، أخذ، أخذ *xad, ʕaxad (yaaxud)* /vt/ **1** to take. *xad ik-kitaab bitaaʕ-u wi-miʃi* he took his book and went off. ‖ *xad bi-yadd* to assist, as in *xad bi-yadd-i f-waqt iz-zanqa* he helped me when I was in a tight spot. - *yaaxud wi-yiddi (fi-kalaam)* there is give-and-take (in

conversation) with him. - *ʃil-ʃaxd' wil-ɛaṭa* (1) give-and-take. (2) trade, business. **2** to take along with one. *ma-tinsaa-ʃ taaxud if-ʃanṭa* don't forget to take the bag. *xud-ni maɛaak* take me with you. ‖*rabb-i-na yaxd-u* may God take him off! may he die! - *ma-ḥadd'-ʃ waaxid minha ḥaaga [prov]* you can't take any of it with you (when you die). **3** to convey, transport. *ʃit-taks' xad-ni l-maḥaṭṭa* (or *lil-maḥaṭṭa*) the taxi took me to the station. **4** to administer to oneself. *xud id-dawa* take the medicine. *ḥ-aaxud duff* I'll have a shower. ‖*xad il-kaar* he learned the trade. **5** to require. *min hina li-skindiriyya b-yaaxud talat saɛaat* (the journey) from here to Alexandria takes three hours. *ʃil-laḥma ḥa-taaxud siwa ktiir* the meat will take a long time to cook. **6** to treat, deal with. *ma-taxud-ʃ il-masʃala gadd* don't take the matter seriously! ‖*xud-ni ɛala qadd[a] ɛaql-i* humour me! go along with me! **7** to choose and/or use (s.th. appropriate for a particular purpose). *bi-naaxud qumaaʃ xafiif ɛaʃaan il-biṭaana* we get lightweight material for the lining. *naaxud il-ʃutubiis* let's take the bus. **8** to undertake. *miin ḥa-yaaxud door il-baṭal* who will play the leading role? *xadit il-imtiḥaan* she sat for the examination. *laazim naaxud qaraar* we must make a decision. **9** to receive, obtain, gain. *ʃin-naggaar bi-yaaxud kaam ɛalaʃ-ʃuɣl' da* how much is the carpenter paid for this work? *xadt[a] ḥukm[a] ɛalee* I obtained judgement against him. *ʃin ʃa-lla taaxud id-dukturaah* I hope you get a doctorate. *laazim taaxud ʃizn* you must obtain permission. *ʃil-mutoor xad surɛit-u* the engine picked up speed. *la huwwa xad bil-yimiin wala bif-ʃimaal* he gained nothing whatsoever. **10** to marry. *ʃaxuu-k xad miin* whom did your brother marry? **11** to sustain, receive (s.th. imposed or inflicted), be affected by. *xad ḥukm' taani* he got a second sentence. *xadit bard* she caught a cold. *ḥa-taaxud ḍarbit ʃams* you'll get sunstroke. *ʃil-kartoon xad bitumiin* the cardboard was given a coat of bitumen. *ʃis-saqf' xad ruṭuuba* the ceiling became damp. *xad(-lu) ɛalameen* he got slapped a couple of times. *xadit (laha) kilmiteen fi-ɛaḍm-a-ha* she was subjected to harsh words. ‖*tiɛiif wi-taaxud ɣer-ha* may you live to take another knock (expression of light-hearted consolation after a minor misfortune). **12** to subject (s.o. or s.th.) to (s.th.) in a precipitate manner. *xad-ni kaffeen* he upped and slapped me a couple of times. *xud il-ḥeeṭa wiff* give the wall a quick coat of paint! *ḥa-taxud-ni muxalfa* are you going to slap a ticket on me? — /vi/ **13** to derive power, motion etc. *ʃiṭ-ṭambuur bi-yaaxud min il-mutoor* the drum derives its motion from the motor. - vn *ʃaxd, ʃaxadaan*; ava *waaxid*.

¶ *xud* <cf Copt> /fem *xudi*, pl *xudu*/ come here! - *xud ɛandak* /fem *xudi ɛandik*, pl *xudu ɛanduku*/ (1) take that! (2) wait! hold it! (3) ≈ you'd be amazed at how much (or how many), as in *wi-xud ɛandak ʃifi suwwaaḥ ʃingliiz wi-ʃamrikaan wi-ʃalmaan* you should have seen how many tourists there were, English, Americans and Germans! *wil-maṭara qaalit xud ɛandak* ≈ the rain came down in torrents. - *xud wi-haat* /adverbially/ *[soccer]* one-touch. - *xad fi-nafs-(u)* (1) to be conceited, as in *waxda qalam fi-nafs-a-ha* she is so conceited! (2) to be offended, as in *xad fi-nafs-u minni* I offended him. - *xad fi-wiff-(u)* to make a break for it, to take to one's heels. - *xad wi-dda* to exchange words, as in *mudir-na ɛaṣabi ma-b-tiqdar-ʃ' taaxud wi-tiddi maɛaa* our director is bad-tempered; you can't discuss things with him, *xud wi-ddi maɛaa ɛala baal il-buliiṣ ma yiigi* keep him talking until the police come. - *xad ɛala* (1) to get used to, take to, as in *ʃiḥna waxdiin ɛala kida* we've got used to this state of affairs. (2) to act familiarly with, be fresh with, as in *ma-txalli-huu-ʃ yaaxud ɛaleek* don't let him get fresh with you! (3) to aim at, as in *xud ɛala ʃ-ʃagara di bil-bunduqiyya* aim the rifle at the tree, *ʃil-qayyaas bi-yaaxud ɛala ḥaaga sabta* the surveyor takes a bearing on a fixed object. (4) to go by, follow, as in *ma-taxud-ʃ' ɛala kalaam ʃaxuu-k* don't go by what your brother says. - *xad baɛḍ-u* see *baɛḍ*. *xad bi-xaaṭir, xad ɛala xaṭr-(u)* and *xad il-xaaṭir* see *xaaṭir*. - *xad baal-(u)* see *baal*. *xad salaam* see *salaam*.

أَخَذ، وخَد، أَخْد ʃaxxid or *waxxid* /vt/ to accustom, cause to get used to. *ʃinta lli waxxidt-u ɛala qillit il-ʃadab* you're the one who accustomed him to bad manners. *ʃibn-ik zayy' ma trabbii wi-gooz-ik zayy' ma twaxxidii [prov]* you can raise your son, but you must train your husband. - vn *taʃxiid*; ava *miʃaxxid, miwaxxid*.

اتأخد، اتوخد ʃitʃaxxid or *ʃitwaxxid* /vi/ to be made accustomed. - iva *mitʃaxxid, mitwaxxid*.

آخَذ ʃaaxiz /vt/ **1** /usu neg/ to find fault with, blame. *ma-tʃaxiz-nii-ʃ* don't misunderstand me, don't get me wrong. *ma-tʃaxz-uu-ʃ ʃaṣl-u miʃ min hina* don't blame him - he's not from here. **2** to hold accountable. *ʃaxizt-u ɛala kull' ɣalṭa ɛamal-ha* I held him accountable for every mistake he made. - vn *muʃaxza*; ava *miʃaaxiz*.

مؤاخذة *muʃaxza* /n pl -*aat*/ offence, fault. *fii ɛaleek muʃaxzàat fiʃ-ʃuɣl* there are faults you are accused of in your job. ‖*la muʃaxza* please forgive me, no offence intended; - often used, especially by the less educated, when mentioning any mundane or lowly object, as in *gibt-i-lak la muʃaxza g-gazma* ≈ I've brought you the

shoes, if you'll excuse my mentioning them.

اتّاخذ ʔittaaxid /vi/ **1** passive of *xad*. **2a** to be taken aback, be startled. *ʔawwil ma ʃuft' waraqit il-imtiḥaan ittaxidt* I got a shock when first I saw the exam paper. **2b** to be agitated, be upset. *maa-lak bi-tittaaxid kida* why are you taking on so? - ava/iva *mittaaxid*.

اتّخذ ʔittaxaz↑ *(yittixiz, yattaxiz)* /vt, literary passive forms also occur/ **1** to effect. *ʔil-ʔigraʃaat illi b-tuttaxaz* the measures which are taken. **2** to take over, take on, acquire. *ʔil-mazaahir illi b-yattaxizuu-ha* the appearances which they acquire. **3** to treat, regard. *ʔil-ḥikaaya di ʔuttuxizat sabab li-ʔilṣaaʃ il-ʔaḥzaab* this matter was used as a pretext for the dissolving of political parties. - vn ʔittixaaz; ava *mittixiz*; pva *muttaxaz*.

ءخذ see ءخد

ءخر

آخر ʔaaxar↑ /adj, fem ʔuxra, pl ʔaaxariin/ other. *min ʔinsaan li-ʔaaxar* from one person to another. *min waqt' l-ʔaaxar* from time to time. *ʔil-ḥayaah il-ʔuxra* the life to come (in the hereafter).

أخير ʔaxiir /adj */ final. *ʔil-faṣl il-ʔaxiir min il-masraḥiyya* the final act of the play. *ʔil-mayya ir-rabɛa wil-ʔaxiira* the fourth and final watering.

¶ ʔaxiiran /adv/ finally. *kaan rakib-ha sittiin ɛafriit li-ḥadd' ma ʔaxiiran wiṣil* she was on tenterhooks until he eventually arrived.

آخر ʔaaxir /n/ **1a** /w foll indef n/ the last. *ʔaaxir beet* the last house. *fi-ʔaaxir laḥza* at the last moment. **1b** extreme, utmost. *ʔaaxir taɛab* an extreme of fatigue. *yigri ɛala ʔaaxir surɛa* he runs extremely fast. *ramaa ɛala ʔaaxir diraaɛ-u* he threw it as far (or: as hard) as he could. *ɛala l-ʔaaxir* to the last degree, to the utmost, as in *raagil manfuux ɛala l-ʔaaxir* an extremely pompous man. *lil-ʔaaxir [naut]* hard over! **2** *ʔil-ʔaaxir* the Ultimate (epithet of God). **3** /pl ʔawaaxir/ end, latter part. *ʔil-ʔaaxir* or *fil-ʔaaxir* in the end, finally. *min il-ʔawwil lil-ʔaaxir* from first to last. *ʔaaxir innahaar* (at) the end of the day. *bet-na f-ʔaaxir if-faariɛ* our house is at the end of the street. *min ʔaaxir id-dunya* from the ends of the earth. *ɛala ʔaaxir iz-zaman* see *zaman*. *ʔawaaxir iṣ-ṣeef* the latter parts of the summer. - *ʔawaaxir* occurs adjectivally in such phrases as *fil-ɛafart iyyaam il-ʔawaaxir min ramaḍaan* in the last ten days of Ramadan.

¶ *ʔila ʔaxr-u* et cetera.

آخرة ʔaaxira↑ see ʔaxra 2.

آخرة ʔaxra /n/ **1** /only in constr/ the end of, the outcome of. *ʔaadi ʔaxrit-ha* this is the upshot! *ʔaxrit-u kaanit wiḥʃa* he came to a sticky end. *ʔaxrit-ak sooda* ≈ go to hell! ‖ *ʔaxrit-ha* to cut a long story short. **2** *ʔil-ʔaxra* (also *ʔil-ʔaaxira)* the hereafter, the life after death. **3** *[abus]* face. *ʔamma ɛalee ʔaxra* what an ugly mug he has!

آخرانى ʔaxraani /adj */ final, last. *fif-fuhuur il-ʔaxraniyya g-ganiin bi-yibqa tqiil* in the last months the foetus grows heavy.

وخرى waxri /adv/ late, behind time. *bi-tiṣḥa waxri* she's a late riser. *ʔil-waqt' waxri* it's late in the day.

راخر raaxar /fem ruxra, pl ruxriin/ adjective used in apposition as an equivalent of the English 'too', 'also' etc. *ʔana raaxar ma-nimt'-ʃ* I didn't sleep either. *ʔil-baṭaaṭis ɛayza laḥma ʔaktar wil-makaroona ruxra* the potatoes need more meat and so does the pasta. *ʔin-naas kitrit wil-ʔasɛaar ruxra rtafaɛit* the population has increased and prices have risen in turn. ‖ *ya-xii-na nta raaxar* ≈ come off it!

أخّر ʔaxxar /vt/ **1** to make late, delay. *ʔaxxart' safar-i* I delayed my departure. *ʔaxxar saɛt-ak saaɛa waḥda* put your watch back one hour. **2a** to cause to move back. *ʔaxxar il-ɛarabiyya l-wara* move the car back. ‖ *miʃyit tiqaddim rigl' wi-tʃaxxar it-tanya* she walked haltingly or hesitantly. **2b** to cause to regress, cause to deteriorate. *ʔil-ḥarb' ʔaxxarit il-balad* the war put the country back. ‖ *maɛrift-u tʃaxxar* it is a disadvantage to know him. — /vi/ **3** to lose time, become slow (of a watch). *ʔis-saaɛa ʔaxxarit xamas daqaayiq* the watch has lost five minutes. **4** to move back. *ʔaxxar fiwayya* go back a little. - vn *taʃxiir*; ava *miʃaxxar*.

تأخيرة taʃxiira /n pl -aat/ delay. *kull' taʃxiira w-fiiha xeera [prov]* every delay contains (some) benefit.

مؤخّر muʃaxxar /n/ that part of a payment due only after certain conditions have been met (notably that portion of a woman's marriage settlement that she may claim under Muslim law if divorced or widowed).

مؤخّرة muʃaxxira↑ /n/ back part, rear.

اتأخر ʔitʃaxxar /vi/ **1** to be late. *ʔil-qaṭr itʃaxxar in-nahar-da* the train was late today. *ma-titʃaxxaruu-ʃ ɛan il-madrasa* don't be late for school! *ʔitʃaxxar fid-dafɛ* he got into arrears. **2a** to go back, retreat. *ʔitʃaxxar fiwayya ɛan if-fibbaak* move back from the window a little! **2b** to regress, deteriorate. *ḥalt-u tʃaxxarit* his condition has deteriorated. - vn *taʃxiir*; ava *mitʃaxxar*.

متأخّر mitʃaxxar = muʃaxxar.

ءخز see ءخد: ʔaaxiz, muʃaxza, ʔittaxaz↑

ء خ ص
إخص ʔixṣ **1** /interj/ shame! *ʔixṣ ᵃ ɛaleek* shame on you! fie on you! **2** /n/: *buuz il-ʔixṣ, wiff il-ʔixṣ* and *fakl il-ʔixṣ* one who brings bad luck, ill-omened person.
إخصيه، إخصّى *ʔixṣiih, ʔixṣiyy* /interj/ shame (on you)! fie (on you)!.

ء خ ط ب –
أخطبوط ʔuxṭubuuṭ, ʔaxṭabuuṭ /n pl *-aat*/ octopus.

ء خ و see ء خ خ: *ʔaxu, ʔixwaat, ʔixwaan, ʔixwangi, ʔaxawi, ʔuxuwwa*

ء د ا م [1]
آدام ʔadaam[1] /n/ *[Chr]* tune used at vespers and matins, Sunday to Tuesday.

ء د ا م [2] see م د ا م [2]: *ʔadaam*[2]

ء د ء see ء د ى [1]: *ʔadaaʔ*

ء د ب
أدب ʔadab /n/ **1** good manners, politeness. *ma-fii-ʃ ɛandak ʔadab* have you no manners? *sitt ṣaḥbit ʔadab wi-kamaal* a lady of impeccable manners. *ɋaliil il-ʔadab* ill-mannered. *ʔil-ʔadab faḍḍal-u ɛal-ɛilm [prov]* good manners are to be preferred to learning. ‖*maḥall il-ʔadab* or *beet il-ʔadab* lavatory. **2** /pl *ʔadaab*/ letters, literature. *ʔil-ʔadab il-ɛarabi* Arabic literature. ‖ *ʔil-ʔadab il-makfuuf* literary works which talk openly about sex. - *ʔil-ʔadab if-faɛbi* folk literature. — *ʔadaab* /pl n/ **3** formal etiquette. *ʔadaab il-ḥadiis* the etiquette of conversation. **4** morals, morality. ‖*buliiṣ il-ʔadaab* the vice squad. **5** *ʔil-ʔadaab* the arts, the humanities. *kulliyyit il-ʔadaab* the Faculty of Arts.
أدبى *ʔadabi* /adj */ **1** pertaining to literature. *naqd ʔadabi* literary criticism. **2** pertaining to the arts or humanities. *ʔil-qism il-ʔadabi* the Arts Department (e.g., of a secondary school).
أديخانة *ʔadabxaana* /n pl *-aat*/ *[obsol]* lavatory.
أدباتى *ʔudabaati* /n pl *-yya*/ *[obsol]* professional improviser of rhymes. ‖*ɛaamil zayy il-ʔudabaati* clowning about.
أديب *ʔadiib* /n pl *ʔudabaaʔ*/ litterateur, man of letters.
أدّب *ʔaddib* /vt/ to discipline, teach manners to. *ʔaddib ʔawlaad-ak* teach your children some manners! - vn *taʔdiib*; ava *miʔaddib*; pva *muʔaddab*.
تأديب *taʔdiib* /vn/ ‖*maglis taʔdiib* disciplinary board.
تأديبى *taʔdiibi* /adj/ disciplinary. ‖*ɣaara taʔdibiyya* retaliatory raid.
مؤدّب *muʔaddab* /adj */ well-mannered, polite. *ʔuɋɛud muʔaddab ya walad* sit quietly, boy, and behave yourself!
اتأدّب *ʔitʔaddib* /vi/ **1** to be disciplined, be taught manners. **2** to behave politely, show manners. *laazim titʔaddib fi-kalaam-ak* you must speak politely. - ava/ iva *mitʔaddib*.

ء د د ل –
إدّلعدى *ʔiddalɛadi↓ [women in trad soc]* term of address or reference (used particularly in contexts of warding off evil).

ء د ر ج –
إدروجين *ʔidrujiin* <Fr> /n/ hydrogen.

ء د م [1]
آدم ʔaadim /vi/ to eat carefully in small mouthfuls. *ʔaadim fi-ʔakl-ak* eat little by little. - vn *miʔadma*; ava *miʔaadim*.
إدام *ʔidaam* /n/ **1** juices of cooked meat, gravy (consumed by dipping with bread). **2** *[rur]* oil, fat.

ء د م [2] see ء ا د م: *ʔaadam, ʔaadami, ʔaadamiyya*

ء د م [3] see م د ا م [2]: *ʔadaam*[2]

ء د ن see ء ز ن [1]: *ʔadaan*[1], *madna, ʔaddin*

ء د ه م
أدهم *ʔadham* male given name. *ʔadham if-farɋaawi* historical character celebrated in popular songs and literature for his resistance to Turkish tyranny.

ء د و د
أدود *ʔadwad* <Copt> /n/ effeminate man, catamite.

ء د ى [1]
أداة *ʔadaah* /fem n, pl *ʔadawaat*/ instrument, piece of equipment. *ʔig-geef mugarrad ʔadaah fi-ʔiid if-faɛb* the army is merely a tool in the hands of the people. *ʔadawaat ṣiḥḥiyya* sanitary appliances. *ʔadawaat maktabiyya* stationery.
أدّى *ʔadda* **1** /vt/ **1a** to carry out, perform. *ma-bi-y ʔaddii-ʃ waẓift-u maẓbuuṭ* it doesn't perform its function properly. **1b** to give a performance of, give a rendition of. **2** /vi/ to lead, be conducive. *ʔil-ʔasbaab illi*

bi-tʃaddi l-inxifaaq il-mabiʕaat the reasons leading to a drop in sales. - vn *ʃadaaʃ, taʃdiyya, taʃdiya*; ava *miʃaddi, muʃaddi*.
أداء *ʃadaaʃ* /n/ performance, rendering. *ʃil-mumassiliin ʃaddu ʃadaaʃ mumtaaz* the actors gave a fine performance.
مؤدّى *muʃaddi* /n */ performer.

ء د ي [2]
إدّى *ʃidda (yiddi)* <Copt> /vt/ **1** to give, provide (with). *ma-dda-nii-ʃ furṣa* he didn't give me an opportunity. *ʃidda l-ʕagala zeet* he oiled the wheel. *rabb-i-na yiddii-k iṣ-ṣiḥḥa* may our Lord give you health. ‖ *ʃilli ddaa-k yiddii-na [prov]* (He who gave to you will give to us too) ≈ don't imagine that you are the only recipient of God's favours, don't be too proud in your own good fortune. - *yaaxud wi-yiddi* see *ʃaxad*. - *ʃidda ʃabah li-* ... to look like ..., resemble .... **2a** to hand, pass. *ʃiddii-ni k-kitaab da* hand me that book! **2b** *[soccer]* to pass (the ball). **3** to yield, emit, produce. *ʃil-veeṭ ʃidda maḥṣuul ʃakbar* the field produced a larger yield. *ʃiṭ-ṭabla b-tiddi ṣoot ḥilw* the drum makes a nice sound. **4** to subject to action (usually vigorous) by means of (s.th.). *ʃiddaa-ni dmaar* he butted me with his head. *ʃiddaa-ni kalaks* he honked his horn at me. *ʃidda l-koora fig-goon* he slammed the ball into the goal. - vn *middiyya*; ava *middi*.

ء د ي [3] see ء ا د ي: *ʃaadi, ʃadii-*

- ء د ي ل
إيديولوجي *ʃidyulooji* <perh Fr> /adj/ ideological.
إيديولوجيّة *ʃidyulojiyya* /n pl *-aat*/ ideology.

ء ذ ا see ء ز ا

ء ذ ن see ء ز ن [1]

ء ذ ى see ء ز ى

ء ر ا ن س
أورانس *ʃuraanus* <perh Fr> /prop n/ Uranus.

ء ر ء
أرّأ *ʃarraʃ* /vi/ to mock, laugh (at). *dayman yiʃarraʃ ʕala kull[a] ḥaaga b-sabab wi-min ɣeer sabab* he always ridicules everything, whether there is reason for it or not. - vn *taʃriiʃ*; ava *miʃarraʃ*.

ء ر ب
أروبة *ʃaruuba* /fem adj/ possessed of a malevolent cunning (of a woman). *ya ʃaruuba ya ʕaguuza* you old witch!

- ء ر ب ب
أوربّا *ʃurubba* /prop n/ Europe.
أوربّي *ʃurubbi* /adj */ European.
أوربّاوى *ʃurubbaawi↓* /adj */ *[deris]* aping European ways.

ء ر ب س ك
أرابيسك *ʃarabisk* <perh Fr> **1** /coll n/ arabesque(s). **2** /adj invar/ arabesque.

ء ر ب ع see ر ب ع: *ʃarbaʕ, ʃarbaʕa, ʃarbaʕtaaʃar, ʃarbiʕiin*

- ء ر ت د
أرثوذكسي *ʃurtuduksi, ʃartuduksi, ʃursuzuksi, ʃarsuzuksi* <Gr *orthodoksos*> /pl *ʃurtuduks, ʃartuduks, ʃursuzuks, ʃarsuzuks/ [Chr]* **1** /adj/ pertaining to the Orthodox churches. **2** /n/ Orthodox Christian.
أرثوذكسيّة *ʃurtuduksiyya, ʃursuzuksiyya* /n/ *[Chr]* Orthodoxy.

- ء ر ت ش
أرتشوه *ʃartiʃuuh* <Fr *artichaut*> /n pl *-aat*/ small hairpiece with either short or long hair.

- ء ر ت ك
أرتيكاريا *ʃartikarya* <Engl> /n/ *[path]* urticaria, a temporary rash characterized by red patches and itching and caused by certain allergies. ‖ *bi-yiʕmil-li ʃartikarya* he gives me the creeps.

(- ء ر ت و)
إرتواز *ʃirtiwaaz* <Fr *ardoise*> **1** /n/ slate. **2** /adj invar/ made of slate. - also *ʃirdiwaaz*.
إرتوازى *ʃirtiwaazi* <perh Fr *Artois*> /adj/ artesian. *ʃabaar ʃirtiwaziyya↑* artesian wells. ‖ *mayya ʃirtiwaazi* well-water (i.e., not from the Nile or a canal). - also *ʃirdiwaazi*.

- ء ر ث ذ see - ء ر ت د

ء ر ج
أرج *ʃurg* <Fr *orgue*> /n/ electric organ.

- ء ر ج ر
إيروجرام *ʃirugraam* <Fr *aérogramme*> /n pl *-aat*/ air letter.

ء ر ج ن ز
أورجانزا ʃurganza <Engl> /n/ organza.

ء ر ج ن –
أوريجينال ʃurijinaal <Fr original> 1 /n pl -aat/ [print] matrix. 2 /adj invar/ classy, swank.

ء ر ج و ز see ق ر ج و ز : ʃaragooz

ء رخ
أرّخ ʃarrax, ʃarrax 1 /vt/ to put a date on. ʃarrax ig-gawaab bi-tariix in-nahar-da he dated the letter with today's date. 2 /vi/ to write a chronicle or history. bi-yʃarrax lil-ħarb he's writing a history of the war. - vn taʃriix; ava/pva miʃarrax, miʃarrax.
تاريخ tariix /n/ 1 /pl tawariix/ date. 2 /no pl/ history, chronicle. tariix maṣr the history of Egypt. tariix ħayaat-u the story of his life. see further under ت ر خ
تاريخى tariixi /adj/ 1 pertaining to history, historical. 2 chronological. 3 historic.

ء رخ ن
أرخن ʃurxun, ʃarxun <Gr arkhôn> /n pl ʃaraxna/ [Chr] leading layman in church affairs.

ء ر د ا ن
أردان ʃurdaan <prop n Jordan> /n/ [Chr] baptismal font. - also ʃil-ʃurdun.

ء ر د ب ب
أردبّ ʃardabb <Copt> /n pl ʃaraadib, ʃaradibb/ dry measure of 198 litres, ardeb. ʃiħḍar ʃardabb-ak yiziid [prov] ≈ look to your own affairs and they will prosper. ʃardabb' ma-huu-lak ma-tiħḍar keel-u titɛaffar daqn-ak wi-titɛab fi-feel-u [prov] don't attend the measuring of somebody else's ardeb for your beard will get dusty and the load will tire you ≈ mind your own business.

ء ر د ر
أردر، أوردر ʃurdar <Engl> /n pl -aat/ work-order. ʃibɛat ʃurdar lil-warʃa ɛaʃaan ʃurfuf send an order to the workshop for shelves.

ء ر د ن
الأردن ʃil-ʃurdun (also ʃil-ʃurdunn↑) 1 /prop n/ Jordan. nahr il-ʃurdun the river Jordan. 2 /n/ [Chr] baptismal font. - also ʃurdaan.
أردنى ʃurduni (also ʃurdunni↑) 1 /adj */ Jordanian. 2 /n */ a Jordanian.

(ء ر د و –)
إردواز ʃirdiwaaz <Fr ardoise> 1 /n/ slate. 2 /adj invar/ made of slate. - also ʃirtiwaaz.
إردوازى ʃirdiwaazi <perh Fr Artois> /adj/ artesian. ʃabaar ʃirdiwaziyya↑ artesian wells. || mayya ʃirdiwaazi well-water (i.e., water not from the Nile or a canal). - also ʃirtiwaazi.

ء ر د ى –
أورديفر ʃurdeevar <Fr> /n/ hors d'oeuvre.

ء ر ر
إرّ ʃirr /interj/ sound made to attract the attention of, or shoo away, sheep.

ء ر س see و ر س : ʃiris, ʃaras, ʃirs, ʃariis, ʃarras, ʃitʃarris, ʃitʃaaris

ء ر س ز – see ء ر ت د – : ʃursuzuksi, ʃarsuzuksi, ʃursuzuksiyya

ء ر ش م –
أرشمندريت ʃarʃiminidriit <Gr ʿarkhimandritês> /n pl ʃarʃiminidritiyya/ [Chr] archimandrite.

ء ر ش ى ف
أرشيف ʃarʃiif, ʃarʃiif <Fr archives> /n pl -aat, ʃaraʃiif, ʃaraʃiif/ 1 archive. 2 filing cabinet.

ء ر ض
أرض ʃarḍ /fem n/ 1 earth, soil. ʃarḍ' ramliyya sandy soil. 2a ground, surface of the earth. ʃil-ɛaṣafiir bi-tḥuṭṭ" ɛala l-ʃarḍ the birds alight on the ground. nifs-i l-ʃarḍ' tinfaqq' w-tiblaɛ-ni I wish the earth would open and swallow me up. || ʃil-ʃarḍ' tiṣbaḥ sama the world will be turned upside down. - law ma-ʃalit-ak-ʃ il-ʃarḍ' nʃiil-ak ɛala ras-na ≈ we'd do anything for you. - taḥt il-ʃarḍ high and low, as in dawwar ɛaleeha taḥt il-ʃarḍ look for her everywhere, look for her high and low. - min taḥt il-ʃarḍ (1) sparing no effort, going to any lengths, as in hat-ha min taḥt (ṭaqaṭiiq) il-ʃarḍ bring her, regardless of effort. (2) with the greatest of difficulty, as in gibt il-filuus di min taḥt il-ʃarḍ I brought this money after a great deal of trouble. - ma-yinzil-ʃ il-ʃarḍ it never fails, as in kilmit-u ma-tinzil-ʃ il-ʃarḍ you may rely on his word, daɛwit-u ma-tinzil-ʃ il-ʃarḍ his prayer is always answered. - ħ-axsif biiku l-ʃarḍ I'll show you! - ʃil-ʃarḍ iṭ-ṭahra the holy places in the Hijaz. - gab manaxiir-u (or dimaaɣ-u) l-ʃarḍ he forced him to give in. - ʃaadi s-sama w-ʃaadi l-ʃarḍ I have absolutely no-

thing. - *ʕibn il-ʕarḍ* native, especially with reference to the *fallaḥiin*. **2b** floor. *ʕarḍ[i] xafab* a wooden floor. *ḥ-amsaḥ biih il-ʕarḍ* I'll wipe the floor with him! **2c** surface of a card table or gaming table. *ʕil-waraq illi fil-ʕarḍ* the cards which are on the table. **3** *ʕil-ʕarḍ* the Earth, the terrestrial sphere. *ʕarḍ allaah wasɛa [prov]* ≈ there's plenty of opportunity elsewhere. *bi-yquul ya ʕarḍ[i] ithaddi ma-ɛaleeki qadd-i* he says, 'be calm, Earth, there is none on you but I!' (of a very conceited person). — /pl *ʕaraaḍi/* **4** land, landed property. *ɛandi ḥittit ʕarḍ[i] gamb iskindiriyya* I have a piece of land near Alexandria. ‖*feen ʕaraḍii* where on earth is he now? what are his whereabouts?

أرضى *ʕarḍi* /adj/ **1** pertaining to the ground or floor. *ʕid-door il-ʕarḍi* the ground floor. **2** terrestrial, earthly. *ʕil-kura l-ʕarḍiyya* the terrestrial sphere. - /n/ **3** *[elec]* earth.

أرضيّة *ʕarḍiyya* /n pl *-aat*/ **1** floor, flooring, prepared surface. *ʕarḍiyya musallaḥa* reinforced floor. *ʕarḍiyyit iʃ-ʃaariɛ* the road surface. **2** background. *ward[a] ʕaḥmar ɛala ʕarḍiyya zarqa* red roses on a blue background. **3** storage charge, demurrage.

أرض *ʕaraḍ* /coll n/ termite(s).

أرضة *ʕaraḍa* /unit n, pl *-aat*/ a termite.

مأروض *maʕruuḍ* /adj/ **1** underweight, thin and small (as a result of supposed demonic possession). **2** possessed by an evil spirit from the nether world (believed to live underground).

اتأرض *ʔitʕaraḍ* /vt/ **1** to become thin and weak (as a result of supposed demonic influence). **2** to be possessed by an evil spirit. - ava/iva *mitʕiriḍ*.

ء ر ط

أورطة *ʕurṭa* <T *orta*> /n pl *ʕuraṭ, ʕurṭaat*/ **1** *[mil, obsol]* battalion. **2** large group, bunch. *miḥammad wi-zaki w-ɛali - ʕil-ʕurṭa kull-a-ha xaragit* Muhammad and Zaki and Ali - the whole bunch of them went out. *ɛandu ʕurṭit ɛiyaal* he has a lot of children.

ء ر غ ا ط

أرغاطة *ʕurɣaaṭa* <T *ırgat* from Gr> /n pl *ʕaraɣiiṭ*/ windlass, winch, capstan.

ء ر غ ن

أرغن *ʕurɣun* <Engl> /n pl *-aat*/ (church) organ.

ء ر غ و ل

أرغول *ʕarɣuul, ʕurɣuul*↑ /n pl *ʕaraɣiil*/ musical instrument of the *muzmaar* (q.v.) family, consisting of two pipes, one a drone and the other a melody pipe (see Pl.J, 16).

ء ر ف و -

أورفوار *ʕuruvwaar* <Fr> /interj/ au revoir! bye-bye!

ء ر ق

أرق *ʕaraq*↑ /n/ insomnia.

(ء ر ك)

أرك *ʕark* <perh Fr *arc*> /n pl *-aat*/ arc lamp.

أراك *ʕaraak* /n/ tooth-brush tree (Salvadora pesica).

ء ر ك س -

أركسترا *ʕurkistira* <Engl> /n pl *-aat*/ **1** orchestra. **2** dance-band.

ء ر ل ك -

أرلكان *ʕarlikaan* <Fr *arlequin*> /n/ type of hairstyle.

(ء ر م)

أرمة *ʕurma* /n/ *[abus]* lineage. *laɛant-i-lu ʕabu ʕurmit gidd-u* I cursed all his bloody ancestors.

أرمة *ʕarma* <It *armare*> /n/ *[naut]* rigging. *ɛamal il-ʕarma* to ready a ship for sea, fit out a ship.

ء ر م س see ء ر م و س: *ʕarmuus*

ء ر م ل [1] see ر م ل [2]: *ʕarmila*

ء ر م ل [2] see ء ر م ن: *ʕarmalli*

ء ر م م - see ء ر م ن ت: *ʕarmamant*

ء ر م ن

أرمنى *ʕarmanni* (also *ʕarmalli, ʕarmanli*) /pl *ʕarman, ʕarmal, ʕarmanniyya, ʕarmalliyya, ʕarmanliyya, ʕarmanniyyiin, ʕarmalliyyiin, ʕarmanliyyiin/* **1** /adj/ Armenian. **2** /n/ an Armenian.

ء ر م ن ت

أرمنت *ʕarmant* /prop n/ Armant, a town twelve miles south-west of Luxor. ‖*kalb[i] ʕarmant* (also *kalb[i] ʕarmamant*) breed of strong big dog, (loosely) any pedigree dog.

ء ر م و س

أرموس *ʕarmuus* <Gr *armos*> /n pl *ʕaramiis*/ seam, join (e.g., between bricks, planks, parts of a sail). - also *ɛarnuus, ɛarmuus*.

ء ر ن ء -
أرناؤوطى ʃarnaʃuuṭi, ʃarnaʃooṭi 1 /adj/ Albanian. ‖*filfil ʃarnaʃuuṭi* paprika. 2 /n pl *ʃarnaʃuuṭ, ʃarnaʃooṭ*/ an Albanian.

ء ر ن ب
أرنب ʃarnab /n pl *ʃaraanib, ʃanaarib*↓/ 1 rabbit. *bi-yiwlidu zayy il-ʃaraanib* they breed like rabbits. ‖*baqu zayy il-ʃaraanib* they were cowed. 2 *[slang]* a million Egyptian pounds.
أرنبة ʃarnaba /n pl *-aat*/ 1 doe rabbit. *zayy il-ʃarnaba tiwlid kull*^{i} *ʃahreen marra [prov]* ≈ she breeds like a rabbit. 2 (loosely) = *ʃarnab*. 3 *ʃarnabit il-manaxiir* the tip of the nose.
أرنوب ʃarnuub /n/ *[children]* rabbit, bunny.
أرنب ʃarnib 1 /vt/ to cause to cower (like a rabbit). 2 /vi/ to cower (like a rabbit). - vn *ʃarnaba*; ava/pva *miʃarnib*.

ء ر ن س
الأرنس ʃil-ʃurnus /n/ *[obsol]* the supply corps of the British Army.

ء ر ن ى ك
أورنيك ʃurneek <T *örnek*> /n pl *ʃaraniik*/ 1 printed form, blank form. ‖*ʃurneek zanb [mil]* punishment. 2 (dress) pattern. 3 *[print]* matrix. 4 *[eng]* template.

ء ر و
أرو ʃarw (also *qarw*) <Copt> /n/ *[bot]* oak.

ء ر و ل
أرولة ʃarawla /n/ chrysanthemum.

ء ر ى [1]
أريا ʃarya[1] <Engl> /n/ *[soccer]* goal area. *xaṭṭ il-ʃarya* the line demarcating the goal area.

ء ر ى [2]
أريا ʃarya[2] /n pl *ʃaraaya*/ *[naut]* yard of a lateen sail.
آريا ʃarya[3] <It *aria*> /interj/ *[naut]* lower away!

ء ر ى ل
إريل ʃiryal (also *ʃiryil, ʃaryal*) <Engl> /n pl *-aat, ʃaraayil*/ aerial, antenna.

ء ر ى ى ر
أرير ʃaryeer <Fr *arrière*>: *marʃ aryeer [auto]* reverse.

ء ز ا
إزا، إذا ʃiza /conj/ 1 if. *ʃiza ʃiḫna ma-ʃtarenaa-ʃ ver-na ḫa-yiʃtiri* if we don't buy, others will. 2 whether. *ʃisʃal-u ʃiza kaan maʕaa samak* ask him whether he has (any) fish.

ء ز ب ر -
أزبراتير ʃazbarateer <Fr *aspirateur*> /n pl *-aat*/ *[auto]* distributor, - also *ʃasbirateer*.

ء ز ب س -
أزبيستوس ʃazbistus <Engl> /n/ asbestos. - also *ʃasbistus*.

ء ز ب ك
الأزبكيّة ʃil-ʃazbakiyya /prop n/ a public garden in central Cairo, and the area surrounding it. *suur il-ʃazbakiyya* the wall of Ezbekiya garden on the Opera Square side, famous for its second-hand book stalls.

ء ز ت ت
أزوت ʃazutt <Fr> /n/ *[obsol]* azote, nitrogen.
أزوتيك ʃazutiik <Fr *azotique*>: *ḫaamiḍ il-ʃazutiik* nitric acid.

ء ز ر
إزار ʃizaarˀ /n/ 1 /pl *ʃuzur, ʃizaraat*/ long wrapper, loin cloth (used particularly during the pilgrimage to Mecca). 2 /pl *-aat*/ any structural device which goes all round a room (e.g., skirting-board, decorative groove between wall surface and ceiling surface).

ء ز ر ى ط
الأزاريطة ʃil-ʃazariiṭa /prop n/ a district in Alexandria.

ء ز ر ى ه
أزوريه ʃazureeh <Fr *ajouré*> /adj invar/ perforated. - also *ʃajureeh*.

ء ز ز ا ى see also ء ز ز ى ى and ز ى ى
إزّاى ʃizzaay /adv/ 1 how, in what way. *ʃasaʕd-ak ʃizzaay* how can I help you? *ʔult-i-lu yiʕmil-u zzaay* I told him how to do it. 2 how, to what degree. *ʃuufi ʃana ʃaṭṭra ʃizzaay* look how clever I am!

ء ز ز ى ر see also ق ص د ى ر
أزّير ʃazziir /n/ 1 soldering alloy. 2 tinning (for copper pots).

ءزيّ see also ءزاى and زى
إزّى ʕizzayy /interrog adv, always w pron suff or foll n/ how is ..? how are ..? ʕizzayy-ak how are you? ʕizzayy il-ʕawlaad how are the children? ʕizzayy il-ħaal how are things? ʕizzayy iskindiriyya ɛala ħiss-ak how do you (or: did you) find Alexandria?

ءزعر see ¹زعر: ʕazɛar², ʕitʕazɛar

ءزعر-
أزعرينا ʕazɛariina /n/ fuss. ɛaamil ʕazɛariina ɛal-faaḍi he is making a fuss about nothing.

ءزق
مأزق maʕzaqˀ /n pl maʕaaziq/ tight corner, tough spot.

ءزل
أزل ʕazal /n/ eternity. - common only in the phrases: da ʕazal that was very long ago. min ɋadiim il-ʕazal since the beginning of time, from time immemorial.
أزلى ʕazali /adj/ 1 eternal. ‖ da mif ɋillit baxtⁱ bass - da faɋrⁱ ʕazali kamaan it's not just bad luck - it's hopeless poverty. 2 extremely old, as old as Methuselah.

ءزم¹
أزم ʕazam (i) /vt/ to put (s.o.) in a fix. ʕaɋsaaṭ it-tallaaga ʕazamit-ni xaaliṣ (paying off the) fridge instalments left me really short of money. - ava ʕaazim; pva maʕzuum.
أزمة ʕazmaˈ /n pl -aat/ 1 crisis. ʕazmit il-ʕaxlaaɋ the crisis in morals. ‖ ʕiʃtaddi ya ʕazma titħalli [prov] (worsen, crisis, that you may be relieved) ≈ it's darkest before the dawn. 2 shortage. ʕazmit it-taksiyaat the acute shortage of taxis. 3a crisis period (of an illness). 3b attack (of an illness). gaa-lu l-ʕazma btaɋt-u he had one of his attacks.
اتأزم ʕitʕazam /vi/ to be put in a fix. - iva mitʕizim.
أزّم ʕazzim 1 /vt/ to upset (s.o.). — /vi/ 2 to become unavailable or in short supply (of goods etc.). 3 to become critical or complicated. ʕil-ħaala f-libnaan ʕazzimit xaaliṣ the situation in Lebanon became critical. - vn taʕziim; ava miʕazzim.
اتأزّم ʕitʕazzim /vi/ 1 to be upset, be annoyed. 2 to become unavailable or in short supply (of goods). - ava/iva mitʕazzim.

ءزم²
أزمة ʕazma² <Engl> /n/ asthma.

ءزمير¹
إزمير ʕazmiirˈ /prop n/ Izmir (in Turkey).
أزميرلى ʕazmirli /adj/ pertaining to Izmir. ɋinab ʕazmirli Smyrna grapes.

ءزمير²
أزمير ʕazmiir² <Gr smilê> /n pl ʕazamiir/ chisel. - also ʕazmiil.

ءزميل
أزميل ʕazmiil <Gr smilê> /n pl ʕazamiil/ chisel. - also ʕazmiir.

ءزن¹
أذن ʕazan, ʕizin (a, i) /vi/ to grant permission. lamma yiʕzin rabb-i-na when God wills. - vn ʕizn; ava ʕaazin; pva maʕzuun.
إذن ʕizn /n/ 1 /no pl/ permission. ɋan (or baɋdⁱ) ʕizn-ak by your leave, excuse me. bi-zn ˌllaah God willing. 2 /pl ʕuzuun, ʕuzunaat/ warrant, permit. ʕizn' taftiiʃ search warrant. ʕizn' taṣdiir export licence. ‖ ʕizn' bariid postal order. - ʕizn' maṣrafi bank deposit slip.
مأذون maʕzuun /n pl maʕaziin/ official authorized to perform Muslim marriages.
مأذونيّة maʕzuniyya /n/ the office of a maʕzuun.
أدان، أذان ʕadaanˈ /n pl -aat/ [Isl] call to prayer. ‖ yiṣħa min il-ʕadaan ≈ he is awake from the crack of dawn. - kullⁱ waɋtⁱ w-luu ʕadaan [prov] ≈ everything in its own time.
مدنة، مأذنة madna /n pl midan/ 1 minaret. 2 [Isl] bead forming the junction on a string of prayer beads.
أدّن، أذّن ʕaddin, ʕiddan (yiddan) /vt/ 1 [Isl] to call (a prayer). ʕaddin il-ɋaṣr he called the afternoon prayer. — /vi/ 2 [Isl] to give the call to prayer. ‖ bi-yiddan fi-malṭa [prov] (he gives the call to prayer in Malta) ≈ he's flogging a dead horse. 3 [Isl] to become due (of prayer). ʕil-ɋaṣr iddan it is time for the afternoon prayer to be called. 4 to crow (of a cock). - vn taʕdiin; ava/pva miʕaddin, middan.
مؤذّن muʕazzin /n */ muezzin.
استأذن ʕistaʕzin /vt and vi/ 1 to ask permission (of). ʕistaʕzint in-naaẓir (or min in-naaẓir) have you asked the headmaster's permission? 2 to take one's leave (of). ʕastaʕzin-kum (or ʕastaʕzin) baɋa I must be going then. - vn ʕistiʕzaan; ava mistaʕzin.

ءزن²see ءودن: ʕuzn

ءزوز
أزوزة ʕazuuza <Gr gazoza> /n/ [non- Cairene] pop, carbonated soft drink. - also gazuuza, kazuuza.

ء ز ى
أذى ʔaza[1] *(i)* /vt/ to harm. ‖ *ʔallaah yiʕzii-k* ≈ may you suffer for the sufferings you've caused to others (used as a mild rebuke). - vn *ʔaza, ʔaziyya*; ava *ʔaazi*; pva *maʕzi*.
أذى ʔaza[2] /n/ skin disease, specifically ringworm. *bi-yitɛaalig min il-ʔaza lli f-raas-u* he is being treated for ringworm.
أذيّة ʔaziyya /vn/ ‖ *wiff' ʔaziyya* one who brings harm to others (e.g., by tale-bearing, malicious gossip, or by being tyrannical or quick to punish).
مؤذى *muʕzi* /adj */ harmful.
اتأذى *ʔitʕaza* /vi/ to be harmed, be injured. - iva *mitʕizi*.
اتأذّى *ʔitʕazza* /vi/ to be upset, be worried. - iva *mitʕazzi*.

ء ز ى ء see ز ى ى : *ʔazyaaʔ*

ء س
إس *ʔis* <Copt> /interj/ behold!

ء س ا see ء س ى : *ʔasa*

ء س ب ا ت
إسباتى *ʔisbaati* <It *spade*> /coll n/ spade(s) (in cards). ‖ *raaḥ fi-sabɛa ʔisbaati* he fell into a deep sleep.

ء س ب ا ن see ء س ب ن – : *ʔisbaani*

ء س ب ا –
إسباتس *ʔisbaatis* /prop n/ popular carbonated soft drink.

ء س ب ت –
إسبتلية *ʔisbitalya* <T *ispitalya* from It> /n pl *-aat*/ hospital. *ʔil-ʔisbitalya ṣ-ṣadriyya* the hospital for chest diseases. - also *ʔistibalya*↓.

ء س ب ج –
إسباجيتى *ʔisbagitti* <It> /n/ spaghetti. - also *ʔisbakitti*.
إسباجيتينى *ʔisbagittiini* <It> /n/ spaghettini. - also *ʔisbakittiini*.

ء س ب د –)
إسبداج *ʔisbidaag* <P *safedâj*> /n/ white lead, ceruse. - also *sibidaag*.
إسباديقون *ʔisbadiquun* <Gr *despodikon*> /n/ *[Chr]* central square of the impression with which a eucharistic loaf (*ɛurbaan*) is stamped.

ء س ب ر – [1]
أسبرين *ʔasbiriin, ʔisbiriin* <Engl> /n/ aspirin.
أسبرينة *ʔasbiriina, ʔisbiriina* /unit n, pl *-aat*/ an aspirin tablet.
أسبرينايّة *ʔasbirinaaya, ʔisbirinaaya* = *ʔasbiriina*.

ء س ب ر – [2])
أسبراتير *ʔasbirateer* <Fr *aspirateur*> /n pl *-aat*/ *[auto]* distributor. - also *ʔazbarateer*.
إسبريه *ʔisbireeh* <Engl> /n/ spray (usually hair-spray).

ء س ب س –
أسبيستوس *ʔasbistus* <Engl> /n/ asbestos. - also *ʔazbistus*.

ء س ب ك –
إسباكيتى *ʔisbakitti* <It> /n/ spaghetti. - also *ʔisbagitti*.
إسباكيتينى *ʔisbakittiini* <It> /n/ spaghettini. - also *ʔisbagittini*.

ء س ب ل
إسبلايت *ʔisbilaayit* <T *ispalet*> **1** /coll n/ epaulette(s). **2** /n pl *-aat*/ epaulette.

ء س ب ن –
إسبانيا *ʔisbanya* or *ʔasbanya* /prop n/ Spain.
إسبانى *ʔisbaani* or *ʔasbaani* **1** /adj/ Spanish. – /n/ **2** /pl *ʔisbaniyyiin, ʔasbaniyyiin, ʔisbaan, ʔasbaan*/ a Spaniard. **3** /no pl/ the Spanish language.
إسبانيولى *ʔisbanyooli* /pl *ʔisbanyool*/ **1** /adj/ Spanish. *ḫumma ʔisbanyooli* Spanish influenza. *raqṣa ʔisbanyooli* Spanish dance, Flamenco dance. **2** /n/ *[obsol]* Spaniard. – /no pl/ **3** the Spanish language.

ء س ب و ر
إسبور *ʔisboor* <Fr *sport*> /adj invar/ **1** casual (of clothes etc.). *ʔif-fanṭa di sboor mif tiwalitt* that's a casual bag, not for dressy occasions. – /adverbially/ *laabis ʔisboor* dressed casually. **2** broad-minded. *xallii-k ʔisboor* don't be so narrow-minded!

ء س ت
است *ʔist*↑ /n/ behind, posterior, backside.

ء س ت ا د
إستاد *ʔistaad* <Fr *stade*> /n pl *-aat*/ stadium.

ء س ت ا ن
الاستانة *ʔil-ʔistaana, ʔil-ʔasitaana* <T *asitane*> /prop n/ *[obsol]* Istanbul.

(ء س ت ب ب)
إستوبّ ʃistubb <Engl *stop*>: *nuur il-ʃistubb* (1) red traffic-light. (2) brake-light. *saaʒa stubb* stop-watch. *ʃistubb [cin]* cut!
إستوبّة ʃistubba <It *stoppa*> /n/ **1** /pl *-aat*/ length of oakum used as a bung for a leaky joint. **2** /coll n/ rag. -also *ʃistubba*.

ء س ت ب ن
إستبن ʃistibn <Engl *stepney*> **1** /n pl *-aat*/ spare wheel. **2** /adj invar/ spare, held in reserve. *ʒalam ʃistibn* a spare pen.
إستبنة ʃistibna /n pl *-aat*/ spare wheel.

(ء س ت ب -)
إستابينا ʃistabeena <It *sta bene*> /interj/ agreed! done!
إستبليا ʃistibalya↓ <T *isbitalya* from It> /n pl *-aat*/ hospital. -also *ʃisbitalya*.

ء س ت ج -
إستجماتيزم ʃistigmatizm <Engl> /n/ astigmatism.

ء س ت د -
إستوديو ʃistudyu <perh It> /n pl *-haat*/ studio, especially of a photographer. *kanaba studyu* a studio couch.

ء س ت ذ see ء س ت ز

ء س ت ر
أستر ʃustur, ʃuʂtur <perh It *lustro*> /n/ spirit polish used for furniture.
أسترجى ʃusturgi /n pl *-iyya*/ French polisher.

ء س ت ر ب
إستروبيا ʃistrubya <perh Fr *estropié*> **1** /adv/ by chance, by a fluke. *nagaḥ fil-imtiḥaan ʃistrubya* he succeeded in the exam by a fluke. **2** /n pl *-aat*/ fluke, chance. -/adjectivally/ *nagaaḥ ʃistrubya* false success. *da fannaan ʃistrubya* he's an impostor making himself out to be an artist.

ء س ت ر ت
إستارت ʃistart <Engl> /n/ start (of a race). ‖*siwitʃ il-ʃistart* start-switch.

ء س ت ر - 1
إستراتيجي ʃistiratiiji <Engl> /adj */ strategic.
إستراتيجيّة ʃistratijiyya /n/ strategy.

ء س ت ر - 2
أستراليا ʃusturalya /prop n/ Australia.
أسترالى ʃusturaali **1** /adj */ Australian. ‖*baʁl usturaali* an oaf. **2** /n */ an Australian.

ء س ت ر - 3)
إسترادة ʃistiraada <Fr *estrade*> /n pl *-aat*/ table, wooden platform in a classroom.
إستريو ʃistiryu <Engl> /n pl *-haat*/ **1** stereo record-player. **2** discotheque.
إسترلينى ʃistirliini <Engl> /adj/ sterling.

ء س ت ز
أستاذ ʃustaaz /n pl ʃasatza, ʃasatiiz↓/ **1** title of, and polite form of address or reference to, a teacher or to a man not otherwise qualified for a title (e.g., by profession or status). **2a** *[acad]* professor. *ʃustaaz musaaʒid* university teacher approximately equal to senior lecturer (Brit.) or associate professor (U.S.). *ʃustaaz kursi* (or *bi-kursi*) holder of a professorial chair. **2b** school-teacher. **3** man wearing the traditional dress of a *feex* (i.e., a gown and turban). ‖*daftar il-ʃustaaz* master ledger, master register.
أستاذة ʃustaaza /n pl *-aat*/ **1** *[acad]* woman professor. **2** woman school-teacher.
أستازيّة ʃustaziyya /n/ *[acad]* **1** M.A. degree. **2** professorship. *kursi l-ʃustaziyya* professorial chair.
اتأستذ ʃitʃastiz /vi/ *[abus]* to give pompous or officious advice, play the school-master. *ʃinta ḫa-titʃastiz ʒaleena* are you trying to tell us what's what? -vn *ʃastaza*; ava *mitʃastiz*.

ء س ت غ - see غ م ى : *ʃistuʁummaaya*

ء س ت ف -
إستفندى ʃistafandi <prop n *Yusuf Efendi*> /coll n/ tangerine(s). -also *yusafandi, yustafandi, yuusif ʃafandi, yusfi, safandi*.
إستفندية ʃistafandiyaaya /unit n, pl *-aat*/ a tangerine. -also *yusafandiyaaya, yustafandiyaaya, yuusif ʃafandiyaaya, safandiyaaya*.

ء س ت ك see also ء س ت ى ك
أستك ʃastik <Engl> /n/ **1** elastic. *gazma ʃastik* a pair of elastic-sided boots. *zimmit-u ʃastik* his conscience is flexible. **2** /pl *ʃasaatik*/ piece of elastic (usually covered with some kind of material). **3a** /coll n/ rubber band(s). **3b** /pl *ʃasaatik*/ rubber band.
أستكاية ʃastikaaya /unit n, pl *-aat*/ a rubber band.

ء س ت ك ك
إستوكّ، ستوكّ ʃistukk <Engl> /n pl *-aat*/ *[comm]* stock.

ء س ت ك –
أستكوزا ʔastakooza, ʔistakooza <Gr astakos> /n/ **1** /coll/ spiny lobster(s), langouste(s). **2** /unit n, pl -aat/ a spiny lobster, a langouste.
أستكوزاية ʔastakozaaya /unit n, pl -aat/ a spiny lobster, a langouste.

ء س ت ل ن –
أستلين ʔasitliin <Engl> /n/ acetylene. *liḥaam ʔuksijiin asitliin* oxy-acetylene welding.

ء س ت م – see ء م ر [1]: *ʔistimaara*

(ء س ت ن ج)
إستنج ʔistung <T ustunç> /n pl -aat/ draughtsman's case of drawing instruments. - also *ʔuṣṭung*.
إستنجة ʔistinga <T istinga> /n/ *[naut]* brail.

(ء س ت ن –) [1]
إستنجلينا ʔistangaliina /adj invar/ crazy.
إستنسل ʔistinsil <Engl> /n/ stencil. *maṭbaɛit ʔistinsil* mimeograph machine.

ء س ت ن – [2] see ء ن ى [1]: *ʔistanna*

ء س ت و ن
أسيتون ʔasitoon <perh Fr> /n/ acetone.

(ء س ت ي ك)
أستيك ʔusteek <T köstek> /n pl -aat, ʔasatiik, ʔasaatik/ watch strap, watch bracelet.
أستيكة ʔastiika[1] <Fr élastique> /n pl ʔasatiik/ **1** eraser, rubber. **2** barber's rubber bowl (with a base for wiping lather off the razor).
أستيكة ʔastiika[2] <It stecca> /n pl -aat/ **1** stick of carved bone (used in book-binding). **2** billiard cue.

ء س ت ى ل
إستيل ʔistiil <Fr style> /n/ period furniture, especially of the French rococo style.

ء س د
أسد ʔasad /n pl ʔusuud, ʔusúda/ **1** lion. *mudarrib ʔusuud* lion tamer. *daaʔ il-ʔasad [path]* leontiasis. **2** *ʔil-ʔasad [astrol]* Leo.
أسّد ʔassid /vi/ to become coarse (of skin). *ʔiday-ya ʔassidit mil-qaʃaf* my hands have become (rough from being) chapped. - vn *taʔsiid*; pva *miʔassid*.
اتأسّد ʔitʔassid /vi/ *[path]* to be affected by leontiasis. - iva *mitʔassid*.
استأسد ʔistaʔsid /vi/ to show courage, pretend to be brave. - ava *mistaʔsid*.

ء س ر [1]
أسر ʔasar[1]↑ *(i)* /vt/ to take captive. - vn *ʔasr, ʔasr*; ava *ʔaasir*; pva *maʔsuur*.
أسير ʔasiir[1] /n pl *ʔasra, ʔusara, yusara/* prisoner, captive.
¶ *ya badawi gaab il-yusara* o Badawi (who) brought back the captives! (chant sung in praise of Sayyid Ahmad el-Badawi).
اتاسر ʔitʔasar /vi/ to be captured. - iva *mitʔisir*.

ء س ر [2]
أسرة ʔusra /n pl ʔusar/ **1** family. *ʔafraad il-ʔusra* family members. **2** dynasty. **3a** staff. *ʔusrit il-magalla* the staff of the magazine. *ʔusrit ig-gamɛa* the staff of the university. **3b** social or cultural club in, e.g., a university.

ء س ر [3]
أثر ʔasar[2] /n pl ʔasaar/ **1** effect. *bi-ʔasar ragɛi* with retroactive effect. *ʔil-ɛilaqaat if-faxsiyya liiha ʔasar kibiir fit-taɛaamul maɛa l-ɛumala* personal relations greatly influence one's dealings with clients. **2a** trace, vestige. *ʔasar rigl* footprint. *laazim ʔasar if-faḥm' yitɣisil* the trace of grease must be washed off. *ʔil-ʔutubiis mif bayin-lu ʔasar* there's no sign of the bus. **2b** relic. *ʔis-saaɛa di ʔasar ɛan gidd-i* this watch came down to me from my grandfather. ‖ *ʔasar* (or *ʔatar) in-nabi* a village on the Nile between Cairo and el-Ma'adi. — *ʔasaar* /pl n/ **3** antiquities, historical remains. *maṣlaḥit il-ʔasaar* the Department of Antiquities. *daar il-ʔasaar* the Egyptian Museum. *bi-ytaagir fil-ʔasaar* he deals in (Egyptian) antiquities.
أثر، أتر ʔatar /n pl -aat/ a personal article, usually a piece of clothing, used as a token in magic or folk medicine (cf *ʔasar* 2 b).
أثرى ʔasari /adj */ pertaining to antiquities or historical remains. *ʔil-ʔamaakin il-ʔasariyya* historical sites. *tuḥaf ʔasariyya* historical treasures. *ɛarabiyya ʔasariyya* (1) a veteran car. (2) *[joc]* an old jalopy.
مأثور *maʔsuur*↑ /adj/ preserved from the past. *ḥikam maʔsuura* treasured aphorisms from the past.
أثّر ʔassar /vi/ **1** to have an effect, exert influence. *ma-tḥawil-f' tʔassar ɛala raʔy in-naas* don't try to influence people's opinions. *tavayyuraat is-suuq bi-tʔassar ɛala l-iqtiṣaad* fluctuations in the market affect the economy. **2** to have emotional impact. *ʔil-film' ʔassar ɛalayya qawi* the film moved me deeply. - vn *taʔsiir*; ava *miʔassar, muʔassir*.

تأثير *taʃsiir* /n pl *-aat*/ effect, impact. *taʃsiir il-ħaḍaara f-ʃarçiyya ɛala l-ɣarb* the impact of Eastern culture on the West.
التأثيريّة *ʃit-taʃsiriyya* /n/ *[art]* impressionism.
مؤثر *muʃassir*↑ /n pl *-aat*/ effect. *muʃassiraat ṣotiyya* sound effects.
اتأثّر *ʃitʃassar* /vi/ **1** to be influenced, be affected. *kunt*^{i} *lissa mitʃassar bil-minawwim* I was still under the effect of the sleeping pills. **2** to be affected emotionally. *ʃitʃassart*^{i} *lamma ʃuft-a-ha bi-tɛayyaṭ* I was moved when I saw her crying. - iva *mitʃassar*.
استأثر *ʃistaʃsar*↑ /vi/ **1** to take exclusive possession. *ʃistaʃsar bil-filuus kull*^{i}*-ha l-nafs-u* he appropriated all the money for himself. **2** to exercise a monopoly. *ʃif-ʃirka staʃsarit bi-tawziiɛ il-laban* the company had a monopoly in milk distribution. - vn *ʃistiʃsaar*; ava *mistaʃsar*.

ء س ر^{4} see ء س ى ر: *ʃasiir*^{2}

ء س ر ء –
إسرائيل *ʃisraʃiil* /prop n/ Israel.
إسرائيلي *ʃisraʃiili* **1** /adj */ Israeli. **2** /n */ an Israeli.

ء س ر ف –
إسرافيل *ʃisrafiil* /prop n/ *[Isl]* Israfil, the angel who will sound the trumpet on the Day of Judgement.

ء س س^{1}
أسّ *ʃuss* /n/ **1** *[math]* power, exponent of a power. *ʃitneen ʃuss*^{i} *talaata* two to the power of three, two cubed. **2** root, origin. *ʃir-raagil da ʃuss*^{i} *(il-)fasaad* this man is the root of all corruption.
إسّ *ʃiss*^{1} /n/ motive, cause. *ʃilli ħaṣal kaan bi-ʃiss*^{i} *minha* she was the cause of all that happened.
أساس *ʃasaas*^{1} /n pl *-aat*/ basis, foundation. *ʃasasaat il-mabna* the foundations of the building. *kiriim ʃasaas* foundation cream. *ʃil-ɛuluum ʃasaas il-ħayaah* the sciences are the basis of life. *ʃixtiyaar ħurr*^{a} *ɛala ʃasaas il-musawaah been il-gamiiɛ* a free choice on the basis of complete equality. *naas ʃasas-hum min ma-fii-ʃ* people who started from nothing.
¶ *ɛala ʃasaas ʃinn* /conj/ on the understanding that. *saab il-muftaaħ maɛa l-bawwaab ɛala ʃasaas ʃinn*^{i} *lamma ykuun ɣayib niqdar nudxul* he left the key with the janitor on the understanding that we can get in when he's away. - *ʃasaasan* /adv/ basically, fundamentally. *ʃil-ħarb*^{i} *ʃasaasan imtiħaan lif-faɛb* war is basically a test of the people.

أسّس *ʃassis*^{1} /vt/ **1** to found, base. **2** to prepare (a wall or the like) for painting. - vn *taʃsiis*; ava/pva *miʃassis*.
مؤسّس *muʃassis*↑ /n */ founder. *muʃassisiin il-ħizb il-waṭani* the founders of the National Party.
مؤسّسة *muʃassasa* /n pl *-aat*/ **1** public sector corporation. **2** organization, (cultural or educational) foundation. **3** legal institution. *dawlit il-muʃassasaat* rule according to established legal institutions.
اتأسّس *ʃitʃassis*^{1} /vi/ to be founded, be established. - iva *mitʃassis*.

ء س س^{2}
إسّ *ʃiss*^{2} <T *es*> /n/ *[mus]* rest.

ء س س^{3}
أثاث *ʃasaas*^{2} /n/ furniture.
أثّث *ʃassis*^{2} /vt/ to furnish (a house). - vn *taʃsiis*; ava *muʃassis*.
اتأثّث *ʃitʃassis*^{2} /vi/ to be furnished. - iva *mitʃassis*.

ء س ط ا
أسطى، أوسطى *ʃusṭa* <T *usta*> /n pl *ʃusṭawaat*/ title of, and form of address or reference to, one who has undergone training or apprenticeship in a craft or profession regarded as skilled, e.g., foreman of a small workshop, carpenter, qualified machine operative, driver, laundry-man, belly-dancer, leader of a troupe of female dancers and musicians.

ء س ط ا ف
إسطاف *ʃisṭaaf* <Engl> /n/ staff (in an organization, school etc.).

ء س ط ا م
إسطامة *ʃisṭaama* <perh It *stame*> /n pl *-aat*/ stile (of a door or window).

ء س ط ب ب
إسطوبّة *ʃisṭubba* <It *stoppa*> /n/ **1** /pl *-aat*/ length of oakum used as a bung for a leaky joint. **2** /coll n/ rag. - also *ʃistubba*.
إسطوبّاية *ʃisṭubbaaya* /unit n, pl *-aat*/ a piece of cotton waste.

ء س ط م ب
إسطمبة *ʃisṭamba* <It *stampa*> /n pl *-aat*/ **1** mould, matrix. **2** piece of equipment, or tool, of a standard size. *bubiina sṭamba* a standard-size spool. **3** *[carp]* curve (instrument for describing curves).

ء س ط ن –
إسطانبول ʔisṭambuul, ʔisṭanbuul /prop n/ Istanbul.
إسطانبلى ʔisṭambulli, ʔisṭanbulli <T istanbullu> /adj */ pertaining to Istanbul. ‖qarɛ' ʔisṭambulli variety of edible gourd (Curcubita maxima), similar to a pumpkin. -kanaba ʔisṭambulli ottoman, divan. -gibna ṣṭambulli mature salty white cheese. -furraaba ṣṭambulli prayer-bead tassle made of fine metal chain.

ء س ط و ر
أسطورة ʔusṭuura↑ /n pl ʔasaṭiir/ **1** legend, myth. ʔik-kalaam da ʔasaṭiir that talk is (mere) tales. **2** source of amazement.
أسطورى ʔusṭuuri /adj/ legendary, mythical.

ء س ط و ل
أسطول ʔusṭuul, ʔasṭuul /n pl ʔasaṭiil, ʔasaṭiil/ fleet.

ء س ط و –
إسطوانة ʔisṭuwaana /n pl -aat/ **1** cylinder. **2a** gramophone record. **2b** spiel, patter, rigmarole.
إسطوانى ʔisṭuwaani, ʔusṭuwaani /adj/ cylindrical.

ء س ف
أسف ʔasaf /n/ sorrow, regret. maɛa (or li-) l-ʔasaf unfortunately.
آسف ʔaasif /ava/ regretful, sorry.
اتأسّف ʔitʔassif, ʔitʔassaf /vi/ to apologize, express regret. ʔitʔassifit-lu li-lli ḫaṣal minhum she apologized to him for what they had done. - ava mitʔassif, mutaʔassif.
متأسّف mutaʔassif /adj */ sorry, regretful.
مؤسف muʔsif /adj/ distressing, saddening. bi-yitṣarraf taṣarrufaat muʔsifa he behaves in an upsetting way. xabar muʔsif sad news.

ء س ف خ ص
إسفخص ʔisfuxṣ /interj/ exclamation of disgust ≈ ugh! ʔisfuxṣ[a] ɛala kida how disgusting!

ء س ف ل ت
أسفلت ʔasfalt <Fr> /n/ asphalt.

ء س ف ى ن
إسفين ʔisfiin <Gr sphên> /n pl ʔasafiin/ [carp] wedge. ‖ḍarab ʔisfiin benhum he drove a wedge between them. - ʔidda-lha ʔisfiin he played a dirty trick on her.

ء س ق ر –
إسقربوط ʔisqarbuuṭ↑ <It scorbuto> /n/ scurvy.

ء س ق ف
أسقف ʔusquf, ʔusquf <Gr episkopos> /n pl ʔasaaqifa, ʔasaqfa, ʔasaɋfa/ bishop.
أسقفى ʔusqufi, ʔusɋufi /adj/ episcopal.
أسقفيّة ʔusqufiyya, ʔusɋufiyya /n pl -aat/ **1** bishopric, episcopate. **2** bishop's residence. **3** administrative centre of a bishopric.

ء س ك ا –
أسكاريس ʔaskaaris, ʔiskaaris <Gr askaris>: duud ʔaskaaris [path] ascarides, threadworms.

ء س ك ت ش
إسكيتش ʔiskitʃ <Engl> /n pl -aat/ **1** sketch. **2** sketch pad.

ء س ك ت –
إسكيتنج ʔiskiiting, ʔiskeeting <Engl> /n/ skating.

ء س ك ر ت
إسكرتة ʔiskirta or ʔiskarta (also sikirta or sikarta) <It scarto> /n/ **1** cotton waste. **2** something shoddy or in bad condition, something fit only to be thrown away. ɋarabiyya skirta a wreck of a car. **3** discard pile (in cards).
إسكرتو ʔiskirtu or ʔiskartu (also sikirtu or sikartu) = ʔiskirta.

ء س ك ر و
إسكرو ʔiskuruu <Engl screw> /n/ spin (on a ball). ʔidda (or liɋib) ik-koora skuruu he put a spin on the ball. ‖ɋalam ʔiskuruu propelling pencil.

ء س ك ل
أسكلة ʔaskala <prob T iskele from Gr> /n pl ʔasaakil/ quay, wharf, jetty.

ء س ك ن – [1]
إسكندريّة ʔiskindiriyya, ʔiskandariyya /prop n/ Alexandria.
إسكندرانى ʔiskandaraani /adj */ **1** Alexandrian. **2** having dark-brown glaze (of pottery). – /n/ **3** /pl -yya/ an Alexandrian. **4** /no pl/ drum rhythm employed in the zaar.

(ء س ك ن –) [2]
إسكنديل ʔiskandiil <T iskandil> /n/ [naut] lead and line.
إسكندال ʔiskandaal <Fr scandale> /n/ scene, scandal.

ء س ك و ت see ء ش ك و ط : *ʕiskuuta*

ء س ك و ل
إسكولة *ʕiskuula, ʕiskoola* <It *scuola*> *[obsol]*: *bituuɛ ʕiskuula* students (in general). - *ɛaamil bitaaɛ ʕiskuula* acting learned.

ء س ل و ب see [3] س ل ب

[1] ء س م see also س م ى
اسم *ʕism*[1] /n/ **1** /pl *ʕasma, ʕasaami, ʕasmaaʕ*/ name. *bi-niɛraf-u bil-ʕism* we know him by name. *ɛala ʕism* ... after the name of ..., as in *sammuu ɛala ʕism abuu* they named him after his father, *kiniisa ɛala ʕism il-ɛadra* a church dedicated to the Virgin Mary. *law kaanit il-ʕasma tinfara kaan il-faqiir samma-bn-u xara [prov]* (if names had to be bought with a price, the poor man would have to name his son Shit) ≈ what's in a name? || *ʕana xaayif ɛala ʕism-i* I am fearful for my reputation. -*ʕism*[a] *ɛala musamma* a fitting name. -*ɛaafit il-ʕasaami [women]* an expression used when someone (especially a child) is mentioned by name ≈ may the one mentioned live long! - *ʕil-ʕasmaaʕ il-ḥusna* the epithets of God. - *ʕism-alla* (or *ʕism-alla ɛala* ...) and, among Christians, *ʕism iṣ-ṣaliib* (or *ʕism iṣ-ṣaliib ɛala* ...) an invocation of divine protection, as in *ʕizzayy ibn-ik ʕism-alla* (or *ʕism-alla ɛalee*) ≈ how's your son, God protect him? *ʕil-waad ʕism-alla ɛala maqaam-ak ball*[i] *ruuḥ-u* ≈ the boy, begging your pardon, wet himself; - also used with affectionate derision, as in *gaa-ni si-sm-alla mḥammad yinadii-ni* ≈ Mr - may God bless his little heart - Muhammad came to call me, *ʕism-alla ɛala ɛaql-ak* ≈ use your head! - *(ʕitfaḍḍal) bi-sm-illa* ≈ please help yourself! (an invitation to share food). - *bi-sm illaahi r-raḥmaan ir-raḥiim [Isl]* invocation of divine protection used at the beginning of any task, no matter how great or small. - *ʕism in-nabi ḥars-u w-ṣayn-u* may the Prophet's name guard and protect him (used in conversation about a child). - *da-sm-u kalaam* is that any way to talk? - *ɛazzeet-u ɛal-baab wi-sm-i ʕaddeet waagib* I only paid him my condolences at the door, but one may say I've done my duty. - *bi-yruuḥu l-madrasa ma-b-yiɛmiluu-ʃ ḥaaga wil-ʕism*[i] *mudarrisiin* they go to school and do nothing and for that they get called teachers. **2** /pl *ʕasmaaʕ* only/ *[gram]* noun.
¶ *ʕism*[i] *ʕinn* /conj/ in view of the fact that. *ʕinta l-masʕuul ʕism innak rayyis-hum* you are responsible since you are their boss.
اسمى *ʕismi* /adj */ nominal. *sanad ʕismi* a nominal share.

[2] ء س م
إثم *ʕism*[2] /n/ sin. *ʕinna baɛḍ iẓ-ẓann*[i] *ʕism* ≈ to think even a little evil of someone is a sin (admonition not to think ill of others).

ء س م ع –
الإسماعيليّة *ʕil-ʕismaɛiliyya* /prop n/ Ismailia, a city on the west bank of the Suez Canal.
الإسماعيلى *ʕil-ʕismaɛiili: ʕiṇ-naadi l-ʕismaɛiili* the Ismailia Club (famous for its football team).
إسماعلاّوى *ʕismaɛallaawi* **1** /adj/ of, or pertaining to, Ismailia. – /n/ **2** /pl *-yya*/ one from Ismailia. **3** /coll/ honeydew melon(s).

ء س م ن ت
أسمنت *ʕasmant* <Engl> /n/ cement.

ء س م و –
إسموكنج *ʕismooking* <Fr *smoking*> /n invar/ **1** dinner-suit(s), (men's) evening-dress. **2** smooth woven synthetic fabric.

ء س ن ا
إسنا *ʕisna* /prop n/ Esna, a town in Upper Egypt (known in particular for its fine lentils).
إسناوى *ʕisnaawi* **1** /adj */ pertaining to the town of Esna. **2** /n pl *-yya*/ native of Esna.

ء س ن س –
أسانسير *ʕasanseer, ʕaṣanṣeer* <Fr *ascenseur*> /n pl *-aat*/ **1** lift, elevator. **2** *[phot]* manoeuvring apparatus of a camera tripod.

ء س و ا ن
أسوان *ʕaswaan* /prop n/ Aswan, a city and province in Upper Egypt.
أسوانى *ʕaswaani, ʕaswaani* /adj */ pertaining to Aswan.
أسوانلى *ʕaswanli* /adj */ pertaining to Aswan.

ء س و ح see س و ح : *ʕiswiḥ*

ء س و خ see س و خ : *ʕiswix*

ء س و ر see [3] س و ر : *ʕaswira, ʕisweera*

ء س ى
أسى *ʕasaʕ* /n/ sorrow.
أسيّة *ʕasiyya* /n/ maltreatment and the suffering it causes. *ʕil-ʕumm*[i] *dayman ḥammaalit ʕasiyya* a mother always bears the brunt.

ء س ي ا
آسيا ʕasyaˀ /prop n/ Asia.
آسيوى ʕasyawiˀ /adj */ Asian.

ء س ي ر see also ء ت ي ر
أثير ʕasiir[2]: ɛala ginaaḥ il-ʕasiir by radio.

ء س ي و ط
أسيوط ʕasyuuṭ /prop n/ Assiut, a city and province in Upper Egypt.
أسيوطى ʕasyuuṭi /adj */ pertaining to Assiut. ‖*ṭaqm' ʕasyuuṭi* set of furniture consisting of a sofa and chairs, having wooden frames and arms and separate cushions for seats and backs.

ء ش see ء ى ش: ʕeef

ء ش ا ع [1] see ش ع ع: ʕuʃaaɛa

ء ش ا ع [2] see ش ى ع [1]: ʕiʃaaɛa, ʕaʃaaɛa

ء ش ب ا ر
إشبار ʕiʃbaar <Copt>: *ʕiʃbaar ɛala-* expression of disdain, as in *ʕiʃbaar ɛaleena min kalam-hum fiina* what does it matter to us if they gossip about us!

ء ش ت ك
أشتك ʕaʃtik <perh T *haştek*> /n pl ʕaʃaatik/ underarm gusset.
أشتيك ʕaʃtiik /n pl ʕaʃatiik/ = ʕaʃtik.

ء ش ر see also ش و ر [1]
أشر ʕaʃʃar /vi/ **1** to endorse officially, give a signed ruling (on an official or commercial document). *ʕaʃʃar ɛalee bil-ḥifẓ* he gave it a 'no action' endorsement. **2** to gesture, usually with the hand. *kaanit ḥa-tinzil maɛaaya loola ʕaʃʃar laha tɋuul laʃ* she would have come down with me had it not been for his motioning to her (secretly) to refuse. - vn *taʃʃiir*; ava *miʃaʃʃar*.
تأشيرة *taʃʃiira* /n pl *-aat*/ **1** signed endorsement (on an official or commercial document). **2** visa. *taʃʃiirit duxuul* entry visa.
مؤشّر *muʃaʃʃir* /n pl *-aat*/ pointer, indicator. *muʃaʃʃir is-surɛa* the speedometer needle.
اتأشّر *ʔitʃaʃʃar* /vi/ (impersonal) passive of *ʕaʃʃar*. *ʕil-gawaab itʃaʃʃar ɛalee* the letter was given a signed ruling. - iva *mitʃaʃʃar*.

ء ش ر ب
إيشارب *ʕiʃarb* <Fr *écharpe*> /n pl *-aat*/ woman's scarf.

ء ش ر ج ى see ش و ر [1]: *ʕaʃargi, ʕiʃargi*

ء ش شِ
إش *ʕiʃʃ* **1** /interj/ exclamation of friendly admiration ≈ wow! my! **2** *ʕil-ʕiʃʃ* exclamation of wonder, used hypothetically ≈ whatever would have happened? *wil-ʕiʃʃ' baɋa law wişlit w-ana naayim* whatever would have happened, then, if she'd arrived while I was asleep?

ء ش ف ر
أشفر *ʕaʃʃar* /vt/ *[slang]* to relieve (s.o.) of (all) money. *ʕaʃʃart iz-zibuun* I took the customer to the cleaner's. - also *ɋaʃʃar*. - vn *ʕaʃʃara*; ava/pva *miʃaʃʃar*.
اتأشفر *ʔiʃtaʃʃar* /vi/ passive of *ʕaʃʃar*. - iva *mitʃaʃʃar*.

ء ش ك ب ب
أشكبّة *ʕuʃkubba* <It *scopa*> /n/ *[naut]* broom, mop. - also *fukubba*.

ء ش ك ر -
إشكرمة *ʕiʃkarma* <Gr *skarmos*> /n pl *-aat*/ *[naut]* tholepin. - also *fikarma*.

ء ش ك و ط
أشكوطة *ʕaʃkuuṭa* (also *ʕiskuuta*) <It *scotta*> /n pl *-aat*/ *[naut]* sheet (of a sail).

ء ش ل
أشلان *ʕaʃlaan* /adj */ bankrupt.
أشّل *ʕaʃʃil* **1** /vt/ to leave (s.o.) penniless, clean out. *ʕil-ḥaraami ʕaʃʃil il-beet min kull-u* the thief stripped the house bare. **2** /vi/ to run out (of money, possessions etc.). *ma xalaaş ʕaʃʃil min kull' fluus-u* he's completely cleaned out. - vn *taʃʃiil*; ava/pva *miʃaʃʃil*.
اتأشّل *ʔitʃaʃʃil* /vi/ to become destitute. *ʔitʃaʃʃilt' min kull' ḥaaga* I've got nothing left to my name. - ava *mitʃaʃʃil*.

ء ش ل ا ل
إشلال *ʕiʃlaal* <Copt> /interj/ *[Chr]* let us pray! (said by the priest to the congregation). - also *ʕiʃliil*.

ء ش ل ى ل
إشليل *ʕiʃliil* <Copt> /interj/ *[Chr]* let us pray! (said by the priest to the congregation). - also *ʕiʃlaal*.

ء ش م ع - see ء ى ش: *ʕiʃmiɛna*

ء ش ى [1]
إشى *ʕiʃi* particle used **1** in listing a series. *ɛandu*

mimma gamiiɛ-u ʕifi gibna w-ʕifi zatuun wi-ʕifi sardiin ma-tɛidd^{i}-ʃ he has something of everything - cheese, olives, sardines, and what have you. **2** repeated, as a set phrase to introduce a riddle. *ʕifi ʕifi xarab-ha w-mifi* ≈ guess who? guess who? he ruined it and left (i.e., guess who did that). **3** with the meaning 'something' in the rhyme: *xuff^{i} b-ʕifi tibqa ʕifi - xuff^{i} balaaf tibqa walaa-ʃ* enter with something and you'll be something, enter with nothing and you'll be nothing.

ء ش ى ^{2}
أوشيّة *ʕufiyya* <Gr *eukhê*> /n pl *ʕawaafi/ [Chr]* prayer, intercession. *ʕufiyyit il-marḍa* prayer for the sick.

ء ش ى د
أشيدة *ʕafiida* /n/ cloth grip on a carding bow.

ء ص ص
أصيص *ʕaṣiiṣ* /n pl *ʕuṣuṣ*/ flowerpot.

ء ص ط ا see ء س ط ا : *ʕusṭa*

ء ص ط ب ل
إصطبل *ʕiṣṭabl* /n pl *-aat*/ stable.

ء ص ط ن ج
أصطنج *ʕuṣṭung* <T *ustunç*> /n pl *-aat*/ draughtsman's case of drawing instruments. - also *ʕistung*.

ء ص ف
أصف *ʕaṣaf* <Copt> /n/ caper bush, caper root.

ء ص ل ^{1}
أصل *ʕaṣl* /n pl *ʕuṣuul*/ **1** origin, source. *da min ʕaṣl^{i} yunaani* it's of Greek origin. *kaan ʕaṣl-u baḥḥaar* he was a sailor originally. *ʕil-ḥikaaya di laha ʕuṣuul min ʕayyaam il-ʕingiliiz* this business goes back to the days of the British. ‖ *kaddaab fi-ʕaṣl^{i} wiff-u* a barefaced liar. **2** lineage, breeding, stock, pedigree. *ɛandu ʕaṣl* he's a decent sort. *ɛamal bi-ʕaṣl-u* he acted according to the dictates of his breeding. *ʕaṣl-ak fiɛl-ak* you are what you do. *ɛal-li ɛan ʕaṣl-u w-faṣl-u* he told me all about himself. ‖ *ma-luu-ʃ ʕaṣl* he doesn't know how to behave. **3a** original copy. *ʕiktib-li ʕaṣl^{i} w-ṣurteen* type me an original and two copies. *ʕuṣuul maktuuba bil-yadd* hand written original(s). **3b** *[phot]* negative. — /conj/ **4** the fact is that, because. *ma-yiɛraf-ʃ^{i} yiɛmil ḥaaga ʕaṣl-u ɣabi* he can't do anything because he's stupid. *ʕaṣl-a-ha ɣeer il-banaat dool* the fact is that she's not like those girls. *ʕaṣl-u-hum ɛamliin gidɛaan* the fact is that they're just acting tough. — *ʕuṣuul* /pl n/ **5a** foundations, fundamentals. ‖ *ʕil-ʕuṣuul ʕil-ʕarbaɛa* the four foundations of Muslim jurisprudence. **5b** rules. *ʕuṣuul il-liɛb* the rules of the game. **5c** code of social conduct, correct behaviour. *kull^{a} ḥaaga bil-ʕuṣuul* there's a proper way to do everything. *kaan il-ʕuṣuul il-waaḥid yixlaṣ min waḥda zayy^{i} di biṭ-ṭalaaq* the proper thing would have been to get rid of such a woman by divorce. ‖ *ʕibn il-ʕuṣuul* one of good breeding. **6** *[finan]* assets. *ʕuṣuul wi-xuṣuum* assets and liabilities. **7** *[hort]* stock.

¶ *ɛala ʕaṣl-u* or *ɛala ʕuṣuul-u* as it really should be, as in *kufari ɛala ʕaṣl-u* (or *ɛala ʕuṣuul-u)* properly made kushari, kushari the way it ought to be done. - *ʕaṣlan* /adv/ (1) originally, initially. (2) basically, fundamentally. - *min ʕaṣl-u* /adv/ categorically (not), absolutely (not). *ma-ʃuft-uu-ʃ min ʕaṣl-u* I have not seen him at all. - *fil-ʕaṣl* /adv/ originally.

أصلى *ʕaṣli* /adj */ **1** original. *ʃihaadit il-milaad il-ʕaṣliyya* the original birth certificate. **2** authentic, genuine. *gild^{i} ʕaṣli* genuine leather. *ṣaluun mudhab mil-ʕaṣli* a genuine gilt sitting-room suite. ‖ *ʕaṣli ya gaaz [vendor's cry]* paraffin free of impurities!

أصولى *ʕuṣuuli* /adj/ correct, proper. *ɣaagil ʕuṣuuli* an upright man.

أصولجى *ʕuṣulgi* /n pl *-yya/ [derog slang]* one who conforms with established patterns of social conduct.

أصالة *ʕaṣaala* /n/ genuineness, authenticity. *ʕaṣaalit il-fannaan fi-ʃuɣl-u* the artist's genuineness in his work.

أصيل *ʕaṣiil* /adj pl *ʕuṣala/* **1** of good stock, well-bred, well-born. *ḥuṣaan ʕaṣiil* a pure-bred stallion. *xud il-ʕaṣiila wi-law kaanit ɛal-ḥaṣiira [prov]* marry a well-born woman no matter how poor she may be. **2** genuine, authentic.

مؤصّل *miʕaṣṣal* /adj */ = *ʕaṣiil*.

اتأصّل *ʔitʕaṣṣal* /vi/ to take root. *ʕil-fikra tʕaṣṣalit fi-dmaaɣ-i* the idea became rooted in my mind. - ava *mitʕaṣṣal, mutaʕaṣṣil↑*.

استأصل *ʔistaʕṣal↑* **1** /vt/ to remove completely, extirpate. *laazim nistaʕṣil il-ɛanaaṣir il-haddaama* we must eliminate destructive elements. *ʔistaʕṣal il-waram* he removed the tumour. **2** to select for good origin. ‖ *ʔistaʕṣal wi-tgawwiz* find yourself someone from a good family and marry her. — /vi/ **3** to become chronic. *ʕil-maraḍ istaʕṣal fii* the disease became chronic in him. *ʕik-kizb istaʕṣal fii* he became a chronic liar. - vn *ʔistiʕṣaal*; ava *mistaʕṣil, mistaʕṣal, mustaʕṣil*; pva *mustaʕṣal*.

ء ص ل [2]
أصل ʕaṣal /coll n/ python(s).
أصلة ʕaṣala /unit n, pl -aat/ a python.

ء ص ن ص
أصانص ʕaṣanṣ <Fr> /n pl -aat/ essence, concentrate. *ʕaṣanṣ' yasmiin* jasmine essence.

ء ص ن ص – see ء س ن س : *ʕaṣanṣeer*

ء ض ا ح
أضاحة ʕaḍaaḥa↓ *[women]* exclamation of concern or mild disapproval. *ya di l-ʕaḍaaḥa* what a sorry state of affairs!

ء ض ل ى
أضليا ʕaḍalya <Adalia (in Turkey)> /n/ common lemon (as distinct from the Egyptian lemon).

ء ط ا ل ى see ء ط ل ى : *ʕiṭaali*

ء ط ر
إطار ʕiṭaar↑ /n pl -aat/ **1** tyre. *ʕiṭaraat tiyublis* tubeless tyres. **2a** frame. *ʕiṭaar mudhab* gilt frame. **2b** framework, setting. *ʕil-mas ʕala laazim titfihim fi-ʕiṭar-ha ṣ-ṣaḥiih* the question must be viewed in its proper setting.
أطّر ʕaṭṭar /vt/ *[arch]* to frame, make a border. *ʕaṭṭaru l-ḥeṭaan* they framed the walls with a border. - vn *taʕṭiir*; ava/pva *miʕaṭṭar*.
اتأطّر ʔitʕaṭṭar /vi/ *[arch]* to be framed. - iva *mitʕaṭṭar*.

ء ط ر ب –
أطربنش ʕaṭrabanʃ /n pl -aat/ *[coarse]* large penis, chopper.

ء ط ر م – see ء ت ر م

ء ط ر ن ج see ء ت ر ن ج

ء ط ر و ن
أطرون ʕaṭruun /n/ natron. - also *naṭruun*.
أطرونة ʕaṭruuna /pl -aat/ unit noun of *ʕaṭruun*.

ء ط ل س [1]
أطلس ʕaṭlas[1] /n pl ʕaṭaalis/ atlas.
أطلسي ʕaṭlasi /adj/ Atlantic. *ʔil-muḥiiṭ ʔil-ʕaṭlasi* the Atlantic Ocean. *ʔil-ḥilf il-ʕaṭlasi* N.A.T.O.

ء ط ل س [2]
أطلس ʕaṭlas[2] /n/ satin.

ء ط ل ى
إيطاليا ʔiṭalya /prop n/ Italy. ‖*ḥarb' ʔiṭalya* percussion caps.
إيطالي ʔiṭaali **1** /adj/ Italian. **2** /n */ an Italian.
طلياني ṭalyaani, ṭalyaani /pl ṭalyaan, ṭalyaan, ṭalayna, ṭalayna/ **1** /adj/ Italian. – /n/ **2** an Italian. **3** /no pl/ the Italian language.

ء ط م ب – see ء ت م ب –

ء ع د see ع و د : *ʕaɛid*

ء ع ز ن
إعزن ʔiɛzinn /conj/ as if. *xallii-na nitfi n-nuur ʔiɛzinnina mif mawgudiin* let's switch off the light, as if we were not in. *ʔiftaɣali kwayyis ʔiɛzinni mawguud* work (as) well as if I were here.

ء ع و ق ع
أعوقع ʔaɛuuqaɛ onomatopoeia for the sound of an old car-horn. *ɛarabiyya mhakkaɛa ʔaɛuuqaɛ yaɛni xurda* a worn out 'honk-honk' car, that's to say a wreck.

ء غ ا
أغا ʔaɣa, ʔaɣa <T *ağa*> /n pl -waat, -waat/ *[obsol]* title of palace eunuchs and other high ranking civil and military officials of the Ottoman empire. ‖ *ʔayyaam il-ʔaɣawaat* (the days of the Turks and Mamelukes) ≈ the days of the tyranny.

ء غ ا س see ص ا غ [1] : *ṣaɣaquul ʔaɣaasi*

ء غ س ط س
أغسطس ʔaɣusṭus /n/ August.

ء غ م ى –
إيغومينوس ʔiɣumeenus <Gr *hêgoumenos*> /n/ *[Chr]* hegumen. - also *hiɣumeenus*.

ء غ ن س –
أغنسطس ʔuɣnusṭis <Gr *anagnôstês*> /n */ *[Chr]* reader of lessons during a service.

ء ف خ ر –
إفخارستيا ʔifxaristiya <Gr *eukharistia*> /n/ *[Chr]* eucharist.

ء ف ر ت –
أفرتيرة ʔufirtiira <perh Fr> /n pl -aat/ *[mus]* overture.

ء ف ر ق
إفريقيا ʕafriqya, ʕifriqya /prop n/ Africa.
إفريقى ʕafriiqi, ʕifriiqi /adj */ African.

ء ف ر ن ج see also ف ر ن ج
أفرنج ʕafrang /pl n/ (western) foreigners, westerners.
أفرنجى ʕafrangi /adj/ European, western-type. *magalla frangiyya* a western magazine. || *ʕit-tariix il-ʕafrangi* the Gregorian system of dating. - *kabineeh ʕafrangi* pedestal lavatory. - *ɛeef ʕafrangi* white bread made in stick-loaves about 30 cm. long. - *furn afrangi* bakery where *ɛeef ʕafrangi*, cakes and biscuits are made and sold. - *gallabiyya frangi* a men's galabiya with turn-down collar and button-up cuffs. - /adverbially/ *da laabis ʕafrangi* he is dressed in western clothes.

(ء ف ر و ل)
أوفرول ʕufarool[1] <Engl> /n/ overhaul (of a vehicle, piece of equipment etc.)
أوفرول ʕufarool[2] <Engl> /n pl *-aat*/ overall.

ء ف ر ى ز
أفريز ʕafriiz /n pl ʕafariiz/ <prob Fr> **1** frieze. **2** decorated edging (on furniture).

ء ف س ت
أوفست ʕufsit <Engl> /n/ *[print]* offset.

ء ف س ى د
أوفسايد ʕufsaayid <Engl> /adj invar/ *[soccer]* off-side.

ء ف ع see ف ع ى : ʕafɛa

ء ف غ ن
أفغانستان ʕafɣanistaan, ʕafɣanistaan /prop n/ Afghanistan.
أفغانى ʕafɣaani, ʕafɣaani **1** /adj/ Afghan. **2** /n */ an Afghan.

ء ف ف
أفّ ʕuff /interj/ **1** exclamation of exasperation. *ʕuff[i] min di-l-ɛiiʃa* how awful life is! **2** *[coarse]* one of the sounds of pleasure made by a woman during sexual intercourse.
إفّ ʕiff /interj/ exclamation of disgust (especially at a bad smell). *ʕiff[a] ɛar-riiḥa di* what a disgusting smell!
اتأفّف ʔitʕaffif /vi/ to grumble, express anger, displeasure or disgust. - vn *taʕaffuf↑*; ava *mitʕaffif*.

ء ف ق
أفق ʕufuq↑ /n pl ʕafaaq/ **1** horizon. *ʕafaaq biɛiida* distant horizons. **2** range of vision. || *raagil waasiɛ il-ʕufuq* a tolerant (broad-minded) man. - *ʕaxuu ʕufuq-u dayyaq* his brother is narrow-minded.
أفقى ʕufuqi, ʕufqi↑ /adj/ horizontal.
أفّاق ʕaffaaq↑ /n */ swindler.

ء ف ك ا ت
أفوكاتو ʕavukaatu (also ʕavukaadu[1]) <It *avvocato*> /n pl ʕavukatiyya, ʕavukadiyya/ lawyer, advocate. - also *ʕabukaatu, ʕabukaadu*.

ء ف ك ا د [1]
أفوكادو ʕavukaadu[2] <Sp *avocado*> /coll n/ avocado tree(s), avocado pear(s). - also *ʕabukaadu*.
أفوكادوهاية ʕavukaduhaaya /n pl *-aat*/ an avocado pear. - also *ʕabukaduhaaya*.

ء ف ك ا د [2] see ء ف ك ا ت : ʕavukaadu[1]

ء ف م ى –
أفوميتر ʕavumiitar <Engl *A.V.O. meter*> multimeter.

ء ف ن د –
أفندى ʕafandi <T *efendi*> /n pl *-yya, ʕafandiyyaat*/ **1** Egyptian man in western clothes. **2** title of, and form of address or reference to, an Egyptian man from the middle class. *rafaad ʕafandi* ≈ Mr. Rashad. *ya-fandi* Sir! *ya ʕafandi* or *ya ʕafandii-na* a pompous and condescending form of the preceding. *ʕil-ʕafandi btaaɛ-i* my husband. || *ʕafandii-na* title of the former Khedives of Egypt. **3** title of, and form of address or reference to, a school-teacher.
أفندم ʕafandim <T *efendim*> **1** /n/ **1a** form of address to a middle-class Egyptian of either sex. **1b** *[mil]* form of address to a superior officer. **2** interrogative interjection requesting the repetition of something not properly heard ≈ excuse me? I beg your pardon?

ء ف ن س
أفانس ʕavans <Fr *avance*> /n/ **1** *[elec]* overcharging. **2** *[sport]* lead, head start (witn which a weaker player is allowed to begin). *lik fi-kull[i] geem xamas nuqaṭ ʕavans* you can begin each game with five points' lead.

ء ف ى ز
أفيز ʕafiiz /n pl ʕafaayiz/ bonding clip.

ء ف ى س
أوفيس ʃufiis↑ <Fr *office*> /n pl *-aat*/ pantry, servants' room.

ء ف ي ش
أفيش ʃafiif <Fr *affiche*> /n pl *-aat*/ poster.

ء ف ى ن
أفيون ʃafyuun /n/ opium.
أفيونة ʃafyuuna /n/ **1** /pl *-aat*/ unit noun of *ʃafyuun*. ‖ *ʃibn' ʃafyuuna* an opium addict. - *ʃil-ʃafyuuna ţilʕit ʕalee* he became very ratty. **2** addiction, susceptibility. *ʃil-baḥr' ʃafyuuna ʕandi* the sea is an addiction of mine.
أفيونجى ʃafyungi /n pl *-yya*/ opium addict.
أفين ʃafyin /vi/ **1** to take opium. **2** to fall under the influence of opium. - vn *ʃafyana*; ava *miʃafyin*.

ء ف ى ه
إفيه ʃifeeh <Fr *effet*> /n pl *-aat*/ **1** *[cin]* effect. **2** side (in billiards). *ʃiddii-ha ʃifeeh ʃimaal* put left side on it.

ء ق ت see و ق ت : *muʃaqqat*

ء ق ح و
أقحوان ʃuqḥuwaan↑ /n pl *-aat*/ daisy.

ء ق ق see و ق ق

ء ق ل م
إقليم ʃiqliim↑ /n pl *ʃaqaliim*/ region.
إقليمى ʃiqliimi↑ /adj/ regional.
اتأقلم ʃitʃaqlim↑ /vi/ to become acclimatized. - vn *taʃaqlum*; ava *mitʃaqlim*.

ء ق ن و م
أقنوم ʃuqnuum <Syr> /n pl *ʃaqaniim*/ *[Chr]* any one of the Persons of the Trinity.

ء ق و ن
إيقونة ʃiquuna <Gr *eikôn*> /n pl *-aat*/ *[Chr]* **1** icon. **2** religious medal. - also *ʠuuna*.

ء ك ت ا ف
أكتاف ʃuktaaf <Fr> /n pl *-aat*/ *[mus]* octave.

ء ك ت و -
أكتوبر ʃuktoobar /n/ October.

ء ك ت ى ن
أكتين ʃuktiin <Engl> /n/ *[chem]* octane.

ء ك د [1]
أكادة ʃakaada /n/ astonishment, dismayed incredulity. *ʃamma ʃakaada ʕaleek* what a most unreasonable person you are! - /adverbially/ *ʃil-ʃakaada* amazingly and infuriatingly, as in *ʃil-ʃakaada ʃinnaha bi-tḥaawil tiriżni* the fantastic thing is that she's trying to make me angry, *ʃil-ʃakaada ʃinnu ʁayyar raʃy-u fagʃa* the infuriating thing is that he suddenly changed his mind. ¶ *bil-ʃakaada* /adv/ out of spite, contrarily. *miʃ ḫ-afrab bil-ʃakaada fiik* I am not going to drink just to spite you. See further under ك ى د

ء ك د [2]
أكيد ʃakiid **1** /adj/ certain, established. *da xabar ʃakiid* this is certain knowledge. **2** /adv/ for sure, undoubtedly. *ʃakiid ḫa-yiksabu l-ḫarb* there's no doubt that they will win the war.
أكّد ʃakkid **1** /vt/ to verify. *ʃana baaʕit waaḥid yiʃakkid lina l-xabar-da* I've just sent off someone to have this piece of news checked. **2** /vi/ to be emphatic. *ʃakkidt-i-lu ʃinni b-aquul il-ḥaqq* I assured him that I was telling the truth. *ʃakkidtᵃ ʕalee yḫarrar il-istimaraat* I impressed on him that he should fill in the forms. - vn *taʃkiid*; ava *miʃakkid*; pva *muʃakkad*.
اتأكّد ʃitʃakkid /vi/ **1** to be verified. **2** to be certain, be in no doubt. *ʃana mitʃakkid min ḳida* I am certain of that. *laazim nitʃakkid minnu* (1) we must be sure about him. (2) we must make sure by asking him. - vn *taʃakkud↑*; ava *mutaʃakkid*; ava/iva *mitʃakkid*.
استأكّد ʃistiʃakkid↓ /vi/ to be quite sure. *laazim ʃastiʃakkid min innaha kwayyisa* I must be certain it is O.K. - ava *mistiʃakkid*.

ء ك د ى م
أكاديمى ʃakadiimi↑ <perh Fr> /adj */ academic. *dirasaat ʃakadimiyya* academic studies. *raagil ʃakadiimi* an academic, a scholar.

ء ك ر
أكرة ʃukra /n pl *ʃukar, ʃukraat*/ knob or handle (particularly of a door or window). ‖ *bi-ylammaʕ ʃukar* (1) he's an eavesdropper. (2) he's a toady.

ء ك ر ب -
أكروبات ʃakrubaat <perh Fr *acrobatie*> /n/ acrobatics. *laaʕib il-ʃakrubaat* acrobat.
أكروباتى ʃakrubaati /adj */ acrobatic.

(ء ك ر د -)
أكرداش ʃakurdaaf <Fr *accordage*> /n/ tuning (of a piano).

أكردير ʔakurdeer <Fr *accordeur*> /n pl *-aat*/ piano-tuner.
أكرديون ʔakurdiyoon <Fr *accordéon*> /n pl *-aat*/ accordion.

ء ك ز ي م
أكزيما ʔikziima, ʔakziima <Engl> /n/ eczema.

ء ك ز ي –
أوكازيون ʔukazyoon <Fr *occasion*> /n pl *-aat*, ʔukazyonahaat/ sale (at reduced prices).

(ء ك س)
أكس ʔaks <Fr *axe*> /n pl *-aat*/ axle.
إكس ʔiks <perh Engl> /fem n, pl *-aat*/ **1** the letter X. **2** *[euphem]* menses. – /masc n/ **3** express (train). – /adj invar/ **4** quick, fast. - /adverbially/ *rawwaḥ ɛal-beet ʔiks* he went home fast.

ء ك س ب –
إكسبريس ʔiksibrees <Engl> /n pl *-aat*/ express (train).

ء ك س ج –
أكسيجين ʔuksijiin <Fr *oxygène*> /n/ oxygen. ‖*mayyit ʔuksijiin* aqueous solution of hydrogen peroxide.

ء ك س د
أكسيد ʔuksiid <Fr> /n pl *ʔakasiid*/ oxide.
أكسديه ʔuksideeh <Fr *oxydé*> /adj invar/ oxydized.
أكسد ʔaksid /vt/ to oxydize. ‖*muxx-i mʔaksid* my brain's a bit rusty. - vn *ʔaksada*; ava/pva *miʔaksid*.
اتأكسد ʔitʔaksid /vi/ to become oxydized. -vn *taʔaksud*↑; ava *mitʔaksid*.

ء ك س ر
إكسرا ʔiksira↓ <perh It *extra*> /adj invar/ first-class. *baṭṭiix ʔiksira* excellent water-melons.

ء ك س س –
أكسسوار ʔaksiswaar, ʔiksiswaar <Fr *accessoires*> /coll n, pl *-aat*/ **1** spare part(s). **2** prop(s) (in theatre etc.). **3** accessory or accessories (in fashion).

(ء ك س ل –)
أكسليتير ʔaksiliteer or ʔiksiliteer <Fr *accélérateur*> /n pl *-aat*/ accelerator.
إكسليفون ʔiksilifoon <perh Fr> /n pl *-aat*/ xylophone.

ء ك س و
أكسو ʔuksu, ʔiksu <Gr *eksô*> /interj/ *[joc]* out with you! run along!

ء ك س ى
أكسى ʔuksi <perh Engl> /adj/ oxy-acetylene.

ء ك س ى ر
إكسير ʔuksiir, ʔiksiir /n pl *ʔakasiir*/ elixir. *ʔuksiir il-ḥayaah* the elixir of life.

ء ك س ى –
أكسيوس ʔaksiyuus <Gr *aksios* worthy> *[Chr]* **1** /interj/ call repeated three times by Coptic congregations. **2** /n/ action of making such a threefold call.

ء ك ص د –
إكصيدام ʔikṣidaam <poss Fr *contre- accidents*> /n pl *-aat*/ bumper, fender.

ء ك ك و ر
أكور ʔakkoor <Fr *accord*> /n pl *-aat*/ *[mus]* harmony.

ء ك ل
كل، أكل *kal, ʔakal (yaakul)* /vt/ **1** to eat, consume. *nifs-i ʔaakul jilaati ktiir* I feel like eating a lot of ice cream. ‖*ʔil-ɛarabiyya di b-taakul banziin* this car just eats up petrol. - *kul ɛeef* don't make trouble for yourself! - *ʔana kalt^{i} maɛaa ɛeef wi-malḥ* I have broken bread with him, a bond exists between us. - *kal fi-rooḥ-u* to simmer (with pent-up anger etc.). - *kal laḥm(-u)* to exploit (s.o.). - *kal muxx(-u)* to take (s.o.) in, persuade (s.o.) against his better judgement. - *ʔin-naas kalit wiff-u* he was made to feel small. - *kal bi-ɛaql-i ḥalaawa* he sweet-talked me (into s.th.). - *bi-yakul-ha walɛa* he is unscrupulous. - *ʔil-bint^{a} ɛanduku kuluu-ha* you've got the girl; to hell with you and her! - *kal il-bint [coarse slang]* he had the girl. - *ḥa-yaakul ḥitta min ...* it is very becoming to, as in *ʔil-fustaan ḥa-yaakul ḥitta minnaha* the dress suits her extremely well. **2** to eat away, wear down, corrode. *ʔil-ḥagar bi-yaakul il-mayya btaaɛit il-muus* the whetstone wears down the edge of the razor. *ʔil-makwa kalit il-kumm* the iron scorched the sleeve. *ʔil-ɑamiiṣ kal-u l-ɛaraɑ* the shirt was rotted with sweat. *ʔil-baruuma b-taakul iṣ-ṣaag* rust is corroding the iron sheeting. **3a** to appropriate. *bi-yaakul ʔamwaal il-yataama* he takes the orphans' money. ‖*bi-yaakul maal in-nabi* ≈ he'd sell his own grandmother. - *kal il-gaww* he stole the limelight. - *kal ɛaɑl-a-ha* he stole her reason. **3b** to take (a piece, in a game). *kal-li faras* he took one of my knights. **4** to cause itching or irritation in. *gism-i b-yakul-ni min mayyit il-baḥr* my body is itching from the sea-water. ‖*ɑalb-(u) kal-(u)* to be wor-

ried, as in *ʔalb-a-ha b-yakul-ha ʕala-bn-a-ha* she's worried sick about her son. - *ʔiid-(u) kalit-(u) ʕala* to itch to get one's hands on, as in *ʔid-ha b-takul-ha ʕalee* she's itching to hit him, *ʔiid-u b-takl-u ʕal-filuus* he's itching to get his hands on the money. **5** to be taken in by. *ma-b-akul-fˈ min fuʏl il-bulitiika btaʕit-kum* I won't swallow any of your cant. **6** to do (s.o.) down, put one over on (s.o.). *kal-ni fil-filuus* he did me down over the money. **7** to sustain (a blow etc.). *kal ʕalʔa* he received a hiding. *kal maʔlab* he had a dirty trick played on him. **8** to subject (s.o.) to. *kalit-u ʔalameen* she gave him a slapping. — /vi/ **9** to take bribes. - vn *ʔakl, ʔakalaan*; ava *waakil*; pva *maʔkuul*.

¶ *kal ʕala* to swindle (s.o.) out of. *kal ʕalayya gneeh* he swindled me out of a pound.

أكل *ʔakl* /n/ **1** /vn/ ‖ *ʔaklᵃ ʕeef* earning one's daily bread, livelihood. - *bitaaʕ ʔakl* one who accepts bribes. **2** food. ‖ *ʔaklˈ w-marʕa w-ʔillit ʂanʕa* ≈ a life of ease, the life of Riley. **3** cards (in any card game) that can be picked up.

أكلة *ʔakla* /n pl *-aat*/ a meal.

أكلان *ʔakalaan* /coll n/ bedbug(s).

أكلانة *ʔakalaana* /unit n, pl *-aat*/ a bedbug.

مأكولات *maʔkulaat* /pl n/ foodstuffs.

أكلتى *ʔakalti* /adj pl *-yya*/ unscrupulous.

أوكل *ʔawkal* /el/ more/most delicious or palatable.

أكّال *ʔakkaal* /n pl *ʔakkaliin, ʔakkaala*/ **1** gourmet. ‖*ʈaab wi-stawa w-ʈalab il-ʔakkaal* it has ripened and calls for the eaters! (fruit vendor's cry). **2** one who takes bribes.

أكّيل *ʔakkiil* /n pl *ʔakkiila*/ one who enjoys eating, gourmand.

أكّل، وكّل *ʔakkil* or *wakkilˈ* /vt/ **1** to feed. *b-aʔakkil-hum ʔaḥsan ḥaaga* I feed them the best there is. **2** to subject (s.o.) to. *ʔakkilt-u xazuuʔ* I played a trick on him. **3** to bribe. *ʔakkilt-u ʔafaan yiʈallaʕ il-waraʔa* I bribed him to issue the document. **4** to take (a card) with a similar one (in card games). - vn *taʔkiil*; ava *miʔakkil, miwakkil*.

اتأكّل *ʔitʔakkil* = *ʔitwakkilˈ*. - iva *mitʔakkil*.

اتوكّل *ʔitwakkilˈ* /vi/ passive of *wakkilˈ*. - iva *mitwakkil*.

آكل *ʔaakil* /vt/ to share food with. *ʔaʕad yiʔakil-ha wi-ykallim-ha li-ʏayit ma wiṣlu maṣr* he kept her company with food and conversation until they reached Cairo. - vn *miʔakla*; ava *miʔaakil*.

اتآكل *ʔitʔaakil* /vi/ **1** to corrode, wear away. **2** to be partnered in eating. ‖*raagil ma-yitʔakil-f* a man with no table manners. - vn *taʔaakulˈ*; iva *mitʔaakil, mutaʔaakilˈ*.

اتّاكل *ʔittaakil* /vi/ **1** to be eaten, be consumed. **2** to be eaten away, be worn down, be corroded. **3a** to be appropriated. **3b** to be taken (of a piece, in a game). **4** to be fooled, be taken in. - iva *mittaakil*.

ء ك ل ر –

إكليريكى *ʔikliriiki* <Gr *klêrikos*> **1** /adj */ *[Chr]* pertaining to the priesthood, clerical. *kulliyya ʔiklirikiyya* theological seminary. **2** /n */ student in or graduate of a theological seminary.

ء ك ل ش –

أكلشيه *ʔaklaʃeeh* <perh Fr> /n pl *-aat*/ *[print]* cliché.

ء ك ل ى –

إكليرس *ʔikliirus* <Gr *klêros*> /coll n/ *[Chr]* clergy.

ء ك ل ى ل see ك ل ل ¹ : *ʔikliil*

ء ك م

أكم *ʔakam* /part/ exclamation of wonder ≈ how much! how many! *wi-ʔakam min if-fitiima di* how much of this sort of name-calling (I have to put up with)!

ء ك م ن ن

إكمنّ *ʔikminn* /conj/ because, since. *bi-yʏiir minni ʔikminni ngiḥt* he's jealous of me because I passed (the exam). *ʔana b-asʔal ʕalee ʔikminnu ma-rgiʕ-ʃ il-beet* I am asking about him because he hasn't come home.

ء ك ن ن

أكنّ *ʔakinn* /conj/ as if, as though. *ʔakinnu miʃ hina* as though he weren't here.

أكنّت *ʔakinnit-* /conj, with pron suff/ as if, as though. *ʕamal ʔakinnitu ma-smiʕ-ʃ* he pretended that he didn't hear.

ء ك و ا ر

أكوارى *ʔakwaari: gildˈ ʔakwaari* buffalo hide.

ء ك و ن see ء ق و ن

ء ك ى ا ب

إكياب *ʔikyaab* /n/ reed mats.

ء ل

ال *ʔil-* /def art; total assimilation of *l* to foll 'sun letters', as well as usu *g* and *k*; usu elision of hamza in context/ the.

ء ل ا
إلى ʕila /prep; w pron suff ʕilee- (1st sing ʕilayya)/ **1** to, towards. *ʕin-naas tunẓur ʕilee bi-ɛeen il-iḥtiraam* the people regard him with respect. *ɋalb-i mayyaal ʕileek* my heart is attracted to you. ‖ *wi-maa ʕila ẓaalik* and the like, as in *ʕir-rafwa wil-fasaad wi-maa ʕila ẓaalik* bribery, corruption and the like. **2**↑ to, until. *ʕila l-ɛaṣr il-ḥadiis* until the modern period. *naɋl il-loon ʕila l-ɋumaaf* the transference of the colour to the cloth. *min ... ʕila ...* from ... to ..., as in *laxxaṣ min ṣafḥit tamanya ʕila ɛafara* summarize pages eight to ten, *min sitta ʕila xamastaafar fil-miyya* from six to fifteen percent. ‖ *ʕitwaffa ʕila raḥmit illaah* he died (and went) to (rest in) God's mercy. - *ʕil-ʕamr*^{i} *ʕileek ya rabb* I submit to you, O God.
¶ *ʕila ʕaxr-u* et cetera.

ء ل ا ج
ألاج ʕalaag <T *alaca*> /n/ thick glossy striped material made of cotton and silk.
ألاجة ʕalaaga /n pl *-aat*/ **1** unit noun of *ʕalaag*. **2** kaftan made of *ʕalaag*. — /no pl/ **3** elegance, chic. *laabis ʕaaxir ʕalaaga* very well dressed. *gaww*^{i} *ʕaaxir ʕalaaga* a very chic atmosphere.

ء ل ا ى
ألاى ʕalaay <T *alay*> *[mil]* regiment. *ʕamiiralaay, miralaay* see ء م ر^{1}

ء ل ب
ألّب ʕallib /vt/ to incite. *ʕallib ɛalayya n-naas* he set people against me. - vn *taʕliib*; ava *miʕallib*.

ء ل ب س
ألباستر ʕalabastar /n/ alabaster.

ء ل ب ن ض
ألبنضة، ألبندة ʕalabanḍa <perh T *alabanda*> /n/ smooth talk, bravado. *ɛamal ɛalee ʕalabanḍa* he put one over on him. *bitaaɛ ʕalabanḍa* a glib fellow.

ء ل ب و م
ألبوم ʕalbuum <Engl> /n pl *-aat*/ album. *ʕalbuum ṣuwar* photograph album.

ء ل ت
ألّت ʕallit /vi/ to make fun, laugh (at s.o.). *baṭṭal tiʕallit ɛalee* stop making fun of him. - vn *taʕliit*; ava *miʕallit*. See further under م ء ل ت

اتألّت ʕitʕallit /vi/ **1** = *ʕallit*. **2** (impersonal) passive of *ʕallit*. *ʕana mif min illi b-yitʕallit ɛaleehum* I am not the type to be laughed at. - ava/iva *mitʕallit*.

ء ل ج see ء ل ا ج: *ʕalaag, ʕalaaga*

ء ل ج ى
أولوجيّة ʕawlugiyya, ʕulugiyya <Gr *eulogia*>: *luqmit il-ʕulugiyya [Chr]* blessed bread.

ء ل س
ألّس ʕallis /vi/ to behave or speak disparagingly. *yiḥibb*^{i} *yʕallis ɛala n-naas* he likes to tell disparaging tales about people. - vn *taʕliis*; ava *miʕallis*. see further under م ء ل س
اتألّس ʕitʕallis /vi/ **1** = *ʕallis*. **2** to be made fun of, be disparaged. - ava/iva *mitʕallis*.
اتآلس ʕitʕaalis = *ʕitʕallis*. - ava/iva *mitʕaalis*.

ء ل س ط
أليسطه ʕalisṭa <perh T *aleste*> /adj invar/ excellent, tip-top. *fuxl*^{i} *ʕalisṭa* fine work. *raagil ʕalisṭa* an excellent man. *ʕil-ʕakl istawa w-baɋa ʕalisṭa* the food was cooked to perfection.

ء ل ف^{1} see also ل و ف^{1} and و ل ف^{1}
ألف ʕilif(a), ʕalaf(a) /vt/ to get used to, be on intimate terms with. *kull*^{i} *waaḥid bi-yiʕlaf illi ẓayyu* everyone likes his own kind. - vn *ʕilf, ʕulf, ʕulfa*; ava *ʕaalif*; pva *maʕluuf*.
ألفة ʕulfa /n/ intimacy. *benhum ʕulfa* they're intimate.
ألوف ʕaluuf /adj */ intimate, sociable.
أليف ʕaliif **1** /adj/ tame. **2** /n pl *ʕullaaf*/ sweetheart, darling.
ألّف ʕallif^{1} /vt/ **1** to form. *ʕallif il-wizaara taḥt*^{i} *ryast-u* he made up the cabinet under his leadership. **2a** to write. *huwwa bi-yʕallif fil-iqtiṣaad* he writes on economics. *ʕil-waaḥid laazim yiʕallif-lu ktaab yitraɋɋa bii* one has to write a book that will get one promoted. **2b** to compose (lyrics, music etc.). **3** to concoct, make up. *ʕallif-lu ʕayy*^{i} *sabab* make up any old reason for him! - vn *taʕliif*; ava *miʕallif*.
مؤلّف *muʕallif* /n */ **1** author. **2** composer.
مؤلّف *muʕallaf*↑ /n pl *-aat*/ **1** literary work. **2** musical composition.
اتألّف ʕitʕallif /vi/ passive of *ʕallif*. - iva *mitʕallif*.
اتآلف ʕitʕaalif↑ /vi/ to become good friends, become intimate. *fil-muɛaskar if-fubbaan bi-yitʕalfu w-yiɛrafu baɛḍ* at camp the young people become friends and get to know one another. - vn *taʕaaluf*; ava *mitʕaalif*.

ء ل ف [2]
ألف ʔalf **1** /num, pl ʔalaaf/ a thousand. *ʔalf' w-tultumiyya* one thousand three hundred. *xamast alaaf* five thousand. **2** /n pl *ʔalaaf, ʔuluuf*, pl of abundance *ʔalafaat*/ (unit of a) thousand. *ʔalaaf* (or *ʔuluuf*) *in-naas* thousands of people. *rubɛumiyya mil-ʔalf* four hundred in a thousand. ‖ *ʔalf' waraaha ʔuluuf* ≈ money breeds money. **3** *ʔil-ʔalf* /adj invar/ the thousandth.
ألفى *ʔalfi* /adj */ millennial. *ʔil-ɛiid il-ʔalfi* the millennial anniversary.
ألفيّة *ʔalfiyya* /n pl *-aat*/ **1** poem of a thousand distiches. **2** (also *ʔalfawiyya*) prayer string of ninety-nine beads.
ألفاوى *ʔalfaawi* /adj/ millenial.
ألفويّة *ʔalfawiyya'* /n pl *-aat*/ **1** (also *ʔalfiyya*) prayer-string of ninety-nine beads. **2** thousandfold recitation of the *fatḥa* (q.v.)
ألف *ʔalif* /fem n/ **1** first letter of the Arabic alphabet. *ʔil-ʔalif bih* the alphabet. ‖ *zayy il-ʔalif* orderly, like clockwork. - *ʔil-ʔalif tigurr il-bih* one thing leads to another. - *la yiɛraf il-ʔalif min il-madna* (or *min kuuz id-dura*) he's illiterate. **2** *[chem]* symbol for oxygen.
ألّف *ʔallif*[2] /vi/ to reach a thousand. *bi-yitqaal ʔinn is-sikooya ʃagara miɛammara bi-tʔallif* it is said that the sequoia is a tree that lives a thousand years! - vn *taʔliif*; ava *miʔallif*.
مئلّف *miʔallif* /adj */ extremely aged, as old as Methuselah.

ء ل ف [3]
ألفة *ʔalfa* <perh T *kalfa*> /n pl *-waat*/ monitor (in a school class).
ألفويّة *ʔalfawiyya*[2] /n/ rank of monitor, monitorship.

ء ل ف ر -
ألفرنكة *ʔalafranka, ʔalafranka* <prob It *alla franca*> **1** /adj invar/ Western-like. *ɛamliin zayy in-naas il-ʔalafranka* they behave like western people. **2** /n/ Western style (of behaviour, dress etc.). *qulu-lha tbaṭṭal fuxl il-ʔalafranka* tell her to stop behaving like a westerner (or in the western style).

ء ل ف ن س
ألفونس *ʔalfuns* <prop n *Alphonse*> /coll n/ Alphonse mango(es). - also *funs*.

ء ل ك ت -
إلكترون *ʔiliktiroon* <Engl> /n pl *-aat*/ electron.
إلكترونى *ʔiliktirooni* /adj/ electronic.
إلكترونيّات *ʔiliktironiyyaat* /pl n/ electronics.

ء ل ك ز -
ألكزندرين *ʔalikzandiriin* /n/ alexandrite.

ء ل ل
إل *ʔill* <Engl *L*> /adj invar/ L-shaped.

ء ل ل ا [1]
إلاّ *ʔilla'* **1** /prep/ except, but. *ma-bi-yḥibb'-f ʔilla nafs-u* he loves nobody but himself. *ma-fii-f balad bi-tiṣrif lil-muwaẓẓaf ik-kibiir ɛarabiyya ʔilla ʔiḥna* we're the only country that gives cars to top officials. **2** particle signalling **2a** a rhetorical question that imputes ingenuousness to the previous speaker. *ʔilla mif fahmaa-k* what do you mean, she doesn't understand you (of course she does)? *maṣlaḥt-u ʔeeh.* - *ʔilla ʔeeh* 'What is his interest?' 'Surely you don't have to ask what (that is)!' *ʔilla ʔana raayiḥ feen* what do you mean, where am I going (you know very well)? **2b** a sudden and unexpected development. *ʔilla yiggawwiz* of all things, he should go and get married! *w-ana qaaɛid fil-beet ʔilla wi-ṭabb' ʔabuu-ha w-ʔaxuu-ha* while I was sitting in the house, lo and behold her father and brother suddenly appeared!
¶ *ʔilla wi-* /conj/ (1) except that, as in *m-amʃii-ʃ ʔilla w-maɛaaya munfaax* I never go off without a bicycle pump. (2) that (in contexts of oaths), as in *ḥilif bi-yamiin iṭ-ṭalaaq ʔilla w-yibṭaḥ nafuux il-ḥakam* he swore by an oath of divorce that he would smash the referee's head. - *ʔilla ʔiza* /conj/ unless, as in *miʃ mumkin tirawwaḥ ʔilla ʔiza kaan il-mudiir miwaafiq* you can't go home unless the director agrees. - *ḥakam ʔilla* to insist, as in *ʔumm-u ḥakamit ʔilla yruuḥ il-madrasa* his mother insisted that he go to school.
ألاّ *ʔalla* /interj/ now then, come on. *ʔalla qul-li ʔeeh raʔy-ak fil-mawḍuuɛ* come! tell me your opinion on this subject.

ء ل ل ا [2] see ء ل ه: *ʔalla, ʔilla*[2]

ء ل ل او see ء ل ه: *ʔallaawi*

ء ل ل ت ى
التى *ʔillati* feminine relative pronoun: *bi-llati ʔaḥsan* (by the better way) ≈ or else! as in *ṭallaɛ il-filuus bi-llati ʔaḥsan* hand over the money or else!

ء ل ل ذ ى see ء ل ل ز ى

ء ل ل ز ى
الذى *ʔillazi* masculine relative pronoun: *wi-llazi minnu*

and so on, as in *ʕif-ʃaay wig-gurnaan wi-llazi minnu* the tea and the paper and so on.
الّذين *ʕillaziina* plural relative pronoun: *ʕibn illaziina* /fem *bint illaziina*, pl *wilaad illaziina*/ ≈ son of a ...!

ء ل ل ى
اللى *ʕilli* /rel pron/ **1** who, which, that. *ʕis-sitt illi sakna ɣan-naṣya* the woman who lives on the corner. *ʕik-kurṣi lli waaɋif ɣalee il-ɣayyil* the chair that the child is standing on. ‖ *ʕiza kaan ṣaḥb-u ʕilli huwwa ṣaḥb-u mif ɣaawiz yisaɣd-u* if his own friend won't help him .... *ʕiza kaan il-mudarrisiin illi humma mudarrisiin ma-yiɋdaruu-ʃ yigawbu l-imtiḥaan* if the teachers themselves can't answer the exam .... **2** whoever, whichever, whatever. *ʕilli ʕana ɣawz-u ʕaruuḥ ʃayl-u* whatever I want. I take. *ʕis-sagaayir dool bituuɣ miin. - li-lli yiʃrab* 'Whose are those cigarettes?' 'They're for whoever wants to smoke.' *ʕilli lu ɋahr[i] ma-yinḍirib-ʃ[i] ɣala baṯn-u [prov]* ≈ he who has a backer comes to no harm. ‖ *ya-lli hina* ≈ anyone at home? -/eliptically/ *ʕilli xad ig-gurnaan bitaaɣ-i ygiib-u.* - *ʕilli.* 'Whoever took my paper, give it back.' 'Whoever (took it is not I).' **3** /w conj function/ seeing that, since. *ʕil-ḥaɋɋ[a] ɣalayya ʕilli ṯawiɣt-ak* it's my fault for obeying you. *ʕana ʕuʃkar illi ɋaddimt-ak lu* I should be thanked, since I introduced you to him. ‖ *kamaan illi* despite the fact that, as in *ɋaal bi-yiʃtim-ni kamaan illi xadt-u maɣaaya* just imagine, he's insulting me, even though I took him with me!
¶ *ʕilli ma* expression of incredulity at the non-appearance or non-occurrence of something. *ʕilli ma ʃaayif sawwaaɋ* incredible that there is no driver anywhere. *ʕilli ma ḥadd[i] ga zar-na* would you believe it - not a single person came to visit us!

ء ل ل ى -
ألالينا *ʕalaliina* <perh It *anilina*> /n/ furniture-staining fluid. - also *ʕanaliina.*

ء ل م
ألم *ʕalam* /n pl *ʕalaam*/ pain. ‖ *ʕusbuuɣ il-ʕalaaṁ [Chr]* Holy Week.
اليم *ʕaliim* /adj/ painful.
اتألّم *ʔitʕallim* /vi/ to experience pain. - ava *mitʕallim.*
ألّم *ʕaalim* /vt/ to hurt, cause pain to. *ʕil-garḥ[i] bi-yʕalim-ni ktiir* the wound causes me great pain. *yaama ʕalim-ha b-kalaam-u l-gaariḥ* how often he hurt her feelings with his sharp words. *bi-zyaada miʕalma liina b-taṣarrufaat-ik il-bayxa* you've hurt us enough with your stupid behaviour. - vn *miʕalma↓*; ava *miʕaalim.*

مؤلم *muʕlim* /adj */ painful.

ء ل م ا ظ
ألماظ *ʕalmaaz* <P *almâs*> /coll n/ diamond(s). *ʕir-raagil da ḥittit ʕalmaaz* that man is a gem of a fellow. ‖ *kalaam-u zayy il-ʕalmaaz* you can trust his word.
ألماظة *ʕalmaaza* /n pl *-aat*/ **1** /unit n/ a diamond. **2** glazier's glass cutter. – /no pl/ **3** /prop n/ Almaza, an area of Cairo to the north-east of Heliopolis, the site of Cairo's first airport.
ألماظيّة *ʕalmaziyya* /n/ jelly-like sweet dish consisting of starch, sugar and flavouring.

ء ل م ن
ألمانيا *ʕalmanya* /prop n/ Germany.
ألمانى *ʕalmaani, ʕalmaani* /pl *ʕalmaan, ʕalmaan*/ **1** /adj/ German. *ʕil-ḥaṣba l-ʕalmaani* German measles. – /n/ **2** a German. **3** /no pl/ the German language.

ء ل م ن ى
المونية *ʕalamunya* <It *alluminio*> /n/ aluminium, aluminum. *silk il-ʕalamunya* wire for scouring pots and pans.

ء ل ن see ³ ء ا ل : *ʕilaan*

ء ل ه
إله، إلاه *ʕilaah* /n pl *ʕaalíha*/ deity, god, specifically a pagan deity. *ʕaalíhit il-faraɋna* the gods of the Pharaohs. *ʕeeh it-tagabbur da - huwwa-nta ʕilaah* what's the meaning of all this bluster? do you think you're a god? ‖ *laa ʕilaaha ʕilla llaah* there is no god but God (the first part of the Muslim profession of faith, used as a response to, e.g., *waḥḥid allaah* or *waḥḥiduu* or *ʕamint[i] bi-llaah*, qq.v.). - *ʕilaah-i ynakkid ɣaleek* ≈ a plague on you!
¶ *ʕilaah-i* a formulaic exclamation of appeal to God. *ya ʕilaah-i* oh my God! *ʕilaah-i tirgaɋ saalim li-ɣyaal-ak [beggars]* please God may you return safe to your children!
إلاهى *ʕilaahi* /adj/ divine. *ʕis-sirr il-ʕilaahi* (1) the divine mystery. (2) breath of life, soul, as in *ʕis-sirr il-ʕilaahi ʈiliɣ* ≈ he gave up the ghost, he died.
الله *ʕallaah* /n; also *ʕallaahu, ʕallaahi, illaah* and *ʕillaahi* following the inflexion patterns of classical Arabic, with the variants *ʕalla* and *ʕilla*[2] in some contexts/ the one God, Allah. *ʕallaahu ʕakbar* God is most great. *ʕil-ḥamdu li-llaah* praise be to God. ‖ *ʕallaah* or *ʕallaah ɣala* an exclamation of delight, as in *ʕallaah ɣala g-*

gaww God, what lovely weather! *ʕallaah ʕin-noom laziiz* God, how nice it is to sleep! - *w-allaahi* (or *w-alla)* by God! a mild oath used (1) to lend emphasis to a request, statement or question, as in *min faḍl-ak w-allaahi* please! I beg of you! *w-allaahi* (or *w-alla) mif ɛaarif* I really don't know, *w-allaahi* (or *w-alla) ma-na raayiḥ* I most certainly will not go! *w-allaahi* (or *w-alla) ma-ḥadd'-ʃ yistaahil kida* certainly, no one deserves such treatment! *ʕay w-alla* (or *w-allaahi*) yes indeed! *ḥa-ysaafir amriika, - w-allaahi* 'He's going to America.' 'Really?' (2) to introduce an inferential conclusion, as in *w-allaahi* (or *w-alla) baqa da kull' waaḥid wi-zooq-u* well, then it's a matter of each to his own taste. - *li-llaah ya muḥsiniin [beggars]* (charity) for the sake of God, you charitable people! - *li-llaah fi-li-llaah* for no reason, for nothing, as in *ʃatam-ni li-llaah fi-li-llaah* he called me names for no reason. - *ɛal-alla* formula used (1) when refusing alms to a beggar ≈ God will provide! (2) to imply misgiving about an outcome, as in *bi-yquulu ḥa-yibnu-lna wiḥda ṣiḥḥiyya. - ɛal-alla* 'They say they'll build us a medical centre.' 'Let's hope so.', *ɛal-alla baqa yzaakir* let's just hope he studies, *ɛal-alla ma-tiddii-ʃ lil-quradaati qirf* just you wait and see what'll bappen if you don't give the monkey-man a piastre! - *ya-hl-alla ya-lli hina* is anyone at home? - for other formulaic phrases (e.g., *ʕaɛuuzu bi-llaah*), see under their other components. see also under *ʕalla.*

اللّه *ʕalla* (also *halla'*) /interj/ exclamation of surprise or dismay. *ʕalla gara ʕeeh* Heavens, what's happened!? *ʕalla ʕalla* ... what's all this! see also under *ʕallaah.*

اللاّوى *ʕallaawi* **1** /adj */ *[deris]* sanctimonious. **2** /adv/ without paying, for nothing.

اللّهمّ *ʕallahumma* O God! *ʕallahumma ʕigɛal-u xeer* ≈ pray God all turns out well! (said after laughing or dreaming or a bad premonition). *ʕallahumma ṭawwil-ik ya rooḥ* ≈ God give me patience! *ʕallahumma dim-ha niɛma* may God perpetuate His bounty (said, e.g., after eating). *ʕallahumma ḥfaẓ-na* God keep us! (said in the presence of danger or in face of meanness). *ʕallahumma la-ɛtiraaq* a formula used to disclaim any blasphemous intent in criticising God's work, as in *ʕir-raagil da mɛarraṣ ʕallahumma la-ɛtiraaq* the man's a swine, but God knows best!

¶ *ʕallahumma ʕilla* except for. *ʕaqul-lak ʕinnu ɛumr-u ma ɛiyi ʕallahumma ʕilla fwayyit ʕinfilwanza* I tell you he's never been ill, except for a slight attack of influenza. - *ʕallahumma ʕinn* as God is witness, as in *ʕallahumma ʕinni ṣaayim* (no,) by God, I am fasting (said when tempted to do something in Ramadan contrary to the observance of the fast, e.g., gossiping).

ء ل و ه

آلو *ʕalooh, ʕaluuh, ʕalu* <Fr *allô*> /interj/ hello! (in answering the telephone).

ء ل ى

ألية *ʕalya, ʕilya* /n pl *-aat, ʕaly, ʕily/ [anat]* buttock. *ḥuqna fil-ʕalya* an injection in the buttock. || *ʕabu ʕalya [abus slang]* (one with a) fat arse.

ء ل ى ا ذ

الإلياذة *ʕil-ʕilyaaza* (also *malḥamit il-ʕilyaaza*) /n/ the Iliad.

ء م ب ا

أنبا *ʕamba* <Copt> /n/ title of Coptic patriarchs, bishops and metropolitans.

ء م ب ا ب

إمبابة *ʕimbaaba* /prop n/ Embaba, a northern suburb of Guiza on the bank of the Nile.

إمبابى *ʕimbaabi* /pl *-yya/* **1** /adj/ of or pertaining to Embaba. **2** /n/ one from Embaba.

إمباباوى *ʕimbabaawi* /pl *-yya/* = *ʕimbaabi.*

ء م ب ا ش

أونباشى *ʕumbaaʃa, ʕumbaaʃi* <T *onbaşı*> /n pl *-yya/ [mil, obsol]* corporal (later *ɛariif). wakiil ʕumbaaʃa* lance-corporal.

ء م ب ا - ١

إمبارح *ʕimbariḥ* **1** /adv/ yesterday. *ma-raḥit-ʃ imbaariḥ* she didn't go yesterday. **2** /n/ yesterday. *ʕatraak ʕimbaariḥ* the Turks of yesterday. || *ʕibn imbaariḥ* ingenuous man, naive man. - *ʕawlaad ʕimbaariḥ* the young. - *ʕawwil ʕimbaariḥ* the day before yesterday. - *ʕawwil ʕawwil ʕimbaariḥ* three days ago.

ء م ب ر - ١

أمبراطور *ʕimbraṭoor, ʕambraṭoor* <perh It *imperatore*> /n pl *ʕabaṭra↑*/ emperor.

أمبراطورة *ʕimbraṭoora, ʕambraṭoora* /n pl *-aat/* empress.

أمبراطورى *ʕimbraṭoori, ʕambraṭoori* /adj */ imperial.

أمبراطوريّة *ʕimbraṭoriyya, ʕambraṭoriyya* /n/ empire.

² (ء م ب ر -)

إمبريال *ʕimbiryaal* <Fr *impérial*>: *goox imbiryaal* best quality baize.

أمبراس ʃambaraas <Fr *embrasse*> /n pl *-aat*/ decorative tasselled cord used for looping back a curtain.

ء م ب ل
أمبليه ʃambaleeh <Fr *emballer*> /n/ *[auto]* revving. *ʃiddii-ha ʃambaleeh* rev her up!

ء م ب و ل
أمبولة ʃambuula <Fr> /n pl *-aat*/ ampule.

ء م ب و ن
أمبون ʃambuun <Gr *ambôn*> /n/ *[Chr]* pulpit (of wood or marble).

ء م ب و ه
أمبو ʃumbuuh <Copt> *[children]* **1** /n/ any drink, but especially water. **2** /interj/ offer of, or request for, the same.

(ء م ب ي ر)
أمبير ʃambeer <Fr *ampère*> /n pl *-aat*/ **1** *[elec]* **1a** ampere, **1b** amperage. **1c** ammeter. **2** gauge. *ʃambeer il-banziin* fuel gauge. *ʃambeer is-surʕa* speedometer.
أمبير ʃambiir <Fr *empire*> /adj invar/ Empire-style (of dress etc.).

ء م ت ا
إمتى ʃimta **1** /interrog adv/ when? *ʃaagi ʃimta* when shall I come? *ḥaṣal ʃimta* when did it happen? **2** /pron/ when. *ʠul-lu yiigi ʃimta* tell him when to come.

ء م ت س -
أموتسير ʃamutseer <Fr *amortisseur*> /n pl *-aat*/ *[auto]* shock-absorber.

ء م د
أمد ʃamd /n/: *daftar il-ʃamd[i] wir-rafd [mil]* register of incoming and departing soldiers.

ء م ر [1]
أمر ʃamar *(u)* **1** /vt/ to order, give orders to. *rabb-i-na ʃamar muusa bii* Our Lord ordered Moses to do it. **2** /vi/ to order, command. *ʃiḥna fil-xidma - ʃuʃmur* (or *tuʃmur) bass* we're at your service - just say the word. *lamma rabb-i-na yuʃmur* when God wills. - vn *ʃamr*; ava *ʃaamir*; pva *maʃmuur*.
أمر ʃamr[1] /n pl *ʃawaamir*/ command, order. *ʃamr-ak* just as you wish! *taḥt[i] ʃamr-ak* (I'm) at your disposal. *bi-ʃamr illaah* God willing. *ʃawaamir ʃidariyya* administrative rulings. *ʃamr[i] dafʕ* and *ʃamr[i] ṣarf* payment order. || *ḥaakim bi-ʃamr-u* absolute ruler. - *ʃiza garaa-li ʃamr allaah* ≈ if I should die.
مأمور maʃmuur **1** /pva/ || *ʃana ʕabd il-maʃmuur* I just carry out orders. **2** /n pl *maʃamiir*/ **2a** police officer in charge of an *ʠism* or a *markaz*. **2b** official in charge of a district branch of a governmental body. *maʃmuur ḍaraayib* local tax inspector. **3** manager (of an estate), bailiff.
مأمورية maʃmuriyya /n pl *-aat*/ **1a** district branch of a governmental body. *maʃmuriyyit ḍaraayib gardin siti* the Garden City Office of Inland Revenue. **1b** position of being in charge of such a branch. **2a** office or position of an estate manager. **2b** area under the supervision of an estate manager. **3** chore, errand, assignment.
إمارة ʃimaara /n/ **1** overbearing behaviour, bossiness. **2** /pl *-aat*/ emirate.
أمير ʃamiir /pl *ʃumara, ʃamaara*/ **1** /n/ prince. *ʃamiir iʃ-ʃuhada* Prince of the Martyrs (St. George). *law ʃana ʃamiir wi-nta ʃamiir miin yisuuʠ il-ḥimiir [prov]* if I'm a prince and you're a prince who'll be left to drive the donkeys? || *ʃamiir biḥaar* highest rank in the Egyptian Navy. - *ʃamiir baḥr* second-highest rank in the Egyptian Navy. **2** /adj/ kind-hearted, pleasant, obliging. *da gadaʕ ʃamiir* he's a good-hearted chap.
أميرة ʃamiira /n pl *-aat*/ princess.
أميرى ʃamiiri /adj/ *[obsol]* governmental. *ʃil-madaaris il-ʃamiriyya* the state schools. - also *miiri*.
أمير ألاى ʃamiiralaay (also *miralaay*) /n pl *-aat*/ *[obsol]* ranks in the Egyptian Army and Navy approximately corresponding to lieutenant-general and captain respectively.
اتأمّر ʔitʃammar /vi/ to behave bossily. *ʃil-muwaẓẓafiin bi-yitʃammaru ʕag-gumhuur* the officials push the public around. - ava *mitʃammar*.
مؤتمر muʔtamar /n pl *-aat*/ conference.
استمارة ʔistimaara /n pl *-aat*/ official form. || *ʔistimaarit ʠumaaʃ* a form on presentation of which a government employee can buy goods (originally cloth) from a government store against his salary.

ء م ر [2]
أمر ʃamr[2] /n pl *ʃumuur*/ affair, matter, case (especially one's personal case or the set of circumstances in which one finds oneself). *ḥaaga maʕruuf ʃamr-a-ha* a matter of common knowledge. *ma-lii-ʃ fi-ʃumuur mash ig-goox di* I have nothing to do with this toadying business. *ʃana miḥtaar fi-ʃamr-u* I can't make him out.

‖ *ʃamr-i* (or *ʃamr-i-na) li-llaah* ≈ I give up, let matters run their course (indicating resignation). - *waliyy' ʃamr [leg]* guardian. - *ʃamaam il-ʃamr il-waaqiɛ↑* faced with a *fait accompli*. - *maɤluub ɛala ʃamr-u* having his hand forced, helpless. - *ʃamr-ak ɤariib* you are a curious man!

أمارة *ʃamaara* /n pl *-aat*/ **1** evidence, indication. *ɛala wiff-u ʃamaraat it-taqwa* his face bears the marks of piety. **2** (verbal) sign, token (as evidence of good faith). *ʃiddii-ni ʃamaara ɛaʃaan if-faɤɤaala tirda tdaxxal-ni faqqit-ak* tell me what to say to the maid so that she will (know I'm not an impostor and) let me into your flat. *bi-ʃamaarit ma* (or *wi-bil-ʃamaara) kuntu ɛand' ʃaxuu-ya mbaariḥ* as evidence (that I have really been to see him, I know from my brother that) you were with him yesterday.

مؤامرة *muʃamra* /n pl *-aat*/ plot, conspiracy.

اتآمر *ʃitʃaamar* /vi/ to plot, conspire. - ava *mitʃaamir*.

ء م ر ك

أمريكا *ʃamriika, ʃamirika* /prop n/ America.

أمريكى *ʃamriiki* /adj/ American.

أمريكانى *ʃamrikaani* /pl *ʃamrikaan*/ **1** /adj/ American. ‖ *gild' ʃamrikaani* thick leather of good quality. - *baar ʃamrikaani* a built-in bar in a house. - *ɋamiiṣ ʃamrikaani* a casual shirt. **2** /n/ an American.

اتأمرك *ʃitʃamrak, ʃitʃamrik* /vi/ *[deris]* to adopt what are thought to be American manners. - vn *ʃamraka*; ava *mitʃamrik*.

استأمرك *ʃistiʃamrik* /vi/ *[deris]* to ape the Americans. - ava *mistiʃamrik*.

ء م ر ل – see ء م ر ١: *ʃamiralaay*

ء م ش ى ر

أمشير *ʃamʃiir* <Copt> /prop n/ Amshir, the sixth month of the Coptic year (early February to early March). ‖ *ʃil-ʃism' l-ɫuuba wil-fiɛl' l-ʃamʃiir* ≈ one thing said and another thing done. - *ʃamʃiir daxal bi-zaɛabiib-u* Amshir has arrived bringing its storms, referring (1) to the coming of stormy weather at the end of winter. (2) to the arrival of a temperamental or moody person.

ء م ع see م ع ى: *ʃamɛa, ʃamɛaaʃ*

ء م ل

يأمل *yiʃmal↑* /vt, imperf only/ to hope. *ʃana b-aʃmal ʃinnak tizur-ni* I hope you'll visit me. *maraq mif maʃmuul if-fifa minnu* a disease from which there is no hope of recovery. - vn *ʃamal*; ava *ʃaamil*; pva *maʃmuul*.

أمل *ʃamal* /n pl *ʃamaal*/ hope, aspiration. *ɛala ʃamal il-maksab* in the hope of profit. *ʃaṣḥaab-ak xayyibu ʃamal-ak* your friends brought about your failure. ‖ *xeebit ʃamal* a big failure, total good-for-nothing. - *xeebit il-ʃamal rakba gamal [prov]* a failure mounted on a camel (mockingly of one who promises what is beyond his capacity). - *ʃamal ʃibliis fig-ganna [prov]* (Satan's hope of Paradise) ≈ a total impossibility.

أملة *ʃamala* /n/ **1** source of desire and wonder. *tiqul-f' beet-ak ʃamala* what's so marvellous about your house? *ʃil-laḥma ɛanduhum ʃamala* (meat for them is an object of curiosity) ≈ they don't see meat from one year's end to the next. *ʃil-qamar ir-ruusi kaan ʃamalit in-naas kull-a-ha* the Russian satellite was the big thing with everyone. ‖ *ʃamma di ʃamala w-allaahi* what an incredible way to behave! **2** aspiration, goal. *ɛuqbaal ʃamalt-ak [women in trad soc]* may you gain what you hope for too! (used on happy occasions and at celebrations).

اتأمل *ʃitʃammil* /vi/ **1a** to wonder in disbelief. *qaɛadt' ʃatʃammil fi-ʃaḥwaal id-dunya* I sat there wondering at the ways of the world. *ʃitʃammilu ya naas* ≈ would you ever believe it? can you credit it? **1b** to make a close examination. *fataḥ is-saaɛa w-qaɛad yitʃammil fiiha* he opened the watch and scrutinized the works. **2↑** to ponder, reflect, meditate. *baɛd it-taʃammul fil-mawquuɛ* after thinking the matter over. -vn *taʃammul↑*; ava *mitʃammil, mutaʃammil↑*.

تأمل *taʃammul↑* /n pl *-aat*/ topic of meditation, devotional theme.

ء م م ١

أم *ʃumm* /fem n/ **1** /pl *ʃummahaat, ʃummahaat*/ **1a** mother; - used with the name of a woman's eldest son, or, if she has no sons, her eldest daughter, or, if she has no children, her father, as a respectful and slightly affectionate substitute for her own name. *ya ʃumm-i* a formal and respectful mode of address to an older woman. *baɛd umm-i w-ʃuxt-i ʃil-kull' giraan-i [prov]* after my mother and sister, all (others) are (mere) neighbours. *ʃilli ɛandu ʃumm-u ma-yinḥimil-f' hamm-u [prov]* there's no need to worry about someone who has his mother (to support him). ‖ *ʃibn umm-u* mother's boy, sissy. - *ʃumm il-ɛagaayiz* epithet of Sayyida Zaynab. - *ʃumm il-maṣriyyiin* (1) epithet of the wife of Sa'd Zaghloul. (2) hospital named after her in Guiza, and the surrounding area. - *ʃumm il-muʃminiin* name

accorded to each of the wives of the Prophet Muhammad. - *ʃumm id-dinya* epithet of Egypt. - *ʃumm il-qura* Mecca. - *ʃumm" ɛali* dessert of filo pastry, raisins and butter, baked in hot milk. - *ʃumm ir-raas* the top of the head. **1b** *[print]* matrix. **2** /w foll pron suff, no pl/ stem, source, origin (cf *ʃabb* 4). *ʃil-fuul bi-yinfaf ɛala ʃummu* the beans dry on the plant. ‖ *ʃumm il-ɋeeḥ* core of a boil or abscess. **3** /w foll n, masc and fem pl *ʃummaat, ʃummaat*/ **3a** the one with, the one having. *ʃil-ɋahwa t-turki ʃummi wiff* Turkish coffee with a head. *kubbayaat in-nibiit ʃummi rigl* the stemmed wineglasses. *ʃir-riggaala ʃummaat il-ɋumṣaan il-biiɋ* the men with the white shirts. ‖ *ʃumm il-xeer* (or *ʃumm is-saɛd* or *ʃumm il-hana*) epithet applied to a girl or a woman regarded as the bearer of good fortune. **3b** the one costing. *ʃil-ɛarabiyya ʃummi xamast alaaf gineeh* the five-thousand pound car. - for other phrases beginning with *ʃumm* (e.g., *ʃummi ɋweeɋ*) look up the second component of the phrase.

أمّا *ʃamma* /n; always used in vocative/ *[trad soc]* mother. *haati l-ɛeef y-amma* bring the bread, ma! ‖*y-amma, y-amma-y [children]* exclamation of fear.

أمومة *ʃumuuma* /n/ maternity, motherhood.

2 ء م م

أمّة *ʃumma* /n pl *ʃumam*/ **1** nation. *maglis il-ʃumma* the National Assembly. *ʃil-ʃumam il-muttaḥida* the United Nations. ‖*ya ʃummit in-nabi* ≈ what bedlam! **2** *ʃumam* /pl n/ crowds. *naas ʃumam* crowds of people.

أمّم *ʃammim* /vt/ to nationalize. - vn *taʃmiim*; ava/pva *miʃammim*.

اتأمّم *ʃitʃammim* /vi/ to be nationalized. - iva *mitʃammim*.

3 ء م م

أمّي *ʃummi* /adj */ illiterate.

أمّيّة *ʃummiyya* /n/ illiteracy. *maḥw ummiyya* eradication of illiteracy.

4 ء م م

أمّ *ʃamm (i)* /vt/ *[Isl]* to lead (the prayer), lead (s.o.) in the prayer. - vn *ʃamamaan*; ava *ʃaamim*; pva *maʃmuum*.

إمام *ʃimaam* /n pl *ʃaʃimma*/ *[Isl]* **1** prayer leader, imam. ‖ *ʃimaam masgid* chief religious leader in a mosque. **2** title of certain religious leaders. *ʃimaam il-yaman [obsol]* the Imam of the Yemen. ‖ *ʃil-ʃaʃimma l-ʃarbaɛa* the four eponymous founders of the schools of Islamic law. - *ʃil-ʃimaam* (1) = *ʃil-ʃimaam iʃ-ʃafɛi* (founder of the school of law dominant in Egypt). (2) the tomb of Imam Shafi'i in south-east Cairo and the district around it. - *ʃil-ʃimaam il-ʃakbar* the Sheikh of el-Azhar.

أمام *ʃamaam*↑ **1** /prep/ before, in front of. **2** /n/ front. *xaṭwa lil-ʃamaam* one step forward!

أمامي *ʃamaami*↑ /adj */ **1** fore, front. *ʃil-ʃasnaan il-ʃamamiyya* the front teeth. *ʃir-rigl il-ʃamamiyya* the foreleg. **2** forward. *laffa ʃamamiyya [gym]* forward roll.

5 ء م م

أمّ *ʃamm* <Copt> *[children]* **1** /n/ food. **2** /interj/ eat! - also *mam, hamm*.

ء م م ا

أمّا *ʃamma* **1** /conj/ **1a** when. *naadi ɛalayya ʃamma tuxrug* call me when you go out. **1b** if. *ʃamma tistanna baɛd is-saaɛa tnaafar miʃ ḥa-tlaaɋi taks* if you stay till after twelve, you won't find a taxi. **1c** until. *ʃuɋɛud ʃamma yirgaɛ* stay until he comes back. - /often used in elliptic statements/ *ʃamma ʃafuuf in-nobaa-di ḥa-titḥaggigu b-ʃeeh* (I'm just waiting) to see what excuses you'll make this time. **2** /conj/ as for. *ʃamma l-mazziika l-ɤarbiyya fa-laha lli yifhamuu-ha* as for western music, there are those who appreciate it. **3** interjection emphasizing extent or degree. *ʃamma di ḥkaaya* what an extraordinary business! that really is something! *ʃamma da raagil naṣṣaab* what a crook the man is! *ʃamma mbaariḥ sihirna ḥittit sahra* what a great evening we had yesterday!

إمّا *ʃimma* (also *ya ʃimma* and *la-ʃimma, ʃimman* and *ya ʃimman* and *la-ʃimman, ya ʃimmatan* and *la-ʃimmatan*) /correl conj/ *ʃimma* (or any variant) ... *ʃaw* (or *ʃimma* or any variant) either ... or. *laazim yikuun ʃimma xadam fig-geef ʃaw itɛafa minnu* he must have either served in the army or been exempted from it.

ء م م ا ل

أمّال *ʃummaal* particle used **1** to introduce a question, often rhetorical and sarcastic, that asks for further information on the implication of a preceding statement or act ≈ in that case ..., if that is so ..., *ʃalla ʃinta lli b-tiftaḥ il-baab - ʃummaal feen ʃumm" ɛali* my! you open the door yourself! but where's Umm Ali? *ʃummaal ma-ḥaddi-ʃ bi-yzur-ni leeh* then why doesn't anyone visit me? *ʃummaal zambi miin* so whose fault is it? **2** to introduce an emphatically affirmative answer to a question, or the confirmation of a statement ≈ but of course! most certainly! *dafaɛt illi ɛaleek*. - *ʃummaal* 'Have you paid what you owe?' 'Sure I have!' *laazim*

tiruuḥ li-waḥd-ak. - *ʃummaal yaʕni miin ḥa-yruuh maʕaaya* 'You'll have to go on your own.' 'Of course. Who is there to go with me?' **3** to indicate impatience or exasperation. *ʃistanna ʕalayya ʃummaal* give me a little time, will you! *ʃismaʕ bass' ʃummaal* just listen, will you!

ء م م ت ن see ء م م ا: *ʃimmatan*

ء م م ن see ء م م ا: *ʃimman*

ء م ن

إمن *ʃimin (a)* /vi/ **1** to feel secure. *hiyya ʕayza tlaaqi r-raagil illi tiʃman ʃinn[a] ḥayat-ha maʕaa tkuun saʕiida* she wants to find a man with whom she may feel sure that her life will be happy. *ma-b-aʃman-ʃ' ʕalee l-waḥd-u* I don't feel easy about him on his own. **2** to be trusting. *ma-b-aʃman-luu-ʃ* I don't trust him. - vn *ʃamn*; ava *ʃaamin*.

أمن *ʃamn* /n/ safety, security. *ʃil-ʃamn il-qawmi* national security. *ʃil-ʃamn iṣ-ṣinaaʕi* industrial safety. *(quwwaat) ʃil-ʃamn il-markazi* the riot police, the home-guard.

أمان *ʃamaan* /n/ safety, security. *wiṣil bi-ʃamaan* he arrived safely. *ḥizaam ʃamaan* safety-belt. *ṣanʕa fil-yadd' ʃamaan min il-faqr* possession of a craft is a safeguard against poverty. - /adjectivally/ *baṣṣeet fimaal wi-ymiin laqeet is-sikka ʃamaan* I looked left and right and found it safe to cross. ‖ *ʃir-riggaala ma-lhum-ʃ' ʃamaan* never trust a man! (said by a woman). - *fatrit il-ʃamaan* the safe period (during which the likelihood of conception is minimal). - *fi-ʃamaan illaah* (1) goodbye! (2) minding one's own business, doing no harm to anyone, as in *ʃana kunt' saayiq fi-ʃamaan illaah laqet-ha nizlit quddaam il-ʕarabiyya* I was driving along just nicely, when suddenly she stepped out in front of the car.

أمانة *ʃamaana* /n/ **1** honesty, trustworthiness. — /pl *-aat*/ **2a** something held in safe-keeping, deposit. *sibt ik-kitaab ʃamaana ʕandu* I left the book with him for safe-keeping. ‖ *maktab il-ʃamanaat* the left-luggage office, baggage deposit. **2b** some object kept hidden, or the existence of which is known only to a few. *ruḥt' mṭallaʕ il-ʃamaana min geeb-i* I pulled the you-know-what out of my pocket. **3** secretariat. *ʃil-ʃamaana l-ʕaamma* secretariat general. **4** *[euphem]* faeces. *ḥaṭṭ-i-lu l-ʃamaana ʕal-baab* he left his visiting-card in front of the door. — /interj/ **5** I implore! *ʃamaana (ʕaleek) truuḥ tinadii* I beg you to go and call him.

أمين *ʃamiin'* **1** /adj pl *ʃumana*/ honest, trustworthy. *ʃil-muḥaami laazim yikuun ʃamiin maʕa l-ʕumala* a lawyer must be honest with his clients. **2** /n pl *ʃumanaaʃ*/ official in a confidential or responsible position vis-à-vis a body or institution. ‖ *ʃamiin lagna* committee secretary. - *ʃamiin maxzan* warehouse supervisor. - *ʃamiin sanduuq* treasurer. - *ʃamiin maktaba* librarian. - *ʃamiin furṭa* municipal green-uniformed policeman (necessarily a holder of the high school certificate).

آمين *ʃaamiin, ʃamiin*[2] /interj/ amen. *ʃadʕi ʕala walad-i w-ʃakrah min yiquul ʃamiin [prov]* I curse my son, and hate those who say 'Amen'.

أمّن *ʃammin* /vt/ **1** to trust. *m-aʃammin-uu-ʃ ʕala bint-i* I wouldn't trust him with my daughter. *min ʃammin-ak la-txuun-u wa-law kunt' xaayin [prov]* do not betray the trust of one who trusts you even if you are really not trustworthy ≈ live up to people's expectations, even if they are ill-founded. **2** to render (a firearm or the like) safe. *ʃil-musaddas miʃammin* the revolver has the safety-catch on. — /vi/ **3** to take out insurance. *ʃit-taʃmiin ḍidd il-maraḍ* insurance against illness. *ʃammin ʕala ḥayaat-u b-ʃalf' gneeh* he insured his life for a thousand pounds. **4** to say 'Amen' (e.g., after a prayer). ‖ *ʃammint[a] ʕala kalaam-u* I approved of what he said. - vn *taʃmiin*; ava/pva *miʃammin*; pva *muʃamman*↑.

تأمين *taʃmiin* /n pl *-aat*/ insurance, surety. *taʃmiin ʃaamil* comprehensive insurance. *taʃminaat igtimaʕiyya* social insurance, social security. *taʃmiin ibtidaaʃi* initial surety (paid by one submitting a tender or the like). *ḥikaayit ig-gawaaz kull-a-ha taʃminaat - ʃif-fabka taʃmiin ʃil-mahr' taʃmiin ʃil-muʃaxxar taʃmiin* marriage is entirely a matter of insurances; the engagement gift of jewelry is an insurance; the bride-money is an insurance; the money set aside for a wife in case of divorce is an insurance.

مؤمّن *muʃamman: muʃamman ʕalee* insured person or object.

اتأمّن *ʃitʃammin* /vi/ passive of *ʃammin*. - ava/iva *mitʃammin*.

آمن *ʃaamin* /vi/ **1** to have faith, believe. *ʃif-faʕb' ʃaamin bii* the people believed in him. *ya mʃamna lir-rigaal ya mʃamna lil-mayya fil-ʁurbaal [prov]* to have faith in men is to have faith in a sieve holding water. ‖ *ʃamint' bi-llaah* an exclamation of wonder at some manifestation of God's wisdom. - *tiʃamnu bi-llaah* ≈ would you ever believe such a thing? **2** to have confidence, have trust. *ya weel illi yʃaamin luku* woe to him who trusts in you! *ma-bi-yʃamin-ʃ' ʕal-fuluus fil-*

bank he does not trust the bank with his money. - vn *miʃamna*; ava *miʃaamin*.

اتآمن *ʃitʃaamin* /vi/ to be trusted. *da-nta titʃaamin ɛad-dahab* you are to be trusted even with gold. - iva *mitʃaamin*.

إيمان *ʃimaan, ʃiimaan* /n/ faith, belief. *ɛala qadd^{i} ʃimaan if-faɛb^{i} b-yibqa ʃimaan ig-geef* the army's faith will be in proportion to that of the people.

مؤمن *muʃmin* /n */ believer, member of the faithful. *qalb il-muʃmin daliil-u* (the heart of the believer is his guide) the (true) believer can trust his heart. *ʃil-muʃmin dayman muṣaab [prov]* ≈ the righteous are (the worst) afflicted (as a test of their faith, an expression used when offering comfort in disaster).

ائتمن *ʃiʃtaman* /vt/ to trust. *ma-b-tiʃtimin-nii-ʃ* don't you trust me? *ʃaʃtimn-u ɛala ʃayy^{i} ḥaaga* I'd trust him with anything. - vn *ʃiʃtimaan*; ava *miʃtimin*; pva *muʃtaman*.

ائتماني *ʃiʃtimaani* /adj/ pertaining to credit. *tashilaat iʃtimaniyya* credit facilities.

استأمن *ʃistaʃmin* /vt/ **1** to trust. **2** to select for trustworthiness. - ava *mistaʃmin*.

استأمّن *ʃistiʃammin↓* /vi/ to place trust. *baqa qaaɛid mistiʃammin-lu yquum yisraq-ni* here I am, sitting off my guard trusting him and he robs me. - ava *mistiʃammin*.

استآمن *ʃistiʃaamin↓* /vi/ to feel safe, feel secure. *siib-u lamma yistiʃaamin wi-ynaam wi-baɛdeen ʃimsik-u* leave him until he feels safe and goes to sleep then catch him. - ava *mistiʃaamin*.

ء م ن ب -

أمنيبوس *ʃumnibuus* or *ʃumnubuus* <Fr *omnibus*> /n pl *-aat/ [obsol]* bus.

ء م ن ث

أمينت *ʃamint* <Fr *amiante*> /n/ asbestos. - also *ʃamyant*.

ء م ن ى

أمونيا *ʃamunya* <Engl> /n/ ammonia.

ء م ه ا ت

أمهات *ʃamhaat: balaḥ ʃamhaat* a small sweet yellow variety of date.

ء م و ى ل

أمويل *ʃamwiil* /coll n/ *[obsol]* bamboo canes (for use in the manufacture of furniture).

ء م ى ن ت

أمينت *ʃamyant* <Fr *amiante*> asbestos. - also *ʃamint*.

ء ن

إن *ʃin* /conj/ if. *ʃin qult^{i} ʃaah nibqa mwafqiin* if you say 'yes', then we're agreed. *ʃin ʃaaʃ allaah* if God will. ¶ *ʃin ... walla ...* /correl conj/ whether ... or .... *ʃin kaan kuwayyis walla wiḥiʃ* whether it be good or bad.

ء ن ا

أنا *ʃana* /pers pron/ I. *ʃana gaɛaan* I'm hungry. *da-na ɤalbaan* but I'm (just) a poor man. ‖ *qaal ʃana w-ʃana* to brag, boast, as in *kull^{i} ma yiftaḥ buqq-u yquul ʃana w-ʃana* every time he opens his mouth it's to boast about himself. - *ʃana w-huwwa wiz-zaman ṭawiil* ≈ I'll get even with him in the end. - *ʃana w-ʃaxuu-ya ɛala bn^{i} ɛamm-i w-ʃana wi-bn^{i} ɛamm-i ɛal-ɤariib [prov]* my brother and I stand together (in a dispute) against my cousin, but my cousin and I stand together against anyone outside the family.

¶ *ya-ana* (o- ··-*aani*) dear me! oh my! (used by one who is ill, tired o. exasperated).

أناني *ʃanaani* **1** /adj */ egoistic, selfish. **2** /n */ egoist.

أنانيّة *ʃananiyya* /n/ egoism, selfishness.

ء ن ب

أنّب *ʃannib* /vt/ to scold. *ʃabuu ʃannib-u ɛa-lli ɛamal-u* his father scolded him for what he had done. - vn *taʃniib*; ava *miʃannib*.

تأنيب *taʃniib* /vn/ ‖ *taʃniib iq-qamiir* pangs of conscience.

اتأنّب *ʃitʃannib* /vi/ to be scolded. - iva *mitʃannib*.

ء ن ب ا see ء م ب ا

ء ن ب ا ش see ء م ب ا ش

ء ن ب و ب

أنبوبة *ʃambuuba, ʃumbuuba* /n pl *ʃanabiib, ʃambubaat*/ **1** cylinder. *ʃumbuubit butagaaz* a cylinder of butane gas. **2** tube. *ʃambuubit maɛguun sinaan* a tube of tooth-paste. *ʃambuubit ixtibaar* test tube. ‖ *ʃambuubit qalam* a biro refill, ball-point pen refill. **3** inflatable ball. ‖ *ʃambuubit il-hawa* squeeze-bulb (on a scent-spray, an atomizer etc.).

ء ن ت [1]

نتاية *nitaaya* /pl *nity, nuty, nitayaat*/ **1** /adj/ **1a** female (animal or plant). *naxla ntaaya* female palm tree. **1b** voluptuous (of a woman). **2** /n/ **2a** person, animal or

plant of the female sex. *kalbit-na wildit talat dukúra wi-ntayteen* our dog gave birth to three male and two female puppies. **2b** female (plug, joint, mechanical part etc.). *dakar wi-ntaaya* (1) tenon and mortise. (2) hook and eye fastener.
أنوثة *ʕunuusa* /n/ femininity.

ء ن ت [2]
إنت *ʕinta* /pers pron sing masc/ you. *ʕinta kaddaab* you're a liar! *di btaɛt-ak ʕinta* is this yours? *da-nta ʃakl-ak baayin ɛalee z-zaɛal* it's obvious from your appearance that you are upset. ‖ *ʕinta w-huwwa* both of you! (usually in contexts of abuse) as in *ya wlaad ik-kalb ʕinta w-huwwa* you sons of bitches both of you! *yalla ʕinta w-huwwa* get the hell out, both of you! - *ya waad ʕinta [abus]* hey you boy! - *ʕinta w-ʕinta [abus]* you this and you that, as in *ma-luu-ʃ kalaam ʕilla nta w-ʕinta lamma zhiqt* he has been doing nothing but criticize me and I've reached the end of my tether.
إنتي، إنتِ *ʕinti* /pers pron sing fem/ you. *ʕinti ḥabibt-i* you're my darling.
إنتو *ʕintu* /pers pron pl/ you. *ʕintu ʕaḥsan naas* you're the best of people.
إنتم *ʕintum* = *ʕintu*.

(ء ن ت ر –)
أنتيره *ʕantireeh* <Fr *entrée*> /n pl *-aat*/ **1** informal sitting room (in contrast with *ṣaloon*). **2** suite of furniture for such a room.
أنترتيب *ʕantartayb* <Engl> /n/ intertype machine.
أنتوراج *ʕanturaaj* <Fr *entourage*> /n/ ring circled with gems.
إنترفيو *ʕintarfiyuuh* <Engl> /n pl *-aat*/ interview. *ɛamaluu-lu ʕintarfiyuuh* they interviewed him.
أنتركوت *ʕantirikoot* or *ʕantarkoot* or *ʕintarkoot* <Fr> /n/ beef from the ribs, entrecôte.

ء ن ت ك
أنتيكة *ʕantiika* <It *antico*> /n pl *-aat*/ **1** antique. – /adj invar/ **2** ancient, antique. **3** odd, droll, grotesque. *wiff-ak ʕantiika* your face is absurd. *ʃakl-u ʕantiika* he's a droll-looking type.
أنتيكخانة *ʕantikxaana* /n/ museum; obsolete except in *ʕil-ʕantikxaana* the Egyptian Museum.
اتأنتك *ʔitʕantik* /vi/ to dress in a quaint and elaborate fashion. - vn *ʕantaka*; ava *mitʕantik*.

ء ن ت م see [2] ء ن ت: *ʕintum*

ء ن ت ن ن
أنتنة *ʕantinna* <Engl> /n pl *-aat*/ antenna.

ء ن ت و ت
أنتوت *ʕantuut* <prob Copt> /n pl *ʕanatiit*/ peg on the beam of a plough, or of a *saqya*, for the attachment of harness (see Pl.D, 13). - also *bantuut, lantuut*.

ء ن ث see [1] ء ن ت

ء ن ج ج
أنجيه *ʕangajeeh* <Fr *engagé*> /adv/ arm in arm. *kaanu maʃyiin ʕangajeeh* they were walking arm in arm.
أنجج *ʕangij* /vt/ to link one's arm with (s.o.). - vn *ʕangaja*; ava *miʕangij*.
اتأنجج *ʔitʕangij* /vi/ to link arms. - ava *mitʕangij*.

ء ن ج ر
أنجر *ʕangar* /n pl *ʕanaagir*/ large shallow copper serving-vessel.

ء ن ج ل –
إنجلترا *ʕingiltira, ʕingiltira* <It *Inghilterra*> /prop n/ England, (loosely also) Britain.
إنجليزى *ʕingiliizi* /adj pl *ʕingiliiz*/ **1** English, (loosely) British. ‖ *ʕaḥmar ʕingiliizi* pillar-box red. - *muftaaḥ ʕingiliizi* monkey wrench. - *kurraas ʕingiliizi* exercise book for handwriting practice. - *firaax ʕingiliizi* large variety of chicken. - *(ʃarbit) malḥ ingiliizi* Epsom salts. - *buruud ʕingiliizi* British reserve, the stiff upper lip. - *ṣamɣ ingiliizi [chem]* dextrin, British gum. – /n/ **2** an Englishman, (loosely) a Briton. ‖ *xallii-na ngiliiz* let's go Dutch! **3** /no pl/ the English language.

ء ن ج ى ل
إنجيل *ʕingiil* /n/ **1** /pl *ʕanagiil*/ gospel. **2** *ʕil-ʕingiil* /no pl/ the New Testament.
إنجيلى *ʕingiili [Chr]* **1** /n */ **1a** Evangelist, writer of one of the four gospels. **1b** reader in church services. **2** /adj */ evangelical. *ʕil-ʕaqbaaṭ il-ʕingiliyyiin* members of the Coptic Evangelical Church.
منجليّة *mangaliyya* /n pl *-aat*/ *[Chr]* church lectern.

ء ن د ل س
أندلس *ʕandalus* /prop n/ Andalusia.
أندلسى *ʕandalusi, ʕandaluusi* /adj */ Andalusian.

ء ن ر ب see ء ر ن ب

ء ن ز ى م
أنزيم *ʕanziim* <Fr> /n pl *-aat*/ enzyme.

ء ن س [1] see also و ن س
أنس *ʕuns* **1** /n/ friendly atmosphere, conviviality.

qaɛdit ʃuns a convivial gathering. **2** /adj invar/ congenial, convivial. *sitt*^{i} *ʃuns* a convivial woman. *maglis ʃuns* a convivial get-together. *lelit-na ḥa-tkuun ʃuns* our night will be fun.

إنس *ʃins* /coll n/ member(s) of the human race. *ʃinta ʃins*^{i} *walla ginn* are you a person or a spirit (said, e.g., when coming upon someone in the dark) ≈ what have we here? *ʃil-ʃins*^{i} *wil-ginn*^{i} *wil-ḥayawaan win-nabaat* mankind, spirits, animals and plants.

إنسي *ʃinsi* **1** /adj */ attributed to mankind (as distinguished from the world of spirits). **2** /n/ a member of the human race.

إنسان *ʃinsaan* /n/ **1** person, human being. **2** *ʃil-ʃinsaan* **2a** frozen form equivalent to English 'one'. *ʃil-ʃinsaan laazim yiɛiif* one has to live! **2b** Man, mankind. *ʃil-ʃinsaan il-muɛaaṣir* contemporary Man. — /adj/ **3** humane, kindly. *di sitt*^{i} *ʃinsaana b-ṣaḥiiḥ* she is a woman full of human feeling.

إنسانيّة *ʃinsaniyya* /n/ **1** humanity, humanness. **2** human feeling, humaneness, kindliness.

أنيس *ʃaniis* /n/ companion, someone who keeps one company.

آنسة *ʃaanisa* /n pl *ʃawaanis, ʃaanisaat*/ title of, and form of address or reference to, a young unmarried woman ≈ miss. *ʃil-ʃaanisa faṭma* Miss Fatma.

آنس *ʃaanis* /vt/ to entertain (with one's company). *ʃindah-lu yiigi yʃanis-na hina* call to him to come and keep us company here. *ʃanistu* and *ʃanistuu-na* courteous formula expressed to guests ≈ you're very good company (the reply being *ʃalla yʃans-ak*). *ʃintu ḥa-tʃansu ʃimta* when will you be coming to visit us? - vn *miʃansa*; ava *miʃaanis*.

اتآنس *ʃitʃaanis* /vi/ passive of *ʃaanis*. - iva *mitʃaanis*.

استأنس *ʃistaʃnis* /vi/ **1** to be sociable, pass the time in a friendly manner. *humma qaɛdiin bi-yistaʃnisu maɛa baɛḍ* they're sitting having a friendly chat together. **2** to seek advice, consult. *ʃaḥibb astaʃnis bi-raʃy-ak fil-mawḍuuɛ da* I should like to ask your opinion on this subject. **3**↑ to become tame (of an animal). *ʃin-nimr*^{i} *miʃ mumkin yistaʃnis* tigers cannot be tamed. — /vt/ **4**↑ to tame (an animal). *bi-yiʃtiru ɛuruud wi-yistaʃnisuu-ha* they buy baboons and tame them. - vn *ʃistiʃnaas*↑; ava *mistaʃnis*; pva *mustaʃnas*↑.

ء ن س ^{2} see ء ن ت ^{1}: *ʃunuusa*

ء ن س و ن see ى ن س و ن: *ʃansuun*

ء ن ش ت
أنشته *ʃaniʃtah* <T *enişte*> /n/ *[obsol]* form of address or reference to a sister's husband (used by women).

ء ن ش و ج
أنشوجة *ʃanʃuuga* <It *acciuga*> /coll n/ anchovies.

ء ن ف
أنف *ʃanfˀ* /n pl *ʃunuuf*/ nose. ‖ *raɣm*^{i} *ʃanf-u* in spite of him.

أنفي *ʃanfiˀ* /adj/ nasal.

إنف *ʃinf* /n pl *ʃunuuf*/ **1** *[carp]* moulding around the frame of a door. **2** *[mus]* bridge at the angle on the neck of an *ɛuud* (see Pl.J, 9).

إنف *ʃinif* /adj */ finicky. *nifs-u ʃinfa* he has a finicky appetite.

أنفة *ʃanafa* /n/ self-respect, decent pride. *ɛandu ʃanafa* he has self-respect.

اتأنّف *ʃitʃannif* /vi/ to look down one's nose, affect a supercilious air. - ava *mitʃannif*.

استأنف *ʃistaʃnif* /vt/ **1** *[leg]* to appeal against. *ʃil-muḥaami staʃnif il-ḥukm* the lawyer appealed against the sentence. **2**↑ to resume. *ʃistiʃnaaf il-ɛilaqaat id-diblumasiyya* the resumption of diplomatic relations. - /the literary passive form also occurs/ *miʃ manẓuur il-ɛilaqaat tustaʃnaf qabl*^{i} *sana* it is unlikely that relations will be resumed before a year has passed. - vn *ʃistiʃnaaf*; ava *mistaʃnif*.

استئناف *ʃistiʃnaaf* /n/ *[leg]* appeal. *maḥkamit il-istiʃnaaf* the Court of Appeal. *muḥaami stiʃnaaf* a lawyer with enough seniority to appear before the Court of Appeal.

استئنافي *ʃistiʃnaafi* /adj/ *[leg]* pertaining to appeal.

ء ن ف ل –
إنفلونزا *ʃanfilwanza, ʃinfilwinza* <Engl> /n/ influenza, severe attack of common cold.

ء ن ك ل
أنكل، أونكل *ʃankil* <Engl> (also *ʃunkil* <Fr>) /n/ affectionate and respectful form of address and reference used by young people to uncles and also to men who are not close relatives ≈ uncle.

ء ن ك ل –
أنكلوستوما *ʃankilistooma* <perh Fr> /n/ *[path]* hookworm, ankylostomiasis.

ء ن ك ى س see ن ك س: *ʃinkiis*

ء ن م
الأنام *ʃil-ʃanaam* /n/ mankind. *xayr il-ʃanaam* best of mankind (epithet of the Prophet Muhammad).

ء ن م ى
أنيميا ʕanimya, ʕinimya <Engl> /n/ *[path]* anaemia.

ء ن ن [1]
أنّ ʕann *(i)* /vi/ to moan, groan. - vn ʕaniin; ava ʕaanin.

[2] (ء ن ن)
إنّ ʕinn **1** /conj introducing subordinate clause/ that. *wafiqt[a] ɛala ʕinni ḥ-aruuḥ* I agreed to go. *ɋaluu-li ʕinn il-maktab maqfuul* they told me that the office was closed. *ḥ-abɛat iltimaas ʕinnu yiqbal-ni* I'll send a request that he accept me. **2** particle used to emphasize a following statement. *ʕamma ʕinnak ḥumaar bi-ṣaḥiiḥ* you really are a complete ass!
¶ *maɛa ʕinn* /conj/ despite the fact that.
إنّة ʕinna /n pl *-aat*/ defect, drawback. *ʕil-bint' di laazim fiiha ʕinna lamma ygawwizuu-ha l-walad bif-fakl' da* this girl must have something wrong with her for them to marry her off to a boy of this type.

[3] ء ن ن see ء ن ا: ʕanaani, ʕananiyya

ء ن ن ا س
أناناس ʕananaas <Fr *ananas*> /coll n/ pineapple(s).

ء ن ن م ا
إنّما ʕinnama **1** /conj/ however, but. *ma-kunt'-ʃ b-abuṣṣ' l-ḥagaat zayy' di ʕinnama hiyya kaanit il-ḥaqiiqa ɛagbaa-ni* I used not to pay attention to such things, but the fact is she appealed to me. *huwwa ɛbaara ɛan ʃakuuf ʕinnama masluub* it's a type of hammer, but tapered. *ʕik-kalaam sahl' ʕinnama l-fiɛl' ṣaɛb* it's easy to talk but hard to act. **2** exclamatory particle ≈ what a ..., such a ..., really. *ʕiftareet ɛarabiyya ʕinnama ɛarabiyya* I've bought a car - such a fantastic car! *kalt' ʕakla ʕinnama min illi qalb-ak yiḥibb-a-ha* I ate a really delicious meal. *ḍarabt-u ɛalqa ʕinnama ɛaal* I gave him a really good hiding.

ء ن ه
أنهو ʕanhu /interrog adj (appositively also *ʕanhuu, ʕanhuun*), fem *ʕanhi* (appositively also *ʕanhii, ʕanhiin*), pl *ʕanhum* (appositively also *ʕanhumma*)/ which? *ʕanhu door* or *ʕid-door ʕanhu* (or *ʕanhuu* or *ʕanhuun)* which floor? *ʕanhi bint* or *ʕil-bint' ʕanhi* (or *ʕanhii* or *ʕanhiin*) which girl?

[1] ء ن ى
اتأنّى، تأنّى ʕitʕanna, *ta*ʕanna↑ /vi/ to act with deliberation and caution. *man ta*ʕanna naal ma tamanna *[prov]* he who acts with deliberation achieves what he desires. *bi-yiftaval bi-ta*ʕanni he works carefully and slowly. ‖*fit-ta*ʕanni s-salaama *(wi-fil-ɛagala n-nadaama) [prov]* (there is safety in caution and regret in speed) ≈ more haste, less speed. - vn *ta*ʕanni; ava *mit*ʕanni, *muta*ʕanni↑.
استنّى ʕistaṇṇa *(yistanna)* **1** /vt/ to wait for. *ʕil-ɛarabiyya ḥa-tistannaa-k* the car will be waiting for you. *ʕinta mistanni ʕeeh* what are you waiting for? **2** /vi/ to wait. *miʃ kunt' tistanna lamma ʕaṣḥa* couldn't you have waited till I woke up? *ʕistanna ɛalee* give him time. ‖*ma-ḥadd'-ʃ ḥa-yistanna* ≈ death comes to all. - *ʕistanna l-awarrii-k* just wait and I'll show you! - ava *mistanni*.
استأنى ʕisti*ʕanna*↓ /vi/ to work with care, act with deliberation. - ava *misti*ʕanni.

[2] ء ن ى
أوانى ʕawaani↑ /pl n/ vessels, containers

ء ه ء
إهئ ʕihiʔ onomatopoeia for the sound of crying or giggling.

ء ه ل
أهل ʕahl /n pl *ʕahaali*/ **1** family, family group, relatives. *ʕilli ma-luu-ʃ xeer fi-ʕahl-u ma-luu-ʃ xeer fi-ḥadd [prov]* he who does no good to his family does no good to anyone. ‖*ʕahl il-beet* the family of the Prophet Muhammad. - *wi-nta ma-l-ʕahl-ak [abus]* what business is it of yours? **2** people. *ʕahl il-balad* (or *ʕahaali l-balad*) the people of the town. *ʕahl il-yimiin* rightists. ‖*ʕahl is-sunna* Sunnite Muslims. - *ʕahl iṭ-ṭariiq* Sufis. - *ya-hl alla ya-lli hina* ≈ anyone at home? — *ʕil-ʕahaali* /pl n/ **3** the public. ‖*tuggaar il-ʕahaali* private sector merchants.
¶ *ʕahlan* (also *ʕahlan wi-sahlan*) interjection used (1) in greeting ≈ hi! hello! (2) in welcome ≈ (you're most) welcome! (3) in allowing and accepting (often critically) the freedom of others to act, as in *huwwa miʃ ɛaayiz yiigi* - *ʕahlan wa-sahlan* he doesn't want to come? he's free to do as he likes! *ɛaayiz tiɛabbar ɛan raʕy-ak* - *ʕahlan wa-sahlan* you have a perfect right to express your opinion. - *ʕahlan bi...* welcome to ...! *ʕahlan bis-sawra* welcome to the revolution! - *ʕahlan biik (biiki, biikum)* response to *ʕahlan* (1) and (2).
أهلى ʕahli /adj/ **1** privately owned, privately run, held as a concession from the government. *madrasa ʕahliyya* private school. *maktab bariid ʕahli* sub-post-office.

2 national. *ʃil-bank il-ʃahli l-maṣri* the Egyptian National Bank. *ʃin-naadi l-ʃahli* the National (Football) Club.

أهليّة *ʃahliyya* /n/ **1** family, kin. **2**↑ eligibility.

آهل *ʃaahil*↑ /adj/ populous, populated, inhabited. *ʃil-ɤaraat kaanit barḍu ɛal-manaaṭiq il-ʃahla bis-sukkaan* air-raids were also carried out over the populated areas.

مأهول *maʃhuul* = *ʃaahil*.

أهّل *ʃahhil* /vt/ to qualify, make qualified. *ʃis-sanawiyya l-ɛaamma tʃahhil-ni l-duxuul ig-gamɛa* the secondary certificate qualifies me to enter university. *markaz taʃhiil mihani* Occupational Training Centre. - vn *taʃhiil*; ava *miʃahhil*; pva *muʃahhal*.

مؤهّل *muʃahhil, muʃahhal* /n pl *-aat*/ **1** qualification. **2** *muʃahhilaat, muʃahhalaat* /pl n/ qualified persons, people with diplomas, certificates etc. ‖*ɛaskari muʃahhilaat* a soldier with a school certificate or diploma.

اتأهّل *ʔitʃahhal, ʔitʃahhil* /vi/ **1** to get married. *ʔitʃahhilt*^{i} *b-bint il-ħalaal* I got married to the right girl. **2** to become qualified, obtain qualifications. - ava *mitʃahhil*.

استاهل *ʔistaahil* /vt/ **1** to deserve, merit. *walad ma-yistahil-ʃ*^{i} *ʔilla ḍ-ḍarb* a boy who deserves nothing but a beating. **2** to be worth. *da yistaahil kaam fi-naẓar-ak* how much is this worth in your opinion? - ava *mistaahil*.

ءهو

أهو *ʔahu* /w foll n or pron (*ʔahu hiyya* often *ʔahiyya, ʔahu humma* often *ʔahumma*)/ introductory particle anticipating a word or clause that expands or comments on a statement or situation ≈ there you are, now you see. *ʔabiiɛ fi-dukkaana w-ʔahu tasaali* I'll open a small shop, and it'll be a way to keep busy. *ɛandu ʔinsaniyya yuqaf - ma-ɛanduu-ʃ ʔahu maafi* if he has any human feeling, he stops; if he hasn't, he keeps going. *miʃ ɤariiba - ʔahu huwwa w-hiyya zayy*^{i} *baɛḍ* it's no surprise; he and she are just the same. *miʃ qult-i-lik - ʔahu-nti geeti ʔiid-ik faḍya* didn't I tell you (that you'd come empty-handed), and here you are, empty-handed. *ʔahu kida l-boos walla balaaʃ* now that's what I call kissing!

أهو *ʔahú* /fem *ʔahí*, pl *ʔahúm*/ demonstrative drawing attention to a preceding or following noun. *ʔil-muzakkira maɛaaya ʔahí* I have the memo with me right here. *b-atkallim ɛarabi ʔahú* I'm speaking Arabic right now. *ʔahúm il-qumṣaan* here are the shirts.

ءهيه

أيهيه *ʔèheeh, ʔihiih* exclamation indicating disbelieving astonishment ≈ come off it!

ءو

أو *ʔaw* /conj/ or. *mumkin tiruuḥ min hina ʔaw hina* you can go either this way or that.

ء و ان[1] see ل و ان: *ʔiwaan*

ء و ان[2] see ء ن ى[2]: *ʔawaani*

ءوب

إياب *ʔiyaab: zihaab wi-ʔiyaab* there and back. *tazkara zhaab wi-ʔyaab* return ticket, round-trip ticket.

ءوت

أوت *ʔawit* <Engl> **1** /adj invar/ *[sport]* out, out of play (of a ball). **2** /adv/ **2a** *[sport]* out of play. **2b** astray, off the mark. **3** /n/ *[broadc]* output.

ءوج

أوج *ʔoog* /n/ *[mus]* name given to the note B half flat.

أويج *ʔawiig* /n/ *[mus]* mode in Arabic music having E natural and G flat.

ء و د see ء و ض

ء و ش ى see ء ش ى[2]: *ʔufiyya*

ءوض

أوضة، أودة *ʔooḍa* <T *oda*> /n pl *ʔuwaḍ, ʔiwaḍ, ʔoḍaat*/ **1** room. *ʃaqqa b-talat ʔuwaḍ* a three-room flat. ‖*ʔooḍit taftiiʃ* manhole, inspection shaft. **2** suite of furniture. *ʔooḍa xaʃab zaan* a beechwood suite. *ʔooḍit noom* (1) bedroom. (2) bedroom suite.

ءوفر

أوفر *ʔoofar* <Engl *over*> /fem n, pl *-aat*/ *[soccer]* overhead kick. *ħa-yiɛmil ʔoofar* he is going to kick it overhead. *bi-yirfaɛ-ha ʔoofar ṭawiila* he puts it up in a long overhead kick.

ء و ق ى see و ق ى[2]

ءول[1]

آل *ʔaal*[3] *(u)* /vi/ **1** to revert. *ʔaalit il-ʔamlaak li-ʔaṣḥab-ha l-ʔaṣliyyiin* the property reverted to its original owners. **2** to be destined, be bound, be certain (to do s.th.). *ʔil-ɛimaara di ʔayla lis-suquuṭ* this build-

ing is bound to collapse. - vn *ʕayalaan*; ava *ʕaayil*.

أوّل *ʕawwil*[1] **1** /adj invar, in nominal position/ first. *ʕawwil marra* the first time. *ʕawwil talat marraat* the first three times. || *ʕawwil ʃimbaariḥ* the day before yesterday. - *ʕawwil ʕawwil ʃimbaariḥ* the day before the day before yesterday. **2** /n pl *ʕawaaʃil*/ **2a** first part, beginning. *ʕawwil if-ʃahr* the first day of the month. *ʕawaaʃil if-ʃahr* the early part of the month. *min il-ʕawwil* (1) from the beginning. (2) in the first place. *ʃimsik il-xeeṭ min ʕawwil-u* hold the thread by the end. *min ʕawwil-u l-ʕaxr-u* from beginning to end of it. *ʃilli lu ʕawwil ḷu ʕaaxir [prov]* what has a beginning must have an end. || *ʕawwil bi-ʕawwil* on the spot, as soon as (it) comes, as in *xallaṣ fuṛl-ak ʕawwil bi-ʕawwil* do your work as soon as it comes to you (don't wait for it to accumulate). **2b** top scorer (in an examination etc.). *ʕawaaʃil il-faṣl* the top students in the class. **2c** the half of the domino which is not matched with a domino on the board. *gihaar wi-ʕawwil-u bis-sih* a domino with a four matching a four on the board and a three unmatched. *ʕawwil-ak ya dooh wi-nta bil-beef* here is a two (to match a two on the board) paired with a five.

¶ *ʃil-ʕawwil* /adv/ at first, first of all. *da kaan il-ʕawwil* that's how things used to be. *ma-baqit-ʃ' tfuut ɛala ʃumm-i zayy il-ʕawwil* she stopped dropping in on my mother the way she used to. *ṭammin-ni l-ʕawwil* set my mind at rest first. *ʃil-ʕawwil bi-tliff il-balad* first of all you go round the village. - *ʕawwil ma* /conj/ as soon as. *ʕawwil ma tḥuṭṭ' rigl-ak fil-beet ɛaayiz tiqawwim fii xinaaqa* as soon as you enter the house, you want to start a quarrel. *ʕawwil ma ʕaakul il-luqma tuqaf ɛala qalb-i* the moment that I eat my meal, it sets off heartburn.

الأوّلة *ʃil-ʕawwila* /n/ *[frozen contexts]* the first stage or part. *ʃil-ʕawwila ɛasal wit-tanya baṣal [prov]* the first part is honey (i.e. nice) and the second onions (i.e. horrible) (said especially of marriage). *ʃil-bani ʕaadam ya b-ʕawwilt-u ya b-ʕaxrit-u [prov]* man gains either this world or the next. *ʃil-ʕawwila bi-sm-illa wit-tanya bi-sm-illa wit-talta bi-sm-illa* the first is in the name of God, and the second is in the name of God, and the third is in the name of God (a magic formula to exorcise the evil eye, often accompanied by rubbing of the sick person with the leaves of a corn cob). *ʃil-ʕawwila ʕaah wi-tanya ʕaah wit-taalita ʕaah* the first line of each section of a certain tripartite form of a *mawwaal*. || *ʕawwilt imbaariḥ* the day before yesterday. - *ʃil-ʕawwila* call by rag-ball player at the first service of each round.

أوّلكشى *ʕawwilakfi* /adv/ **1** first of all. *ʕawwilakfi gum yizuruu-na w-baɛdeen* ... first, they came and visited us, and then .... *daxalt il-maktab wi-ʕawwilakfi w-ʕana b-aftaḥ id-durg' ṣubaaɛ-i tɛawwar* I went into the office and straightaway hurt my finger as I was opening the drawer. **2** not before, only. *ʕawwilakfi n-nahar-da ṣ-ṣubḥ* only this morning and not before.

أوّل *ʕawwal*↑ **1** /adj, fem *ʕuula*, pl *ʕawaaʃil, ʕuwal*/ first. *ʃid-dars il-ʕawwal* the first lesson. *ʃiṭ-ṭalaba l-ʕawaaʃil* the top students. *ʃiṣ-ṣafḥa l-ʕuula* the front page (of a newspaper). *mufattiʃ ʕawwal* chief inspector. || *mulaazim ʕawwal [mil]* lieutenant. *-fi-ʕuula* in the first year (at school). **2** /n/ First of all (epithet of God).

¶ *ʕawwalan* /adv/ firstly (in enumeration).

أوّلى *ʕawwali* /adj */ basic, primary. *ʃisɛaaf ʕawwali* or *ʃisɛafaat ʕawwaliyya* first aid. *taɛliim ʕawwali [obsol]* basic education (not leading systematically on to further stages).

أوّليّات *ʕawwaliyyaat* /pl n/ basics.

أوّلانى *ʕawwalaani* /adj */ first, initial. *ʃil-faṣl il-ʕawwalaani* the first classroom. *ʃit-talatt uʃhur il-ʕawwalaniyyiin* the first three months. *ʃil-ɣalaṭaat il-ʕawwalaniyya* the initial mistakes.

ء و ل[2]

أوّل *ʕawwil*[2] /vt/ to misinterpret deliberately, twist (facts etc.). *ʃinta bi-tʃawwil kalaam-i b-ʃakl' variib* you're twisting my words in an amazing way! - vn *taʃwiil*; ava/pva *miʃawwil*.

مأوّلاتى *miʃawwilaati* /n pl *-yya*/ twister, garbler (of facts etc.).

اتأوّل *ʃitʃawwil*↑ /vi/ to be misinterpreted deliberately, be twisted (of facts). - iva *mitʃawwil*.

ء و ل[3]

أولة *ʃuula* /n/ hopscotch.

ء و ل ج see ء ل ج ى: *ʃaɣlugiyya*

ء و م

أوم *ʃoom* <Engl> /n/ *[elec]* ohm.

ء و ن

آن *ʃaan*[1] /vi/: *ʃaan il-ʃawaan* the time has come, as in *ʃaan il-ʃawaan nitgawwiz baqa* it's high time we got married, *ma-ʃan-ʃ il-ʃawaan nimʃi* it's not yet the right time for us to leave.

آن *ʃaan*[2]↑: *min ʃaan li-ʃaaxar* from time to time, now and then.

¶ *ʃil-ʃaan*↑ /adv/ now. *ḥatta l-ʃaan* up to now.

أوان *ʕawaan* /n/ **1** appointed time. *kull' feeʃ bi-*

ʕawaan-u` *[prov]* there's a proper time for everything. *baɛd^{i} fawaat il-ʕawaan* too late. *ga min ɤeer ʕawaan* he came unexpectedly. **2** season. *ʕawaan il-manga* the mango season.

ء و ن ط
أونطة *ʕawanṭa* <T *avanta*> /n/ trickery, deceit. *ʕis-sagaayir il-yomeen dool ʕawanṭa* cigarettes these days are a fraud. || *sinima ʕawanṭa haatu flus-na* the chant from the cheap seats of the cinema when the projector breaks down. - /adverbially/ *bi-yirkabu ʕawanṭa* they ride without paying. || *raaḥ ʕawanṭa* he lost everything to no purpose.
أونطجي *ʕawanṭagi* /n pl *-yya*/ cheat, swindler.

ء و ه [1]
أوه *ʕooh* exclamation of exasperation. *ʕana ɋalb-i ḥaasis ʕinn^{a} ḥa-yiḥṣal ḥaaga miʃ kiwayyisa.* - *ʕooh ḥa-yiḥṣal ʕeeh bass* 'I have a foreboding that something bad is going to happen.' 'For Heaven's sake, what could possibly happen?'

ء و ه [2] see also ء ا ه
اتأوّه *ʕitʕawwah* /vi/ to moan with pain or distress. - vn *taʕawwuh*↑; ava *mitʕawwah*.

ء و ى [1]
مأوى *maʕwa* /n pl *maʕaawi*/ refuge.
إيواء *ʕiiwaaʕ*↑ /n/ provision of shelter. *muʕassasaat ʕiiwaaʕ* organizations for housing the destitute.

ء و ى [2]
أوية *ʕuuya* <T *oya*> /n/ variety of handworked edging (on the head-kerchief traditionally worn by women).

ء و ى [3]
أوى *ʕawa^{1} (i)* <prob Copt> /vt/: *ga-k ʕawa yiʕwii-k ʃabus,* may misfortune befall you!
أوى *ʕawa^{2}* /n/ see *ʕawa^{1}*.

ء و ى م see ء ى م

ء ى
أى *ʕay*↑ /conj/ in other words. *ʕit-tawaagud hina ʕiɛtibaari ʕay ʕinn il-muwaẓẓaf yuɛtabar mawguud ʕiza kaanit jakittit-u mawguuda* we consider presence here as purely a matter of form, i.e. the official is considered to be present if his jacket is.
¶ *ʕay* (or *ʕay) naɛam* it is true ... (but) ..., as in *ʕay naɛam ʕinni ɋarabt-u laakin huwwa yistaahil* it's true I hit him but that's only what he deserves. - *ʕay* or *(ʕay) w-allaahi* (1) honest to God! (2) yes indeed! how true that is!

ء ى ب see ء و ب: *ʕiyaab*

ء ى د see also ى د and ى د د
إيد *ʕiid* /fem n, pl *ʕideen, ʕayaadi*, w pron suff *ʕidee-* (1st sing *ʕiday-ya*, 3rd pl also *ʕiden-hum*)/ **1** hand, (loosely also) wrist, arm. *xaduu min ʕiid-i* they took it out of my hand. *rigiɛ wi-ʕiid-u faḍya* he returned empty-handed. *baɋit zayy il-ɛagiina f-ʕiid-u* she became like putty in his hands. *laabis saaɛa f-ʕiid-u* wearing a watch on his wrist. *ʕil-mawḍuuɛ fi-ʕiid-i* the matter is in my hands, I have taken charge of the matter. *ɛala ʕiid-ak if-ʃimaal* on your left. *sitt^{a} ɛaguuza masnuuda ɛala ʕiid-u* an old lady leaning on his arm. *bi-yiɛmil-ha b-ʕiid-u* (1) he makes them himself. (2) he makes them by hand. *bi-yiɛmil-ha ɛala ʕiid-u* (1) he makes them by hand. (2) he has them made under his supervision. *ʕiid ɛala ʕiid tisaaɛid [prov]* many hands make light work. *ʕilli ʕiid-u fil-mayya miʃ zayy illi ʕiid-u fin-naar [prov]* (he whose hand is in water is not like him whose hand is in fire) ≈ you can't advise one in a situation different from your own. ||*midd^{i} ʕiid-ak* (1) help yourself! (as an invitation to eat). (2) lend a hand! join in! - *ʕiid-u xafiifa* he's light-fingered - *ʕiid-u naffa* he's tight-fisted. - *ʕiid-u ʈwiila* he's a thief. - *ʕiid-u waɋfa* he's a poor worker. - *ʕiid-u salka* he's a skilled worker. - *ʕiid-u maxruuma* or *ʕiid-u sayba* he's open-handed, he's extravagant. - *ʕilli f-ʕiid-u miʃ lu* he's very generous. - *ɛala ʕiid(-)* in (his) presence, in front of (his) eyes, as in *xallii-k ɛala ʕiid-u lamma yxallaṣ if-fuɤl* stay close by him till he finishes the job, *kull-u kaan ɛala ʕiid-ak* it all happened in your presence. - *ɛala ʕiid-ak ya ʕusṭa* stop here, driver! - *lamma tuɋaf ɛala ʕiid-ak [prov]* (when you stand on your hand) ≈ when pigs fly. - *ɛala ʕideen* at the hands of, by way of, as in *ʕil-ḥaẓẓ^{i} gaa-li ɛala ʕideen waaḥid ɤariib* good luck came to me at the hands of a stranger. - *ʈalab ʕid-ha* he asked for her hand in marriage. - *ʕagwaz-hum fi-ʕidee-hum* their husbands are under their thumbs. - *fi-ʕiid-(u) ʕinn* ... it is in (his) power to ..., as in *fi-ʕiid-ik ʕinnik tinawwari ḥayaat-ik* it's in your power to brighten your life. - *ʕiid-ak ɛala* give, hand over! as in *ʕiid-ak ɛala ʃilin* hand over five piastres! - *ʕiid wara w-ʕiid ɋuddaam* empty-handed. - *ʕana min ʕiid-ak di l-ʕiid-ak di* I'm completely at your disposal. - *ʕiid-i ɛala ʕiid-ak* lead on! - *ʕiid-i f-ʕiid-ak* let's co-operate! - *huwwa ʕiid-i w-rigl-i* I can't do without him. - *la min ʕiid-u wala min rigl-u* in no way con-

nected with him. - *ʕiid-ak wil-ʕarḍ* it's a hopeless case. *ʕiid-ak minnu wil-ʕarḍ* he's a hopeless case, you can't depend on him for anything. **2** foreleg (of an animal). **3** handle (cf *yadd*). *ʕiid miqaffa* broom handle. ‖*ʕiid hoon* pestle.
أيّد *ʕayyid* /vt/ to support. - vn *taʕyiid*; ava *miʕayyid*.
اتأيّد *ʔitʕayyid* /vi/ to be supported. - iva *mitʕayyid*.

ء ي ر
إير *ʔiirˀ* /n pl *ʕuyuur*/ penis.

ء ي ز ي
إيزي *ʔiizi* <Engl> **1** /adj invar/ easy, relaxed. *bintˈ ʔiizi* an easy lay. **2** /adv/ easily, relaxedly. *xud il-ḥikaaya ʔiizi* take the matter simply.

ء ي س [1]
أيس *ʕaayis* /vi/ to act with desperate courage, take a great risk when faced with no alternative. *tigii-f niʕaayis - ya qaatil ya maqtuul* let's do our damnedest - all we have to lose is our lives! - vn *miʕaysa*; ava *miʕaayis*.

ء ي س [2] see ء ا ي س : *ʕaayis*

ء ي ش
أيش *ʕeef* /interrog pron/ what? (mainly in proverbs and set phrases). *ʕeef ɣarraf-ak* how did you find out? *ʕeef tiɣmil il-maʃa fil-wiff il-ɣikir [prov]* (what can the tire-woman do with an ugly face?) ≈ you can't make a silk purse out of a sow's ear. *ʕeef gaab li-gaab* ≈ there is no comparison, the one is not a patch on the other. *ʕeef ḥaal law* ... what would happen if ..., as in *ʕeef ḥaal baqa law libist-i-lku l-badla l-kuḥli* (if you think I look smart now) what would you say if I put on the navy-blue suit for you!
إسمعنى *ʔismiɣna* /interrog part/ **1** why (this) and not another? *ʔismiɣna ʕana* why pick on me? **2** response formula in *qafya* jokes (see *qafya*).

ء ي ض
أيضا *ʕayḍanˀ* /adv/ also.

ء ي ل ا
أيلا *ʕeela* <prob Copt>: *ʕeela ʕubb, ʕeela ʕubba* ≈ heave ho! - also *heela*.

ء ي ل ي -
آيلاينر *ʕaylaynar* <Engl> /n/ eyeliner.

ء ي م
أويمة *ʕuyma* <T *oyma*> /n/ **1** wood-carving, decorative relief work in wood. **2** plastic mouldings for decorating wall panels, fitted cupboards, ceiling, etc.
أويمجى *ʕuymagi* /n pl *-yya*/ wood-carver, carpenter specializing in decorative relief work.

ء ي ن [1]
أيون *ʕayuun* <Engl> /n pl *-aat*/ *[elec]* ion.
أيّن *ʕayyinˀ* /vt/ to ionize. - vn *taʕyiin*; ava *miʕayyin*.
اتأيّن *ʔitʕayyin* /vi/ to be ionized. - iva *mitʕayyin*.

ء ي ن [2]
أيون *ʕuyun, ʕuyin* <T *oyun*> /n pl *-aat*/ **1** ordinary win in backgammon, where the loser has succeeded in removing at least one of his men from the board (cf *mars*). **2** *[coarse slang]* an instance of sexual intercourse, a lay.

ء ي ه
أيه *ʕeeh* **1** /interrog pron/ what? *bi-tquul ʕeeh* what do you say? *niɣmil ʕeeh* what can (or: shall) we do? *ʕeeh il-balaawi di* what's all this trouble? *ḥa-tiqlibii-ha ʁamimˈ walla ʕeeh* are you going to turn nasty about it, or what? *feen il-filuus. - filuus ʕeeh* 'Where's the money?' 'What money?' *maɣaak filuus qaddˈ eeh* how much money do you have with you? ‖ *ʔiḥna f-ʕeeh walla f-ʕeeh* what's that got to do with the matter in hand? *- ya-bn il-ʕeeh* you son of a so-and-so! **2** /rel pron/ *xallii-na nʃuuf ʔintu ɣamaltu ʕeeh* let's look at what you've done.

ء ي و ه
أيوه *ʕaywa* <Copt> /interj/ yes.

ء ي ي [1]
أيّ *ʕayy* **1** /adj invar/ any. *fi-ʕayyˈ waqt* at any time. *ɣala ʕayyˈ ḥaal* in any case. *ʕayyˈ waaḥid* anyone. *ɣandak ʕayyˈ fikra ɣan il-ʕuwaq* do you have any idea about the rooms? **2** /interrog adj invar/ what? *bi-ʕayyˈ ḥaqq* by what right?
أيّها *ʕayyuha* /as *ʕayy* 1, but emphatic/ any ... at all. *ʕayyuha ḥaaga* any old thing. *fi-ʕayyuha maɣhad* in some institute or other. *laa ʔinta wala tafiida wala simsima wala ʕayyuha maxluuqin kaan* not you, nor Tafida, nor Simsima, nor any living soul.

ء ي ي [2]
أيّ *ʕayy* sound expressing pain.

ء ي ي ا

إيّا ʔiyyaa- **1** /w 3rd pers suff/ demonstrative particle signalling identity (often with a pejorative connotation). *ʔil-bint iyyaa-ha* that girl - you know who. *wirk il-wizza ʔiyyaa-ha* the leg of that very same wretched goose (we've all been talking about). *ʔig-gamaaʕa ʔiyyaa-hum* these people, you know whom I mean.

2 /w 2nd pers suff/ introductory particle signalling prohibition. *ʔiyyaa-k tihawwib gamb il-baab* don't you dare go near the door! *ʔiyyaa-k hiyya tiigi hina taani* she'd better not come here again! **3** /w 2nd pers sing suff/ introductory particle signalling hopefulness. *ʔiyyaa-k yikuunu r-rukkaab kull-u-hum sulaam* I hope all the passengers are safe!

ء ي ي ا ه

أيّاه ʔayyaah /interj/ *[children]* **1** what a shame! **2** you're going to be in trouble!

ء ي ي ه ا see ء ي ي ١: ʔayyuha

ء ي ي و ب

أيّوب ʔayyuub /prop n/ Job. *ṣabr ʔayyuub* the patience of Job.

ء ي ي و ه

أيّوه ʔayyuuh <Copt> *[non-Cairene]* interjection signalling **1** emphatic confirmation. *bi-tifham fil-ʕarabiyyaat. - ʔayyuuh ʔilla b-afham fil-ʕarabiyyaat* 'Do you know anything about cars?' 'You bet I know about cars!' **2** forceful intent. *ʔayyuuh ya gidʕaan ḫ-aḍrab-u ḫittit ʕalqa* just wait, lads, till you see the beating I give him!

ب

(ب)

ب *bi-*[1] /before 1st person sing *b-*/ verb prefix with imperfect indicating continuous or habitual action. *bi-tiʕmil ʃeeh* what are you doing? *b-aruuḥ hinaak kull' yoom* I go there every day. *bi-yikkallim ʕarabi kwayyis* he speaks Arabic well. *kaan bi-yidris barra* he was studying abroad.

ب *bi-*[2] /w 1st person sing pron suff *biyya*, w 3rd person sing masc *bii*; other pron suffs *bi(i)-*/ preposition indicating **1** instrument or means. *m-aḥibb'-ʃ ʃasaafir bil-qaṭr* I don't like to travel by train. *mumkin yitḥassin bit-tamriin* he may improve with training. *bi-tiftar bi-ʃeeh* what do you have for breakfast? **2** cause. *mabsuuṭ bi-wuguud-ak* happy you are here. *miʃ qaadir ʃaqul-lak farḥit-i biik qadd' ʃeeh* I can't tell you how happy you make me! *nifs-i f-ʕayyil ʃafraḥ bii* I am longing for a child to rejoice in. **3** manner or mode. *gayy' b-surʕa* coming quickly. *kallim-ha b-ḥinniyya* he spoke to her kindly. *ḥaẓẓ-u bil-maqluub* he is unlucky. *xadt ik-kitaab minnu b-diḥk* I kidded him into giving me the book. *ṭabaxit bi-nifs* she cooked willingly. **4** accompaniment or concomitance. *ʃaay bi-laban* tea with milk. *xud iʃ-ʃaqqa bil-ʕaff illi fiiha* take the flat together with the furniture in it. *fii ḥadd' hina bil-ʃism' ḍa* is there anybody here with that name? || *la biyya wala ʕalayya* minding my own business. - *biina* or *yalla biina* ≈ let's go! - *ʃahlan biik* conventional response to *ʃahlan wa-sahlan*. **5** span of time or occasion in time. *yiṣuum bin-nahaar wi-yiftar bil-leel* he fasts by day and breaks his fast at night. **6** equivalence in sale or recompense. *ʃil-ʕeen bil-ʕeen* an eye for an eye. *ʃiftareet kiilu quuṭa b-xamsa saaɤ* I bought a kilo of tomatoes for five piastres. *ḍufr-i b-raqabt-u* (my fingernail is worth his neck) ≈ he's not worth my little finger. *ʃitneen fi-xamsa b-ɤafara* two fives are ten. **7** degree of separation, amount of difference. *biʕiid ʕannu b-ʃarbaʕt imtaar* four metres away from it. *ʃakbar minnak bi-yoom yiʕraf ʕannak bi-sana [prov]* (he who is) older than you by one day knows more than you by a whole year. **8** standard of measurement, criterion. *bi-ybiiʕ il-qumaaʃ bil-mitr* he sells the cloth by the metre. *ʃil-iʕtiqaad da xaaṭi ʃ bil-mafhuum ig-gidiid* this belief is wrong according to the new understanding. *goz-ha bi-yɤiib bis-sana* her husband stays away for a year at a time. *ʃana b-aftaɤal bil-yomiyya* I work by the day (i.e. I am paid by the day). *qasuu bil-milli* (1) they measured it by the millimetre. (2) they measured it accurately. **9** sequence or succession. *ʃiddii-ni taqriir yoom bi-yoom* give me a report day by day. *ʃimʃi xaṭwa b-xaṭwa* ≈ go very slowly. *mallii-ni kilma b-kilma* dictate to me very slowly. *xallii-na niṣṣarraf waḥda b-waḥda* ≈ let's act very cautiously.

¶ ... *bi-ma fii-ʔ* ... including ..., as in *ʃil-luḥuum mamnuuʕa bi-ma fiiha s-samak* flesh is forbidden, including fish. - *bi-ma ʃinn* /conj/ since, in view of the fact that, as in *bi-ma ʃinnak ma-gibt'-ʃ huduum-ak tibqa trawwaḥ* you go home since you haven't brought your clothes. - *bi-duun* see *duun'*.

ب ا ء

باء *baaʃ* /fem n, pl *-aat*/ second letter of the Arabic alphabet. - also *bih, beeh*.

ب ا ب see ب و ب : *baab*

ب ا ب ا[1]

بابا *baaba* <Gr *pappas*, cf also P and T *baba*> /n/ **1** /pl *babawaat*/ *[Chr]* pope, pontiff, patriarch. **2** /no pl/ daddy, father. || *baaba ɤannuug* dip made of sesame paste, garlic and mashed roasted egg-plant. - *ʕala baaba* ≈

whose leg do you think you're pulling?! **3** /no pl/ affectionate form of address to the very young.
بابوى *baabawi* /adj */ *[Chr]* papal, patriarchal.

ب ا ب ا (2)
بابة *baaba*[1] /n pl *-aat*/ *[obsol]* text of a shadow puppet play.
بابه *baaba*[2] <Copt> /n/ second month of the Coptic year (mid-October to mid-November). *baaba xuff*[i] (or *ʕudxul) wi-qfil il-bawwaaba* Baaba, come in and close the door (against the cold). *zarɛ*[i] *baaba yirlib innahhaaba* the crops planted in Baaba (are so great that they) overwhelm plunderers.

ب ا ت ا
باتا *baata: ħaata baata* see *ħaata*.

ب ا ح see ب و ح : *baaħa*

ب ا د ى
بادى *baadi* /nonce word/: *ħaadi baadi siidi mħammad il-bavdaadi* (or *il-buvdaadi) ʃaal-u w-ħaʈʈ-u ɛalaa-di* children's counting rhyme ≈ eenie-meenie-mynie-mo etc.

ب ا ر (ب)
بار *baar*[1] <prob Engl> /n pl *-aat*/ **1** bar, bar room. **2** drinks cupboard.
بار *baar*[2] <poss Fr *barre*> /n/ *[auto]* axle.
بارة *baara* <T *para*> /n pl *-aat*/ *[obsol]* one-fortieth of a piastre, one-fortieth of a piastre piece.

ب ا س see ب ء س : *baas*

ب ا ش ا
باشا *baaʃa* <T *paşa*> /n pl *-waat*/ **1** Pasha, formerly a title of, and form of address and reference to, highest ranking officers and officials, now commonly used in respectful address to high officials (particularly police officials). **2** term of address used to both men and women to indicate familiarity. *ʃuuf ya baaʃa - ʕin kaanit ʕuxt-ak ɛayza tsaafir laazim tisaafir maɛaaha* look, old chap, if your sister wants to go on a journey, you must go with her. ‖ *ya baaʃa* flirtatious remark to a woman in the street ≈ how pretty! **3** supercilious person. *ʕaxuu-k da baaʃa* that brother of yours doesn't give a damn about anything.

ب ا ص (1)
باص *baaṣ* (also *bas*) <Fr *basse*> /n pl *-aat*/ *[mus]* **1a** double-bass. **1b** viola da gamba, cello. **2a** bass line in music. **2b** left hand music for piano. **2c** left hand bass buttons on an accordion. - /adj invar/ **3** bass.

ب ا ص[2] see ب ص ى : *baaṣa*

ب ا ط (1)
باط *baaʈ*[1] /coll n/ sycamore figs, not slit open when small, and therefore inedible when ripe.
باطة *baaʈa*[1] /pl *-aat*/ unit noun of *baaʈ*[1].

ب ا ط (2)
باط *baaʈ*[2] /n pl *-aat*/ **1** armpit. ‖ *baaʈ-u win-nigm* he has nothing to his name, he's flat broke. - *xad(-u)* (or *gaab (-u)) taħt*[i] *baaʈ-u* to gain control over (s.o.), as in *ʈabɛan ħaal-u maaʃi ʕiza kaan waaxid ħatta l-mudiir taħt*[i] *baaʈ-u* of course he's doing all right since he's got even the director under his thumb. - *xaff*[i] *fii baaʈ* or *nizil wayyaa baaʈ* he wrestled with him (using his arms). **2** *[naut]* chine.
باطة *baaʈa*[2] <It *patta*>: *ʈiliɛ baaʈa* (1) to come out a draw, as in *ʈilɛu baaʈa* they drew, *ʕil-ɛaʃara ʈilɛit baaʈa* the round ended in a draw. (2) to be fruitless (of effort), be vain (of an attempt).

ب ا ط س
باطس *baaʈis* /n/ strip of leather between the sole and insole of a shoe.

ب ا ع see ب و ع[1] : *baaɛ*[1]

ب ا غ
باغ *baaɣ* <T *bağa*> /n/ **1** tortoise-shell. **2** celluloid.
باغة *baaɣa* /n pl *-aat*/ **1** piece of celluloid. *baaɣit saaɛa* watch glass. **2** collar stay, collar stiffener.

ب ا ق
باق *baaq* <perh Copt>: *ʕarq*[i] *baaq* land into which the remains of a *barsiim* crop have been ploughed to fertilize it.

ب ا ك
باك *baak* <Engl> /n pl *-aat*/ **1** *[soccer]* back. *baak raayit* right back. *sird*[i] *baak* third back. **2** backhand in tennis, ping-pong, and other racket sports.

ب ا ك م
باكم *baakim* <perh Engl *vacuum*> /n/ hydraulic system. *zeet baakim* hydraulic fluid.

ب ا ك و
باكو *baaku* <It *pacco*> /n pl *bawaakı, bakuwaat, bakaawiˈ*/ packet, pack. *bawaakı duxxaan saayib* packets of loose tobacco. *baaku ʃaay* packet of tea.

ب ا ل ¹
بالة *baala¹* <It *balla*> /n pl *-aat*/ bale. *baalıt ʇuṭn* a bale of cotton. ‖*lissa ʇaaliʒ mıl-baala* brand new

ب ا ل ² see ب ل ى ²: *baal¹*

ب ا ل ت
بالت *baalit* <perh Fr> /n pl *-aat*/ (painter's) palette.

ب ا ن
بان *baan* /n/ *[bot]* Egyptian willow (Salix aegyptica). *ʏuṣn il-baan* epithet for a woman with a slender and graceful figure.

ب ا ن ا
بانا *baana. ɦaana w-baana* this and that. *sibna-haa-lak been ɦaana w-baana* we've left the matter for you to decide between this (solution) and that.

ب ا ه
باه *baah¹* <Copt> /n pl *-aat*/ penis.

ب ا ى
باى *baay* <prob Copt>: *ya baay* exclamation of incredulous dismay. *da b-yiʕmil ʕamaayıl - ya baay* or *ya baay ʕala ʕamayl-u* my! he does such outrageous things!

ب ا ى ب see ب ى ب: *baayıb*

ب ء ب
بأبأ *baʃbaʃ* /vi/ to bleat. - vn *baʃbaʃa*; ava *mıbaʃbaʃ*.

ب ء ر see ب ى ر ¹: *biir, buʃra, buʃrı*

ب ء س
بأس *baʃs, baas: la baas* or *la baʃs" ʕala ...* a get-well wish ≈ I hope it's nothing serious. *la baʃs¹ bi-ˈ* not insignificant, not bad, as in *kımmıyya la baʃs¹ bitha* a not insignificant quantity, not a bad quantity.
بؤس *buʃs* /n/ misery. - /adjectivally/ *ʕiʃa buʃs* a miserable life.

ب ء و ن
بؤنة *baʃuuna* <Copt> /n/ tenth month of the Coptic year (June to July). *baʃuunit il-ɦagar* stone-dry Ba'una. *fi-baʃuuna la yındırıb ʇuub wala ıtʕimıl muuna* in Ba'una mud bricks should not be set, nor should mortar be made. *baʃuuna bı-maffıʃ ıl-mayya mız-zır* Ba'una dries the water out of the *zır*.

ب ب ا ظ
بباظ *babaaẓ* /coll n/ papaya (Carica papaya).

ب ب ا ى ا
بايا *babaaya* <Sp> /coll n/ papaya

ب ب ب
ببّه *babba* /interj/ *[children]* ≈ I am cross with you!
ببّة *bubba* /interj/ *[children]* warning to a child in danger of falling

ب ب ت ر
بيتره *bıbıtra, pıpıtra* <Fr *pupitre*> /n pl *-aat*/ music stand.

ب ب ب غ -
ببّغان *babbaʏaan* /n pl *-aat*/ parrot. - also *baʏbaʏaan*.

ب ب ل و ه
بيلوه *bibilooh* <Fr *bibelot*> /n pl *-aat*/ knick-knack.

ب ب ل ى ن
بوبلين *bublin* <Engl or Fr> /n pl *-aat*/ poplin.

ب ب ن ا ج
بوبيناج *bubınaaj* <Fr *bobinage*> /n/ *[elec]* **1** coil *sılk il-bubınaaj* (insulated) wire for coils. **2** coil system, armature. - also *bubına*.

ب ب و ر
بابور *babuur* (also *baguur¹*) <perh It *vapore*> /n pl *bawabiir (bawagiir), bawabiir (bawagiir)*/ **1** (primus) stove. *babuur sıbırtu* spirit stove. *babuur gaaz* primus stove. **2** ship, motor-driven vessel. **3** locomotive, train. *babuur bıqaaʕa* goods train. *babuur ʃıksıbrees* express train. **4a** engine or motor. *babuur ʕarabıyya* car engine. **4b** any of a variety of machines driven by a motor or engine. *babuur ıl-ɦarıqa* fire-engine. *babuur ʇɦın* grist mill. *babuur ɦalıg* ginning factory. *babuur zalaṭ* steamroller. - also *wabuur*.

ب ب و ن ج
بابونج *babuunig. ʃuɦ babuunig* camomile. - also *babuuni*.

ب ب و ن ى
بابونى *babuuni. fiih babuuni* <P *bâbûna*> camomile. - also *babuunig.*

ب ب ى ن
بوبينه *bubiina* <It *bobina*> /n pl *-aat/* **1** bobbin, reel, spool. **2** *[elec]* coil - also *bubinaaj*

ب ب ى ه [1]
بيبه *bibeeh* <Fr *bébé*> /n pl *-aat/* baby.
بيبهاى *bibehaati* /adj/ pertaining to babies, babyish.

ب ب ى ه [2]
بيبيه *bibiih* <Fr *pipi*> /n/ *[children]* urine. *ɛamal bibiih* to urinate.

ب ب ى و ن
بيبيونه *babyuuna* <Fr *papillon*> /n pl *-aat/* bow tie.

ب ت ا ج
بوتاح *butaaj* <Fr *potage*> /n/ soup.

ب ت ا س
بوتاس *butaas* <Fr *potasse*> **1** potash. **2** lye. ‖*butaas ʕamrikaani* a stain remover made from lye. - also *buṭaas*

ب ت ا ع
بتاع *bitaaɛ* /in constr; fem *bitaaɛit*, pl *bituuɛ*/ nominal, in free and appositional constructions, indicating **1a** possession. *ʕil-musaddas bitaaɛ-i* (1) my pistol. (2) the pistol is mine. *ʕif-fanṭa btaɛit-ha* (1) her bag. (2) the bag belongs to her. *ʕik-karaasi btuɛ-na* (1) our chairs. (2) the chairs are ours **1b** concomitance. *ʕil-faraamil bitaaɛit il-ɛarabiyya* the car brakes. *ɛaff' zayy' btaaɛ ʕoḍt-ak* furniture like that in your room. **2a** association. *ʕir-raagil bitaaɛ il-ɡuuṭa* the man with the tomatoes, the tomato vendor. *bitaaɛ il-laban* the milk man. *bituuɛ il-fann* those who have to do with art, i.e. artists, art dealers etc. *raagil bitaaɛ rabb-i-na* a pious man. *ʕinti ya btaaɛit ḥasan* you, Hasan's woman! **2b** /w indef n/ ascribability, tendency or inclination. *da kalaam bitaaɛ sittaat* that's womanish talk. *miʃ bitaaɛ masʕuliyya* an irresponsible type. *bitaaɛ ʕafkaar* shrewd. *ʕana miʃ bitaaɛ gawaaz* I'm not the marrying type. *fitiwwaat bituuɛ xinaaq* quarrelsome bully-boys. *bitaaɛ niswaan* philanderer. ‖*bitaaɛ ɛiyaal* pederast, child molester. - *bitaaɛ ʕeeh* (1) why? what for? as in *bitaaɛ ʕeeh taaxud gineeh* why should you take a pound? (2) how come? as in *bitaaɛ ʕeeh ma-ɡult'-luu-ʃ* how come you didn't tell him? **3** genitive relationship. *ʕis-sittaat bituuɛ ʕingiltira* the women of England, English women. *ʕil-ʕasaar bitaaɛit maṣr* Egypt's historical monuments. *bitaaɛ zamaan* of a long time ago, of the old days. **4** approximation. *bitaaɛ saaɛa* about an hour. *gibt' btaaɛ kiilu* I brought about a kilo. — /standing independently/ **5** (and) what not, (and) so on. *ruḥna s-suuɡ wi-btaaɛ* we went to the market and so on. *yimkin nilaaɡi ḫittit gild' (w-)bitaaɛ* we may find a bit of leather or what not. **6** *ʕil-bitaaɛ* **6a** the thingumajig, the whats-its-name, the doings. **6b** *[euphem]* sexual organ.

ب ت ت [1]
بتّ *batt' (i)* /vi/ to come to a decision, reach a decisive conclusion. *laazim nibitt' fil-mawḍuuɛ da* we must make up our minds about the matter. *lagnit il-batt* the decision-making committee. *mamnuuɛ manɛ' baatt* strictly forbidden. - vn *batt*; ava *baatt*; pva *mabtuut.*
بتّه *batta'* instance noun of *batt.*
بتاتا *bataatan* **1** /adv, always w neg/ ever, at all, whatsoever. *ma-fii-ʃ ʕayy' ɛlaaɡa bataatan been il-ʕiʃtirakiyya wid-diin* there is no relationship whatsoever between socialism and religion. **2** /interj/ certainly not! not at all! *bi-tiddaayiɡ min wuguud-i fil-beet.* - *ʕabadan w-allaahi - bataatan* 'Are you annoyed at my being in the house?' 'Not at all! No no!'
اتبتّ *ʕitbatt* /vi/ (impersonal) passive of *batt. ʕil-mawḍuuɛ da tbatt' fii walla la* has that matter been settled or not? - iva *mitbatt.*
انبتّ *ʕinbatt* = *ʕitbatt.* - iva *minbatt.*

ب ت ت [2] see also ب ن ت [1]
بتّ *batt² (i) /vi/: batta tbitt-ak (w-aṣbaḥ sitt-ak)* indignant response by one addressed as *ya bitt* (q.v. under ب ن ت [1]).
بتّه *batta²: batta tbitt-ak* see *batt².*
بتّ *bitt'* see *bint.*

ب ت ت [3]
بتّ *bitt²: bitt il-widn [anat]* mastoid process. *ḍarab-hum ɛala bitt' wdan-hum* he boxed their ears.
بتّيّه *bittiyya* /n pl *bataati, bittiyyaat/* wooden tub.

ب ت ت ا و
بتّاو *bittaaw, battaaw* <perh Copt> /coll n/ type of bread made of Indian millet (*dura ɛweega*).
بتّاوة *bittaawa, battaawa* /unit n, pl *-aat/* a loaf of *bittaaw.*
بتّاوى *bittaawi, battaawi* = *bittaaw.*
بتّاويّه *bittawiyya, battawiyya* = *bittaawa.*

ب ت ت ك
بتتك *batatak: ħatatak batatak* rapaciously, feverishly, frantically. *nizil ɛala l-ɛeef ħatatak batatak* he gobbled up the bread ravenously. *nizlit ɛalee qarbª ħatatak batatak* she beat him frenziedly.

ب ت ج ا ز
بوتاجاز *butagaaz* <Fr *Butagaz*> /n/ **1** trade name under which bottled butane gas is marketed for commercial use. **2** /pl *-aat*/ cooking stove. *butagaaz bikkahraba* an electric cooker.

ب ت ر
بتر *batar, batarˀ (u)* /vt/ *[surg]* to amputate. - vn *batr, batr*; ava *baatir, baatir*; pva *mabtuur, mabtuur*.
اتبتر *ʕitbatar, ʕitbatar* /vi/ to be amputated. - iva *mitbitir*.

ب ت ر و ل
بترول *bitrool* <Fr *pétrole*> /n/ oil, petroleum.
بترولى *bitrooli* **1** /adj/ pertaining to petroleum. *mawaddˈ bitroliyya* petroleum products. **2** /adj invar/ smoky-grey in colour.

ب ت ر و ن
بترون *batroon* <Fr *patron*> /n pl *-aat, -aat*/ paper pattern (for a dress etc.).
بترونة *batroona* <It *padrona*> = *batroon*.

ب ت ر ى
باترى *batari* <Fr *batterie*> /n/ set of drums.

ب ت ر ى ش
بتريش *butriif* <It *pulitrice*> /n/ *[eng]* polishing machine, buffer.

ب ت ر ى ن
بترينة *batriina* <It *vetrina*> /n pl *batariin, batrinaat*/ **1** show-case. **2** shop-window. **3** glass-fronted set of shelves fixed to a wall by the road-side to display small items for sale. - also *vatriina*.

ب ت ش و - see ب ش : *bitfawiif*

ب ت ع ¹
باتع *baatiɛ* /adj */ **1** powerful, effective (especially of a saint). *sirr-u baatiɛ* his power is overwhelming. || *ʕil-batɛa* epithet of Sayyida Zaynab. **2** having the power to read minds, tell the future etc, (of a sorcerer or magician).

ب ت ع ² see ب ت ا ع : *bitaaɛ*

ب ت ف و ر ¹
بتيفور *bitifuur* <Fr> /coll n/ petits fours.
بتيفورة *bitifuura* /unit n, pl *-aat*/ a petit four.
بتيفوراية *bitifuraaya* /unit n, pl *-aat*/ = *bitifuura*.

ب ت ف و ر ²
بتفورة *batafuura* <perh It *buttafuori*> /n pl *-aat*/ davit.

ب ت ق
بوتقة *butqa* /n pl *bawaatiq*/ crucible, melting-pot. - also *budqa*.

ب ت ل
بتول *batuul* /masc and fem adj/ celibate, virgin. || *ʕilbatuul* the Virgin (Mary).
بتوليّة *batuliyya* /n/ *[Chr]* celibacy, virginity.
اتبتّل *ʕitbattil* /vi/ **1** *[Isl]* to be devout in worship. **2** *[Chr]* to devote oneself to a life of celibacy or virginity. - vn *tabattul*; ava *mutabattil*.

ب ت ل ت
بتلّة *batalitta* <Fr *pâtelette*> /n pl *-aat*/ flap or fly on clothing.

ب ت ل ل
بتللو *bitillu* <It *vitello*> /n/ veal. - /adjectivally/ *ʕil-laħm il-bitillu faħħ il-ʕayyaam di* veal has become scarce these days.

ب ت ل ى
بوتليا *butilya* <It *bottiglia*> /interj/ bottles! (rag-and-bone man's cry).

ب ت م see ب ت ن : *bitm, battaama, battim, ʕitbattim*

ب ت م ى ن
بتومين *bitumiin* <Engl> /n/ bitumen.

ب ت ن
بتن *bitn* (also *bitm*) <Copt> /n pl *butuun*/ *[agric]* ridge between furrows or patches of cultivation (see Pl.E, 20).
بتنيّة *bitniyya* = *bitn*.
بتّانة *battaana* (also *battaama*) /n pl *-aat, batatiin*/ *[agric]* implement for making ridges in the earth to mark off irrigation units (see Pl.D, 5).
بتّن *battin* (also *battim*) /vt/ to make ridges in (fields) to

mark off the units of irrigation. - vn *tabtiin*; ava/pva *mibattin*.
اتبتّن *ʔitbattin* (also *ʔitbattim*) /vi/ passive of *battin*. - iva *mitbattin*.

ب ت ن ا ج
باتيناج *batinaaj, patinaaj* <Fr *patinage*> /n/ **1** skating. **2** /pl *-aat*/ skating-rink.

ب ت ن ج – see ب د ن ج – : *bitingaan, bitingaana, bitingaani*

ب ت ن س –
بتونسليه *batunsaleeh* <Fr *batons salés*> /coll n/ long salted pastry stick(s).

ب ت ى ر
بتير *bitiir* <perh Fr *patère*> /n pl *bitaayir*/ *[elec]* block on which a ceiling-rose is mounted.

ب ت ى ك
بتيك *butiik* <Fr> /n pl *-aat, bawatiik*/ boutique.

ب ث ث see ب س س [2]

ب ث ر see ب س ر [1]

ب ث ق see ب س ق

ب ج ا م
بيجامة *bijaama, bigaama*↓ <perh It *pigiama*> /n pl *-aat*/ pair of pyjamas.

ب ج ح
بجح *bigiḥ* /adj */ impudent.
أبجح *ʔabgaḥ* /el/ more/most impudent.
بجاحة *bagaaḥa* /n/ impudence.
باجح *baagiḥ* [1] /adj */ impudent.
بجّح *baggaḥ* /vi/ to behave impudently or insolently. *ma-tbaggaḥ-ʃ*[i] *fiyya* do not be rude to me! - vn *tabgiiḥ*; ava *minaggaḥ*.
اتبجّح *ʔitbaggaḥ* /vi/ to behave impudently or insolently. - ava *mitbaggaḥ*.
باجح *baagiḥ* [2] /vi/ to behave impudently or insolently. *ʕaʕad yibaagiḥ maʕa ʔabuu* he went on answering his father back. - vn *mibagḥa*; ava *mibaagiḥ*.
اتباجح *ʔitbaagiḥ* /vi/ to behave impudently or insolently. - ava *mitbaagiḥ*.

ب ج د ى
بيجوديه *bigudya* <Fr *bigoudi*> /coll n/ hair-roller(s).

ب ج ع
بجع *bagaʕ* /coll n/ **1** swan(s). **2** *[rur]* pelican(s).
بجعة *bagʕa* /unit n, pl *-aat*/ **1** a swan. **2** *[rur]* a pelican.

ب ج ل
بجّل *baggil*↑ /vt/ to honour, venerate. - vn *tabgiil*; ava *mibaggil*; pva *mubaggal*.

ب ج م
بجم *bagam* /n invar/ oaf, dolt, blockhead.
بجّم *baggim* /vt/ **1** to dumbfound, make (s.o.) shut up. **2**↓ to put under anaesthetic. - vn *tabgiim*; ava/pva *mibaggim*.
اتبجّم *ʔitbaggim* /vi/ **1** to be dumbfounded, be made to shut up. **2**↓ to be put under anaesthetic. - iva *mitbaggim*.

ب ج و ر see ب ب و ر : *baguur*

ب ج ى ه
بوجيه *bujeeh* <Fr *bougie*> /n pl *-aat*/ **1** sparking-plug. **2** candle (unit of light intensity).

ب ح ب ح
بحبح *baḥbaḥ* **1** /vt/ to loosen, make loose. *baḥbaḥ-li l-fustaan* let the dress out for me. **2** /vi/ **2a** to let oneself go, act without restraint. *baḥbaḥi ʃwayya wi-dḥaki* relax and have fun! **2b** to spend money freely. - vn *baḥbaḥa*; ava/pva *mibaḥbaḥ*.
مبحبح *mibaḥbaḥ* /adj */ **1a** comfortably off, in easy circumstances. **1b** out-going, easy-going, generous-natured. **2a** ample, loose. *fustaan mibaḥbaḥ* a loose-fitting dress. **2b** ample, generous. *kiilu mbaḥbaḥ* a good kilo. *ʔig-gazzaar da wazn-u mbaḥbaḥ* that butcher is always generous when he weighs (the meat).
بحبوح *baḥbuuḥ* /adj/ easy-going, amiable.
اتبحبح *ʔitbaḥbaḥ* /vi/ **1** to be loosened. **2** to let oneself go, act without restraint. - ava/iva *mitbaḥbaḥ*.

ب ح ت
بحت *baḥt*↑ /adj/ pure, theoretical. *riyaaḍa baḥta* pure mathematics. - /adverbially/ *da ʈabʕan ʔigraaʔ maali baḥt* this of course is a purely financial procedure.

ب ح ث see ب ح س

ب ح ح [1]
بحّ *baḥḥ* [1] /coll n/ ducks.
بحّة *baḥḥa* [1] /unit n, pl *-aat*/ a duck.
بحّاية *baḥḥaaya* /n pl *-aat*/ a duck.

ب ح ح [2]

بحّ *baḥḥ* [2] *(i)* /vt/ to cause to become hoarse. *ʕana baḥḥeet ṣoot-i ɛaleek* I lost my voice calling you. - vn *baḥḥ, baḥaḥaan*; ava *baaḥiḥ*; pva *mabḥuuḥ*.

بحّة *baḥḥa* [2] /n/ **1** hoarseness. **2** voice timbre.

اتبحّ *ʔitbaḥḥ* /vi/ to become or be made hoarse. - ava/iva *mitbaḥḥ*.

ب ح ح [3]

بحّ *baḥḥ* [3] <Copt> /interj/ *[children]* gone! finished!

بحّه *baḥḥa* [3] = *baḥḥ*.

ب ح ر

بحر *baḥr* /n pl *buḥuur, biḥaar, ʕubḥur, buḥúraˈ*/ **1** sea. *ʔil-baḥr il-ʕabyaḍ (il-mutawassiṭ)* the Mediterranean Sea. *mayyit baḥr* salt water. *ʔirmii fil-baḥr' yiṭlaɛ wi-f-buqq-u samaka [prov]* throw him in the sea and he'll emerge with a fish in his mouth (said of one who is consistently lucky). *yiɛmil il-bahr' ṯiina [prov]* (he makes out that the sea is *ṯiḥiina*) ≈ he paints a rosy picture. *kalb il-baḥr* seal, sea-lion. *fiil il-bahr* elephant seal, walrus. ‖ *baḥr-u waasiɛ* it is endless or limitless, as in *ʔil-ɛilm' baḥr-u waasiɛ* knowledge is infinite. - *ʔil-baḥr' yḥibb iz-ziyaada [prov]* (the sea wants more) ≈ those who have are never satisfied. - *raagil baḥr* a very knowledgeable man. - *ʔifrab mil-baḥr* ≈ go to hell! - *ʔilli ṣabbar-ni ɛala ʃurb il-baḥr ...* ≈ after all I've been through (I can take whatever may come). - *ma-ḥadd'-ʃ ɛarif-lu barr' min baḥr* ≈ you can't pin him down. - *buḥuur-u ʁawiiṭa* he's a very deep person. **2** river, large canal. *ʔil-baḥr* or *baḥr in-niil* the River Nile. *yiwaddii-k il-baḥr' wi-ygiib-ak ɛaṭʃaan* (he takes you to the river and brings you back thirsty) he's deceptive. **3** span or period (of time). *fi-baḥr' talat siniin* within the space of three years. **4a** span (of a girder or beam). **4b** swallow, space between the sheave and the shell in a pulley-block. **5** /pl *buḥuur* only/ *[poet]* metre.

البحرين *ʔil-baḥreen* /prop n/ Bahrein.

بحرى *baḥari, baḥri* /adj/ **1a** pertaining to the sea. *ʕaɛʃaab baḥriyya* seaweed. *zuḥlifa baḥriyya* turtle. **1b** nautical. *ɛuqda baḥariyya* knot, one nautical mile per hour. **2** pertaining to a (large) river, especially the Nile. *baḥri ya samak [vendor's cry]* Nile fish! – /optionally invariable/ **3** northern. *balakoona baḥri* (or *baḥriyya*) a north-facing balcony. ‖ *ʔil-wagh il-baḥari* Lower Egypt. - *ɛaatiḥ beet-u ɛal-baḥri* ≈ he keeps open house (of one who behaves extravagantly in order to impress). – /prep/ **4** to the north of, at the north of. *ʕana saakin baḥari l-balad* I live on the north side of town. – /adv/ **5** north(ward). *ʕana msaafir baḥari* I'm travelling north.

بحراية *baḥraaya* /n pl *-aat*/ *[rur]* ground level section of a *ɢaaɛa* containing step(s) giving access to the raised floor(s).

بحراوى *baḥraawi* /pl *baḥarwa, baḥrawiyyiin*/ **1** /adj/ pertaining to Lower Egypt, pertaining to the Delta. **2** /n/ a Lower Egyptian. *ɛamaan kaanit bi-tiḥṣal xinaɢaat been iṣ-ṣaɛayda wil-baḥarwa* in the past there used (often) to be quarrels between the Upper and Lower Egyptians.

بحريّة *baḥriyya* /n/ navy. *ʔil-baḥriyya t-tugariyya* the Merchant Navy.

بحيرة *buḥeera* /n pl *-aat*/ lake.

البحيرة *ʔil-biḥeera* /prop n/ Beheira, a province in the western Nile Delta.

بحيرى *biḥeeri* /adj pl *baḥayra*/ pertaining to Beheira.

بحّار *baḥḥaar* /n pl *baḥḥaara, baḥḥariin*/ sailor.

بحّازى *baḥḥaari* /adj invar/ *[carp]* rabbeted. *waṣla baḥḥaari* a rabbeted joint.

بحّر *baḥḥar* /vi/ to travel northwards. - ava *mibaḥḥar*.

اتبحّر *ʔitbaḥḥar* /vi/ to become erudite, study extensively. - vn *tabaḥḥur*; ava *mitbaḥḥar*.

ب ح ث

بحث *baḥas (a)* **1** /vt/ to investigate, examine, study. *ḥa-nibḥas (f-)il-mawḍuuɛ da* we shall investigate this matter. **2** /vi/ to look, search. *bi-yibḥas ɛan ʕafkaar gidiida* he's looking for new ideas. - vn *baḥs*; ava *baaḥis*; pva *mabḥuus*.

بحث *baḥs* /n pl *buḥuus, ʕabḥaas*/ **1** research, study. *markaz il-buḥuus iz-ziraɛiyya* the Agricultural Research Centre. **2** report, study, paper.

باحث *baaḥis* [1] /n */ researcher, research worker. *baaḥis igtimaaɛi* social worker.

مبحث *mabḥas* [↑] /n pl *mabaaḥis*/ *[acad]* research topic, thesis. *mabḥas fil-manṭiq* a thesis in logic.

مباحث *mabaaḥis* /pl n/ police investigation department. *ʔil-mabaaḥis il-ɛamma* Central Criminal Investigation Department. *mabaaḥis ʕamn id-dawla* Bureau of Investigation for National Security. *mabaaḥis it-tamwiin* enforcement arm of the Ministry of Supply.

اتبحث *ʔitbaḥas* /vi/ to be investigated, be examined, be studied. - iva *mitbiḥis*.

باحث *baaḥis* [2] /vt/ to hold a discussion with (s.o.). - vn *mubaḥsa*; ava *mibaaḥis, mubaaḥis* [↑].

اتباحث *ʔitbaaḥis* /vi/ **1** to discuss together. **2** to be involved in discussion. - ava/iva *mitbaaḥis*.

ب ح ل ق
بحلق *baḥlaq* /vi/ to stare, be goggle-eyed. *waqfiin tibaḥlaqu leeh* why are you standing staring? *mif qaadir ʕanaam wi-ɛenay-ya mbaḥlaqa* I can't sleep and my eyes are wide open. ‖ *ʕakl[i] w-baḥlaqa* ≈ looking a gift-horse in the mouth. - vn *baḥlaqa*; ava *mibaḥlaq*.

ب خ ا ر
بخارا *buxaara* /prop n/ Bukhara.
البخارى *ʕil-buxaari* /prop n/ el-Bukhari, ninth-century compiler of a canonical assemblage of Prophetic traditions. ‖ *huwwa-ḫna ɣliṭna fil-buxaari* ≈ was it such a heinous mistake we made?

ب خ ب خ
بخبخ *baxbax* **1** /vt/ to sprinkle. **2** /vi/ to develop air-pockets (of cement or metals). - vn *baxbaxa*; ava *mibaxbax*.
اتبخبخ *ʕitbaxbax* /vi/ to be sprinkled. - iva *mitbaxbax*.

ب خ ت
بخت *baxt* /n pl *ʕabxaat, buxuut*/ **1** fortune, lot. *yimkin il-bint[i] di tkuun min baxt-i* perhaps it will be my lot to marry this girl. *ʕil-baxt[a] ɛand allaah* one's fortune depends on God. *ʕinta w-baxt-ak* it depends on your luck. *ʕil-baxt[i] kaan ʕiswid* it was rotten luck. **2** good luck, good fortune. *ya baxt-u* how lucky he is! *baxt-ak ya ʕabu bxiit* (1) try your luck. (2) lucky dip. *qaliil il-baxt[i] ylaaqi l-ɛaqm[i] fil-kirfa [prov]* an unlucky man will find bones (even) in tripe. *ɛiraaṭ baxt[i] wala faddaan ʃaṭaara [prov]* ≈ an ounce of good luck is better than a pound of cleverness. **3** /also pl *buxúta*/ surprise package.
بخيت *bixiit* /prop n/ male given name. ‖ *baxt-ak ya ʕabu bxiit* (1) try your luck! (2) lucky dip.
مبخت *mibxit* /adj */ possessed of a lucky touch.
مبخّت *mibaxxat* /adj */ = *mibxit*.

ب خ ت ر
اتبختر *ʕitbaxtar* /vi/ to strut, swagger. - also *ʕitmaxtar*. - ava *mitbaxtar*.

ب خ خ[1]
بخ *baxx (u)* /vt/ **1** to spray (s.th.) with a liquid. *ḫa-ngiib ḫadd[i] ybuxx if-faqqa ɛaʃaan nixlaṣ min iṣ-ṣaraṣiir* we'll get someone to spray the flat to get rid of the cockroaches. **2** to atomize, spray (a liquid). *baxxit mayya ɛala l-qamiiṣ qabl[i] ma yitkiwi* she sprayed the shirt with water before it was ironed. ‖ *ʕid-dinya baxxit baxxa waḥda w-baṭṭalit* there was just a quick shower and then the rain stopped. - vn *baxx, baxaxaan*; ava *baaxix*; pva *mabxuux*.
بخّة *baxxa* /pl *-aat*/ instance noun of *baxx*. ‖ *baxxit ɛafariit* a demon of a child.
بخّاخة *baxxaaxa* /n pl *-aat*/ any device whose purpose is to spray liquids (e.g., atomizer).
بخيخة *buxxeexa* /n pl *baxaxiix*/ = *baxxaaxa*.
اتبخّ *ʕitbaxx* /vi/ to be sprayed. - iva *mitbaxx*.
انبخّ *ʕinbaxx* = *ʕitbaxx*. - iva *minbaxx*.

ب خ خ[2]
بخ *bixx* <Copt> interjection used to startle someone ≈ boo!

ب خ ر[1]
بخار *buxaar* /n/ **1** steam, water vapour. *mumkin tiṭṭibix ɛal-buxaar* it can be cooked over steam. ‖ *ḫallit buxaar* pressure cooker. **2** /pl *ʕabxira*/ vapour. *ɣazaat wi-ʕabxira saamma* poisonous gases and vapours.
بخارى *buxaari* /adj/ steam-driven. *ʕalaat buxariyya* steam-driven equipment.
بخور *buxuur* /n/ incense. *rafɛ[i] buxuur [Chr]* raising of incense, offering of incense.
أبخر *ʕabxar* /adj, fem *baxra*, pl *buxr*/ exhaling malodorous breath. *ʕiḫtarṭ[i] ya baxra ʕabuus-ik mineen [prov]* (I don't know where to kiss you because of the smell of your mouth) I am at a loss to know how to please you.
مبخرة *mabxara* /n pl *mabaaxir*/ **1** fumigator. **2** censer, thurible.
باخرة *baxra, baaxira* /n pl *bawaaxir*/ steamer, steamship.
بخّر *baxxar* /vt/ **1** to evaporate. **2** to fumigate. **3** to cense. — /vi/ **4** to engage in flattery. *ʕit-tabxiir lil-mudiir* flattering the director. **5** to respire (of plants). - vn *tabxiir*; ava/pva *mibaxxar*.
تبخيرة *tabxiira* /n/ **1** /pl *-aat*/ instance noun of *tabxiir*. **2** /no pl/ branch of folk medicine involving the use of incense.
مبخّراتى *mibaxxaraati* /n pl *-yya*/ **1** one who censes or fumigates shops and streets. **2** flatterer.
اتبخّر *ʕitbaxxar* /vi/ **1** to evaporate or be evaporated. **2** to be fumigated. **3** to be censed. **4** to be or become diffused or dispersed. - vn *tabaxxur*↑; ava/iva *mitbaxxar*.

ب خ ر[2] see ب خ ا ر: *buxaara, ʕil-buxaari*

ب خ س
بخس *baxas (i)* /vt/ to cause a setback to. *rabb-i-na*

baxas-u God upset his plans. - vn *baxasaan, baxsa*; ava *baaxis*; pva *mabxuus*.

بخس *baxs* /adj invar/ very low (of prices).

اتبخس *ʔitbaxas* /vi/ **1** to be caused a setback. **2** to be under-priced or under-valued. - iva *mitbixis*.

ب خ ش ش

مبخشش *mibaxʃiʃ* /adj/ perforated. *bi-titɛimil in-namaazig di b-waraq marsuum wi-mbaxʃiʃ* these designs are made with paper, drawn upon and perforated (for transference to cloth used in tent making).

ب خ ش و ن

بخشونجی *baxʃawangi* <T *bahçıvan*> *[obsol]* /n pl *-yya*/ gardener.

ب خ ل

بخل *bixil (a)* /vi/ to stint, become stingy or miserly. *ma-tibxal-f' ɛaleena b-ziyart-ak* ≈ visit us more often! - vn *buxl*.

بخيل *baxiil* /adj pl *buxala*/ miserly.

أبخل *ʔabxal* /el/ more/most miserly.

استبخل *ʔistabxal* /vt/ to consider miserly. - vn *ʔistibxaal*; ava/pva *mistabxal*.

ب خ ن ق

بخنق *buxnuq* /n pl *baxaaniq*/ throat latch (of a bridle).

ب د ء see ب د ى [1]: *badaʔ, badʔ, bidaaʔi, mabdaʔ, ʔibtadaʔ, ʔibtidaaʔi, mubtadiʔ*

ب د ح see ب د و ح: *baduuh*

ب د د [1]

بدّ *budd: la budd* it is absolutely necessary, as in *kaan la budd (min) inn' kull-u-hum yiruuhu* all of them simply had to go. *la budd' min tahdiid il-masʔuliyya* it must be determined who is responsible (for what went wrong), *ʔilli minnu la budd ɛannu [prov]* ≈ what must be must be. *miʃ wala budd* not so good, only so-so, as in *zooq-u miʃ wala budd* his taste is so-so. *ma-fii-ʃ ɛannu* (or *minnu) budd* it is a must.

أبدّ *ʔabadd* /adj invar/ callous, insensitive.

بدّد *baddid* /vt/ to waste, squander, fritter away. *bi-ybaddid ḥayaat-u* he's wasting his life. - vn *tabdiid*; ava/pva *mibaddid*.

تبديد *tabdiid* /n/ *[leg]* violation of trust.

اتبدّد *ʔitbaddid* /vi/ to be wasted, be squandered, be frittered away. - iva *mitbaddid*.

استبدّ *ʔistabadd* /vi/ to act tyrannically. *bi-tistabidd' bin-naas kida leeh* why do you treat people so arbitrarily? - vn *ʔistibdaad*; ava *mustabidd*.

استبدادى *ʔistibdaadi* /adj */ dictatorial.

ب د د [2] see و د د: *bidd-*

ب د ر [1]

بدر *badr* /n pl *buduur*/ **1** full moon. ‖*ka-ʔinnina ya badr' la ruḥna wala giina* ≈ as if we had done nothing, for all the effect our effort had. **2** /pl also *budúra*/ epithet for a good-looking youth or girl. ‖*badr' bduur* ≈ a ravishing girl

ب د ر [2]

بدر *badar' (u)* /vi/ to come unexpectedly, come by surprise. *huwwa - la samaḥ allaah - badar minni kilma zaɛɛalit-u* I inadvertently said something that upset him.

بدرى *badri* /adv/ early. *lissa badri ɛala gawaz-ha* it's still too soon for her to get married. ‖*zarɛ' badri [deris]* well-built person.

¶ *min badri* /adv/ (1) some time ago. *xarag min badri* he left a good while ago. (2) for a considerable time. *ʔana mistannii-k min badri* I've been waiting for you for quite a while. (3) a considerable time in advance. *bi-yxaṭṭaṭ lil-maʃruuɛ min badri* he makes plans for the project well in advance.

بدريّة *badriyya* /n pl *badaara*/ **1** pullet. **2** /pl also *-aat*/ young ewe. — /no pl/ **3** early morning. *ʔil-badriyya saaɛa haniyya* the small hours of the morning is a lovely time.

بدارى *badaari: zarɛ il-badaari* the earliest planting of any crop.

أبدر *ʔabdar* /el/ earlier/earliest. *laazim tiigi ʔabdar min kida* you must come earlier than that.

بدّر *baddar'* **1** /vi/ to make an early start. *xallii-na nbaddar fiʃ-ʃuɣl* let's start early with the work. **2** /vt/ to appoint an earlier time for (s.o.). *huwwa ɛaayiz yibaddar-ni fil-maɛaad* he wants to give me an earlier appointment. - vn *tabdiir*; ava/pva *mibaddar*.

بادر *baadir* **1** /vt/ to be ahead of (s.o., in doing s.th.). *kunna zaɛlaniin maɛa baɛḍ' laakin lamma ʃuft-u huwwa lli badir-ni b-taḥiyya* we were angry with one another, but when we met he was the first to get in a greeting. **2** /vi/ to hasten. *baadir bi-tasliim il-mablaɣ* he hastened to hand over the amount. - vn *mubadra*; ava *mubaadir*.

مبادرة *mubadra* /n pl *-aat*/ *[pol]* initiative.

استبدر ʔistabdar /vt/ **1** to ask or cause to be earlier. *ruuḥ istabdar-hum* go and hurry them up! **2** to consider (too) early. — /vi/ **3** to make an early start. -vn *ʔistibdaar*; ava/pva *mistabdar*.

ب د ر [3]

بذر، بَدر *badar*[2] *(u)* /vt/ to scatter, broadcast, strew. *bi-nubdur il-kimaawi fil-ʔarḍ* we spread the chemical fertilizer over the ground. *baʕdi ball-a-ha b-nubdur it-taqaawi* after it (i.e. the land) has been moistened we broadcast the seed. -vn *badr, bidaar*; ava *baadir, baadir*; pva *mabduur, mabduur*.

بذر *bizr* /coll n/ seed(s), pip(s), stone(s). *ʕinab min ɣeer bizr* seedless grapes. ‖*ɣurzit il-bizr [needlew]* type of knot-stitch.

بذرة *bizra* /n pl *-aat*/ **1** /unit/ a seed, a pip, a stone. *bizrit miʃmiʃ* an apricot stone. *bizrit xarruub* a carob seed. **2** /coll/ seed(s), pip(s), stone(s). *quṭn[i] xaali min il-bizra* cotton with its seeds removed.

بذراية *bizraaya* = *bizra*.

بذور *buzuur*↑ /pl n/ seed(s).

بديرى *bideeri*[1] /adj invar/ mottled whitish-red colour (of pigeons).

بذّارة، بذارة *baddaara*[1] /n pl *-aat*/ device used for sowing.

بذّارى *baddaari, baddaari* /n/ method of planting rice by which the mature crop is cultivated directly from seed without an intervening stage of transplant.

اتبذر، اتبدر ʔitbadar /vi/ to be scattered, be broadcast. -iva *mitbidir*.

ب د ر [4]

بودرة *budra* <Fr *poudre*> /n pl *-aat*/ powder. *budrit talk* talcum powder. *budrit liḥaam* welding flux. *budrit ḥaʃiiʃ* powdered hashish. *sukkar budra* icing sugar. ‖*budrit il-ʕafriit* (1) itching powder. (2) tree of the genus Sterculia, the fruit of which contains hairs causing itching.

بذّارة *baddaara*[2] /n pl *-aat*/ powder dispenser.

بدّر *baddar*[2] /vt/ to powder, dust with powder. -vn *tabdiir*; ava *mibaddar*.

اتبدّر ʔitbaddar /vi/ to be powdered, be dusted with powder. -iva *mitbaddar*.

ب د ر ا ن

بدران *badraan: giziirit badraan* area in north Cairo.

ب د ر ج

بدرجه *badarga: ḥadarga badarga* the opening phrase of a children's counting game.

ب د ر و م see ب د ر و ن : *badroom*

ب د ر و ن

بدرون *badroon* (also *badroom*) <T *bodrum*> /n pl *-aat*/ basement, cellar.

ب د ع

بدع *badaʕ (a)* /vt/ to create, originate, invent. *ʔil-ḥamaam huwwa-lli badaʕ il-ḥubb* it's pigeons that invented love. -vn *badʕ*; ava *baadiʕ*.

بدع *bidʕ* /n/ *[women]* sauciness, brashness.

بدعة *bidʕa* /n pl *bidaʕ*/ **1a** innovation. **1b** creation (in art, fashion etc.). **2a** impropriety, scandalous behaviour. **2b** eccentricity, unconventional behaviour. **3** heresy.

بديع *badiiʕ* **1** /adj/ marvellous, wonderful. *fikra badiiʕa* a brilliant idea. **2**↑ /n/ *(ʕilm) il-badiiʕ* literary ornamentation (one of the three branches of the study of Arabic rhetoric). **3** *ʔil-badiiʕ* Supreme Creator (epithet of God).

بديعة *badiiʕa* /prop n/ female given name. ‖*samak badiiʕa* angel fish. -*kubri badiiʕa [obsol]* bridge over the Nile at Cairo (later called *kubri l-galaaʔ*) joining the west bank and the southern end of Guezira Island, named after the dancer, Badi'a Masabni.

أبدع *ʔabdaʕ*[1] /el/ more/most wonderful.

ابتدع ʔitbadaʕ /vi/ to be created, be originated, be invented. *ʔil-ḥubb itbadaʕ fi-balad-na* love was invented in our country. -iva *mitbidiʕ*.

بدّع *baddaʕ* /vi/ to do wonders, perform marvels. *ʔiz-zamaalik baddaʕ bi-ṣaḥiiḥ in-nahar-da* Zamalik (football team) was really great today. -ava *mibaddaʕ*.

أبدع *ʔabdaʕ*[2] /vi/ to excel, give a wonderful performance. *ʔinta ʔabdaʕt[i] fil-matʃ* you played a great match. -vn *ʔibdaaʕ*; ava *mubdiʕ*.

إبداع *ʔibdaaʕ* /n/ excellence.

ابتدع ʔibtadaʕ /vt/ to invent. -vn *ʔibtidaaʕ*; ava *mibtidiʕ*.

ب د ق

بودقة *budqa* /n pl *bawaadiq*/ crucible, melting-pot. - also *butqa*.

ب د ك ى ر

بدكير *badikiir* or *bidikiir* <Fr> /n/ pedicure.

ب د ل [1]

بدل *badal*[1] *(i)* /vt/ to substitute. *xallaa-ni miʃ baaṣiṣ wi-badal il-ɣiweeʃa* he distracted my attention and

switched the bracelet. - vn *badal*; ava *baadil*; pva *mabduul*.

بدل *badal*[2] /n pl *-aat*/ **1** substitute, replacement. *laazim tistanna l-badal qabl' ma-tquum bil-ʕagaaza* you must wait for the substitute (worker) before you go on holiday. *badal faaqid* replacement for something lost. **2** exchange, swop. *kull' waaḥid bi-yiftiri ktaab wi-baʕd' fahr' yiʕmilu badal* each of them buys a book and after a month they arrange a swop. **3** allowance. *badal tamsiil* expense account. *badal sahar* extra payment for night work. *badal ṭabiiʕit ʕamal* hardship allowance.

بدل *badal*[3] (also *bidaal*) /prep/ instead of. *bi-yibʕat wakiil maktab-u badalu* he sends his office agent in his place.

¶ *badal ma, bidaal ma* /conj/ instead of. *badal ma yinbisiṭ baqa middaayiq xaaliṣ* instead of being pleased he became extremely irritated.

بدليّة *badaliyya* /n pl *-aat/ [obsol]* money paid for exemption from military service, purchase money.

مبدول *mabduul* /n */ child believed to have been substituted by the jinn for another, changeling. ‖ *ʔil-wad-da zayy il-mabduul* that boy is very irritable.

بدال *bidaal* **1** /conj/ since, as long as. *bidaal ʔinta mfiit fis-sikka l-wiḥʃa di yibqa mif ḥa-tinfaʕ* since you've taken to living a bad life, you won't be good for anything. **2** /prep/ = *badal*[3].

بديل *badiil* /pl *badaayil*/ **1** /n/ substitute, alternative. **2** /adj/ substitute, alternative.

بدّالة *baddaala* /n pl *-aat/ [agric]* **1** Archimedes' screw (see Pl. E, 15). **2** irrigation device consisting of a wooden box which is tipped back and forth.

اتبدل *ʔitbadal* /vi/ **1** to be substituted. **2a** to be possessed by a jinni. **2b** to become annoyed or upset. *saaʕit ma ʃaaf il-fatuura tbadal wala baqaa-ʃ ḥadd' ʕaarif yikallim-u* as soon as he saw the bill he became very cross and nobody could speak to him. - ava/iva *mitbidil*

انبدل *ʔinbadal* = *ʔitbadal*. - ava/iva *minbidil*.

بدّل *baddil*[1] /vt/ to change, change around. *ʕayz-ak tibaddil il-ʕagala* I want you to change the wheel. *ʔil-waad bi-ybaddil (sinaan-u)* the boy is losing his milk teeth. *baddil id-dustuur* he changed the constitution. - vn *tabdiil*; ava/pva *mibaddil*.

اتبدّل *ʔitbaddil* /vi/ **1** to change, become different. *min yoom ma rigiʕ wi-ḥaal-u tbaddil* he's been different ever since he got back. **2** to be replaced (by a substitute). *ʔif-fanṭa laazim itbaddilit fil-qaṭr* the case must have been changed for another in the train. *ʔil-ḥukm' bil-ʔiʕdaam itbaddil bil-muʔabbad* the death sentence was commuted to life imprisonment. - ava/iva *mitbaddil*.

بادل *baadil* /vt/ to exchange with (s.o.). *tibadil-ni* do you want to swop with me? *bi-titʕimil bil-muqayḍa ʃaw bil-mubadla* it is done by means of bartering or exchange. - vn *mibadla, mubadla*↑; ava/pva *mibaadil*.

اتبادل *ʔitbaadil* /vt/ to exchange with one another. *baʕd il-ʕaʃa b-yitbadlu n-nukat il-laṭiifa* after supper they exchange amusing jokes. - vn *tabaadul*; ava *mitbaadil*.

استبدل *ʔistabdil* /vt/ **1** to make a substitute for. *ḥ-astabdil-lak ḥaqq-ak bi-hdiyya* instead of paying you what I owe I'll give you a present. **2** to take out (a loan) with one's pension as security. *ʔistabdil xamsa gneeh min il-maʕaaf ʕala ʕaʃar siniin* he got an advance against five pounds of his pension to be paid back over ten years. - vn *ʔistibdaal*; ava/pva *mistabdil*.

استبدال *ʔistibdaal* /n pl *-aat/* loan made to an employee or pensioner with his pension as security.

ب د ل [2]

بدّال *baddaal* <Fr *pédale*> /n pl *-aat/* pedal. *ma-tdus-ʃ' ʕal-baddaal* don't step on the pedal! *markib baddaal* paddle-boat, paddle-ship.

بدّل *baddil*[2] /vi/ to pedal. *b-abaddil bi-rigl' waḥda* I pedal with one leg. - vn *tabdiil*; ava *mibaddil*.

ب د ل [3]

بدلة، بذلة *badla* /n pl *bidal, -aat/* **1** (man's) suit, (woman's) trouser-suit. *badlit ɣaṭs* diving-suit. **2** uniform. *badla ʕaskariyya* military uniform. **3** belly-dancer's costume.

ب د ل ى

بدليو *bidalyu* <It *bardiglio*> /n/ type of grey marble

ب د ن

بدن *badan* /n pl *ʔabdaan/* **1** body, torso (of a human). *ṣiḥḥit il-ʔabdaan wala ṣiḥḥit il-ʔadyaan [prov]* (health of bodies rather than health of religions) ≈ a sound body produces a sound mind. - /pl used for emphasis/ *haru ʔabdaan-i* they gave me a thorough beating. ‖ *ṣaḥḥ allaahu badan-ak* conventional reply to *ṣaḥḥ in-noom*. - *baab il-badan* anus. - *tisimmi badan-ha bil-kilmiteen dool* ≈ you make her feel hurt by those words. **2** basic part onto which other parts are built, e.g., body of a wind instrument, tank of a primus stove, hull or prow of a boat, front and back sections of a galabiya or dress. **3** uterus.

بدنى *badani* /adj */ bodily, physical. *riyaaḍa badaniyya* physical training.

ب د ن ج -
باذنجان *bidingaan* (also *bitingaan, biringaan*↓) <P *bâdinjân*> /coll n/ eggplant(s), aubergine(s). ‖ *ʕaadi zamaan il-bidingaan* it's the silly season, it's the season for madness.
باذنجانة *bidingaana* (also *bitingaana)* /unit n, pl *-aat*/ an egg-plant, an aubergine.
باذنجانى *bidingaani* (also *bitingaani*) /adj invar/ dark purple.

ب د ه
بديهة *badiiha* /n/ insight, perspicacity. *badiht-u ħaḍra*, he is quick-witted. ‖*ɛala l-badiiha* spontaneously.

ب د و ¹
بدوى *badawi* **1** /n pl *badw*/ bedouin, nomad. **2** /adj */ pertaining to the bedouin.
البدوى *ʔil-badawi* /prop n/ Sidi Ahmad el-Badawi (popularly known as es-Sayyid el-Badawi), famous Muslim saint buried in Tanta.

ب د و ² see ب د ى ²

ب د و ح
بدوح *baduuḥ [magic, obsol]* abecedarian compound word, sometimes represented by its value number 2468, and used as a lucky charm.

ب د ى ¹
بدا، بدأ *bada¹, badaʔ¹↑ (a)* /vi/ **1** to make a start, begin. *bi-tibdaʔ bi-ħarf il-ʔalif* it begins with the letter *ʔalif*. **2** /preverb/ to begin to. *ʔil-mumassiliin badu yizharu ɛal-masraḥ* the actors began to appear on the stage. - vn *badʔ, bidaaya*; ava *baadi, baadiʔ↑*.
بدا، بدأ *bada² (i), badaʔ²↑ (a)* /vt/ to begin or start (s.th.). *ħa-yibdi l-ħafla b-ʔuɣniyya* he'll begin the performance with a song. *ʔawwil ma nibdi l-ɋool niṣalli ɛala n-nabi* when we begin the tale we bless the Prophet (opening phrase of popular stories). - vn *badʔ↑, bady*; ava *baadi, baadiʔ↑*; pva *mabdi, mabduuʔ↑*.
بدء *badʔ* /n/ *[athl]* start. *badʔᵃ ɛaali* standing start.
بدية *badya* /fem n, pl *-aat, biday*/ **1** casting-on point (in knitting etc.). *law faddeet fatlit il-badya ħa-yitħall¹ kull-u* if you pull the cast-on stitch undone, it will all unravel. **2** frame, skeleton, foundation.
بداية *bidaaya* /n/ beginning, start. *min il-bidaaya* from the beginning. *xaṭṭ il-bidaaya [athl]* starting line.
بدائى *bidaaʔi, budaaʔi* /adj */ primitive. *fann¹ bdaaʔi* primitive art. *xallaṣu ɛaleehum bi-ṭariiɋa budaʔiyya* they finished them off in a savage manner.

أبدأ *ʔabda¹* /el/ having priority, taking precedence. *huwwa ʔabda min gooz-ik* he takes precedence over your husband.
مبدأ *mabdaʔ* /n pl *mabaadiʔ*/ **1** principle, conviction. *min ħees il-mabdaʔ* on principle. *raagil ma-ɛanduu-ʃ mabdaʔ* an unprincipled man. **2** beginning, starting point. *min mabdaʔ il-ʔamr* right from the start, as in *ʔana ɋult¹ min mabdaʔ il-ʔamr¹ laazim nidfaɛ illi ɛaleena* I said from the very beginning that we should pay what we owe.
¶ *mabdaʔiyyan* /adv/ (1) in principle. (2) originally, in the first place.
مبادأة *mubadʔa* /n pl *-aat*/ initiative, initiatory action.
ابتدى، اتبدأ *ʔitbada, ʔitbadaʔ* /vi/ to be started, be begun. -iva *mitbidi*.
بدّى *badda* /vt/ to give priority to. *ɛumr-u ma-badda ʔaṣḥaab-u ɛala ɋarayb-u* he never puts his friends before his relatives. - vn *tabdiyya*; ava/pva *mibaddi*.
اتبدّى *ʔitbadda* /vi/ to be given priority. - iva *mitbaddi*.
ابتدا *ʔibtada* **1** /vt/ to begin, start, *bi-nibtidi l-ɛamal bi-ṭariiɋa di* we begin the work this way. — /vi/ **2** to make a start, begin. *ʔil-imtiḥanaat ibtadit ʔimbaariḥ* the examinations began yesterday. **3** /preverb/ to begin to. *ʔif-fams ibtadit tisayyaḥ il-ʔasfalt* the sun began to melt the asphalt. - vn *ʔibtidaaʔ↑*; ava *mibtidi, mubtadi↑, mubtadiʔ↑*.
ابتدائى *ʔibtidaaʔi* /adj */ **1** initial, primary. *madrasa btidaʔiyya* a primary school. *maḥaakim ibtidaʔiyya* courts of first instance. *surɛa btidaʔiyya [auto]* low gear. **2** pertaining to primary school. *ʔana f-ʔuula btidaaʔi* or *ʔana fiṣ-ṣaff il-ʔawwil l-ibtidaaʔi* I am in the first grade of primary school.
الابتدائيّه *ʔil-ʔibtidaʔiyya* /n/ the primary school certificate. *huwwa fil-ibtidaʔiyya* he's working for his primary school certificate.
مبتدى، مبتدئ *mubtadi, mubtadiʔ* /n */ **1** beginner. **2** *[Chr]* novice.
استبدى *ʔistabda↓* /vi/ to make a start, begin. *ʔistabdi bil-ɋumṣaan wi-xalli f-ʃarabaat lil-ʔaaxir* start with the shirts and leave the socks till last. - ava *mistabdi*.

ب د ى ²
بدا *bada³↑ (yabdu)* /vi/ **1** it seems, it appears. *yabdu ʔinnu maʃɣuul* it seems he's busy. **2** to appear. *bada ɛalee ʔit-taɛab* the tiredness showed on him, he looked tired. ‖ *ʔiɛmil ma badaa-lak* do whatever you like.
أبدى *ʔabda²↑* /vt/ to show. *ʔabda ʔixlaaṣ-u* he showed his sincerity. *ʔabdeet raʔy-i* I expressed my opinion. *bi-duun ʔibdaaʔ il-ʔasbaab* without explaining the reasons. - vn *ʔibdaaʔ*; ava *mibdi, mubdi*.

ب د ى ه
بديه *bideeh* <Fr> /n pl *-aat*/ bidet.

ب ذ ر see ب د ر 3

ب ذ ل 1 see ب د ل 3

ب ذ ل 2 see ب ز ل 2

ب ذ ن ج - see ب د ن ج -

ب ر ا ف
برافو *biraafu, biraavu*↑ (also *baraawu*) <It> /interj/ bravo. *biraafu ɛaleek* well done! good for you!

ب ر ا ن see ب و ر 1: *buraani*

ب ر ا و see ب ر ا ف: *baraawu*

ب ر ء 1
برا *bara'* *(i)* /vt/ to exonerate, grant immunity to. *ɋal-laha brii-ni w-ʕana ʕaṭallaɋ-ik* he said to her, 'If you absolve me (from the sinfulness of it) I'll give you a divorce'. ‖ *bareet zimmit-i min allaah* I did what was right in the eyes of God. - pva *mabri*.
برى *bari*↓ /adj pl *ʕabriya, ʕabriyya*/ innocent. *ya baxt il-maẓluum wi-huwwa bari [prov]* lucky the man who is wrongly accused (because he will be compensated for his sufferings in the next life) (said by one who claims he is falsely accused).
براءة *baraaʕa* /n/ *[leg]* innocence. *ḥakamit il-maḥkama b-baraaʕit il-muttaham* the court declared the defendant not guilty.
برىء *bariiʕ* /adj pl *ʕabriyaaʕ*/ innocent, acquitted. *fil-ʕaaxir ṭiliɛ bariiʕ* he turned out to be innocent after all. ‖ *ʕana bariiʕ minnak* I've washed my hands of you completely. - *ʕakuun bariiʕ ɛan diin il-ʕislaam* I would be outside Islam, i.e. no longer a Muslim, (if ...).
إبراء *ʕibraaʕ: sanat il-ʕibraaʕ* Sabbatical year (in Judaism).
برّأ *barraʕ* /vt/ to acquit, declare innocent. *ʕil-maḥkama barraʕit-u ɛaʃaan ma-fii-ʃ ʕadilla kfaaya* the court acquitted him because of lack of sufficient evidence. - vn *tabriʕa*↑; ava/pva *mibarraʕ*.
اتبرّأ *ʕitbarraʕ* /vi/ to be found not guilty. - iva *mitbarraʕ*.
اتبرّى *ʕitbarra, ʕitbarra* /vi/ to disown responsibility. *ʕabuu-ha tbarra minha* her father washed his hands of her. - ava *mitbarri*.
استبرى *ʕistabra, ʕistabra: bareet-ak wi-stabreet-ak [women]* I absolve you completely.
استبرّا *ʕistibarra*↓ /vt/ intensive of *ʕitbarra*. ‖ *ʕana stibarreet mil-ɛiyaal di* I've had as much as I can stand from these kids! - ava *mistibarri*.

ب ر ء 2
بارى *baari* /n/ Creator (epithet of God).
البريّة *ʕil-bariyya* /n/ Creation, the created universe.

ب ر ب
بربة *birba* <Copt> /n pl *baraabi, ʕibriba*/ **1** ancient or ruined temple. **2**↓ tomb.

ب ر ب خ
بربخ *barbax, barbax* /n pl *baraabix, baraabix*/ culvert, any of various types of large metal or earthenware pipes (used, e.g., for drains, sewers, irrigation).

ب ر ب ر 1
بربرى *barbari* /n pl *barabra*/ **1** *[deris, obsol]* black African (not used in direct address). **2** hot-tempered person. ‖ *barabra ya rasuul allaah* expression of apology to a third party for someone with a hot temper. – /no pl/ **3** gibberish. *bi-yitkallim barbari* he's talking double-Dutch.

ب ر ب ر 2
بربور *barbuur* /n pl *barabiir*/ nasal mucus, snot.
بربر *barbar* /vi/ **1** to have a running nose. **2** to snivel. - vn *barbara*; ava *mibarbar*.
مبربر *mibarbar* /adj/ snotty-nosed, snot-covered.

ب ر ب ر 3
بربر *birbir* <Copt> /adj invar/ young (of a chicken). ‖ *ʕinta lissa birbir* ≈ you're still wet behind the ears.
بربرة *birbira* /n pl *baraabir*/ pullet. ‖ *diik il-baraabir* the only brother of a number of sisters.

ب ر ب ر -
بربريز *barabriiz* <Fr *pare-brise*> /n pl *-aat*/ **1** windscreen, wind-shield (of a car etc.). **2** back window (of a car etc.).

ب ر ب ش
بربش *barbiʃ* /vt/ **1** to blink (the eyelids) constantly (as a nervous habit). **2** to narrow (the eyes). *bi-ynaam wi-ɛenee mbarbiʃa* he sleeps with his eyelids slightly open. - vn *barbaʃa*; ava *mibarbiʃ*.

ب ر ب ق
بربق *barbaq* **1** /vt/ to plaster (a wall), plaster over (holes in a wall). **2** /vi/ **2a** to stare, open the eyes wide. **2b** to gleam, twinkle (of the eyes). -vn *barbaqa*; ava/pva *mibarbaq*.
اتبربق *ʔitbarbaq* /vi/ to be plastered, be plastered over. -iva *mitbarbaq*.

ب ر ب ن د
برابند *baraband* <poss P *bârbad*> /n pl *-aat*/ one who speaks very fast and fluently, chatter-box. *huwwa baraband[i] fil-ʔingiliizi* or *bi-yitkallim ʔingiliizi zayy il-baraband* he speaks English fluently.

ب ر ب و ن
بربوني *barbooni* /coll n/ red mullet (Mullus barbatus, and other similar varieties).
بربونايا *barbonaaya* /unit n, pl *-aat*/ a red mullet.

ب ر ت ت -
برتتورة *bartituura* <It *partitura*> /n pl *-aat*/ *[mus]* score.

ب ر تِ ر ي
برتريه *burtreeh* <Fr> /n pl *-aat*/ portrait.

ب ر ت س
برتستو *burutustu* <It *protesto*> /n pl *burutustaat*/ *[comm, obsol]* protest.
برتس *bartas* /vi/ *[comm, obsol]* to serve or execute a protest. -vn *bartasa*; ava *mibartas*.

ب ر ت س -
بروتستانتي *burutistanti* <Engl> /adj pl *burutistant*/ *[Chr]* Protestant. -also *burustanti*.

ب ر ت غ -
برتغال *burtuɣaal* /prop n/ Portugal.
برتغالي *burtuɣaali* **1** /adj */ Portuguese. **2** /n */ a Portuguese. **3** /n, no pl/ the Portuguese language.

ب ر ت ق -
برتقان *burtuqaan, burtuqaan* /coll n/ oranges. *burtuqaan ʔabu surra* navel oranges. *burtuqaan baladi* small sharp variety of orange. *burtuqaan sukkari* sweet, bland variety of orange. *burtuqaan ṣeefi* variety of orange that is harvested (unlike other varieties) in the summer. *burtuqaan bi-damm-u* blood orange. ‖*burtuqaan bamya* carambola.
برتقانة *burtuqaana, burtuqaana* /unit n, pl *-aat, -aat*/ an orange.
برتقاني *burtuqaani, burtuqaani* /adj invar/ orange in colour.

ب ر ت ك -
بروتوكول *burutukuul* <Fr> /n pl *-aat*/ **1** protocol. **2** regulations, rules (of a school, club, place of business).

ب ر ت و ن
برتون *biritoon* <prob Fr *péritoine*> /n/ *[anat]* peritoneum. *ʔiltihaab fil-biritoon* peritonitis.

ب ر ت ي
بارتيه *barteeh* <Fr *partez*> /interj/ *[cin]* action!

ب ر ت ي ت
برتيتة *bartiita* <It *partita*> /n/ **1** gambling party. **2** illicit gathering.

ب ر ت ي ن
بروتين *burutiin* <Engl> /n pl *-aat*/ protein.

ب ر ت ي -
برتيفود *baratayfuud* <prob Engl> /n/ paratyphoid.

ب ر ج [1]
برج *burg* /n pl *ʔabraag, buruug, biraag*/ **1** tower. *burg[i] ḥamaam* dove-cote, pigeon-house (see Pl.C, 3). *burg il-qaahira* Cairo Tower, on Guezira Island. *burg il-ḥafr* oil rig. *ɛaayif fi-burg[i] ɛaagi* living in an ivory tower. ‖*burg[i] min ɛaql-u ṭaar* he lost his head. *-ḥa-ṭṭayyar burg[i]* (or *burgeen*) *min ɛaql-i* you'll drive me out of my mind. **2** *[astrol]* zodiacal sign.
برّج *barrag* /vt/ to pile up. *bi-nbarrag-hum fooq baɛḍ[i] waaḥid waaḥid* we stack them up on top of each other one by one. -vn *tabriig*; ava/pva *mibarrag*.
اتبرّج *ʔitbarrag* /vi/ to be piled up. -iva *mitbarrag*.

ب ر ج [2]
بارجة *baariga[t]* /n pl *bawaarig*/ battleship.

ب ر ج [3] see ب و ر ى [2] : *buruugi*

ب ر ج ر -
بروجرام *burugraam* <prob Fr> /n pl *-aat*/ programme, plan. *ʔeeh burugraam-ak in-nahar-da* what are your arrangements for today?

ب ر ج س

برجاس *birgaas* <P *burjâs*> /n/ *[obsol]* equestrian sport or entertainment (e.g., horse-dancing, mounted stick-fighting etc.).

برجس *bargis* /vi/ **1** *[obsol]* to engage in equestrian sports. || *ʕaɛma wi-ybargis fin-naxl [prov]* (blind yet he gallops about amid the palms) ≈ he seeks to do what is far beyond his capacity. **2** to run about in a clumsy or dangerous way, barge about. -vn *bargasa*; ava *mibargis*.

ب ر ج ل [1]

برجل *bargil* /vt/ to confuse, put into disarray. *riglee mbargila* his legs are tangled up with each other. *ħaaga tbargıl il-muxx* something which throws the brain into confusion. -vn *bargala*; ava/pva *mibargil*.

اتبرجل *ʔitbargil* /vi/ to be confused, be thrown into disarray. -iva *mitbargil*.

ب ر ج ل [2]

برجل *bargal* <T *pergel* from P> /n pl *baraagil*/ *[geom]* compass, pair of compasses. *bargal maqaṣṣ* combined calipers. *bargal baṭṭiixa* external calipers. *bargal fooka* divider (in metalwork).

برجله *bírgula, bírjula, pírgula, pírjula* <prob It *pergola*> /n pl *-aat*/ summer-house.

ب ر ج ى ه

بروجيه *burujeeh* <Fr *projet*> /n/ draft. *ṣafħaat burujeeh* page proofs.

ب ر ج ل -

برجلاتك *bırgalaatak ħırgalaatak birgalaatak ħalaqa dahab fi-wdanaat-ak* chant used in the ceremonies for a newborn child on *yoom is-subuuɛ*.

ب ر ح [1]

برح *baraħ (a)* /vi/ to take one's ease, act in a free and easy fashion. *baraħ fik-kalaam* (1) he waxed eloquent. (2) he talked too much. *ma-tıbraħ-f' fiiha - xallii-k ɛala qadd-ak* ≈ don't run away with yourself; keep within your limits. -vn *baraaħ*; ava *baariħ*.

براح *baraaħ* **1** /n/ spaciousness, vastness. *ʔıl-waaħid bi-yħiss' bil-baraaħ fiṣ-ṣaħra* one gets a feeling of openness in the desert. || *xad baraaħ-u* to behave freely, take one's ease, as in *xadt' baraaħ-i fıf-fuʏl* I settled down to the work contentedly and without interference, *xad baraaħ-u fif-faqqa* he did just as he liked in the flat. **2** /adj invar/ spacious, roomy. *faqqa baraaħ* a spacious flat. *xalli l-fustaan baraaħ min taḥt ıl-wisṭ* make the dress full below the waist.

استبرح *ʔistabraħ* /vt/ to select for spaciousness. *humma baqa stabraħu faqqit-na ɛan faqqit-ku* they felt our flat to be roomier than yours. -vn *ʔistibraaħ*; ava *mistabraħ*.

ب ر ح [2] see - ء م ب ا : *ʔimbaariħ*

ب ر د [1]

برد *birid (a, a)* /vi/ **1** to become cold, cool off. *ħuṭṭ-u fit-tallaaga ɛafaan yibrad* put it in the refrigerator to cool. || *ʔibrad fiwayya* (1) don't get so excited! (2) behave yourself! **2** to feel chilly, become chilled. *ʔana bridt - ħ-aruuħ ʔalbis balṭu* I feel cold; I'll go and put on a coat. **3** to be soothed. *ħuṭṭ il-marham ɛal-garħ' yibrad* put the ointment on the wound and it will be soothed. **4** to become a boor, behave insensitively or shamelessly. -vn *buruud, baradaan, baraada*; ava *baarid, bardaan*.

برود *buruud* /n/ **1** frigidity, reserve. *ɛamil-ni b-buruud* he treated me coldly. *ɛandaha buruud* she is frigid. *buruud il-ʔingiliiz* English sangfroid. **2** insensitivity, shamelessness.

برادة *baraada* /n/ shamelessness, insensitivity.

بارد *baarid* /adj/ **1** cool, cold (of inanimate things). *mayya barda* cold water. || *ʔalwaan barda* (ceramic) colours that do not need firing. - *ʔin-nuqṭa l-barda* paralysis. - *ɛeen-i barda ɛala ...* *[women in trad soc]* may my eye not harm ... (prophylactic phrase used to ward off the evil that may be attracted inadvertently by admiration), as in *ya gamaal-u - ɛeen-ı barda ɛalee* what a pretty (child) - may my eye not harm him! **2** mild (to the taste). *ṭumbaak baarıd* mild tobacco. *filfil baarid miʃ ħaami* mild rather than hot pepper. **3a** insensitive. || *damm-u baarid* he's stolid. **3b** unabashed, shameless. *ya baarıd - ma-bi-tħiss'-ʃ xaaliṣ* you boor! have you no feelings? **4a** uninspiring, flat *nukta barda* a dull joke. *kalaam baarid* tedious talk. *faṣl' baarid* a rotten trick. **4b** dull, blunt. *sikkiina barda* a blunt knife.

بردان *bardaan* /adj */ cold (of persons).

برد *bard* /n/ **1** cold weather, coldness. *fi-ʔayyaam il-bard' bi-nʏaṭṭii-ha* during the cold weather we cover it. *bi-yitrıɛiʃ mın il-bard* he's trembling from the cold. -/adjectivally/ *ʔid-dunya bard* it's cold. **2** cold, chill. *xad bard* he caught a cold. *lıssa xaarig min door bard* I've just got over a bit of a cold.

أبرد *ʔabrad* /el/ colder/coldest, milder/mildest etc. || *ʔabrad min mayyit ṭuuba [prov]* (colder than the water

in the month of Tuba) ≈ thoroughly unlikeable (a play on *baarid* 1 and 3).
برودة *buruuda* /n/ **1** coldness (of temperature). **2** frigidity.
برّاد *barraad*[1] /n pl *-aat, bararriid*/ **1** teapot. **2** kettle.
برّد *barrad* /vt/ **1** to cool, make cold. **2** to soothe. ‖*ħaaga tbarrad il-ʔalb* something that (1) reassures, soothes the nerves, (2) quenches thirst. - vn *tabriid*; ava *mibarrad*.
تبريد *tabriid* /vn/ ‖*ʔamiiṣ it-tabriid [auto]* cylinder sleeve. - *muhandis tabriid* engineer specializing in cooling systems.
مبرّد *mubarrid* /n pl *-aat*/ water cooler.
اتبرّد *ʔitbarrad* /vi/ to be cooled. - iva *mitbarrad*.
استبرد *ʔistabrid, ʔistabrad* /vt/ **1** to consider cold. *lamma ʔastabrad ig-gaww aʔuum ʔalbis balṭu* when I find the weather cold I put on a coat. **2** to consider shameless. – /vi/ **3** to behave shamelessly. *matistabrad-ʃ* behave yourself! - vn *ʔistibraad*; ava *mistabrad*.

ب ر د [2]
برد *barad (u)* /vt/ to file, file down. *bi-nubrud-u ʕaʃaan nifiil iz-ziyadaat* we file it to remove the surplus. - vn *bard, baradaan*; ava *baarid*; pva *mabruud*.
برادة *biraada, buraada* /coll n/ filings.
برّاد *barraad*[2] /n */ **1** filer. **2** fitter. *barraad kahrabaaʔi* electrical fitter.
مبرد *mabrad* **1** /n pl *mabaarid*/ file, rasp. *mabrad deel faar* a rat-tail file. ‖*lisaan-u mabrad* he has á sharp tongue. **2** /adj invar/ having a twill weave (of material).
اتبرد *ʔitbarad* /vi/ to be filed. - iva *mitbirid*.

ب ر د [3]
بريد *bariid* /n/ post, mail. *saaʕi bariid* postman, mailman. *sanduuq bariid* (1) mail-box. (2) post-office box. *hayʔit il-bariid* the General Post Office. *bariid gawwi* airmail. *bi-ruguuʕ il-bariid* by return post.
بريدى *bariidi* /adj/ postal.

ب ر د [4]
بردة *burda* /n pl *-aat*/ *[obsol]* type of cloak or mantle worn by women.

ب ر د [5] see ب ر و د : *baruud, baruuda*

ب ر د [6] see ب ر ى د : *biriid*

ب ر د ج
بردج *biridj* <Engl> /n/ **1** bridge (card game). **2** *[naut]* bridge (of a ship).

ب ر د ه
برودروه *burudruh* or *burudurooh* <Fr *bordereau*> /n pl *-aat*/ *[comm]* account book.

ب ر د ى
برودرى *burudri* <Fr *broderie*> /n/ embroidery.

ب ر د ع
بردعة، برذعة *bardaʕa* /n pl *baraadiʕ*/ donkey-saddle (made of stuffed sacking). *yisiib il-ħumaar wi-yitʃaṭṭar ʕal-bardaʕa [prov]* (he lets the donkey off but takes it out on the saddle) he punishes the weak for the faults of the strong out of fear of what the strong may do.

ب ر د ف –
برادیفير *biradifeer* (also *biladifeer*) <Fr *bras de fer*> /n/ Indian wrestling.

ب ر د ق
بردق *bardaq: ħoof bardaq* /prop n/ low-class district of Cairo. *zayy*[i] *btuuʕ ħoof bardaq* uncouth.

ب ر د ق –
بردقوش *bardaquuf, bardaqoof* <P *marza-gosh*> /n/ marjoram.

ب ر د و
بوردو *burdu* <It *bordo*> /n/ *[naut]* **1** gunwale. *looħ il-burdu* gunwale strake. **2** railing round a ship's deck.

ب ر د و ر
بردورة *burduura* <perh It *bordura*> /n pl *-aat*/ kerb-stone.

ب ر د ى
بردى *bardi* /coll n/ papyrus.

ب ر ذ ع see ب ر د ع

ب ر ر [1]
بَرّ *barr*[1] /n/ land (in contrast with sea). *ʔil-wuṣuul li-barr il-ʔamaan* a safe landfall. *ʔilli ʕal-barr*[a] *ʕawwaam [prov]* (he who is on land is a (strong) swimmer) ≈ it's easy to talk big when one is not put to the test, it's easier to criticize than to act. *ʔiħna lissa ʕal-barr* (we're still on dry land) we haven't committed ourselves yet, there's still time to reconsider. *ṣoot-u ygiib il-barr* (his voice reaches the shore) his voice is extremely loud. *rasa ʕala barr* (to come eventually to

land) to reach a conclusion, find a solution, as in *ʕayziin nirsi ʕala barr* we want to settle the matter. *gab-ha l-barr* (to bring it to land) /used figuratively, usually in negative contexts/ (1) to bring about a satisfactory solution. (2) to behave in a reasonable fashion, as in *mif raaḍi ygib-ha l-barr* he's not prepared to behave reasonably.

برّى *barri* /adj */ **1** pertaining to land (as opposed to sea and air). *ʃin-naql il-barri* overland transport. **2** wild (as opposed to domestic). *ḥamaam barri* wild pigeons.

برّيّة *barriyya↑* /n/ open land, wasteland.

برّه، برّا *barra* **1** /prep/ outside. *barra maṣr* outside Egypt. *barra l-beet* outside the house. **2** /adv/ **2a** outside, out. *xalli l-kalb ' barra* keep the dog outside. *mil-ḥeeṭa l-barra* from the wall outwards. *ʃif-farr ' barra w-biʕiid* ≈ God forbid! (prophylactic phrase accompanying the mention of something unpleasant). ‖ *ʃiṭlaʕ li-barra [naut]* head for sea! - *min barra (l-)barra* (1) without calling in at home, as in *haat maʕaak jakitta ʕafaan niruuḥ is-sinima min barra barra* bring a jacket with you so that we can go straight on to the cinema. (2) on the sly, on the quiet, as in *bi-yibqa fid-dukkaan iṣ-ṣubḥ ' w-baʕd iḍ-ḍuhr ' b-yiftaval fi-warʃa min barra barra* he's at the shop in the mornings and works on the sly at a workshop in the afternoon. **2b** abroad. *lissa raagiʕ min barra* he's just returned from abroad. – /nominally/ *bitaaʕ barra* from abroad, as in *ʠumaaʃ bitaaʕ barra* cloth from abroad.

برّانى *barraani* /adj */ **1** outer. *ʃil-baab il-barraani* the outside door. **2** /invar/ false. *filuus barraani* counterfeit money.

برّمائى *barr'maaʃi* /adj/ amphibious.

ب ر ر ²

برّ *barr (i)* /vt/ to look after (o.s., especially by eating well). *birr ' nafs-ak* look after yourself (i.e. don't be so miserly with yourself). *bi-ybirr ' nafs-u* he is self-indulgent. - ava *baarir*.

برّ *barr² (i)* **1** /vi/ to be faithful (to a promise). *barreet bi-waʕd-i* I kept my word. **2↑** /vt/ to honour, treat with deference and devotion. ‖ *ḥagg ' mabruur* greeting to one returning from a pilgrimage to Mecca. - vn *barr, birr*; ava *baarr*; pva *mabruur*.

برّ *birr* /n/ charitableness, piety, devotion.

بارّ *baarr* /adj pl *ʃabraar*/ **1** pious, righteous. **2** showing devotion (to parents, teachers etc.), charitable (to the poor etc.). – /n/ **3** Beneficent One (epithet of God).

المبرّة *ʃil-mabarra* (also *mustaffa l-mabarra*) /n/ fee-paying hospital organization (with branches throughout Egypt).

برّر *barrar* /vt/ to justify. *ʃil-ʏaaya tbarrar il-wasiila* the end justifies the means. - vn *tabriir*; ava *mubarrir↑*.

مبرّر *mubarrir* /n pl *-aat*/ reason, justification. *ʃeeh mubarriraat-ak* what are your reasons?

اتبرّر *ʃitbarrar* /vi/ to be justified. - iva *mitbarrar*.

ب ر ر ³

برّ *barr³* /n pl *buruur*/ **1** door-jamb. **2** window-ledge.

ب ر ر و

برّو *birru* /n/ *[naut]* bolt, lug.

ب ر ر ي ه

بريه *burreeh* <perh T *bire*> *[women]* exclamation of exasperation ≈ that's the limit! *burreeh minnak* you're the limit!

ب ر ز ¹

برز *baraz¹ (i, u)* /vi/ **1** to protrude, project. *ʃil-ḥuruuf bi-tibriz min il-xalf* the letters protrude from the other side. **2** to become outstanding. *faxṣiyyaat barza* prominent personalities. **3** to amount to a surplus (of money etc.). *ḥalaat buruuz ʃiraad* instances of surplus takings. - vn *buruuz*; ava *baariz*.

بروز *buruuz* /n pl *-aat*/ **1** protrusion. **2** dowel.

بارز *baariz¹* /n pl *bawaariz*/ **1** surplus. *baariz ʃiraad* surplus receipts. **2** /pl only/ *[bank]* unaccountable surplus of money after auditing.

بارزة، برزة *barza, burza* /n pl *buruuz*/ facial crest (of a horse).

براز *buraaz* /n/ faeces, solid excrement.

اتبرّز *ʃitbarraz* /vi/ to defecate. - ava *mitbarraz*.

بارز *baariz²* /vt/ to fight a duel with. - vn *mubarza*; ava *mubaariz*.

مبارزة *mubarza* /n pl *-aat*/ duel.

اتبارز *ʃitbaariz* /vi/ **1** to duel. **2** to be fought with in a duel. - ava/iva *mitbaariz*.

أبرز *ʃabraz* /vt/ **1** to emphasize. *ʃil-loon il-ʃazraʕ bi-yibriz gamaal ʕenee-ki* blue shows off the beauty of your eyes. **2** to bring out. *laazim tibriz gawaaz is-safar* you must show your passport. - vn *ʃibraaz*; ava *mubriz*.

ب ر ز ²

برز *baraz² (i, u)* <perh P *barâz*> /vt/ to join together (two ends of a broken thread, strand of wool etc.). *ʃibriz il-fatla di kiwayyis* join this thread together firmly! - vn *buruuz*; ava *baariz*.

برّز *barraz = baraz²*. - vn *tabriiz*.

مبرّزاتى *mubarrazaati* /n pl *-yya/ [text]* warp-mender in a weaving shop.

ب ر ز[3] see ب ر ي ز : *bariiz, bariiza*

ب ر ز ي ل
برازيل *ʕil-baraziil* /prop n/ Brazil.
برازيلى *baraziili* **1** /adj */ Brazilian. **2** /n */ a Brazilian.

ب ر س see ب ر ي س : *bariis*

ب ر س ت
بريستو *biristu* <brand name *Presto*>: *ḫalla bristu* pressure cooker.

(ب ر س ت -)
بروستاتة *burustaata, burustaata* /n/ *[anat]* prostate gland.
برستول *biristul* <Engl *Bristol*>: *waraq biristul* a type of medium-grade heavy white paper, used for drawing and calligraphy.
بروستانتى *burustanti* <Engl> /adj pl *burustant*/ *[Chr]* Protestant. - also *burutistanti*.

ب ر س ف -
بروسفارين *birusfariin* <cf Gr *prospherein*> /n/ *[Chr]* cloth with which the offertory is covered on an altar. - also *ʕibrusfariin*.

ب ر س ل
برسل *bursul* /n pl *baraasil*/ *[text]* selvage.

ب ر س ل -
بورسيلين *bursiliin* <Engl> /n/ porcelain.
بورسيلان *bursilaan* <Fr *porcelaine*> /n/ porcelain.

ب ر س و م
برسوم *barsuum* /prop n/ male given name. ‖*qiraaṭ barsuum* linear measure equal to 0.087 centimeters.

ب ر س و -
برسوار *biriswaar* (also *biniswaar*) <Fr *périssoire*> /n pl *-aat*/ paddle-board, surf-board.

ب ر س ي م
برسيم *barsiim* <Copt> /coll n/ Egyptian clover (Trifolium alexandrinum). ‖*toor allaah fi-barsiim-u* see *toor*.
براسيم *barasiim* /pl n/ fields of clover.
برسيمى *barsiimi* /adj invar/ bright green in colour.

ب ر ش
برش *baraʃ (u)* <Copt> **1** /vi/ to sit or squat (on the ground) without concern for decorum or the cleanness of the place. **2** /vt/ to sit (s.o.) down (on the ground). - vn *barʃa, barʃa*; ava *baarif, baarif*; pva *mabruuf, mabruuf*.
برش *burf* <Copt> /n pl *ʕabraaf*/ coarsely-woven mat of palm leaves or palm fibre (used particularly in prisons for sleeping on).
اتبرش *ʔitbaraf* /vi/ to sit or squat (on the ground) without concern for decorum or the cleanness of the place. - ava *mitbirif*.
انبرش *ʔinbaraf = ʔitbaraf*.
مبرّش *mibarraf* /adj */ sitting or squatting on the ground.

ب ر ش ت
برشت *birift* or *buruft* <P *birishta*> /adj invar/ soft-boiled (of eggs).

ب ر ش ت ت
باراشوت *barafutt* <Fr> /n pl *-aat*/ parachute. - also *barafuut*.

ب ر ش م
برشم *barfim* /vt/ **1** to rivet, seal or fix tightly. **2** *[slang]* to make small written notes for use in cheating in (an examination). - vn *barfama*; ava/pva *mibarfim*.
برشام *birfaam, burfaam* <P *parchîn*> /coll n/ **1** pill(s). **2** rivet(s). *markib birfaam* a riveted ship. **3** *[slang]* minutely written material for use in cheating in an examination.
برشامة *birfaama, burfaama* /unit n, pl *-aat*/ **1** a pill. **2** a rivet. **3** /also pl *barafiim, barafiim*/ *[slang]* crib, note for use in cheating in an examination.
اتبرشم *ʔitbarfim* /vi/ **1** to be riveted, be tightly sealed or fixed. **2** *[slang]* **2a** to be cheated in (of an examination, when cribs are used). **2b** to be minutely written for use as a crib in an examination. **3** to fall silent, shut up. - ava/iva *mitbirfim*.

ب ر ش و ت
باراشوت *barafuut* <Engl> /n pl *-aat*/ parachute. - also *barafutt*.

ب ر ش و م
برشوم *barfuum* /prop n/ Barshum, a town in Qalyubiya province.
برشومى *barfuumi* /adj */ pertaining to or from Barshum. ‖*tiin barfuumi* figs (in contrast with *tiin fooki* prickly pears).

ب ر ص[1]
برّص *barraṣ* /vt/ *[naut]* to splice. - vn *tabriiṣ*; ava/pva *mibarraṣ*.

[2] ب ر ص
برص *baraṣ* /n/ *[path]* vitiligo.
أبرص *ʔabraṣ* /adj, fem *barṣa*, pl *burṣ*/ afflicted with vitiligo.
مبورص *mibooraṣ* /adj */ afflicted with vitiligo.

[3] (ب ر ص)
برص *burṣ* /n pl *ʔabraaṣ*/ gecko. *ɛaamil zayy il-burṣ* small and shrivelled in appearance. *ɦabb-ak burṣ* may a gecko kiss you! (a curse based on the folk belief that the gecko is a carrier of skin disease, mainly used in curt response to *ʔana b-aɦibb-ik*).
بورصة *burṣa* <It *borsa*> /n pl *-aat*/ **1** stock exchange, bourse. **2** large café.

ب ر ض ك see ب ر ض و : *barḍak*

ب ر ض و
برضه، برضو *barḍu* (also *barḍak*) <perh T *bır de*> /adv/ **1** also, too. *ɦa-tiigi maɛaana barḍu* are you going to come with us too? **2** nevertheless, even so, all the same. *barḍu mif faahim ɋaṣd-ak ʔeeh* even so, I don't understand what you mean. *b-aḍrab-ha kull' yoom wi-barḍu ma-fii-ʃ fayda* I beat her every day but still it makes no difference. **3** intensifier ≈ really, surely. *mif kida barḍu* isn't that so? don't you agree? *huwwa da kalaam barḍu* is that any way to talk? ‖*kida barḍu* response of reproach ≈ really now!

ب ر ط
برط *baraṭ (u)* /vi/ *[coarse]* to defecate. - vn *barṭa*; ava *baariṭ*; pva *mabruuṭ*.
برطة *barṭa* /n pl *-aat*, *buraṭ/ [coarse]* faeces, shit.
اتبرط *ʔitbaraṭ* /vi/ *[coarse]* to sit or squat (on the ground).

ب ر ط ا ن
بريطاني *biriṭaani, bariṭaani*↓ **1** /adj */ British, (loosely) English. **2** /n */ a Briton, (loosely) an Englishman.

ب ر ط س see ب ر ط و س : *barṭuus*

[1] ب ر ط ش
برطوس *barṭuuʃ'* /coll n/ old out-of-shape shoes.
برطوسة *barṭuuʃa* /n pl *baraṭiiʃ/* old out-of-shape pair of shoes. ‖*kalaam il-baraṭiiʃ* (verbal) clangers. - *raas-u w-ʔalf' barṭuuʃa* (or *-baraṭiiʃ il-balad) ma-* he won't ... at any price, as in *ras-ha w-ʔalf' barṭuuʃa ma-tsaafir maɛaahum* wild horses won't make her travel with them. - *manɋuuɛ il-baraṭiiʃ* cheap liquor, rot-gut.
برطف *barṭaf* /vt/ **1** to wear (shoes) until out of shape. ‖*ɦ-abarṭaf-ak* I'll flatten you! – /vi/ **2** to act clumsily or ineffectively. *ʔır-raagil da bı-ybarṭaf fi-fuʁl-u* that man does a sloppy job. **3** to run, blotch (of colours, paints etc.). - vn *barṭaʃa*; ava/pva *mıbarṭaf*.
اتبرطس *ʔitbarṭaf* /vi/ to be worn out of shape (of shoes). - iva *mıtbarṭaf*.

[2] ب ر ط ش see ب ر ط و ش : *barṭuuf*[2]

ب ر ط ط
برطّ *buruṭṭ* /adj pl *-aat*/ slothful and slovenly.
برطّه *buruṭṭa = buruṭṭ*.

ب ر ط ع
برطع *barṭaɛ* /vi/ **1** to gallop about, run and prance about (of donkeys). **2** *[joc]* to gallivant about, gad about. *ʔıl-waaɦid yıxallaṣ ımtiɦanaat wi-ybarṭaɛ baɋa ɛala keef-u* one finishes exams and then one's free to gad about as it suits one. - vn *barṭaɛa*; ava *mibarṭaɛ*.

ب ر ط ل
برطيل *barṭiil* /n pl *barṭiil/* bribe.
برطل *barṭal* /vt/ to bribe. - vn *barṭala*; ava/pva *mibarṭal*.
اتبرطل *ʔitbarṭal* /vi/ to be bribed. - iva *mıtbarṭal*.

[1] ب ر ط م
برطم *barṭam* (also *barṭan*) /vi/ **1** to speak gibberish, talk incoherently. *mibarṭam zayy it-turk* ≈ talking double-Dutch. **2** to mutter crossly, grumble. - vn *barṭama*; ava *mibarṭam*.

[2] ب ر ط م see [1] ب ر ط و م : *barṭuum*

ب ر ط م -
برطمان *barṭamaan* <*Martaban* (in Burma)> /n pl *-aat*/ glass or plastic jar with lid, jam jar. - also *baṭramaan*.
برطمانة *barṭamaana = barṭamaan*. - also *baṭramaana*.

ب ر ط ن see ب ر ط م : *barṭan*

ب ر ط و س
برطوس *barṭuus* <It *pertuzo*> /n pl *baraṭiis/ [naut]* seamen's quarters or storeroom (on a steamer). - also *barṭuuf*.

ب ر ط و ش
برطوس *barṭuuf*[2] <It *pertuzo*> /n pl *baraṭiiʃ/ [naut]*

seamen's quarters or storeroom (on a steamer). - also *barʃuus*.

ب ر ط و م
برطوم *barʃuum* <It *bertone*> /n pl *baraʃiim*/ **1** beam or block of wood. **2** pontoon, beam. **3** *[naut]* lighter.

ب ر ع
برع *baraɛ (a)* /vi/ to become skilled, excel. *baraɛt^{i} fil-koora* I excelled in football. - vn *baraaɛa*; ava *baariɛ*.
أبرع *ʕabraɛ* /el/ more/most skilled.
اتبرّع *ʕitbarraɛ* /vi/ to make a donation. *ɛawziin naas itbarraɛ bi-damm* they want people to donate blood. - vn *tabarruɛ*; ava *mitbarraɛ*.
تبرّع *tabarruɛ* /n pl *-aat*/ donation.

ب ر ع م
برعم *burɛum*↑ /n pl *baraaɛim*/ bud. || *ʕil-baraaɛim* the younger generation.

ب ر غ ت
برغوت، برغوث *barɣuut* /n pl *baraɣiit*/ flea. *kull^{i} barɣuut ɛala qadd^{i} damm-u [prov]* ≈ from each according to his ability. || *baraɣiit is-sitt* sugar-coated caraway seeds. - *ħafiifit il-baraɣiit* fleawort (Plantago psyllium).
مبرغت *mibarɣit, mibarɣat* /adj */ flea-infested.

ب ر غ ش
برغش *barɣaʃ* /vt/ to prick holes in (a paper pattern, in order to transfer a design). - vn *barɣaʃa*; ava *mibarɣaʃ*.

ب ر غ ل [1]
برغل *burɣul^{1}* <prob T *burgu*> /n pl *baraaɣil*/ any of a variety of tools for making and adjusting holes in metal.
برغل *barɣal* /vt/ to smooth off, edge off (holes bored in metal). - vn *barɣala*; ava/pva *mibarɣal*.

ب ر غ ل [2]
برغل *burɣul^{2}* <T *burgul*> /n/ boiled and crushed wheat, used in the preparation of certain dishes.

ب ر ف see ب ر و ف : *biroova*

ب ر ف ا ن
بارافان *barafaan, baravaan* <Fr *paravent*> /n pl *-aat*/ screen, folding screen. - also *barawaan*.

ب ر ف س ت
بروفستا *burufista* <It *provvista*> /n/ *[naut]* provisions.

ب ر ف ی ل
بروفيل *birufiil* <Fr> /n/ profile. - /adverbially/ *ʕuqaf birufiil* stand sideways-on.

ب ر ف ی ن
برافين *barafiin* <Engl> /n/ paraffin. *zeet barafiin* mineral oil.

ب ر ق
برق *baraq (u)* /vi/ **1** to shine, sparkle. *bi-nnaqqaf-u wi-nlammaɛ-u ɛaʃaan yubruq* we clean and polish it so it shines. **2** to flash (of lightning). - vn *barq*; ava *baariq*.
برق *barq* /n/ lightning. *raɛd^{i} w-barq* thunder and lightning.
برقة *barqa* /n pl *-aat*/ **1** gold disc on a necklace. **2** metal sequin.
برقيّة *barqiyya* /n pl *-aat*/ telegram.
بريق *bariiq* /n/ **1** glitter, lustre. **2** allure. *ħaaga liiha bariiq xaaṣṣ^{i} lis-saayiħ* something with a special appeal for the tourist.
برّاق *barraaq* /adj/ radiant. *ʕalwaan barraaqa* radiant colours.
مبرق *mabraq* /n pl *mabaariq*/ telegraph transmitter.
برّق *barraq* **1** /vt/ to open (the eyes) wide. *ʕinta bi-tbarraq ɛenee-k kida leeh* why are you staring like that? **2** /vi/ to stare, open wide (of the eyes). *ɛenee barraqit wi-ɣaab ɛan il-waɛy* his eyes were fixed and he lost consciousness. - vn *tabriiq*; ava *mibarraq*.

ب ر ق ع
برقع *burquɛ* /n pl *baraaqiɛ*/ **1** veil (usually of black crepe and gold) worn to cover the lower part of the face (see Pl.F, 8). *ʃayla burquɛ il-ħaya* she has taken off the veil of modesty (said of a woman who behaves in a shameless fashion). *ʕil-ʕaħsan tilbis burquɛ* (you'd better wear a veil) ≈ you behave like a woman (an insult to a man). *taħt il-baraaqiɛ simm^{i} naaqiɛ [prov]* (under the veil is deadly poison) though modest in appearance, a person may be highly immoral. **2** valance, pelmet. **3** wattle (on the head of a turkey etc.).
برقع *barqaɛ* /vt/ to veil with a *burquɛ*. - vn *barqaɛa*; ava *mibarqaɛ*.
اتبرقع *ʕitbarqaɛ* /vi/ to veil o.s., put on a veil. *ɛandina burquɛeen burquɛ iṭbarqaɛnaa-bu w-burquɛ matbarqaɛna-buu-ʃ* we have two veils, one we have worn and one we haven't (a tongue-twister). - ava *mitbarqaɛ*.

ب ر ق و ق
برقوق *barquuq* <Gr *praikokion*> /coll n/ plum(s).

برقوقة *barquuqa* /unit n, pl *-aat*/ a plum.
برقوقاية *barquqaaya* = *barquuqa*.

ب ر ك ¹
بركة *baraka* /n pl *-aat, -aat*/ blessing, grace, divine favour (manifested especially as good fortune, plenitude) charismatic quality. ‖ *ʃil-baraka fii(k)* (1) thanks to (you), the credit should go to (you), as in *kull' feeʃ tamm' zayy' ma-nta ɛaayiz - ʃil-baraka f-bint-i* 'Everything went just the way you wanted.' 'It's all thanks to my daughter.' (2) it all depends on (you), as in *dawwar ɛala waẓiifa taakul minha ɛeeʃ - ʃil-baraka fiik* 'Find yourself a job to keep body and soul together.' 'I'm depending on you (to find me one).' (3) expression of condolence ≈ it's for you to fill the place of the deceased. - *bil-baraka* ≈ without undue concern, without bothering to be precise, as in *bi-yaaxud filuus-u bil-baraka* he takes his money without counting it, *bi-ybiiɛ il-baṭṭiix bil-baraka* he sells water-melons without bothering to weigh them. - *(w-allaahi) baraka* thank heavens! - *baraka ya gaamiɛ (illi gat minnak wala gat-f' minna)* exclamation of relief at finding oneself released from an obligation. - *ɋallit barakit-u* it is (or was) no longer successful. - *ɋillit baraka* a source of misfortune. - *ɋaliil il-baraka* scanty, insufficient, as in *ʃil-bufteek da ɋaliil il-baraka* - *ʃiɛmili-lna ṭabiix* fried steak doesn't go very far; make us a stew! - *ḥaṣalit il-baraka* ≈ you have brought a blessing to our house (said to a guest). - *ya barakit duɛa l-waldeen*↓ may the blessing of my parents' prayers assist me (said before any undertaking). - *ɛala barakit illaah* invocation of God's blessing (said before any undertaking). - *ʃil-xeer wil-baraka* source of good fortune, as in *da-nta (fiik) il-xeer wil-baraka* we can always depend on you for anything. - *ʃil-baraka fil-bukuur* ≈ the early bird catches the worm. - *luɋmit il-baraka [Chr]* (a piece of) unconsecrated eucharistic bread. - *ḥabbit il-baraka* seed of fennel flower (Nigella sativa) used in the preparation of, e.g., chest ointment and some types of bread.
أبرك *ʃabrak* /el/ more/most useful, effective, etc. *da l-faṣṣ il-waaḥid min il-burtuɋaan ʃabu ṣurra ʃabrak min ɛaʃara min is-sukkari* one segment of a navel orange is more nourishing than ten of a *sukkari* one.
بروكة *baruuka, baruuka'* /n pl *-aat*/ lucky piece, charm. *ʃana ʃayil-ha baruuka* I'm carrying it for luck.
مبروك *mabruuk* **1** /adj */ blessed with divine favour. *ʃaxuu-k da raagil mabruuk* your brother has a saintly air about him. *rabb-i-na yigɛal-ha sana mabruuka ɛaleek* may God make it a prosperous year for you! **2** plentiful (beyond expectation). *ʃil-mahiyya mabruuka f-ʃahr-i-da* the wages have gone a long way this month. *ʃakl' mabruuk* food that proves to be sufficient for more people than expected. **3** /invar/ congratulatory exclamation said to someone on a happy occasion or on the acquisition of something new ≈ congratulations! as in *mabruuk ɛala l-jakitta* congratulations on the new jacket! *ʃalf' mabruuk* many congratulations! ‖ *mabruuk ɛal-ʃarḍ* congratulàtions on your new shoes!
مبروكة *mabruuka* /n/ measles.
بارك *baarik* /vi/ **1** to give blessing. *rabb-i-na miʃ ḫa-ybarik-lu f-ɛiyaal-u* God will not bless him with regard to his children. ‖ *ʃallaah yibaarik fiik* (God bless you) (1) conventional response to *mabruuk*. (2) expression of thanks for a favour or service rendered. **2** *[Chr]* **2a** to pronounce a blessing, invoke a blessing. **2b** to say grace (before a meal). **3** to give congratulations. *bi-ybarku l-baɛḍ* they congratulate each other. — /vt/ **4** *[Chr]* to bless. - vn *mibarka*; ava *mibaarik*.
مبارك *mubaarak* **1** /adj */ fortunate, blessed. *ramaḍaan mubaarak* blessed and happy Ramadan. ‖ *xaṭwa mbarka* ≈ what good fortune brought you here! (greeting to a visitor). - *ya mubaarak* friendly form of address imputing naivety, as in *kull in-naas masmuuḫ luhum is-safar bass' miin ya mubaarak illi ɛandu fluus* (of course) everyone is allowed to travel, but bless your heart, who do you think can really afford it! **2** congratulatory exclamation said to someone on a happy occasion or on the acquisition of something new ≈ congratulations!, as in *mubaarak ɛal-fustaan* congratulations on the (new) dress!
اتبارك *ʃitbaarik* /vi/ **1a** to receive a blessing. *kull' ma b-aʃuuf-u b-atbaarik-bii* it's always a blessing to see him. *ʃin-naas tiruuḫ iḍ-ḍariiḫ ɛalaʃaan titbaarik bii* people go to the tomb to receive a blessing. **1b** *[Chr]* to be blessed (ritually). *baɛḍ il-ɛaruseen ma tbarku* after the bride and groom have been blessed. **2** to be converted into a blessing. *lamma tiɛmil ṭayyib bi-yitbarik-lak fi-gary-ak* when you do good it brings you a blessing in your daily life. - ava/iva *mitbaarik*.
تبارك *tabaarak: tabaarak allaah*↑, *tabaarak il-xallaɋ* blessed be God! used as an exclamation of wondrous admiration, as in *ɛaleeha gamaal tabaarak il-xallaɋ (fiima xalaɋ)* ≈ she's such a beauty! blessed be God for creating her!
استبرك *ʃistabrak* = *ʃitbaarik* 1a. - ava *mistabrak*.
استبارك *ʃistibaarik* = *ʃitbaarik* 1a. - iva *mistibaarik*.

ب ر ك [2]

برك *barak, birik (i)* /vi/ **1** to kneel (particularly of a camel). **2** to throw one's whole weight (on top of s.o. or s.th.). *waqqaʕt-u fil-ʃarḍ[i] w-barakt[i] fooq-u* (or *ʕalee*) I threw him to the ground and flung myself upon him. ‖*barak ʕal-filuus* he appropriated all the money. **3** to reach the end of one's endurance. *qaʕadit tiftaʏal fil-maktab wil-beet wi-tihmil fi-ʃakl-a-ha l-ʏaayit-ma barakit* she went on working in the office and the house, and neglecting her food till she was in a state of complete collapse. - ava *baarik*.

برّك *barrik* /vt/ **1** to make (a camel) kneel. **2** to make someone fall (on s.o. or s.th.). - vn *tabriik*; ava *mibarrik*.

اتبرّك *ʃitbarrik* /vi/ passive of *barrik*. - iva *mitbarrik*.

ب ر ك [3]

بركة *birka* /n pl *birak*/ pool, pond. ‖*wiff il-birka* a *ḥayy* in Central Cairo (formerly known in particular as a red light district). - *birkit il-fiil* a *ḥayy* in Cairo, between Sayyida Zaynab and the Citadel.

ب ر ك [4] see ب ر و ك : *baruuka* [2]

ب ر ك [5] see ب ر ى ك : *bureek, bureeka*

ب ر ك ا ر

بروكار *burukaar* <Fr *brocart*> /n/ brocade.

ب ر ك ا ن

بركان *burkaan* /n pl *barakiin*/ volcano.

ب ر ك ى ت

بركيتة *barkiita* <It *barchetta*> /n/ *[naut]* ship's log.

ب ر ك ى ه

بركيه *barkeeh* <Fr> /n pl *-aat*/ parquet flooring.

ب ر ل ك س

برلكس *barlaks* <perh Gr *parallaksis*> /n pl *-aat*/ *[Chr]* antiphon.

ب ر ل ن ط

برلنط *birlanṭ* <It *brillante*> /n/ brilliant-cut diamond. *xaatim birlanṭ* diamond ring.

ب ر م [1]

برم *baram (u)* /vt/ **1a** to twist, twirl. *baram ʃanabaat-u* he twirled his moustache. *laazim tubrum il-ḥabl* you must twist the rope. **1b** *[text]* to rove (threads or fibres). **2** to roll, roll up. *kunaafa mabruuma* kunaafa wrapped spirally round a filling (usually of nuts) to form rolls. ‖*ʃibrum-ha* ≈ you know where you can stuff that! — /vi/ **3** to be frittered away (of money). **4** to wander about, go around. *baramna wi-tfassaḥna* we wandered around and enjoyed ourselves. - vn *barm*; ava *baarim*; pva *mabruum*.

¶ *baram ʕala* to search for. *fiḍilt abrum ʕalee li-ḥadd[i] ma xadt[i] fluus-i* I kept on looking for him until I got my money.

مبروم *mabruum* /n/ *[text]* worsted.

مبرومة *mabruuma* /n/ **1** cylindrical variety of mango. **2** okra. **3** home-made pasta rolled into very small pieces, steamed and served with sweetened milk.

برمة *burma[1]: musmaar burma* screw. *masamiir burma* screws.

برمجي *burmagi* /n pl *-yya*/ **1** one who is suave and commanding. **2** philanderer. see further under ب ر م ج [1]

برم *buram* /adj invar/ **1** suave and commanding. **2** dissolute.

برم *burum: furum burum* (1) mess, chaos. *ʃil-ḥikaaya ʃilʕit furum burum* the thing turned out a mess. (2) nonce phrase used in spells ≈ abracadabra.

بريم *bariim* = *burmagi*.

برّام *barraam* /n */ **1** *[text]* rover, operator of a roving machine. **2** *barraam (ḥabl) [naut]* rope-spinning swivel. **3** devious person, twister.

برّيمة *barriima* /n pl *-aat*/ **1** thread (of a screw). *musmaar barriima* a screw. — /pl *bararriim, barrimaat*/ **2** corkscrew. **3** swirl (of hair, on a horse). **4** rowlock. **5** (oil) drill.

اتبرم *ʃitbaram* /vi/ **1a** to be twisted, be twirled. **1b** *[text]* to be roved. **2** to be rolled, be rolled up. - iva *mitbirim*.

اتبرم *ʃinbaram* = *ʃitbaram*. - iva *minbirim*.

برّم *barram* /vt and vi/ **1** to twist, twirl (a number of things or a number of times). *qaaʕid yibarram (f-) ʃanabaat-u* he keeps on twirling his moustache. **2** *[text]* to rove (a number of threads or fibres). - vn *tabriim*; ava/pva *mibarram*.

أبرم *ʃabram↑* /vt/ to conclude (e.g., a contract), ratify (e.g., a treaty). - vn *ʃibraam*.

إبرام *ʃibraam* /vn/ ‖*maḥkamit in-naqḍ[i] wil-ʃibraam [leg]* Court of Cassation. - *ʃayy[i] ḥukm[i] yquul-u ma-f-huu-ʃ naqḍ[i] ʃaw ʃibraam* no decision of his is ever challenged.

ب ر م [2]

برمة *burma[2]* /n pl *buram*/ (squat narrow-necked) earthenware vessel (see Pl.A, 4).

برام *biraam* /n pl *ʕibrima, biríma/* earthenware casserole.

ب ر م [3]
برما *birma* /prop n/ small town near Tanta, renowned for egg production. ‖ *ḫisbit birma* an insoluble problem, an inexplicable matter (i.e. which only the quick-witted egg merchants of Birma could work out).

ب ر م [4] see ب ر و م : *baruuma*

ب ر م [5] see ء ب ر ى م : *ʕabriim, ʕabriimi*

ب ر م ب
برمبة *burumba* <*Burumba* (in Guiza province)>: *sabɛ' burumba [deris]* swank, coxcomb.

ب ر م ت ر
بارومتر *barumitr* <Fr *baromètre*> /n pl *-aat/* barometer.

ب ر م ج [1] see also ب ر م [1]
برمجة *barmaga↓* /n/ **1** suaveness, artful sophistication. **2** dissoluteness.
اتبرمج *ʕitbarmag'* /vi/ **1** to affect an appearance of sophistication. *ma-titbarmag-ʃ' ɛaleena ya ɛamm - da-ḫna naas ʁalaaba* don't be highfalutin with us, mate, we're only ordinary folk. **2** to behave in a dissolute fashion. - ava *mitbarmag*.

ب ر م ج [2]
برنامج *birnaamig* /n pl *baraamig/* **1a** programme. *birnaamig musiiqi* musical programme. *birnaamig ʂeefi* summer programme. **1b** (computer) program. **2** curriculum, timetable, schedule.
برمج *barmag↑* /vt/ to programme. - vn *barmag↑*; ava/ pva *mibarmag*.
اتبرمج *ʕitbarmag²↑* /vi/ to be programmed. - iva *mitbarmag*.

ب ر م ق
برمق *barmaq* <T *parmak*> /n pl *baraamiq/* **1** banister. **2** spoke (of a wheel). - also *barnaq*.

ب ر م ن -
برمنجنات *birmanganaat* <Fr> /n/ potassium permanganate.

ب ر م ه -
برمهات *baramhaat* <Copt> /n/ seventh month of the Coptic year (10 March - 8 April). *baramhaat ruuḫ il-ʁeeţ wi-haat* in Baramhaat (it is time to) go to the field and bring (whatever you like, because the fields are full of crops).

ب ر م و د
برموده *baramuuda* <Copt> /n/ eighth month of the Coptic year (9 April - 8 May). *baramuuda duqq if-fiɛiir bil-ɛamuuda wala yibqa fil-ʁeeţ wala ɛuuda* in Baramuuda pound the barley with the pestle, and let not a stalk remain in the field.

ب ر م و ن
برمون *baramoon* <Gr *paramonê*> /n/ *[Chr]* **1** period of fasting before the feasts of Christmas and Epiphany (in the Coptic Church). **2** the day before a feast day.

ب ر م ى ل
برميل *barmiil* /n pl *baramiil, baramiil/* **1** barrel. *ɛuqdit taşbiin barmiil* barrel hitch. ‖ *barmiil yadd* Archimedes' screw. **2** capstan.
براميلجى *baramilgi* /n pl *-yya/* cooper.

ب ر ن
برنيّة *birniyya, barniyya* /n pl *baraani/* earthenware pot or dish glazed on the inside.

ب ر ن ا - see ب ر م ج [2] : *birnaamig*

ب ر ن ج
برنج *burung* <T *bürüncük*> /n/ *[obsol]* georgette crepe, gauze. - also *burunguk, burunguq, burungug*.

ب ر ن ج ى
برنجى *biringi* <T *birinci*> /adj invar/ **1** first. **2** best.

ب ر ن ج - see ب د ن ج - : *biringaan*

ب ر ن د
برندة *baranda* <prob Engl> /n pl *-aat/* veranda. - also *faranda*.

ب ر ن ز
برونز *burunz* <perh Fr> /n/ **1** bronze. **2** metallic paint. *burunz' dahabi* gold metallic paint.
برونزة *burunza*: such phrases as *ma-maɛii-ʃ wala brunza* I haven't a penny.
برونزى *burunzi* /adj/ **1** pertaining to bronze. **2** bronze-coloured.

(ب ر ن س)
برنس *burnus* /n pl *baraanis*/ **1** cape or cloak (usually with a hood). **2** *[Chr]* cope worn by priests and bishops during the liturgy. **3** bathrobe, beachrobe.
برنس *birins* <Engl> /n pl *-aat*/ prince.
برنسيسة *birinsiisa* <Engl> /n pl *-aat*/ princess.

ب ر ن ك
برنك *birink* <It *paranco*> /n pl *-aat*/ running stretcher (in a slaughterhouse) on which a carcass is hung.

ب ر ن ق [1]
برنق *barnaq'* **1** /vt/ to cause (the eyes) to stare. *kaan mibarnaq-li ɛenee* he was staring at me. **2** /vi/ to stare. - ava *mitbarnaq*.

ب ر ن ق [2]
برنق *barnaq²* <T *parmak*> /n pl *baraaniq*/ **1** banister. **2** spoke (of a wheel). - also *barmaq*.

ب ر ن ى ط
برنيطة *burneeṭa* /n pl *baraniiṭ, burneṭaat*/ **1** hat. **2** lamp shade.

ب ر ه [1]
البوره *ʔil-burah* /prop n/ male spirit sometimes invoked in the *zaar*.

ب ر ه [2] see ب ر ى ه : *bireeh, bureeh*

ب ر ه م
البرهاميّة *ʔil-burhamiyya* /prop n/ Sufi Order named after Sidi Ibranim ed-Disuqi.

ب ر ه ن
برهان *burhaan, burhaan↑* /n pl *barahiin*/ **1** proof, evidence. *ʔeeh il-burhaan ɛala wuguud illaah* what is the proof of God's existence? **2** sign, token, augury.
برهن *barhan* /vi/ to give proof, provide evidence. *laazim tibarhan ɛak-kalaam da* you have to back up this assertion with proof. - vn *barhana*; ava *mibarhan*.
اتبرهن *ʔitbarhan* /vi/ (impersonal) passive of *barhan*. *ʔik-kalaam da tbarhan ɛalee* that claim was proved. - iva *mitbârhan*.

ب ر و [1]
بروة *barwa'* <perh P *pâro*> /n pl *baraawil*/ plasterer's trowel.

ب ر و [2] see ب ر ى [1] : *barwa²*

ب ر و ا ن
بروان *barawaan* <Fr *paravent*> /n pl *-aat*/ screen, folding screen. - also *barafaan, baravaan*.

ب ر و ج ى see ب و ر ى : *buruugi*

ب ر و د
بارود *baruud* <perh P *bârûd*> /n/ gunpowder. *malḫ baruud* saltpetre.
بارودة *baruuda↓* /n pl *baruud*/ rifle.

ب ر و ز
بروز *birwaaz* <T *pervaz* from P> /n pl *barawiiz*/ any frame or edging (e.g., picture frame).
براويزجى *barawizgi* /n pl *-yya*/ (picture) framer.
بروز *barwiz* /vt/ to frame, surround. ‖*ḫ-abarwiz ʔism-ak* I'll hold you in great esteem. - vn *barwaza*; ava/pva *mibarwiz*.
اتبروز *ʔitbarwiz* /vi/ to be framed, be surrounded. - iva *mitbarwiz*.

ب ر و ش
بروش *buroof* <Fr *broche*> /n pl *-aat*/ brooch.

ب ر و ف
بروفة *biroova* <It *prova*> /n pl *-aat*/ **1** rehearsal. **2** fitting. *ʔit-tarzi ɛawiz-ni li-broova tanya* the tailor wants me for another fitting. **3** *[print]* proof, proof sheet.

ب ر و ق
بروق *barwaq* **1** /vt/ **1a** to cause to shine. **1b** to make resplendent (especially by decoration and ornamentation). *kaanit mibarwaqa ʔooḍit in-noom tamaam* she had made the bedroom look splendid. **2** /vi/ to shine, gleam. - vn *barwaqa*; ava/pva *mibarwaq*.
اتبروق *ʔitbarwaq* /vi/ **1** to shine, gleam. **2** to become or be made resplendent. - ava/iva *mitbarwaq*.

ب ر و ك
باروكة *baruuka²* <perh It *parrucca*> /n pl *-aat*/ wig.

ب ر و ل
برول *barwil* **1** /vt/ to crumble (between the fingers). **2** /vi/ to become crumbly. *ʔil-fiṭiir mibarwil xaaliṣ* the pastry is very crumbly. - also *farwil*. - vn *barwala*; ava *mibarwil*.
اتبرول *ʔitbarwil* /vi/ **1** to be crumbled. **2** to become crumbly. - also *ʔitfarwil*. - ava/iva *mitbarwil*.

(ب ر و م)
بارومة *baruuma*[1] <Gr *brôma*> /n/ rust, corrosion.
برومة *baruuma*[2] <It *paroma*> /n/ *[naut]* mooring rope, painter.

ب ر و و
برّوة *baruwwa* <It *prua*> /n pl *-aat/ [naut]* bow (of a ship). *kawirtit l-baruwwa* foredeck. *fil-baruwwa* right ahead!

ب ر ى [1]
برى *bara*[2] or *bara (i)* /vt/ **1** to trim or sharpen to a point. *ʕibrii-li ɋalam* sharpen me a pencil! **2** to wear down, wear away. *ʕif-fuɤl' bara l-ʕazmiil* the work wore away the chisel. ‖ *ʕil-hamm' baraa-ni* the worry wore me out. - vn *bary*; ava *baari*; pva *mabri*.
برية *barya* /n pl *-aat/* **1** /inst n/ a sharpening. **2** sharpened end (e.g., of a pencil).
بروة *barwa*[2] **1** /n pl *-aat, baraawi/* worn-down piece (of soap). **2** /adj invar/ quick-witted.
برّاية *barraaya* /n pl *-aat/* (pencil) sharpener.
اتبرى *ʕitbara* /vi/ **1** to be trimmed or sharpened to a point. **2** to be worn down, be worn away. *ʕiş-şabun-da b-yitbiri b-surɛa* that kind of soap wears away quickly. ‖ *ʕitbara nuşş" ɛaɋl-i* (half my mind is worn away) I'm so worn out I can hardly think. - iva *mitbiri*.
انبرى *ʕinbara* = *ʕitbara*. - *minbiri*.

ب ر ى [2]
بارى *baara* /vt/ to compete with. *ma-ɧadd'-ʃ yibarii fig-gary* no one can compete with him at running, no one can run as fast as he. - vn *mubaraah*; ava *mibaari*.
مباراة *mubaraah* /n pl *mubaraat, mubarayaat/* competition, contest, match. *fii talat mubarayaat il-ɧadd'-da* there are three matches this Sunday.
اتبارى *ʕitbaara* /vi/ to compete. - ava *mitbaari*.

ب ر ى [3] see ب ر ء [1]: *bara, bari, ʕitbarra, ʕistabra, ʕistibarra*

ب ر ى [4] see ب ر ء [2]: *baari, barıyya*

ب ر ى د
بريد *biriid* <Fr *bride*> /n/ *[needlew]* bar. *ɛirwa briid* button-hole consisting of a worked bar.

(ب ر ى ز)
باريز *bariiz* /prop n/ Paris. - also *bariis*.
بريزة *bariiza*[1] /n pl *baraayız/* ten piastres, ten-piastre coin or note.
بريزة *bariiza*[2], *biriiza* <Fr *prise*> /n pl *baraayiz/* **1** *[elec]* point, socket. **2** *[plumb]* water outlet.

ب ر ى س
باريس *bariis* /prop n/ Paris. - also *bariiz*.

ب ر ى ك
بوريك *bureek* <T *börek*> /coll n/ small pastries with sweet or savoury filling.
بوريكة *bureeka* /pl *-aat/* unit noun of *bureek*.

ب ر ى م و
بريمو *biriimu* <It *primo*> /adj invar/ **1** first-class. *ʕakl' briimu* top-notch food. *sawwaaɋ biriimu* a first-class driver. — /n/ **2** first dish of a meal (in a restaurant, etc.). **3** *ʕil-biriimu* top prize-winning ticket! (cry of the lottery-ticket seller).

(ب ر ى ه)
بريه *bireeh* <Fr> /n pl *-aat/* beret.
بريه *bureeh* <poss Fr *bureau*> /n pl *-aat/* tallboy.

ب ز ب ز
بزبوز *bazbuuz* /n pl *bazabiiz/* **1** small spout (e.g., on a water jug). **2** small protrusion.
بزبز *bazbiz* /vi/ **1** to exude or emerge in droplets. *fii xurm' şɤayyar il-mayya bi-tbazbiz minnu* there is a small hole from which the water drips. *ʕil-ɛaraɋ baɋa ybazbiz min wiff-u* drops of sweat began to ooze from his face. **2** to put out protuberances. *gism-u bazbiz xaaliş* his whole body has come out in pimples. *farɛ if-fagara bi-ybazbiz* the branch of the tree is putting out buds. - vn *bazbaza*; ava *mibazbiz*.

ب ز ر see ب د ر [3]: *bizr, bizra, bizraaya*

ب ز ر ك
بزرك *bazrak* <P *buzurg*> /n/ *[mus]* name given to E half flat (on the fourth space of the staff).

ب ز ر م -
بزرميط *bazramiiţ* /adj invar/ **1** of mixed blood, mongrel. **2** chaotic, topsy-turvy. - also *baẓramiiţ*.

ب ز ز
بزّ *bizz* /n pl *bizaaz/* **1** any small protuberance or projection (e.g., nipple, stud, bud, knot (in wood)). ‖ *bizz ir-rigl* ankle bone. **2** breast, udder. ‖ *ɛinab bizz (il-ɛanza)* variety of sweet elongated grape. - *bizz il-kalb [bot]* name given to varieties of Zygophyllum, Polygo

num and Mesembryanthemum. - *gaab il-xabar min bizz umm-u* ≈ he got the news straight from the horse's mouth. - *huwwa lissa mif ɛaarif ʃariiq bizz umm-u* ≈ he's still wet behind the ears. - *huwwa ʃaarib min bizz umm-u↓* ≈ he has great strength and courage.
بزّة *bizza = bizz.*
بزّازة *bazzaaza* /n pl *-aat*/ **1** feeding bottle, nursing bottle. **2** teat or nipple of a feeding bottle.

ب ز ق [1]
بزق *bazq* /coll n/ *[agric]* onion sprout(s). ‖ *bazq[i] baɛli* baby onions (sown from seed of ordinary onions and often pickled).
بزقة *bazqa* /unit n, pl *-aat*/ an onion sprout.
بزقاية *bazqaaya = bazqa.*

ب ز ق [2]
بزق *bazaq (u)* /vt/ to spit. - vn *bazq*; ava *baaziq*; pva *mabzuuq.*
بزاق *buzaaq* /n/ spittle, saliva.
بزّاقة *bazzaaqa* /n pl *-aat*/ spittoon.
بزّق *bazzaq* /vt/ to spit. - vn *tabziiq*; ava/pva *mibazzaq.*

ب ز ق [3]
بزق *buzuq* <T *bozuk*> /n/ *[mus]* bouzouki.

ب ز ل [1]
بزل *bazl* /n/ *[surg]* tapping, paracentesis. *ʃaalit bazl* trocar and cannula. *bazl id-damm* phlebotomy.
مبزل *mabzal* /n pl *mabaazil*/ opening in a furnace for the removal of ash and cinders.

ب ز ل [2]
بذل *bazal↑ (i)* /vt/: *bazal guhd* (or *guhuud*) to exert effort, take pains. - vn *bazl*; ava *baazil*; pva *mabzuul.*
مباذل *mabaazil* /pl n/ vices.
ابتذال *ʃibtizaal* /n/ indecency, vulgarity.
مبتذل *mubtazal* /adj */ indecent, vulgar.

ب ز ل ت
بازلت *bazalt* <Fr> /n/ basalt.
بازلتي *bazalti* /adj/ of or pertaining to *bazalt.*

ب ز م see ء ب ز ي م : *ʃabziim*

ب ز ن ط see ب ي ز ن ط : *bizanṭi*

ب س see ب ا ص [1] : *bas*

ب س ا ر
بسارة *bisaara* <Copt> /n/ dish of dried broad beans, cooked with spices and herbs, and mashed. - also *buṣaara.*

ب س ب ا س
بسباسة *bisbaasa [1]* (also *bisbaasa hindi)* /n/ mace (spice).

ب س ب ر ت
باسبورت *basaburt* <Engl> /n pl *-aat, -aat*/ passport. - also *basboor.*

ب س ب س
بسبس *basbis* /vi/ **1** to call puss-puss-puss (to a cat). **2** to tell tales, gossip. *kaan bi-ybasbis ɛaleek quddaam ṣaḥbak* he was telling tales about you in front of your friend. - vn *basbasa*; ava *mibasbis.*
بسبس *bisbis* /interj/ sound made in calling to a cat.
بسباسة *bisbaasa [2]* /n pl *basabiis*/ woman given to spiteful gossip.

ب س ب و ر
باسبور *basboor* <Fr *passeport*> /n pl *-aat*/ passport. - also *basaburt.*

ب س ب و س
بسبوسة *basbuusa* /coll n/ sweetmeat of baked semolina, soaked in syrup.

ب س ت ا ل
بستال *bustaal* <Fr *postale*>: *kart[i] bustaal* /pl *kuruut bustaal*/ postcard. *ṣuura kart[i] bustaal* postcard-size photo.

ب س ت ا ن
بستان *bustaan* <P *bustân*> /n pl *basatiin*/ garden.
البساتين *ʃil-basatiin* /prop n/ village to the north of el-Ma'adi, famous for its cemetery.

ب س ت ر
بستر *bastar* <prop n *Pasteur*> /vt/ to pasteurize. - vn *bastara*; ava *mibastar.*
اتبستر *ʃitbastar* /vi/ to be pasteurized. - iva *mitbastar.*

ب س ت ف
بستف *bastif* /vt/ to scold, give (s.o.) a piece of one's mind. - vn *bastafa*; ava/pva *mibastif.*
اتبستف *ʃitbastif* /vi/ to be scolded. - iva *mitbastif.*

ب س ت ل ل
بستلّة *bistilla, bastilla* <It *mastella*> /n pl *-aat/* large metal container or kettle for holding liquid.

ب س ت ل ى
بستليه *bastilya* <It *pastiglia*> **1** /coll n/ small sugar candies, pastilles. **2** /unit n, pl *-aat/* a small sugar candy, a pastille.
بستليايه *bastilyaaya = bastilya* 2.

ب س ت م
بستم *bistim* <Engl> /n pl *basaatim/* piston. *binz il-bistim* piston ring. - also *bistin*.

ب س ت ن
بستن *bistin* <Engl> /n pl *bâsaatin/* piston. *binz il-bistin* piston ring. - also *bistim*.

ب س ت ن - ب
بستنكار *bastanikaar* <P *basta-nigâr*> /n/ *[mus]* mode in Arabic music beginning on B half flat and having E half flat and G flat.

ب س ت و ن
بستونى *bastooni, bastuuni* <It *bastoni*> /n/ clubs (in cards).

ب س ت ى ش
بوستيس *bustiif* <Fr *postiche*> /n pl *-aat/* hair-piece.

ب س ت ى ك
بستيكة *bastiika* <It *pastecca*> /n/ *[naut]* block, snatch block.

ب س ج ى ر
بسجيرى *basajeeri* <It *passeggeri*>: *markib basajeeri* passenger ship.

(ب س خ)
بسخة *basxa*[1] <Copt> /n pl *-aat/* foot of a plough, to which the ploughshare is attached (see Pl.D, 21). - also *başxa*.
بسخه *basxa*[2] <Syr> /n/ *[Chr]* service held on each of the four days preceding Good Friday. - also *başxa*.

ب س ر [1]
بر *basr* /coll n, pl *busuur/* pimple(s), spot(s).
برة *basra* /unit n, pl *-aat/* a pimple, a spot.

ب س ر [2]
بواسير *bawasiir* /pl n/ *[path]* haemorrhoids, piles.

ب س ر [3] see ب س ا ر : *bisaara*

ب س ر ى
بسارية *bisarya* <perh Gr *psari*> /coll n/ **1** fry of certain Nile fishes, especially the *libiis* (Labeo sp.). **2** sand-smelt.

ب س س [1]
بسّ *bass[1] (i)* /vt/ *[cook]* to rub (ingredients) together (in the making of cakes and pastries). - vn *bass, basasaan*; ava *baasis*; pva *mabsuus*.
بسيسة *bisiisa, basiisa* **1** /n/ sweet pastry, based on maize flour. **2** /adj invar/ (accidentally) crumbled or squashed.

ب س س [2]
بسّ *bass[2] (i)* /vt/ to instil (into s.o.) inspire (in s.o.). *manaazir muxiifa tʕassar fil-ʕatfaal wi-tbiss' fihum ir-ruɛb* frightful scenes which affect children and fill them with terror. - vn *bass, basasaan*; ava *baasis*; pva *mabsuus*.
اتبسّ *ʕitbass* /vi/ to be instilled (into s.o.), be inspired (in s.o.). - iva *mitbass*.

(ب س س) [3]
بسّ *bass[3]* <P *bas*> **1** /interj/ enough! *bass - wala kilma* enough! not one word more! || *wi-bass* and no more, as in *ɛala qadd' maqdarit-ha w-bass* according to her means and no more. - *lamma qaal ya bass* to the maximum, as much as possible, as in *qaɛadt aqrab fii li-ɤaayit lamma qaal ya bass* I beat him till he could take no more, *firibna lamma qulna ya bass* we drank till we could drink no more. **2** /adv/ only, just. *ɛafaan xaṭr-ak bass* just for you. *sibuu-ni ʕaxuff' bass* just let me in. *kunt[a] ɛaayiz ʕaɛraf bass* I just wanted to know. *law bass[a] ḥadd' ysaɛid-ni* if only someone would help me. **3** /conj/ but, however. *ruuḥ - bass' fii farṭ* go! but there's a condition. *ma huwwa mabsuuṭ kida - bass' ʕana laʕ* well, he's happy like that, but I'm not!
بسّ *buss: ma-fii-ʃ buss' wala huss* ≈ there are no ifs and buts about it.
بسّ *biss[1]* /interj/ **1** sound made to a cat, usually in order to shoo it away. **2** sound made to attract the attention (e.g., of a waiter).
بسّ *biss[2]: ḥiss-ak biss-ak* ≈ just you dare!

ب س س [4] see ب س و س : *basuus*

ب س ط [1]
بسط *basaṭ (i)* /vt/ **1** to give pleasure to, make happy.

laazim il-waaḥid yibsiṭ nafs-u one has to enjoy oneself. *ʕil-lelaa-di nawyiin nibsiṭ-ku* tonight we intend to give you a good time. ‖ *ʕibsiṭ ya ɣamm* there you are, everything is O.K. (said to one whose problem is solved). - *basaṭ ʕaxlaaq-u* it cooled his temper, it brightened his mood. **2**↑ to unfold, spread out. ‖ *basaṭ kaff-u* (he opened his palm) he was charitable. - vn *basṭa*; ava *baasiṭ*; pva *mabsuuṭ*.

باسط *baasiṭ*[1] /n/ Giver of bounty (epithet of God). ‖ *ɋuul ya baasiṭ* ≈ take it easy! don't fret!

مبسوط *mabsuuṭ* /adj */ **1** pleased, content. *ʕintu mabsuṭiin hina* are you happy here? *ʕana mabsuuṭ minnak* I'm pleased with you. **2** exhilarated, high (as a result of drink, drugs etc.). *ʃirib lamma baɋa mabsuuṭ* he drank till he had a glow on. **3** well-off, rich. *kaan fallaaḥ bass*[1] *mabsuuṭ* he was a peasant, but comfortably-off.

بسط *basṭ*[1] /n/ numerator of a fraction.

بسطه *basṭa*[1] /n pl *-aat*/ landing (on a staircase).

بساط *busaaṭ* /n pl *ʕabsiṭa*/ **1** carpet. ‖ *ʕil-busaaṭ ʕaḥmadi* ≈ things are quite informal. - *busaaṭ ir-raḥma* large cloth, usually of black velvet marked with a cross, spread out and carried from the corners by four bearers in front of the coffin in Christian funeral processions. **2** floor of a (boxing or wrestling) ring.

بساطه *basaaṭa* /n/ ease, simplicity. *bi-bäsaaṭa* simply, to put it simply.

بسيط *basiiṭ* /adj pl *busaṭa, busaaṭ*/ **1** simple, easy. *ḥa-niɣmil tagriba basiiṭa* we'll make a simple experiment. *ɣaawiz tigaddid ʕiqamt-ak - basiiṭa* you want to renew your residence permit? that's a simple matter. ‖ *ʕil-muʃtarak il-basiiṭ [math]* lowest common denominator. **2** unpretentious, unassuming. *huwwa taagir basiiṭ* he's a small-time trader. *ʕiḥna naas busaṭa* we're simple folk. **3** simple-minded, naive. **4** small (in quantity or extent). *ruff-a-ha b-kimmiyya basiiṭa min if-farbaat* sprinkle it with a little syrup. *bi-yḥibb*[1] *yitfalsif laakin ɣala basiiṭ* he likes to go in for a little philosophizing. *law giri tibɋa garyit-u basiiṭa* even if he does run, he can't run much. **5** slight, insignificant (in intensity). *wagaɣ basiiṭ* a slight pain. – /adv/ **6** to a limited degree, to a small extent. *ma-ʃii-ʃ ḥadd*[1] *muḥtarif ʕilla basiiṭ* there are only a few professionals. *bi-tiwgaɣ basiiṭ* it hurts a little

البسيطه *ʕil-basiiṭa*[1] /n/ the earth. *ɣala ɋahr il-basiiṭa* on earth.

اتبسط *ʕitbasaṭ* /vi/ **1** to be or become pleased or content. *ʕiɣmil il-waagib kuwayyis ɣaʃaan il-ʃabla titbisiṭ minnak* do your homework well so that Teacher will be pleased with you. **2** to become exhilarated (as from drink, drugs etc.). **3** to enjoy oneself. *ʕitbasaṭna ɋawi fi-skindiriyya s-sana lli faatit* we had a really good time in Alexandria last year. - ava/iva *mitbisiṭ*.

انبسط *ʕinbasaṭ* = *ʕitbasaṭ*. - vn *ʕinbisaaṭ*; ava *minbisiṭ*.

بسّط *bassaṭ* /vt/ to simplify. - vn *tabsiiṭ*; ava/pva *mibassaṭ*.

اتبسّط *ʕitbassaṭ* /vi/ to be simplified. - iva *mitbassaṭ*.

باسط *baasiṭ*[2] /vt/ to humour (s.o.). *ɋaɣadit tibaṭ-u l-ḥadd*[1] *ma waafiɋ ɣal-beeɣa* she sweet-talked him till he agreed to the transaction. - vn *mubaṣṭa*; ava *mibaasiṭ*.

مباسطه *mubaṣṭa* /n/ cordiality, agreeableness, congeniality. *ʕil-mubaṣṭa fil-kalaam* the niceties of conversation. *ma-tḥibb*[i]*-ʃ il-mubaṣṭa* she doesn't like familiarities.

اتباسط *ʕitbaasiṭ* /vi/ **1** to speak pleasantly. *ɋaɣdiin yitbaṣṭu maɣa baɣḍ ɋalabuu-ha gadd* they were having a light-hearted conversation but then became argumentative. **2** to be humoured. - ava/iva *mitbaasiṭ*.

استبسط *ʕistabsaṭ* /vt/ **1** to consider simple or easy. *ma-tistabsaṭ-ʃ il-masaa ʕil biṭ-ṭariiɋa di* don't take matters that lightly! **2** to select for easiness or simplicity. *ʕistabsaṭ-lu mas ʕala w-ḥall-a-ha* he picked out an easy (mathematical) problem and solved it. - vn *ʕistibsaaṭ*; ava *mistabsaṭ*.

[2] ب س ط

بوسطه *busṭa*[1] <It *posta*> /n/ **1** mail. *maktab busṭa* post office. *waraɋit busṭa* or *ṭaabiɣ busṭa* postage stamp. **2** postal service. *mandubiin min il-busṭa* representatives from the Post Office.

بوسطجى *busṭagi* /n pl *-yya*/ postman, mailman.

[3] (ب س ط)

بسط *basṭ*[2] /coll n/ reed(s). *ɋalam basṭ* reed pen (as used by calligraphers).

بسط *basṭ*[3] <perh Engl> /n/ paste applied to a razor strop to aid sharpening.

بسطه *basṭa*[2] <It *pasta*> /n pl *-aat*/ an Egyptian sweet similar to a mille-feuille.

بسطه *basṭa*[3]: *basṭit faḥm* charcoal ember for igniting the tobacco in a water-pipe.

بسطايه *basṭaaya* = *basṭa*[3].

بسطاوى *basṭaawi* /adj/ pertaining to Tell Basta, near Zagazig. *ɋaff*[i] *basṭaawi* type of stiff straw used in the manufacture of brooms.

بسطه *busṭa*[2] <P *pista*> /n/ small piece of opium or hashish enough for one dose.

ب س ط ر م
بسطرمة *basṭirma* <T *pastırma*> /n/ garlic-and-spice-cured beef.

ب س ق
انبسق *ʃinbasaqˀ* /vi/ to stem, emanate. *lagna nbasaqit min lagna tanya* a committee that grew out of another committee. - vn *ʃinbisaaq*; ava *munbasiq*.

ب س ك ل –
بسكلّتة *biskilitta* <It *bicicletta*> /n pl *-aat*/ bicycle.

ب س ك و ت
بسكوت *baskuut* <It *biscotti*> /coll n/ biscuit(s), cookie(s). - also *baskawiit*.
بسكوتة *baskuuta* /unit n, pl *-aat*/ a biscuit, a cookie. - also *baskawiita*.

ب س ك و ل
بسكول *baskuul* (also *mizaan baskuul*) <Fr *bascule*> /n pl *-aat*/ weighbridge.

ب س ك و –
بسكويت *baskawiit* <Fr *biscuit*> /coll n/ biscuit(s), cookie(s). - also *baskuut*.
بسكويتة *baskawiita* /unit n, pl *-aat*/ a biscuit, a cookie. - also *baskuuta*.
بسكويتاية *baskawitaaya* = *baskawiita*.

ب س ل
باسل *baasil* /adj pl *busala*/ **1** distasteful. ‖*damm-u baasil* he is disagreeable. **2** brave, courageous.

ب س ل ل
بسلّة *bisilla* <It *pisello*> /coll n/ pea(s). *bisillit iz-zuhuur* sweet pea(s).
بسلّاية *bisillaaya* /unit n, pl *-aat*/ a pea.

ب س م [1]
مبسم *mabsam, mabsim* /n pl *mabaasim*/ **1** mouth-piece (of a water-pipe (see Pl.I, 6), wind instrument (see Pl.J, 17 and 19), cigarette-holder etc.). **2** part of rectal syringe which is inserted in the anus.
تبسيمة *tabsiima* /n pl *-aat*/ smile. *ʕaleeha tabsiima tgannin* she has a bewitching smile.
اتبسّم *ʔitbassim* /vi/ to smile. *madd' ʔiid-u wi-tbassim* he stretched out his hand and smiled. - ava *mitbassim*.
تبسّم *tabassam: ʔin-nabi tabassam* even the Prophet smiled! (to get a smile from a girl in the street).
ابتسم *ʔibtasam* /vi/ to smile. *ʔizzaay ʔabtisim w-ana fayfaa-k kida* how can I smile seeing you like this? - vn *ʔibtisaam*; ava *mibtisim*.
ابتسامة *ʔibtisaama* /n pl *-aat*/ a smile.

ب س م [2] see ب س ى م : *basiima*

ب س م ل
بسملة *basmala* /n/ name given to the invocation *bi-sm illaah ir-raḥmaan ir-raḥiim* (in the name of God the Compassionate and the Merciful).
بسملّة *bismilla* /interj/ invitation to a guest to begin eating when food is served ≈ please start!
بسمل *basmil* /vi/ to utter the invocation *bi-sm illaah ir-raḥmaan ir-raḥiim* (said before an undertaking). - vn *basmala*; ava *mibasmil*.
اتبسمل *ʔitbasmil* = *basmil*. - ava *mitbasmil*.

ب س ن د –
بسنديده *basandiida* <P *pasandîda*> /n/ *[mus]* mode in Arabic music.

ب س و س
بسوس *basuus* /prop n/ a village in Qalyubiya province, known for the good quality of its *fammaam* melons.

ب س ى م
بسيمة *basiima* /n/ confection like *hariisa*, but harder and with coconut.

ب ش
باش *baʃ-* <T *baş*> prefix, with occupational titles, indicating higher rank (frequently used by way of complimentary hyperbole). *baʃmuhandis* chief engineer. *baʃkaatib* head clerk. *baʃrayyis* (1) foreman. (2) *[naut]* boatswain. *baʃʃawiiʃ* (also *bitʃawiiʃ*) *[obsol]* sergeant-major (in army or police).

ب ش ب ش
بشبش *baʃbiʃ* <perh Copt> **1** /vt/ to sprinkle with water. ‖*rabb-i-na ybaʃbiʃ iṭ-ṭuuba lli taḥtˀ raas-u* (may God soften the stone head-rest under his head) ≈ may God rest his soul. **2** /vi/ to sprout (of plants). - vn *baʃbaʃa*; ava/pva *mibaʃbiʃ*.
اتبشبش *ʔitbaʃbiʃ* /vi/ to be sprinkled with water. - iva *mitbaʃbiʃ*.

ب ش ب و ر
بشبورى *baʃbuuri* <perh T *başpare*> /n/ nozzle. ‖*raffaaş baʃbuuri [naut]* kort nozzle.

ب ش ت [1]
بشّت *baffit* **1** /vt/ to make penniless. *miraat-i baffitit-ni if-fahr-i-da* my wife finished off all the money I had this month. **2** /vi/ to become penniless. *ʕana mbaffit* I haven't got a penny. - vn *tabfiit*; ava/pva *mibaffit*.
اتبشّت *ʔitbaffit* /vi/ to be made penniless. - iva *mitbaffit*.

ب ش ت ( ) [2]
بشت *bift* /n pl *bifuut, bifúta, bifuuta*/ woollen overgarment of various types, worn by men.
بشت *buft* <P *pusht*> /n pl *bufuut*/ *[coarse, abus]* ≈ sod.

ب ش ت ك
بشتك *baftik* /vt/ to adorn with strips of (coloured) cloth. ‖*miqaffa mbaftika* straw broom bound with cloth strips (to prevent fraying). - vn *baftaka*; ava/pva *mibaftik*.
اتبشتك *ʔitbaftik* /vi/ passive of *baftik*. - iva *mitbaftik*.

ب ش ر [1]
بشرى *bufra* /n/ **1** good news. **2** money or present given to one who first delivers a piece of good news.
بشارة *bifaara* /n pl *bafaayir*/ **1** good omen, portent, augury. **2** money or present given to one who first delivers a piece of good news. **3** *[Chr]* **3a** gospel. *bifaarit matta* the Gospel according to St. Matthew. **3b** *ʔil-bifaara* (1) the Annunciation. (2) (the preaching of) the Gospel.
بشاير *bafaayir* /pl n/ **1** indications. *bafaayir ir-rabiiʕ* the signs of spring. **2** earliest picked fruit of the season. - /adjectivally/ *ʕinab bafaayir* earliest grapes.
بشير *bafiir* /n/ bringer of good tidings. *ʔil-bafiir* epithet of the Prophet Muhammad.
بشّر *baffar* /vt/ **1** to give good news to. *baffar-ni b-nagaaḥ-i* he announced to me the good news of my success. *ʔallaah yibaffar-ak bil-xeer* may God bring you good news (said to one who has performed a favour). **2** *[Chr]* to evangelize. — /vi/ **3** *[Chr]* to act as a preacher or missionary. *baffar bil-ʔingiil been in-niyaam niyaam* he preached the Gospel among the cannibals. **4** to give the first yield (of a crop). *bi-yistimirr[i] f-numuww-u l-ɤaayit ma ybaffar* it continues growing until it gives its first yield. - vn *tabfiir*; ava/pva *mibaffar*.
مبشّر *mubaffir* /n */ *[Chr]* missionary.
اتباشر *ʔitbaafir[1]* /vi/ to look (upon s.th.) as a good omen, be cheered (by s.th.). *ʔitbafirt[i] biiki ʂ-ʂubḥ* it did me good to see you in the morning. - ava *mitbaafir*.
استبشر *ʔistabfar↑* /vi/ to look (upon s.th.) as a good omen, be cheered (by s.th.). *ʔistabfarna bii (xeer)* we took it as a good sign. - vn *ʔistibfaar*; ava *mistabfar*.

ب ش ر [2]
بسر *bafar[1] (u)* /vt/ **1** to flake, shred, grate. *ʂabuun mabfuur* soap flakes. - vn *bafr, bafr*; ava *baafir*; pva *mabfuur, mabfuur*.
بشرة *bafara* /n pl *-aat*/ **1a** skin, surface. **1b** complexion. *bafara duhniyya* an oily complexion. **2** *[text]* finish.
مبسرة *mabfara* /n pl *mabaafir*/ grater.

ب ش ر [3]
بسر *bafar[2]* /n/ **1** human being. *ʔil-waaḥid barḍu bafar* after all, one is only human. **2** *ʔil-bafar* mankind. **3** ↓ *[euphem]* penis.
بشرى *bafari* /adj/ human. *ḍaḥiyya bafariyya* human sacrifice. *ḍufdaʕ bafari* frogman. ‖*duktoor bafari* physician.

ب ش ر [4]
باشر *baafir* /vt/ **1** to undertake, carry out, perform. *bi-yḥibb[i] ybaafir kull[i] ḳaḍiyya b-nafs-u* he likes to handle each case himself. *bi-ybaafir ʕamal-u fil-bank* he carries out his job at the bank. *maḥruum min mubafrit il-ḥuḳuuḳ is-siyasiyya* deprived of exercising political rights. **2** to supervise. *miʃ ʕawziin ḥadd ybafir-na* we don't want anyone to supervise us. - vn *mibafra, mubafra↑*; ava *mibaafir, mubaafir↑*; pva *mubaafar↑*.
مباشرة *mubaafaratan↑* /adv/ directly.
مباشر *mubaafir* **1** /n */ supervisor. **2** /adj */ direct. *ʔittiṣaal mubaafir* direct communication. *bi-tḥaawil tiʕraf ʔasraar-i b-ṭariiḳa ɤeer mubafra* she tries to find out my secrets by indirect means. *sabɤaat mubafra [text]* direct colours.
اتباسر *ʔitbaafir[2]* /vi/ to be supervised. - iva *mitbaafir*.

ب ش ر [5] see ب ش و ر : *bafawra*

ب ش ر ت
بوسرت *bufirt* <poss Engl *bush shirt*> /n pl *-aat*/ *[mil]* fatigue shirt.

ب ش ر ف
بشرف *bafraf* <P *pish-rav*> /n pl *bafaarif*/ *[mus]* instrumental form having a 4/4 signature (and characteristically longer than the *samaaʕi*).

ب ش ر ق
بشرق *bafraḳ* /vt/ to give (s.o.) a treat (usually by

spending money). *kull' baaba ma yzur-na ybafraq-na b-qirfeen* every time my father comes to visit us he spends money on us generously. ‖*bafraq ɛenee* to feast one's eyes, give one's eyes a treat. - vn *bafraqa*; ava/pva *mibafraq*.

بسرقة *bafraqa* /n/ luxury. *ʔin wugid il-ɛeef yibqa l-malḥ' bafraqa [prov]* (if bread is available, then salt is a luxury) ≈ first things first.

اتبسرق *ʔitbafraq* /vi/ to treat oneself, spend money freely on pleasure. - ava *mitbafraq*.

ب ش ر و ش

بسروس *bafarooʃ* <Copt> /coll n/ flamingo(s). ‖*zayy' ɛuud il-bafarooʃ* very tall and thin.

ب ش ش

بس *baʃʃ (i)* /vi/ to smile, look happy. *saaɛit ma ʃaf-ni baʃʃ' f-wiʃʃ-i* as soon as he saw me, his face lit up. - vn *bafaafa, bafafaan*; ava *baafif*.

بسوس *bafuuf* /adj/ smiling, genial.

ب ش ع

بسع *bifiɛ, bafiɛ'* /adj */ hideous, abominable.

أبسع *ʔabfaɛ* /el/ more/most hideous or abominable.

بساعه *bafaaɛa* /n/ hideousness, frightfulness. *taṣarrufaat-u f-muntaha l-bafaaɛa* his behaviour is absolutely appalling.

بسع *baʃʃaɛ* /vi/ to commit outrages. *ʔil-kalb' baʃʃaɛ fiihum bi-nyaab-u* the dog savaged them with his fangs.

استبسع *ʔistabfaɛ* /vt/ to consider hideous or abominable. - vn *ʔistibfaaɛ*; ava *mistabfaɛ*.

ب ش ك

بسكه *bafka* /n/ a type of card game.

ب ش ك ر

بسكر *bafkar* /vt/ to gut, clean out (a carcass). - vn *bafkara*; ava/pva *mibafkar*.

بسكار *bifkaar* /n pl *bafakiir*/ one who cleans out carcasses.

(ب ش ك و ر)

بسكور *bafkuur* /n pl *bafakiir*/ long metal rod with a hooked end (used, e.g., by bakers for removing trays from the oven).

بسكوره *bafkuura* /n/ head of the penis (in animals).

ب ش ك ى ر

بسكير *bafkiir* <P *pesh-gir*> /n/ **1** terry cloth, terry towelling. **2** /pl *bafakiir*/ bath towel.

ب ش ل

بسلة *bafla* or *bifla* /n pl *bifal, biflaat*/ *[non-Cairene]* any small sharp instrument usable as a weapon.

ب ش ل م –

بسلميط *baflamiiṭ* /n/ *[joc]* penis.

ب ش ل ى ك

بسليك *bafliik* <perh T *başlık*> /n pl *bafaliik*/ neck edging of a galabiya (see Pl.F, 4).

ب ش م [1]

بسم *bafam (i)* /vt/ to surfeit. *ʔid-dihn' b-yibfim wi-yxalli l-waaḥid ma-yiqdar-f' yaakul* fat gives one a feeling of uncomfortable fullness and makes one unable to eat (anything else). - vn *bafam, bafamaan*; ava *baafim*; pva *mabfuum*.

بسمان *bafmaan* /adj */ suffering from a feeling of being full (rich food).

اتبسم *ʔitbafam* /vi/ to be surfeited. - iva *mitbifim*.

ب ش م [2]

تبسم *tabfiim* /n/ rivetıng.

ب ش م [3] see ب ش ى م : *bafiima*

ب ش م ل

بسمله *bafmala* /coll n/ loquat(s).

ب ش م ل لِ

بسمِل *bifamill, bafamill* <Fr> /n/ bechamel sauce.

بسمله *bifamilla, bafamilla* = *bifamill*.

ب ش ن س

بسنس *bafans* <Copt> /n/ the ninth month of the Coptic year (9 May to 7 June). *bafans' b-yiknis il-beet* (or *il-ʔarḍ') kans* Bashans sweeps the house (or ground) clean (because stores run out prior to the next harvest).

ب ش ن ق

بسنق *bafnaq* /vt/ to wrap or veil (the head or neck). *bafnaqit wiff-a-ha bit-ṭarḥa* she covered her face with the veil. - vn *bafnaqa*; ava/pva *mibafnaq*.

بسنيقة *bufneeqa* /n pl *bafaniiq, bufneqaat*/ muffler, scarf, head-veil.

اتبسنق *ʔitbafnaq* /vi/ to be wrapped or veiled (of the head or neck). - iva *mitbafnaq*.

ب ش ن ن

بسنين *bafniin* <perh Copt> /coll n/ lotus(es).

بسنينه *baſniina* /unit n, pl *-aat*/ a lotus.
بسنن *baſnin* /vi/ to expand or freshen up as a result of soaking in water. *ḫuṭṭi l-baqduunis fi-mayya ɛaſaan yibaſnin* put the parsley in water to freshen it up. *ſaxad duff' w-ṭiliɛ wi-wiff-u mbaſnin* he took a shower and came out with his face glowing. - vn *baſnana*; ava *mibaſnin*.
اتبسنن *ſitbaſnin* = *baſnin*. - ava *mitbaſnin*.

ب ش و ر
بسورة *baſawra* <T *paçavra*> /n pl *-aat*/ blackboard duster, chalk eraser.

ب ش ى م
بسيمه *baſiima*↓ /n pl *baſaayim*/ after-birth (of animals). - also *maſiima*.

ب ص ا ر
بصارة *buṣaara* <Copt> /n/ dish of dried broad beans, cooked with spices and herbs and mashed. - also *bisaara*.

ب ص ب ص [1]
بصبص *baṣbaṣ* /vi/ to ogle, make eyes, leer (often with accompanying suggestive remarks). *w-ana b-abaṣbaṣ liz-zabaayin wi-ſeeh yaɛni* so I make eyes at the customers, what of it? - vn *baṣbaṣa*; ava *mibaṣbaṣ*.
بصباص *biṣbaaṣ* /adj */ flirtatious (usually of men).
بصبوص *baṣbuuṣ*' /n pl *baṣabiiṣ*/ (male) flirt.
مبصبصاتى *mibaṣbaṣaati* /n pl *-yya*/ flirt.
اتبصبص *ſitbaṣbaṣ* /vi/ **1** (impersonal) passive of *baṣbaṣ*. *ſana mif min illi b-yitbaṣbaṣ luhum* I'm not the type to put up with people making eyes at me. **2** to look around furtively. *maafi b-titbaṣbaṣ ɛala ſeeh* what are you sneaking around looking for? - ava/iva *mitbaṣbaṣ*.

ب ص ب ص [2]
بصبوص *baṣbuuṣ*[2] (also *baṣbuuṣ wilɛa*) /n pl *baṣabiiṣ*/ ember.
بصبوصة *baṣbuuṣa* = *baṣbuuṣ*.
بصبوصاية *baṣbuṣaaya* = *baṣbuuṣ*.

ب ص خ)
بصخة *baṣxa*[1] <Copt> /n pl *-aat*/ foot of a plough, to which the ploughshare is attached (see Pl.D, 21). - also *basxa*.
بصخة *baṣxa*[2] <Syr> /n/ *[Chr]* service held on each of the four days preceding Good Friday. - also *basxa*.

ب ص ر [1]
بصر *baṣar* /n/ vision, sight.
بصريّات *baṣariyyaat*↑ /pl n/ optics.
بصير *baṣiir* /adj */ **1** endowed with sight, sighted. *ſil-ɛeen baṣiira wil-yadd' qaṣiira [prov]* ≈ the spirit is willing but the flesh is weak. *ſil-ɣariib ſaɛma wa-law kaan baṣiir [prov]* ≈ a stranger is always to be excused his ignorance of foreign customs. **2** clear-sighted, discerning. — /n/ **3** Discerning One (epithet of God).
بصيرة *baṣiira: ſiſ-ſakwa l-ſahl il-baṣiira ɛeeb [prov]* complaint to the perspicacious is unseemly.
أبصر *ſabṣar* (also *ſaṣbar*) /part/ who knows?, one wonders. *ſabṣar raaḥu feen* one wonders where they have gone. *huwwa miſ gayy' ſilla bukra.* - *wi-ſabṣar (yiigi)* 'He's not coming before tomorrow.' 'Who knows (whether he'll come or not).' ‖ *wi-ſabṣar ſeeh* and what not, as in *firibna ſaay wi-qahwa w-ſabṣar ſeeh* we drank tea, coffee and what not. - *ſabṣar wi-m-adrik* so on and so forth, as in *yiquulu taɛaalu w-ſabṣar wi-m-adrik* they say 'come' and so on and so forth.
إبصار *ſibṣaar*↑ /n/ sight. ‖ *zugaag ſibṣaar* optical glass.
اتباصر *ſitbaaṣar* /vi/ to look around, search. *ſil-waaḥid laazim yitbaṣar-lu f-qirfeen ɛaſaan maṣariif il-madrasa* one has to get hold of some money for school expenses. - ava *mitbaaṣir*.

ب ص ر [2]
بصرة *baṣra* /n/ **1** an Egyptian game (known also as *koomi* and *ſil-waad yiquff*) played by two to four persons; cards are dealt in fours, jack and seven of diamonds take all, and single cards can be taken by their equivalents in other suits. — /pl *baṣaari, buṣar*/ **2** taking of a card by its equivalent in another suit in the game of *baṣra*, or the cards so taken. **3** gain swiftly snatched.
بصّر *baṣṣar* /vi/ **1** to take a card with its equivalent in another suit in the game of *baṣra*. **2** to land a profitable deal. - vn *tabṣiir*; ava *mibaṣṣar*.

ب ص ر [3] see ب ص ا ر : *buṣaara*

ب ص ص [1]
بصّ *baṣṣ (u)* /vi/ **1** to look. *buṣṣ-i-li* look at me! *baṣṣ' f-saɛt-u* he looked at his watch. *baṣṣeet fimaal wi-yimiin* I looked left and right. *ſil-ſooḍa di bi-tbuṣṣ" ɛala ſeeh* what does this room look out on? *ḫ-abuṣṣ" ɛaleek min il-balakoona* I'll watch you from the balcony. **2** /always followed by *laaqa*/ modal of (sudden) awareness. *baṣṣeet laqeet il-baab xabbaṭ* (suddenly) I heard a knock at the door. *baṣṣ' laaqa f-ſiid-u çirfeen ṭayyibiin* he realized that he had (accumulated) a good sum of

money. *kamaan sana ʃaw sanateen ḫa-tbúṣṣ' tlaaqi ʃibn-ak kibir wi-baqa raagil* after a year or'two you'll find your son has grown up and become a man. - vn *baṣṣ, baṣaṣaan*; ava *baaṣiṣ*.

¶ *baṣṣ' li-* (1) to consider, give consideration to. *buṣṣ' lil-mustaqbal* think about the future. *baṣṣeet li-nafs-i min guwwa ṣiɛibt[a] ɛala nafs-i* I had a good think about the condition I was in and felt sorry for myself. (2) to envy, strive to be like (s.o.). *dayman bi-ybúṣṣ' li-wlaad ɛamm-u* he' always envious of his cousins. *ʃilli ybuṣṣ' lin-naas yitɛab [prov]* emulating others (out of envy) wears you out.

بصّة *baṣṣa[1]* /inst n, pl *-aat*/ a glance, a look.

بصّاص *baṣṣaaṣ* /n * and pl *baṣṣaaṣa/ [obsol]* spy, snooper.

اتبصّص *ʃitbaṣṣaṣ* /vi/ **1** to look around furtively. *tilaqii dayman maaʃi yitbaṣṣaṣ* you always find him going along looking stealthily about him. **2** to search. *ruuḫ itbaṣṣaṣ ɛaleehum* go along and look for them!

ب ص ص [2]

بصّة *baṣṣa[2]* /n pl *-aat*/ ember of charcoal (especially as fuel for a water-pipe).

بصّاية *baṣṣaaya* /n pl *-aat*/ = *baṣṣa[2]*.

ب ص ط و م

بصطوم *baṣṭuum* <It *bastone*> /n/ wooden ornamental moulding along edges of a ceiling, in corners, on columns etc.

ب ص ل [1]

بصل *baṣal* /coll n/ **1** onion(s). *baṣal ʃaxḍar* spring onions. ‖*zaraɛ-u zarɛ' baṣal* (1) he caused him to fall. (2) he brought about his downfall. - *bi-yimʃi zarɛ' baṣal* ≈ he's dead drunk. - *yoom ɛasal wi-yoom baṣal* ≈ some days are good, some bad. - *baṣal bi-xamsa wi-b-xamsa baṣal* ≈ six of one and half-a-dozen of other. **2** (plant) bulb(s). **3** tuberose(s).

بصلة *baṣala* /unit n, pl *-aat*/ **1** an onion. ‖*ya daaxil been il-baṣala w-ɣifrit-ha ma-yfuḫ-ʃ' ɛaleek ʃilla ṣunanit-ha [prov]* (you who push your nose between the onion and its skin, all you'll get will be its nasty smell) ≈ keep your nose out of other people's business. - *baṣalit il-muḥibb' xaruuf [prov]* ≈ a posy from the beloved is a ruby. - *ma-yiswaa-ʃ baṣala* he' worthless. - *ɣaaṭi l-baṣala* put your head down! - *yiṣuum wi-yifṭar ɛala baṣala* see *ṣaam*. — /pl *ʃabṣaal/* **2** a plant bulb. **3** a tuberose.

بصلي *baṣali* /adj invar/ pale golden-brown in colour.

بصيلة *buṣeela↑* /n pl *-aat/ [anat]* bulb of the hair.

ب ص ل [2]

بوصلة *buṣla* <It *bussola*> /n pl *-aat, buṣal/* navigational compass.

ب ص م

بصم *baṣam (u)* /vt/ **1** to imprint, stamp. **2** to put one's finger-prints on (a document, in lieu of signing). *huwwa min illi b-yubṣumu* he's illiterate. ‖*baṣam bil-ɛaṣara* to be in complete agreement. - vn *baṣm*; ava *baaṣim*; pva *mabṣuum*.

بصمة *baṣma* <T *basma*> /n pl *-aat/* **1** impression (of a stamp, seal etc.). **2** finger-print.

بصمجي *baṣmagi* /n pl *-yya/* a yes-man.

اتبصم *ʃitbaṣam* /vi/ **1** to be imprinted or stamped. **2** to be marked with a finger-print (in lieu of a signature, of a document). - iva *mitbiṣim*.

ب ص و ن

بصون *baṣoon* <perh Fr> /n/ bassoon.

ب ص ي

باصة *baaṣa[1]* <Engl> /n pl-*aat/ [soccer]* pass.

باصى *baaṣa[2]* /vt/ *[soccer]* to pass (a ball). ‖*ḫ-abaaṣi z-zibuun da liik* I'll pass this customer on to you. - vn *mibaṣiyya*; ava/pva *mibaaṣi*.

اتباصى *ʃitbaaṣa* /vi/ *[soccer]* to be passed (of a ball). - iva *mitbaaṣi*.

ب ض ع [1]

بضاعة *biḍaaɛa* /coll n/ **1** goods, merchandise. *ɣaṭr' bḍaaɛa* goods train, freight train. *markib biḍaaɛa* freighter. *ḫusn is-suuq wala ḫusn il-biḍaaɛa [prov]* a good market is more profitable than having good merchandise. *biḍaaɛa win-naas gawaaɛa* (supplies when the people are hungry) fulfilment of a crying need. **2** (mental) resources. *biḍaɛt-u ɣlayyila* he has little information to offer (of a scholar). ‖*biḍaɛt-u xilṣit* he can't think of any more lying tales to tell.

بضايع *baḍaayiɛ* /pl n/ merchandise.

بضّع *baḍḍaɛ* **1** /vt/ to shop for. *nazla ɛala s-suuq ʃabaḍḍaɛ ʃiwayyit ḫagaat* I'm going down to the market to shop for a few things. — /vi/ **2** to go shopping. **3** to prosper. - vn *tabḍiiɛ*; ava *mibaḍḍaɛ*.

ب ض ع [2]

مبضع *mibḍaɛ↑* /n pl *mabaaḍiɛ/* scalpel, dissecting knife.

ب ط ا س
بوطاس *buṭaas, biṭaas* <Fr *potasse*> /n/ **1** potash. **2** lye. ‖*buṭaas ʃamrikaani* a stain remover made of lye. - also *butaas*.

ب ط ا ط ا
بطاطا *baṭaaṭa* <prob It *batata*> /coll n/ **1** sweet potato(es). **2** /unit n, pl *-aat*/ a sweet potato.
بطاطاية *baṭaṭaaya* /unit n, pl *-aat*/ a sweet potato.

ب ط ا ط س
بطاطس *baṭaaṭis* <poss T *patates* from Gr or It> /coll n/ potato(es).
بطاطسة *baṭaṭsa* /unit n, pl *-aat*/ a potato.
بطاطساية *baṭaṭsaaya* /unit n, pl *-aat*/ a potato.

ب ط ا ق
بطاقة *biṭaaqa* <prob Gr *pittakion*> /n pl *-aat, baṭaayiq*↓/ card. *biṭaaqa faxṣiyya* personal identity card. *biṭaaqit tamwiin* ration book. *biṭaaqa ntixabiyya* ballot paper.

ب ط ء
بطى *biṭi, biṭa*↓ *(i)* /vi/ to take (too) long. *ʃil-qaṭr*^{i} *biṭi* the train was long behind schedule. *biṭyu fiʃ-fuʏl* they were very late with the work. *daxalit il-beet biṭyit ʕalayya* she went into the house and left me waiting ages. - vn *baṭayaan*; ava *baaṭi*.
بطء *buṭʃ*↑ /n/ slowness, tardiness. *bi-buṭʃ* slowly.
بطيء *baṭiiʃ* /adj * and pl *buṭaʃa, buṭaaʃ*/ slow. ‖*ʃin-naql il-baṭiiʃ* unmotorized transport.
بطّى *baṭṭa*^{1} /vt/ to cause to take too long or be too slow. *miʃ ʕaarif ʃeeh illi baṭṭaa barra* I don't know what kept him out so long. - ava *mibaṭṭi*.
اتبطّى *ʃitbaṭṭa* /vi/ to be delayed. - iva *mitbaṭṭi*.
استبطى *ʃistabṭa* /vt/ to consider slow. *ʃistabṭu ʃaxuu-hum xaragu ynaduu* they thought they had waited too long for their brother so they went out to call him. - vn *ʃistibṭa*; ava *mistabṭi*.

ب ط ب ط^{1}
بطبط *baṭbaṭ*^{1} **1** /vt/ to flatten, squash. *ʃil-qaṭr*^{i} *miʃi ʕal-musmaar baṭbaṭ-u* the train ran over the nail and squashed it flat. **2** /vi/ to become fat and flabby. - vn *baṭbaṭa*; ava/pva *mibaṭbaṭ*.
اتبطبط *ʃitbaṭbaṭ* /vi/ **1** to become fat and flabby. *ʃitbaṭbaṭit fil-ʕizz* she has grown fat from living a life of ease. **2** to be flattened. - ava *mitbaṭbaṭ*.

ب ط ب ط^{2}
بطبط *baṭbaṭ*^{2} /vt. and vi/ to splash about (in shallow water). *baṭbaṭ riglee fil-mayya* he kicked about in the water. - also *balbaṭ*. - vn *baṭbaṭa*; ava/pva *mibaṭbaṭ*.

ب ط ح
بطح *baṭaḥ (a)* /vt/ to inflict a wound on (s.o., especially on the head or other bony part of the body). *rukbit-i mabṭuuḥa* my knee is grazed. *baṭaḥ nafuux il-ḥakam* he gashed the referee's head. ‖*ma-ḥadd*^{i} *baṭaḥ-ni ʏeer iz-zaman wi-ʕyaal-i* ≈ I'd be a happy man but for the way life and my children treat me. - vn *baṭḥ*; ava *baaṭiḥ*; pva *mabṭuuḥ*.
بطحة *baṭḥa* /n pl *-aat*/ **1** /inst n/ a wound, a graze (especially on the head or other bony part of the body). *ʃilli ʕala raas-u baṭḥa yḥassis ʕaleeha [prov]* (he who has a head wound keeps feeling it) ≈ a guilty person will always give himself away. ‖*baṭḥit if-fams* sunstroke. **2** *baṭḥit raas* poll.
بطحجى *baṭaḥgi* /n pl *-yya*/ bully, thug.
اتبطح *ʃitbaṭaḥ* /vi/ to be wounded or grazed (of, or on, the head or other bony part of the body). - iva *mitbiṭiḥ*.
انبطح *ʃinbaṭaḥ* = *ʃitbaṭaḥ*. - iva *minbiṭiḥ*.
بطّح *baṭṭaḥ* **1** /vt/ to attack viciously. **2** /vi/ to get out of control. - vn *tabṭiiḥ*; ava *mibaṭṭaḥ*.

ب ط خ
بطّيخ *baṭṭiix* /coll n/ water-melon(s). *yiqrab il-ʃarḍ*^{i} *yṭallaʕ baṭṭiix* ≈ he can perform miracles.
بطّيخة *baṭṭiixa* /n pl *-aat*/ **1** /unit n/ a water-melon. ‖*baṭṭiixa qarʕa* a water-melon the flesh of which is white and tasteless. - *ʒayy il-baṭṭiixa l-maqfuula* a matter of luck. - *ḥuṭṭ*^{i} *f-baṭn-ak baṭṭiixa ṣeefi [prov]* (put a summer melon in your belly) ≈ relax, don't worry about a thing. - *bargal baṭṭiixa* external calipers. **2** pommel (of a saddle). **3** hub of a cart-wheel.

ب ط ر^{1}
بطران *baṭraan* /n */ one who is arrogantly ungrateful. *ʃil-baṭraan nadmaan [prov]* one who has an arrogantly ungrateful attitude towards God's gifts will live to regret it (because they will be withdrawn).
بطر *baṭar* /n/ arrogant and wasteful attitude towards gifts or blessings.
اتبطّر *ʃitbaṭṭar* /vi/ to be ungrateful to the point of ridiculing gifts. - ava *mitbaṭṭar*.

ب ط ر^{2}
بيطار *biṭaar* /n pl *bayaṭra*/ **1** *[obsol]* farrier. **2** veterinarian.
بيطرى *biṭari* /adj */ veterinary. *ṭibb*^{i} *biṭari* veterinary medicine. *duktuur biṭari* veterinary surgeon.

ب ط ر [3] see ب ط ط ر ى : *baṭṭariyya*

ب ط ر [4] see ء م ب ر - : *ʔabaṭra*

ب ط ر خ [1]
بطارخ *baṭaarix* /n/ cured salted roe of the grey mullet, botargo.
بطروخ *baṭruux* /n, pl *baṭariix*/ roe (of any type of fish).
بطرخ *baṭrax* /vi/ to be swollen (with, or as if with, roe). *baɛd' ma ʃtaɣal fiṭ-ṭigaara maḥfaẓṭ-u baṭraxit* after he worked in commerce, his wallet bulged. - vn *baṭraxa*; ava *mibaṭrax*.

ب ط ر خ [2] see ب ط ر ك : *baṭraxaana*

ب ط ر س
بطرس *buṭrus* male given name. *buṭrus ir-rasuul* the Apostle Peter
البطرسيّه *ʔil-buṭrusiyya* (also *ʔil-kiniisa l-buṭrusiyya*) /n/ Coptic Orthodox church in Abbasiya.

ب ط ر ش -
بطرسيل *baṭarfiil* <Gr *epitrakhêlios*> /n/ *[Chr]* stole (of a priest).

ب ط ر ك
بطرك *baṭrak* <Gr *patriarkhês*> /n pl *baṭarka*/ *[Chr]* patriarch.
بطركيّة *baṭrakiyya* /n/ *[Chr]* patriarchate. - also *baṭriyakiyya, baṭriyarkiyya*.
بطركخانه، بطرخانه *baṭraxaana* <prob T *patrikẖane*> /n/ *[Chr]* patriarchate.

ب ط ر م -
بطرمان *baṭramaan* <*Martaban* (in Burma)> /n pl *-aat, -aat*/ glass or plastic jar with lid, jam jar. - also *barṭamaan*.
بطرمانة *baṭramaana* = *baṭramaan*. - also *baṭramaana*.

ب ط ر ي ك
بطريكيّة *baṭriyakiyya* /n/ *[Chr]* patriarchate. - also *baṭrakiyya, baṭriyakiyya*.

ب ط ر ي -
بطريركيّة *baṭriyarkiyya* <Gr *patriarkheio*> /n/ *[Chr]* patriarchate. - also *baṭrakiyya, baṭriyakiyya*.

ب ط س [1] see ب ا ط س . *baaṭis*

ب ط س [2] see ب ط و س : *baṭuus*

ب ط س ت
باتيسته *baṭista* <It> /n/ cambric, batiste.

ب ط ش [1]
بطس *baṭaf[1] (u)* **1** /vt/ to strike, smash. *ʔiṭ-ṭuuba baṭaʃit manaxiir-u* the stone struck his nose. **2** /vi/ to collide. *kaan maaʃi fiḍ-ḍalma ɋaam baṭaf fil-ẖeeṭa* he was walking in the dark when he collided with the wall. - vn *baṭaʃaan*; ava *baaṭiʃ*; pva *mabṭuuf*.
مبطوش *mabṭuuf* /adj/ squashed-looking. *manaxiir mabṭuuʃa* broad flat nose.
اتبطش *ʔitbaṭaf[1]* /vi/ **1** to crash, collide. *wiɋiɛ itbaṭaf fil-ʔarḍ* he fell crashing to the ground. **2** to be stuck, be smashed. - ava/iva *mitbiṭiʃ*.
بطّش *baṭṭaf[1]* /vi/ to thrash about, strike out wildly. *ʔahu yinzil yibaṭṭaf fil-mayya w-xalaaṣ* well, he goes into the water and just splashes about a bit. - vn *tabṭiif*; ava *mibaṭṭaf*.

ب ط ش [2]
بطس *baṭaf[2] (u)* /vt and vi/ to stain. *ʔil-buuya baṭaʃit (ɛala) hiduum-i* the paint stained my clothes. - vn *baṭaʃaan*; ava *baaṭiʃ*; pva *mabṭuuf*.
بطسة *buṭʃa* /n pl *buṭaf*/ stain, imprint.
اتبطس *ʔitbaṭaf[2]* /vi/ to be stained. - iva *mitbiṭiʃ*.
بطّس *baṭṭaf[2]* /vi/ to become streaky (of coloured cloth). - *tabṭiiʃ*; ava *mitbaṭṭaf*.

ب ط ش [3]
بطّش *baṭṭaf[3]* /vi/ to lose shape, become flabby. *ʔil-gizam bitaaɛit il-ʔayyam-di ʃahr' waaḥid wi-tbaṭṭaf* shoes these days lose their shape after a month. - vn *tabṭiif*; ava *mibaṭṭaf*.

ب ط ش [4]
بطس *baṭʃ* /n/ veal.
بوطسة *buṭʃa* /n pl *buṭaf*/ barrel.

ب ط ط [1]
بطّ *baṭṭ[1] (u)* /vt/ **1** to flatten out. *xudi l-ɛagiina di buṭṭiiha* take this piece of dough and flatten it. **2** to push (s.o.) into a sitting position. *ruḥt' baṭṭ-u ɛal-kursi* I shoved him down onto the chair. **3** to cause a setback to (s.o.). *rabb-i-na baṭṭ-u* ≈ he failed to get what he wanted. - vn *baṭṭ, baṭaṭaan*; ava *baaṭiṭ*; pva *mabṭuuṭ*.
اتبطّ *ʔitbaṭṭ* /vi/ **1** to be or become flattened out. **2** to take a tumble. **3** to plump down into a sitting position. - ava/iva *mitbaṭṭ*.
انبطّ *ʔinbaṭṭ* = *ʔitbaṭṭ*. - ava/iva *minbaṭṭ*.
بطّط *baṭṭaṭ* /vt/ to flatten out (thoroughly, or with a

number of movements, or a number of things). *ʔil-qaṭr^{i} baṭṭaṭ-u* the train squashed him flat. ‖*sagaayir mibaṭṭaṭa* oval cigarettes. -*samak mibaṭṭaṭ* flatfish. -vn *tabṭiiṭ*; ava/pva *mibaṭṭaṭ*.

تبطيطة *tabṭiiṭa* /n/ instance noun of *tabṭiiṭ*.

اتبطّط *ʔitbaṭṭaṭ* /vi/ to be flattened, be flattened out. -iva *mitbaṭṭaṭ*.

ب ط ط [2]

بطّ *baṭṭ*[2] /coll n/ duck(s). ‖*ʔilli kalt-u wizz^{i} wizz^{i} ḥa-tfuxx-u baṭṭ^{i} baṭṭ [prov]* ≈ what you enjoy (to excess) today you will suffer for, or pay for, tomorrow.

بطّة *baṭṭa*[2] /n pl *-aat*/ **1** /unit n/ a duck. ‖*ʔakl-ik mineen ya baṭṭa* ≈ (it looks so good) I don't know where to start. **2** plump and pretty girl. **3a** affectionate form of address ≈ dear. **3b** nickname for *faṭma*.

بطّاية *baṭṭaaya* /unit n, pl *-aat*/ a duck.

ب ط ط [3]

بطّ *buṭṭ* <Engl> /n pl *-aat*/ small sailing boat.

ب ط ط ر ي

بطّارية *baṭṭariyya* <It *batteria*> /n pl *-aat*/ **1** *[elec]* battery. **2** torch, flashlight. **3** *[mil]* battery (of artillery). **4** array, assemblage (of machinery).

ب ط ق see ب ط ا ق : *biṭaaqa*

ب ط ل [1]

بطل *baṭal^{i}↑ (a)* /vi/ to be annulled, become void or invalid. *ʔitkallim fa-ṣalaat-u baṭalit [Isl]* he spoke (while praying) and so his prayer became invalid. *ʔil-beeɛ baaṭil* the transaction is not valid. -vn *buṭlaan*; ava *baaṭil*.

بطل *biṭil (a)* /vi/ **1** to become exhausted. *ʔid-dawa da mafɛuul-u biṭil* this medicine has become ineffective. *miʃ ɛarfa leeh il-ʔayyam-di baqeet ʔabṭal bi-surɛa* I don't know why I get tired so quickly these days. **2** to go out of fashion, become obsolete. *ʔil-mooḍa di biṭlit min zamaan* this fashion has been out of date for a long time. **3** to become void or invalid. -vn *baṭal, baṭalaan*; ava *baṭlaan, baaṭil*.

باطل *baaṭil* /n/ falsehood, deception, that which is not valid. *ʔil-baaṭil ma-luu-ʃ rigleen [prov]* falsehood has no leg(s) to stand on. *ḥa-ydafɛu ɛannu bil-baaṭil* they will put up a false defence for him. *ʔimsik il-baaṭil ɛala ma ygii-lak il-ḥaqq [prov]* fight for more than your right and you will end up by getting what is rightfully yours. ‖*bi-ynaahid fil-baaṭil* (or *bil-baaṭil*) ≈ he is fighting a lost battle. -*ma-ɛrift^{i}-ʃ ʔaaxud maɛaaha ḥaqq^{i} wala baaṭil* I couldn't get anywhere with her no matter what method I tried. -*ɛaaṭil ɛala baaṭil* ≈ incessantly and to no purpose. -*ʔil-ɛaaṭil fil-baaṭil* ≈ all and sundry, without discrimination, as in *ga l-buliiṣ xad-hum ɛaṭil-hum fi-baṭil-hum* the police came and took them all in.

الباطليّة *ʔil-baṭliyya*↓ /prop n/ populous area in Cairo between the Citadel and el-Azhar, known for its trade in drugs and hashish. -also *ʔil-baṭniyya*.

بطالة *biṭaala* /n/ **1** idleness, inactivity, unemployment. *faydit ʔayyaam il-biṭaala n-noom [prov]* (the benefit of days of idleness is sleep) the only relief when times are bad is sleep. **2** day off, day of leisure.

بطّال *baṭṭaal* /adj */ **1a** idle. *ʔil-ʔiid il-baṭṭaala nigsa [prov]* the idle hand is unclean. *ʔiɛmil bi-xamsa w-ḥaasib il-baṭṭaal [prov]* (work for five (piastres) and ask the idle man how much he has earned) no matter how little you earn, it will still be more than the idle man earns. ‖*ɛammaal ɛala baṭṭaal* incessantly and to no purpose, as in *ʔikkallim ɛammaal ɛala baṭṭaal* he kept up a steady stream of pointless nonsense. **1b** *[agric]* fallow. *ʔin-naḥya l-baṭṭaala* the unplanted side (of a field, furrow). **2** bad, wicked, depraved. *raagil baṭṭaal* a bad man. -/adverbially/ *miʃi baṭṭaal* he behaved badly. ‖*baḥr^{i} baṭṭaal* a choppy sea. -*ʔibɛid-na ɛan kull^{i} baṭṭaal* keep us from all evil.

¶ *miʃ baṭṭaal* not bad, tolerably good. *ʔil-imtiḥaan ma-kan-ʃ^{i} baṭṭaal* the exam wasn't bad. *ʔizzayy^{i} ṣiḥḥit-ak. - miʃ baṭṭaala* 'How's your health?' 'Not bad.'

بطّل *baṭṭal* /vt/ **1** to put a stop to, render inactive. *baṭṭal il-mutoor* switch off the engine! **2** to put an end to, give up. *miʃ ḥa-tbaṭṭali mnaqra* won't you stop quarrelling? *baṭṭalt it-tadxiin min sana* I stopped smoking a year ago. ‖*baṭṭaluu-da wi-smaɛuu-da* ≈ whatever next! the things that go on! — /vi/ **3** to stop, become inactive. *ɛafaan il-ɛarabiyya ma-tbaṭṭal-ʃ^{i} minni* so that the car won't pack up on me. -vn *tabṭiil*; ava/pva *mibaṭṭal*.

¶ *baṭṭal ɛala* to supplant, supersede. *ḥ-aftaḥ-lu maḥall^{i} ybaṭṭal ɛalee* I'll open a shop that will put him out of business.

ب ط ل [2]

بطل *baṭal*[2] /n pl *ʔabṭaal*/ **1** hero. ‖*ʔil-baṭal ir-rumaani* epithet of St. George (*maari girgis*). **2** champion. **3** principal character (in a story, film etc.). *baṭal il-film* the star of the film. — /adj/ **4** courageous, brave.

بطلة *baṭala* /n pl *-aat*/ heroine.

بطولة *buṭuula* /n/ **1** heroism. *ʔil-buṭuula fil-ḥarb^{i} b-tixtilif min ʔinsaan li-ʔaaxar* heroism in war differs from one man to the next. — /pl *-aat*/ **2** act of heroism. *ʔil-muraasil il-ḥarbi miʃ bass^{i} ysaggil il-buṭulaat* the war

correspondent does not only record heroic deeds. **3** championship. *bi-yaxdu fluus gawaayiz fil-buṭulaat* they get prize money in the championships. **4** leading role, starring part (in a play, film etc.).

ب ط م

بطمة *baṭama* /n/ *[obsol]* stage in shoemaking entailing the stitching of a reinforcing strip of leather to the upper before it is sewn to the sole.

ب ط ن

بطن *baṭn* /fem n, pl *biṭuun, buṭuun*/ **1** abdomen, abdominal region or any specific part thereof. *baṭn-i b-tiwgaɛ-ni* I have stomach-ache. *saaɛit il-biṭuun tituuh il-ɛuqquul [prov]* when it's time to eat, minds wander. *hamm-ak ɛala baṭn-ak* you think only of your belly. *ḥassit bi-ḥarakit ig-ganiin fi-baṭn-a-ha* she felt the baby moving inside her. *naamu ɛala laḥm' baṭn-u-hum* they went to bed hungry. ‖*baṭn-i maʃya* (1) my bowels are moving. (2) I have diarrhoea. -*xallaa-ha baṭn' ḥmaar* he went to excess. -*baṭn-i karkibit* my heart sank. -*baṭn-u wasɛa* he's unscrupulous. **2a** young brought forth at a (single) birth. *dool mawludiin fi-baṭn' waḥda* those are twins (or triplets etc.). *baɛd' wlaadit ʃawwil baṭn* after the birth of the first child. **2b** crop yield. *bi-naaxud baṭneen min il-barsiim wi-baɛdeen nizraɛ il-ɢamḥ* we get a double crop of clover before we plant the wheat. **3** inner or innermost part. *fi-baṭn il-ɢumaaʃ* right inside the material. ‖*baṭn il-ʃiid* palm of the hand. -*baṭn ir-rigl* or *baṭn il-ɢadam* sole of the foot. -*baṭn il-waadi* the bottom of the valley. -*baṭn il-baḥr* low gradient of the river embankment.

بطنيّة *baṭniyya* /n/ **1** inner face. **2** *[arch]* underside (e.g., of an arch).

بطني *biṭani* /adj */ gluttonous.

بطانة *biṭaana* or *buṭaana* /n pl *-aat, baṭaayin*/ **1** lining (of a garment). **2** undercoat (of paint etc.). **3** *[mus]* (back-up) chorus. **4** *[naut]* shelf (for cargo).

بطيني *biṭeeni* /n pl *biṭeniyya*/ glutton.

بطّانيّة *baṭṭaniyya* /n pl *baṭaṭiin, baṭaniyyaat*/ blanket. *ɣurzit il-baṭṭaniyya [needlew]* blanket-stitch.

باطن *baaṭin* /n/ **1** /pl *bawaaṭin*/ inside, inner part. *ɛilm il-baaṭin* knowledge of the esoteric. *ɛaliim bi-bawaaṭin il-ʃumuur* informed about the intricacies of affairs. -/adjectivally/ *ʃil-ɛaql il-baaṭin* the subconscious. **2** /no pl/ Undiscernable One (epithet of God).

¶ *min il-baaṭin [comm]*: *miqawla min il-baaṭin* subcontracting. *taskiin mil-baaṭin* subletting.

باطني *baaṭini* /adj */ **1** internal. *ṭibb' baaṭini* internal medicine. *duktoor baaṭini* physician. **2** esoteric.

الباطنيّة *ʃil-baṭniyya* /prop n/ populous area in Cairo between the Citadel and el-Azhar, known for its trade in drugs and hashish. -also *ʃil-baṭliyya*↓.

بطّن *baṭṭan* /vt/ **1** to line, pad. *baṭṭanit il-fustaan* she lined the dress. **2** to give an undercoat of paint to. -vn *tabṭiin*; ava/pva *mibaṭṭan*.

اتبطّن *ʃitbaṭṭan* /vi/ passive of *baṭṭan*. -iva *mitbaṭṭan*.

ب ط ن س

بطنسة *baṭansa* or *baṭunsa* /n pl *baṭaanis*/ *[naut]* half-deck (fore or aft) of a sailing boat.

ب ط و س

بطوس *baṭuus* /n/ *[naut]* wide timber running round the top of the gunwale of a Nile sailing boat (on which the boatman can walk).

ب ط ى see ب ط ء : *biṭi*

ب ظ ب ظ

بظبظ *baẓbaẓ* /vi/ **1** to exude, issue, ooze out. *mif ḥ-addi-huu-lak lamma ɛeen-ak tibaẓbaẓ* I won't give it to you even if your eye drops out. **2** to shake with fright. -vn *baẓbaẓa*; ava *mibaẓbaẓ*.

ب ظ ر

بظر *baẓr* /n pl *buẓuur*/ *[anat]* clitoris.

ب ظ ر م -

بظرميط *baẓramiiṭ* /adj invar/ **1** of mixed blood, mongrel. **2** chaotic, topsy-turvy. -also *baẓramiiṭ*.

ب ظ ظ

بظّ *baẓẓ (u)* /vi/ **1** to ooze, squirt out. *dust[a] ɛaṣ-ṣurṣaar raaḥit maṣariin-u baẓẓa min guwwaa* I stepped on the cockroach and out squirted its insides. **2** to bulge, start (of the eyes). *ɛeen-i baẓẓit lamma ʃuft-a-ha* I went popeyed when I saw her. -vn *baẓẓ, baẓaẓaan*; ava *baaẓiẓ*.

بظاظة *baẓaaẓa: baẓẓ' baẓaaẓa* to project very much, as in *ɛeen-u baẓẓit baẓaaẓa* his eyes popped out of his head.

بظّظ *baẓẓaẓ* /vt/ **1** to cause to squirt out. **2** to cause (the eyes) to bulge or start. *ʃis-sukr' baẓẓaẓ ɛenay-ya* drunkenness made my eyes bulge. -vn *tabẓiiẓ*; ava/pva *mibaẓẓaẓ*.

اتبظّظ *ʃitbaẓẓaẓ* /vi/ passive of *baẓẓaẓ*. -iva *mitbaẓẓaẓ*.

ب ظ م

بظّم *baẓẓam* /vi/ to wear a mournful expression. *ɢaaɛid mibaẓẓam wala lli daafin* he's sitting looking as miser-

able as if he'd just buried a close relation. - vn *tabʒiim*; ava *mibaʒʒam*.
تبظيمة *tabʒiima* /inst n, pl *-aat*/ a mournful expression. *ʕalee ħittit diin tabʒiimà* he really looks very gloomy.

ب ع ب ص
بعبص *baʕbaṣ* /vt/ **1** to goose, poke between the buttocks with a finger. ‖*ma-tuqʕud-ʃ*^{i} *tbaʕbaṣ fil-ʃakl [coarse]* keep your fingers out of the food! **2** *[coarse]* to put one over on (s.o.), play a dirty trick on (s.o.). - vn *baʕbaṣa*; ava/pva *mibaʕbaṣ*.
بعبوص *baʕbuuṣ* /n pl *baʕabiiṣ*/ **1** act of goosing. *ʃilli yimʃi wara l-ʕiyaal yistaahil il-baʕabiiṣ* ≈ he who takes the advice of children deserves to be treated like a child. **2** *[slang]* protrusion, little bump. ‖*da-nta ħittit baʕbuuṣ ma-tsawii-ʃ ħaaga* you're just a worthless little squirt. **3** *[coarse]* dirty trick. *miʃ kifaaya l-baʕbuuṣ illi-ddahlak* isn't that rotten trick he played on you enough?
بعبوصة *baʕbuuṣa* = *baʕbuuṣ*.
اتبعبص *ʃitbaʕbaṣ* /vi/ passive of *baʕbaṣ*. - iva *mitbaʕbaṣ*.

[1] ب ع ب ع
بعبع *baʕbaʕ* /vi/ **1** to grunt or bellow discontentedly (of camels). **2a** to give vent to one's feelings. **2b** to complain vociferously. - vn *baʕbaʕa*; ava *mibaʕbaʕ*.
بعبعة *baʕbaʕa* /n/ **1** grunt of a camel. **2** loud protestation, angry bluster.

[2] ب ع ب ع
بعبع *buʕbuʕ* <perh Copt> /n pl *baʕabiiʕ, baʕaabiʕ*/ bogeyman. *ma-ṭuxrug-ʃ*^{i} *bil-leel laħsan il-buʕbuʕ yiṭlaʕ-lak* don't go out at night or the bogeyman will get you! *ʃakl-a-ha zayy il-buʕbuʕ* ≈ she's as ugly as a witch.

ب ع ت
بعت، بعث *baʕat (a)* /vt/ **1** to send. *lissa ma-baʕatt*^{i}*-ʃ ig-gawaab* I haven't sent the letter yet. *ʃibʕat-lina ʃumm-u* send his mother to us. — /vi/ **2** to send provision. *ʃiftaval barra w-baqa mabsuuṭ wi-kaan dayman bi-yibʕat li-ʃahl-u* he got a job abroad and became quite wealthy and used always to remit to his family. *rabb-i-na yibʕat* may God provide. **3** /preverb/ to send word (to do s.th.) *baʕatuu-li ʔaluu-li l-xabar* they sent me the news. *ʃibʕat haat il-biira* send out for the beer! *baʕatu ygiibu t-tamargi* they sent someone to bring the nurse. - vn *baʕataan*; ava *baaʕit*; pva *mabʕuut*.
¶ *baʕat li-* to send for (s.o.). *lamma laqa faqqa kbiira baʕat li-miraat-u* when he found a large flat he sent for his wife. *kaanit ʃumm-u ʕayyaana fa-baʕatuu-lu* his mother was ill so they sent for him.
باعث *baaʕit* /n/ Provider (epithet of God).
مبعوث *mabʕuus* /n */ delegate, envoy.
بعث *baʕs* /n/ resurrection. ‖*ħizb il-baʕs [pol]* Renaissance Party (in Syria, Iraq and Lebanon).
بعثة *biʕsa* /n pl *-aat*/ mission, delegation. *biʕsa diblumasiyya* diplomatic mission.
اتبعث، اتبعت *ʃitbaʕat* /vi/ to be sent. - iva *mitbiʕit*.
انبعث، انبعت *ʃinbaʕat* = *ʃitbaʕat*. - iva *minbiʕit*.
انبعث *ʃinbaʕasˀ* /vi/ to arise, stem. *daragit ħaraara ʕalya munbaʕisa min it-tafaaʕul* a high temperature arising from the reaction. - vn *ʃinbiʕaas*; ava *munbaʕis*.

ب ع ت ر
بعثر، بعتر *baʕtar* /vt/ to scatter (about). *ma-tbaʕtar-ʃ il-filuus* don't throw money around! ‖*ħ-abaʕtar karamt-ak* I'll strip you of your dignity, I'll humiliate you. - vn *baʕtara*; ava/pva *mibaʕtar*.
اتبعثر، اتبعتر *ʃitbaʕtar* /vi/ to be scattered (about). - iva *mitbaʕtar*.

ب ع ت ر -
بعتران *baʕatraan* /n/ *[bot]* name given to species of Artemisia and Achillea.

ب ع ث see ب ع ت

ب ع ث ر see ب ع ت ر

ب ع ج
بعج *baʕag (i)* /vt/ **1** to make elliptical. **2** to make baggy. - vn *baʕagaan, baʕg*; ava *baaʕig*; pva *mabʕuug*.
منبعج *munbaʕigˀ* /adj/ elliptical.
اتبعج *ʃitbaʕag* /vi/ passive of *baʕag*. - iva *mitbiʕig*.

ب ع ج ر
بعجر *baʕgar*[1] /vi/ to become fat and shapeless. *ʃil-wiliyya tixnit wi-baʕgarit kida* the woman grew fat and flabby. - vn *baʕgara*; ava *mibaʕgar*.
بعجر *baʕgar*[2] /n/ nickname used to tease or mock one who is plump or clumsy.
اتبعجر *ʃitbaʕgar* /vi/ to become fat and shapeless. *balaaʃ il-xiyaara l-mitbaʕgara di* don't give me this bulbous cucumber. - ava *mitbaʕgar*.

ب ع د
بعد *biʕid*[1] *(a)* /vi/ to be or become distant. *ʃil-filuus wi-ṣaaħib il-filuus ma-yibʕaduu-ʃ ʕaleek* neither the money nor the owner of the money is ever out of reach for you (i.e. they are at your command). *maṣr*^{i}

ma-tibʕad-ʃ' ʕala ḥabiib [prov] (Cairo is never inaccessible to those who love her) nothing is out of reach to those who desire it strongly enough. *nuqaṭ il-maṭaafi b-tibʕad masafaat ṭiwiila ʕan baʕḍ-a-ha* the fire-stations are very remote from one another. - vn *buʕd.*

بعد *biʕid*[2] *(i)* /vi/ to stay away, remove oneself. *ʃibʕid ʕan in-naas dool* keep away from those people! *b-afaḍḍal ʃabʕid ʕan wagaʕ id-dimaaɣ* I like to keep clear of bothersome matters. *ʃibʕid ʕan if-farr' w-ɣannii-lu [prov]* keep your distance from trouble and deal with it diplomatically. - vn *buʕd.*

بعد *baʕad (i)* /vt/ **1** to take away, remove. *ʃibʕid il-laban ʕan in-naar* take the milk off the stove! *ḥaawil yibʕid ik-koora ʕan ig-goon* he tried to get the ball away from the goal. **2** to keep away. *ʕawza tibʕidii-ni ʕan il-ḥubb* do you want to keep me from love? *rabb-i-na yibʕid ʕannak wilaad il-ḥaraam* may God keep evil people from you! (used prophylactically after reference to a misfortune). - vn *baʕadaan*; ava *baaʕid*; pva *mabʕuud.*

بعد *buʕd* /n/ **1** /vn/ ‖*da buʕd-(u)* it is beyond (his) reach, it is impossible for (him), as in *ʕaawiz taaxud il-filuus - da buʕd-ak* you want to take the money? that'll be the day! - *il-buʕd' gafa* remoteness hardens one's feelings. - *buʕd' naẓar* farsightedness, foresight. **2** /no pl/ distance. *ʕala buʕd' talaata kiilu* at a distance of three kilometres. — /pl *ʃabʕaad/* **3** dimension, aspect. *ʃil-buʕd ir-raabiʕ* the fourth dimension. *rasm' sulaasi l-ʃabʕaad* isometric projection. *kull' ʃabʕaad il-ḥukm* all the aspects of the verdict. **4** *[mus]* interval. أبعاديّة *ʃabʕadiyya* /n pl *-aat/ [obsol]* large agricultural estate. ‖*hiyya f-ʃirka tibqa ʃabʕadiyyit ʃabuu-k* is the company yours by exclusive right? (i.e. you behave as if the company were your father's estate).

بعد *baʕd* /prep, w foll pron suff also *baʕdii-/* after. *ḥa-tkuun fil-beet baʕd is-saaʕa tamanya* will you be at home after eight o'clock? *nazzil-ni ʕan-naṣya di ʃilli baʕd' maḥaṭṭit il-ʃutubiis* drop me at that corner after the bus stop. *baʕd' kida ṭṭallaq-ha wi-ngawwiz-ak ʃaḥsan minḥa* after that you divorce her and we'll marry you to someone better. *hiyya daxalit baʕdiikum* (or *baʕd' minkum*) she went in after you. *baʕd' bukra* the day after tomorrow. *baʕd' baʕd' bukra* the third day from today. ‖... *min baʕd(-u)* ... now that (he) has departed! (in expressions of mourning), as in *niʕmil ʃeeh mın baʕdak* whatever shall we do now you're gone! - *la qabl(-u) wala baʕd(-u)* the like of it has never been seen before, nor ever will be again, as in *saakin fi-beet la qablu wala baʕdu* he is living in a wonderful house, *muṣiiba la qablaha muṣiiba wala baʕdaha muṣiiba* an unparalleled disaster.

¶ *baʕd' ma* /conj/ after. *baqeet ʃamnaʕ-ha mil-xuruug baʕd' ma ggawwizna* I began to forbid her going out after we were married.

بعدين *baʕdeen* /adv/ **1** afterwards, then. *ḥ-akkallim ʕanha baʕdeen* I'll talk about it later. *wi-baʕdeen ʕamalti ʃeeh* and then what did you do? ‖*wi-baʕdeen* (1) whatever is to be done? as in *miʃ ḥa-yilḥaq yiqra l-kitaab qabl il-imtiḥaan. - ṭab wi-baʕdeen* 'He won't manage to read the book before the exam.' 'Well what's he going to do then?' (2) (also *wi-baʕdeen maʕa-, wi-baʕdeen wayya-*) whatever next, whatever will (he) get up to next, whatever is the matter with (him), as in *wi-baʕdeen (maʕaak) ya walad - kifaaya ʕabaṭ baqa* that's quite enough from you, boy - no more fooling now! *wi-baʕdeen (maʕaakum) - ma-gibtuu-ʃ id-duktoor leeh* whyever didn't you get the doctor! (3) (also *wi-baʕdeen yaʕni*) so ...? as in, *kaan kull' sana yiṭlaʕ il-ʃawwil ʕala l-faṣl. - wi-baʕdeen. - wala qableen bass' b-addii-k fikra* 'He used to be top of the class every year?' 'So ...?' 'Nothing at all; I'm just giving you an idea.' **2** too, as well. *goz-ha wiḥiʃ wi-ʃawlad-ha mutʕibiin wi-baʕdeen ṣiḥḥit-ha taʕbaana* her husband is a bad lot, her children are tiresome and on top of all that she's in poor health.

بعد *biʕd: biʕd iʃ-ʃarr* ≈ God forbid, perish the thought (used prophylactically at mention or suggestion of misfortune), as in *ʃana xayfa ykuun - biʕd iʃ-ʃarr (ʕalee) - ḥaṣal-lu ḥaaga* I'm afraid that something, God forbid, may have happened to him.

بعيد *biʕiid* /adj pl *buʕaad, buʕada/* **1** distant, far. *fataḥ maktab fi-ḥitta bʕiida* he opened an office in a remote place. *biʕiid ʕan il-ʕeen biʕiid ʕan il-qalb [prov]* out of sight, out of mind. *min zaman biʕiid* long since. ‖*raagil biʕiid in-naẓar* or *raagil naẓar-u bʕiid* a far-sighted man. - *ya bʕiid* insulting form of address, in which mention of the name of the person addressed is deliberately avoided. - *ʃil-biʕiid* form of reference to one who is absent and is the object of censure, intended to show that no aspersions are cast on anyone present. - *biʕiid ʕan-* prophylactic phrase accompanying mention of something undesirable ≈ may such a thing be far from you! as in *ḥalit-na baqit zift - biʕiid ʕannak* we have fallen on evil times, may the like of them never come upon you! - *biʕiid ʕan ʃanab-ak* ≈ it's quite beyond you, you'll never manage (to have or do something). **2** unlikely. *biʕiid yikuun rawwaḥ badri* it is unlikely that he would have gone home early. *miʃ biʕiid tismaʕ*

sirr' gdiid it's not improbable that you'll hear a new secret. || *ʃabah biʕiid* a hardly-perceptible likeness. – /adv/ **3** far, far away. *ʃuft-u min biʕiid* I saw him from afar. *ʃig-gawabaat bi-tiigi bʕiid ʕan baʕḍ-a-ha* the letters come spaced far apart. ||*ḥa-nruuḥ biʕiid leeh* why should we go so far (in looking for examples and precedents, when there are plenty close at hand)? *min biʕiid li-bʕiid* (1) from a distance, remotely, as in *beeni w-beenu ʕaraaba min biʕiid li-biʕiid* he and I are distantly related. (2) discreetly, from a discreet distance, as in *ʃisʃal ʕalee min biʕiid li-bʕiid* make discreet enquiries about him.

أبعد *ʃabʕad'* /el/ **1** more/most distant or unlikely. **2** *ʃil-ʃabʕad* form of reference to one who is absent and is the object of censure (or to one present but ignored) ≈ the unmentionable you-know-who.

بعّد *baʕʕad* **1** /vt/ to remove. **2** /vi/ to remove oneself, go far away. *baʕʕadu tibqu ʕasal ʕarrabu tibqu baṣal* ≈ familiarity breeds contempt. - vn *tabʕiid*; ava *mibaʕʕad*.

اتباعد *ʃitbaaʕid* /vi/ to steer away, keep clear. *kull' ma nqarrab-lu yitbaaʕid ʕanna w-ʕan maʃakil-na* whenever we make friendly approaches to him, he steers away from us and our problems. - vn *tabaaʕud*↑; ava *mitbaaʕid*.

أبعد *ʃabʕad²* /vt/ to remove, exclude, eliminate. *ʃabʕaduu ʕan if-ʃirka* they removed him from the company. - vn *ʃibʕaad*; ava *mubʕid*; pva *mubʕad*.

استبعد *ʃistabʕad, ʃistabʕid* /vt; the literary passive *ʃustubʕid* also occurs/ **1** to consider (too) far. *bi-tistabʕid il-mifwaar min hina li-skindiriyya* do you think the journey from here to Alexandria is (too) far? **2** to reject as unsuitable, unlikely or untenable. *ʃil-xubara bi-yistabʕidu n-naẓariyya di* the experts discount this theory. *ʃil-mawḍuuʕ da stubʕid* this topic has been rejected. **3** to select for remoteness. *ʃistabʕad-lak ḥitta ʕan iṭ-ṭariiq ʃibni fiiha* find yourself a plot of land to build on well away from the road. - vn *ʃistibʕaad*; ava *mistabʕid*; pva *mustabʕad*.

ب ع ر

بعر *baʕr* /coll n/ dung (specifically of sheep, goats and camels).

بعرة *baʕra* /unit n, pl *-aat*/ piece of dung (of a sheep, goat or camel). ||*baʕra wi-yqaawiḥ it-tayyaar [prov]* (he's only) a turd, and yet he goes against the current (said of a low person who sets himself up against his betters).

بعّر *baʕʕar* /vi/ to dung, defecate (of sheep, goats and camels). - vn *tabʕiir*; ava *mibaʕʕar*.

ب ع ر ر

بعرور *baʕruur* /n pl *baʕariir*/ **1** young camel. **2** insignificant person.

بعرورة *baʕruura* /n pl *-aat*/ young female camel.

ب ع ز ق

بعزق *baʕzaq'* /vt/ to scatter. *kidb' msaawi wala sudq' mbaʕzaq [prov]* consistent lying is more credible than garbled truth. *ʃil-ʕumr' miʃ baʕzaqa [prov]* life is not a squandering (matter). ||*ḥ-abaʕzaq karamt-ak* I'll strip you of your dignity, I'll humiliate you. - vn *baʕzaqa*; ava/pva *mibaʕzaq*.

بعزق *baʕzaq²* /n/ term of reference to a ridiculous person.

ب ع س see ب ع ت: *mabʕuus, baʕs, biʕsa, ʃinbaʕas*

ب ع ض ¹

بعض *baʕḍ* /n, w pron suff often *baʕḍii-*/ **1a** some, part of, a few, a number of. *kaan ʕandu baʕḍ il-ʃamal fiʃ-ʃifa* he had some hope of recovery. *baʕḍ il-ʃawqaat niḥibb' ninzil naakul barra* sometimes we like to go and eat out. *baʕḍ in-naas yḥibbu yṣayyifu fi-skindiriyya wil-baʕḍ it-taani ma-yḥibbuu-ʃ yisiibu l-qaahira* some people like to spend the summer in Alexandria but others do not like to leave Cairo. **1b** /in constr with indef n/ a little of, a touch of. *simiʕt' baʕḍ' kalaam* I heard a little gossip. **2a** one another, each other. *qablu baʕḍ' fin-naadi* they met one another in the club. *ḥuṭṭ il-kutub ʕala baʕḍ(-a-ha) fir-rukn* stack the books on top of one another in the corner. *ʃurbuṭ il-ḥibaal fi-baʕḍ(-a-ha)* tie the ropes together. *ma-tiskunuu-ʃ maʕa baʕḍ(-ii-ku) leeh* why don't you share accommodation? *ḥuṭṭ iʃ-ʃanṭiteen guwwa baʕḍ* put the two cases inside one another. *ʃil-ʔamiṣeen zayy' baʕḍ* the two shirts are like each other. *xallii-hum biʕiid ʕan baʕḍ(-u-hum)* keep them apart (away from each other). *ʃil-ʕarabiyyiteen daxalu f-baʕḍ* the two cars ran into each other. ||*fi-(raqabit) baʕḍ* together as an average, as in *xud fiwayyit il-manga dool fi-(raqabit) baʕḍ* take this heap of mangoes as one lot (where the extra good quality of one would compensate for the lower quality of another), *ʃana ḥ-abiʕ-lak il-beteen fi-(raqabit) baʕḍ' b-xamsiin ʃalf' gneeh il-waaḥid* I will sell you the two houses together in one deal at fifty thousand pounds each (as if the two houses were exactly alike, which they are not). - *ʃin-naas li-baʕḍ(-a-ha)* people are meant to help one another (said, e.g., by someone who is being thanked for offering his help). **2b** (him)self, (her)self,

etc. *ʕiṣ-ṣafiiḥa daxalit fi-baʕḍ-a-ha* the tin was crushed or pressed together (lit: went into itself). *waḥda ʕaguuza w-karkuuba wi-mkaʕbara kida f-baʕḍ-a-ha* an old woman all stumpy and gnarled. ‖*zayy' baʕḍ-u* O.K., it makes no difference, it's all the same to me, as in *tiḥibb' timʃi dilwaqti.* - *zayy' baʕḍ-u* 'Do you want to go now?' 'All right.' *huwwa lissa ma-katab-ʃ il-gawaab.* - *zayy' baʕḍ-u* 'He still hasn't written the letter.' 'Never mind.' - *zayy' baʕḍ(-u) [euphem]* bad, awful, as in *ʕil-waaḥid bi-yizhaq mil-ʕiiʃa lli zayy' baʕḍ-a-ha di* one gets fed up with this terrible life, *ya nhaar zayy' baʕḍ-u* how awful! good grief! - *ʕaxad baʕḍ(-u) wi-* to up and (do s.th.), make a move to (do s.th.), as in *xud baʕḍ-ak wi-ṭlaʕ dawwar ʕal-waad* shake a leg and go and look for the boy!

¶ *ʕala baʕḍ-* /adv/ (1) (of a divisible whole) together, unseparated, (as) one lot. *ʕiddii-ni ḥittit laḥma tneen kiilu ʕala baʕḍ-a-ha* give me two kilos of meat in one piece. *ḥittit ig-gibna di ʕala baʕḍ-a-ha tiṭlaʕ qadd' ʕeeh* what is the weight of this whole piece of cheese? *ʕid-dunya kida ʕala baʕḍ-a-ha ma-tiswaa-ʃ fardit gazma* this life (as opposed to the life hereafter) altogether is not worth anything. (2) (of a person) in a composed position. *ʕuqʕud ʕala baʕḍ-ak ya wala* sit properly, boy! *baqeet qaaʕid miʃ ʕala baʕḍ-i mil-qalaq* I was sitting restless with worry. (3) (of a place, of a crowd) tightly crowded, tightly packed together. *ʕil-ʕutubiis baqa ʕala baʕḍ-u* the bus has become crammed with people. *ʕin-naas ʕala baʕḍ-a-ha fil-maḥaṭṭa* people are jammed together in the station.

ب ع ض ²

بعوض *baʕuuḍˀ* /coll n/ gnat(s).

بعوضة *baʕuuḍaˀ* /unit n, pl *-aat*/ a gnat.

ب ع ض ش ى

بعضشى *baʕḍiʃi* /n/ **1** tiny amount. *baʕḍiʃi malḥ* a sprinkling of salt. **2** Tiny (given prophylactically as a boy's name by mothers whose children have died, in order to ward off the evil eye). **3** scornful form of address to a man.

ب ع ك ك

بعكك *baʕkik* /vt/ to confuse, muddle up, mess up. - vn *baʕkaka*; ava/pva *mibaʕkik*.

بعكوكة *baʕkuuka* /n pl *baʕakiik*/ affectionate form of reference to any old contraption (especially a car, ship, bicycle etc.). *ʕil-baʕkuuka wiqfit minni* the old jalopy conked out on me.

اتبعكك *ʕitbaʕkik* /vi/ to be confused, be muddled up. - iva *mitbaʕkik*.

(ب ع ل)

بعل *baʕl* /n pl *buʕuul, buʕuula*/ husband, used especially in lamentation by a woman whose husband has died.

بعلى *baʕli* /adj/ not irrigated during the later stages of growth (especially of *fuul*, garlic and onions).

بعل *biʕl* /n/ *[deris]* pot belly of a heavy eater. *ʕabu biʕl* glutton.

ب ع و و

بعوّ *baʕaww* /n/ fabulous beast characterized by fatness and ugliness, bogeyman, troll.

بعوّة *baʕawwa* /n/ troll-woman.

ب غ ا ز

بوغاز *buɣaaz* <T *boğaz*> /n pl *bawaɣiiz, buɣazaat*/ **1** strait. *markib buɣaaz* lightship. **2** harbour mouth, (and hence also) breakwater. *baab il-buɣaaz* the harbour entrance.

ب غ ا ش

بغاشة *buɣaaʃa* <T *poğaça*> /coll n/ sweetmeat made of flaky pastry and cut into diamond shapes.

بغاشاية *buɣaʃaaya* /unit n, pl *buɣaʃaat*/ a piece of *buɣaaʃa*.

ب غ ء see ب غ ى : *baɣaaʔ*

ب غ ب غ

بغبغان *baɣbaɣaan* /n pl *-aat*/ parrot. *bi-yikkallim zayy il-baɣbaɣaan* he talks non-stop. - also *babbaɣaan*.

بغبغ *baɣbaɣ* /vi/ to babble, talk unintelligibly or nonsensically. - vn *baɣbaɣa*; aya *mibaɣbaɣ*.

ب غ ت ¹

بغتة *baɣta* /n/ surprise. *ʕala baɣta* by surprise, all of a sudden. - /adverbially/ *ʃiliʕ ʕaleena baɣta* he took us by surprise.

باغت *baaɣit* /vt/ to take by surprise, come upon by surprise. *nibaaɣit il-ʕaduw* we surprise the enemy. - vn *mibaɣta*; ava *mibaaɣit*.

اتباغت *ʕitbaaɣit* /vi/ to be surprised, be taken by surprise. - iva *mitbaaɣit*.

ب غ ت ²

بغيتة، بغيتة *biɣiita, baɣiita* /coll n/ small seeds found as impurities in rice, grain etc.

مبغّت *mibayyat* /adj/ full of *biyiita*.
اتبغّت *ʕitbayyat* /vi/ to be adulterated, be mixed with impurities. -iva *mitbayyat*.

ب غ ث see ² ب غ ت

ب غ د د
بغداد *buɣdaad, baɣdaad* /prop n/ Baghdad.
بغدادى *buɣdaadi, baɣdaadi* /adj */ pertaining to Baghdad. ‖*ɧinna buɣdaadi* type of fine-quality henna that yields a dark dye. -*ɧaadi baadi siidi mɧammad il-buɣdaadi* first part of a counting rhyme used by children ≈ eenie-meenie-mynie-mo.
بغدادلى *buɣdadli* /n/ **1** wooden piece half an inch by one inch. **2** lath work.
اتبغدد *ʕitbaɣdid* /vi/ **1** to act aloofly or disdainfully. *bi-titbaɣdid ɛan-naas kida leeh* why do you look down on people so? **2** to enjoy life to the full, live opulently. *naas bituuɛ baɣdada* people who enjoy the good life. -vn *baɣdada*; ava *mitbaɣdid*.

ب غ ز see ب غ ا ز : *buɣaaz*

ب غ ش see ب غ ا ش : *buɣaaʃa, buɣaʃaaya*

ب غ ض
بغض *buɣḍ* /n/ hatred.
أبغض *ʕabɣaḍ: ʕabɣaḍ il-ɧalaal ɛand allaah iṭ-ṭalaaq* the most odious of what God permits is divorce.
مبغوض *mabɣuuḍ* /adj */ hated.

ب غ ل
بغل *bayl* /n pl *biɣaal*/ **1** mule. *ɧadd' yquul il-bayl' fiʕ-ʕabriiq* ≈ would anyone say anything so stupid? *qaalu lil-bayl' miin ʕabuu-k qaal xaal-i l-ɧuṣaan [prov]* when they asked the mule who his father was he told them his uncle was the horse ≈ everyone likes to show himself in the most favourable light. *taxxan widn il-bayl' b-qoolit fii* flatter a mule by addressing him as if he were a horse ≈ flatter gullible people by letting them think you have a high opinion of them. *ʕagsaam biɣaal wi-ɛuquul ɛaṣafiir* (those people are) all brawn and no brain. ‖*bayl usturaali* a stupid oaf. **2** pier (of a bridge).
بغلة *bayla* /n pl *-aat*/ **1** she-mule. *wallid il-bayla* ≈ he did the impossible. **2** pier (of a bridge).
بغالى *bayyaali* /adj invar/ pertaining to mules. *ɛarabiyyaat bayyaali* mule-drawn carts.
بغّل *bayyal* /vi/ to become clumsy and stupid. -vn *tabyiil*; ava *mibayyil*.

استبغل *ʕistabyal* **1** /vt/ to consider stupid. **2** /vi/ to become mulish, behave stubbornly. -vn *ʕistibyaal*; ava/pva *mistabyal*.

ب غ و
بغو *bayw* /adj invar/ *[rur]* unripe, not mature (of fruit, vegetables etc.).

ب غ ى
بغاء *biɣaaʔˁ* or *baɣaaʔˁ* /n/ prostitution.

ب ف ت
بفتة *bafta* <P *bâfta*> /n/ calico. ‖*sumɛa beeḍa zayy il-bafta* a spotless reputation.

ب ف ت ت
بفتّة *bafitta, bavittaˁ* <It *bavetta*> /n pl *-aat*/ (child's) bib or feeder.

ب ف ت ى ك
بفتيك *bufteek, bifteek* <Fr *bifteck*> /n/ beaten steak cooked by frying.

ب ف ر
بفرة *bafra* <obsolete brand name> /coll n/ cigarette paper(s).

¹ ب ف ف
بفّة *baffa* /n pl *-aat, bufaf*/ pair (in dice).

² ب ف ف
بفّ *buff* <Fr *pouf*> /n pl *-aat, bufuuf*/ pouffe, large leather cushion or hassock stuffed and used as a low seat.
بفّة *buffa* = *buff*.

ب ف ن ت
بوفنت *bufant* <Fr> /adj invar/ puffed out, bouffant.

ب ف ى ه
بوفيه *bufeeh* <Fr> /n pl *-aat*/ **1** canteen, snack bar. **2** buffet-style meal. **3** buffet, sideboard.

ب ق ب ش
بقبش *baqbiʃ* **1** /vt/ to cause to blister. **2** /vi/ to blister. -vn *baqbaʃa*; ava/pva *mibaqbiʃ*.
بقبيشة *buqbeeʃa* /n pl *baqabiiʃ, buqbeʃaat*/ blister.

ب ق ب ق
بقبق *baqbaq* **1** /vt/ to cause to blister. **2** /vi/ to blister.

ʃafayf-i baqbaqit min iʃ-ʃaṭṭa my lips blistered from the red pepper. - vn *baqbaqa*; ava/pva *mibaqbaq*.
بقبيقه *buqbeeqa* /n pl *baqabiiq, buqbeqaat*/ blister.
اتبقبق *ʔitbaqbaq* /vi/ to become blistered. - ava *mitbaqbaq*.

ب ق ج
بفجه *buqga* <T *bokça*> /n pl *buqag, buqgaat*/ **1** cloth bundle tied with a knot. **2** *[carp]* (any type of) hinge in which the two leaves are riveted together round a central pivot. **3** *[constr]* patch of plaster put on a wall to regulate the depth of stucco or other facing that is to be applied. **4a** square section in tent appliqué design (see Pl.H, 5). **4b** motif in tent appliqué design (see Pl.H, 13).
بفّج *baqqag* /vi/ *[constr]* to put patches of plaster on a wall to regulate the depth of stucco or other facing. - vn *tabqiig*; ava *mibaqqag*.

ب ق د و -
بقدونس *baqduunis* (also *maqduunis*) /n/ parsley.

ب ق ر
بقر *baqar* /coll n/ cattle (other than buffalo).
بقرة *baqara* /n pl *-aat*/ cow. *ʔin wiqʕit il-baqara tiktar sakakin-ha [prov]* (if the cow falls, the knives abound) ≈ everyone is against the unfortunate.
بقرى *baqari* /adj invar/ pertaining to bovines other than buffalo. *laḥma baqari* beef other than buffalo meat. *laban baqari* cow's milk.

ب ق ر و ر
بقرور *baqruur* <Copt> /n/ frog.

ب ق س
بقس *baqs* /n/ box tree, boxwood.

ب ق س م -
بقسماط *buqsumaaṭ* <Gr *paksimadi*> /coll n/ **1** bread slices hardened by rebaking, rusks, breadsticks. **2** (dried) bread-crumbs.

ب ق ش ش
بقشيش *baqʃiiʃ* <P *bakhshîsh*> /n/ tip. *ʔeeh raʔy-ak fil-wahba wil-baqʃiiʃ* what do you think about gratuities and tips?
بقشش *baqʃiʃ* /vi/ to disburse money in a condescending manner. - vn *baqʃaʃa*; ava *mibaqʃiʃ*.

ب ق ط see ب ق و ط : *baquuṭi*

ب ق ع [1]
بقعة *buqʕa* /n pl *buqaʕ, buqʕaat*/ **1a** stain, spot. *muziil lil-buqaʕ* spot remover. **1b** spot (as a plant disease). **2** (also *buqʕa*) location, spot. *ʔil-beet fi-buqʕa mumtaaza* the house is in an excellent spot.
بقّع *baqqaʕ* **1** /vt/ to spot, stain, blotch. *ʔiz-zeet baqqaʕ il-qamiiṣ* the oil stained the shirt. **2** /vi/ to stain or be stained, blotch or be blotched. *ʔil-qamiiṣ baqqaʕ* the shirt stained. - vn *tabqiiʕ*; ava/iva *mibaqqaʕ*.
اتبقّع *ʔitbaqqaʕ* /vi/ to be or become stained or blotched. - vn *tabaqquʕ*↑; ava *mitbaqqaʕ*.
تبقّع *tabaqquʕ* /n/ spot (as a plant disease).

ب ق ع [2]
بقع *buqaʕ: ʃuqaʕ buqaʕ (ya rabb' yuqaʕ) [children]* ≈ hope he falls! (chanted when someone is attempting a difficult climb).

ب ق ف
بقف *baqf* <perh Copt> /n pl *buqúfa*/ lummox, oaf. -/adjectivally/ *ʔamma raagil baqf' ṣaḥiiḥ* what a real oaf of a man!

ب ق ق [1]
بقّ *buqq* <cf Lat *bucca*> /n/ **1a** mouth. *ḥuṭṭ-u f-buqq-ak* put it in your mouth. *huwwa b-buqq-u ṭalab il-filuus* he asked for the money himself. *ʔil-buqq il-maqfuul ma-yxuff'-huu-ʃ id-dibbaan [prov]* (flies do not enter a closed mouth) keep your mouth shut and all will be well. *buqq-a-ha bi-ynaqqaṭ ʕasal* she has a honeyed tongue. *ʔil-marabba ṭiʕit zayy is-sukkar tistaahil buqq-ak* the jam turned out to be delicious - really worth eating. ‖*yislam buqq-ak* ≈ well said! - *buqq is-sabʕ* snapdragon, antirrhinum. **1b** mouthful. *ḫ-akl-u ʕala buqq' waaḥid* I'll eat it up in one mouthful. *ʔiddii-ni buqq* give me a mouthful. **2** opening, aperture. *buqq iʃ-ʃalta* the opening of the cushion.
بقّيقى *buqqeeqi* /adj/ oral, verbal. -/adverbially/ *qul-haa-lu buqqeeqi kida* just give him the message orally.

ب ق ق [2]
بقّ *baqq' (u)* /vt/ to cause to split open or burst. *daas ʕak-koora baqq-a-ha* he trod on the ball and burst it. - vn *baqq, baqaqaan*; ava *baaqiq*; pva *mabquuq*.
بقّة *baqqa'* /pl *-aat*/ instance noun of *baqq*.
اتبقّ *ʔitbaqq* /vi/ passive of *baqq'*. - iva *mitbaqq*.
انبقّ *ʔinbaqq* = *ʔitbaqq*. - iva *minbaqq*.

ب ق ق[3]

بقّ *baqq*[2] /coll n/ **1** bedbug(s). ‖*damm-u zayy il-baqq* ≈ he's a drag. **2** any of a variety of plant pests.

بقّة *baqqa*[2] /unit n, pl *-aat*/ a bedbug. *zayy il-baqqa tiwlid miyya w-tquul ya qillit il-xalaf [prov]* like the bedbug, which gives birth to a hundred and says, 'How few!' ≈ the unworthy breed too much.

ب ق ل

بقالة *biqaala* /n pl *-aat*/ **1** grocery trade. *(maḥall[i]) biqaala* grocery shop. **2** groceries.

بقول *buquul* /pl n/ legumes.

بقولي *buquuli* /adj/ leguminous.

بقّال *baqqaal* /n */ grocer.

بقّل *baqqal* /vi/ to soften (after soaking in water) and be about to sprout (of legumes). - vn *tabqiil*; ava *mibaqqal*.

ب ق ل ا و

بقلاوة *baqlaawa* <T *baklava*> /n/ confection made of filo pastry with syrup and nuts. ‖*looḥ baqlaawa* or *ṣaaga baqlaawa* cross-hatched steel plate, anti-slip plate.

ب ق ل ط

بقلط *baqlaṭ* /vi/ to become plump or chubby. - vn *baqlaṭa*; ava *mibaqlaṭ*.

ب ق ل ظ

بقلظ *baqlaẓ*[1] /vi/ to become chubby. - vn *baqlaẓa*; ava *mibaqlaẓ*.

بقلظ *baqlaẓ*[2] /n/ *[deris]* plump person.

بقلوظ *baqluuẓ* /adj pl *baqaliiẓ*/ chubby.

ب ق ل ل

بقلولة *baqluula* <perh Copt> /n pl *baqaliil, baqlulaat*/ bubble, blister.

بقلل *baqlil* /vi/ **1** to become bloated, puff up. *ʕeen-u baqlilit* his eye became puffy. **2** to gurgle (of a container of liquid). **3** to bubble, effervesce. - vn *baqlala*; ava *mibaqlil*.

بقليله *buqleela* /n pl *baqaliil, buqlelaat*/ bubble, blister.

ب ق و ط

بقوطى *baquuṭi* <Copt> /n/ tin dish or small basket into which vegetables are placed as they are selected for purchase.

ب ق ى

بقى *baqa*[1] *(a)* /vi/ **1** to be. *da yibqa gooz-ik* is that your husband? *ma-tibqaa-f magnuun* don't be crazy! *kaan dayman bi-yibqa zaʕlaan* he was always annoyed. *ʃik-kalam-da yibqa ʃeeh* what kind of talk is that? *ʃis-sitt[i] di tibqaa-lak ʃeeh* how is this woman related to you? *kull[i] ma yibqa l-qumaaf rixiiṣ kull[i] ma tibqa fital-u ʃaqall* the cheaper the cloth, the looser the weave. **2a** to become. *ḥa-yibqa duktoor ʃin ʃaaʃ allaah* God willing he'll become a doctor. *xud id-dawa w-ḥa-tibqa kwayyis* take the medicine and you'll get well. *baqeet ʕala l-ḥadiida* I became penniless. **2b** /w neg/ to be (no longer). *ma-baqit-ʃ[i] ṣṛayyara* she is no longer young. *ma-baqaa-ʃ ʕandu muxx* he no longer has any sense. **3** to arrive, attain (at or to a place, time or condition). *miʃ ḥ-atkallim li-ḥadd[i] ma nibqa f-maṣr* I shan't speak till we reach Cairo. *ʃis-saaʕa baqit talaata* or *baqeena s-saaʕa talaata* it's three o'clock now. *baqa fig-gamʕa* he has joined the university. *baqit fi-muʃkila* she got involved in a problem – /impersonally/ **4a** there has elapsed. *baqaa-li saaʕa b-axabbaṭ ʕal-baab* I've been pounding on the door for an hour. *baqa-lha mʕaaya talat siniin* she has been with me for three years. *ma-baqa-luu-ʃ diqiqteen hina* he's hardly been here two minutes. **4b** there has accumulated or accrued. *bi-kida yibqaa-lak ʕandi ʕafara gneeh* that makes ten pounds I owe you. *baqa ʕandina fluus kitiir* we accumulated a lot of money. – /preverb/ **5a** to begin to. *baṭn-i baʃit tiwgaʕ-ni* my stomach started hurting. *baʕd ig-gawaaz baqeet ʃamnaʕ-ha min il-xuruug* after we got married I did not allow her to go out. *dilwaqti bass[i] baqit tiigi kull[i] yoom* only now has she started coming every day. **5b** /w neg/ to be (no longer) engaged in or accustomed to (doing s.th.). *ma-baqaa-ʃ yizur-na xalaaṣ* he has stopped visiting us. *ma-baqet-ʃ aḥibb-ak* I don't like you any more! **6** to arrive at the point of (doing s.th.). *lamma tibqi tlaaqi raagil (ʃibqi) ʃitgawwizii* when you find a man, marry him! **7** modal of constant or repeated action. *lamma kunt[i] fil-mustaffa baqit tiigi tzur-ni kull[i] yoom* when I was in hospital she visited me every day. *baqeet ʃanaadi w-humma miʃ samʕin-ni* I called and called but they didn't hear me. **8** modal of decision or emphasis. *ḥ-abqa ʃaxṭaf rigl-i w-ʃazuur-u* I'll go and pay him a quick visit then. *ʃibqi taʕaali (ʕandina) ʃwayya* do come around (to our house) for a while! *nibqa ttafaqna* we've agreed then! *yibqa yirḍii-k ik-kalam-da* then you're happy about what was said? *baqa xalaaṣ* well then, that's that! - /impersonally/ *yibqa ttafaqna* we've agreed then!

بقى *biqi (a)* /vi/ **1** to stay, remain. *biqyu ʕandina l-ḥadd iṣ-ṣubḥ* they stayed with us till morning. **2** /impers/ there remained, there was left over. *biqii-lu ʃahreen*

fif-fuvl he had another two months of work to go. *baaqi ɛaleekum talaata gneeh* you still owe three pounds. - ava *baaqi*.

باقي *baaqi* **1** /ava/ ‖ *ʃahu da lli kaan baaqi* that's all I need! that's the limit! - *baqyaa-lak* (it's waiting for you) I'll get you for that! - *ɦayaat-ak il-baqya* ≈ may your life be long (response to *ʃil-baqiyya f-ɦayaat-ak*). — /n/ **2** /pl *baqyiin, bawaaqi*; always def/ the rest, the others, the remainder. *baɛd-u-hum qaɛad ɛal-ʃarḍ' wil-baqyiin wiqfu* (or *wil-baaqi wiqif*) some of them sat on the ground and the rest stood. *xud kitaab waaɦid wi-siib il-baqyiin* (or *il-baaqi*) take one book and leave the others. *xud ɦisaab-ak wi-haat il-baaqi* take what you're owed and give me the change. *ɛuqbaal il-bawaaqi* ≈ may the rest of us (or you, or them) be as fortunate (a good wish on a happy occasion, or bitter remark on a unhappy one). **3** /no pl/ Everlasting One (epithet of God).

بقى، بأه *baqa*[2] /part/ **1** so, then, now. *ruuɦu baqa* go, then! very well, go! *ʃana ɦ-aɛallim-ak baqa* I'll teach you then! *ʃixtifi baqa* that's enough now! **2** however, on the other hand. *ʃana ʃafaḍḍal il-qism il-ʃadabi - wald-i baqa ɛayiz-ni ʃaxuff iṭ-ṭibb* I prefer the arts side, but my father wants me to go into medicine.

بقى *baqi: ɛumr if-faqi baqi [prov]* the life of the scamp lasts longest.

أبقى *ʃabqa* /el/ more/most lasting. ‖*wil-ɦayy' ʃabqa mil-mayyit* ≈ the living deserve more consideration than the dead. - *ʃaxuu-k ʃabqaa-lak* ≈ your brother is your most constant friend (injunction to show greater consideration for one's brother than for any friend).

بقاء *baqaaʃ* /n/ survival. ‖*ʃil-baqaaʃ li-llaah* only God is eternal (expression of condolence to one bereaved).

بقيّة *baqiyya* /n, constr *baqiit* and *baqiyyit*, pl *bawaaqi*/ remainder, rest. *laazim baqiit il-ɛidda titvisil* the rest of the equipment must be washed. ‖*baqiit il-ʃiid* tip, informal commission. - *ʃil-baqiyya f-ɦayaat-ak* expression of condolence ≈ the deceased will continue to live through you!

بقّى *baqqa*[3] /vt/ to cause to remain. *kalit wi-baqqit fiwayyit ʃakl' l-axuu-ha* she ate and left some food for her brother. - vn *tabqiyya*; ava *mibaqqi*.

اتبقّى *ʃitbaqqa* /vi/ there remained. *ʃitbaqqa ɛalayya talaata gneeh* I still owed three pounds. - ava *mutabaqqi*↑, *mitbaqqi*.

يبقى *yibqi* /imperf v/ to cause to remain, preserve (of God). *rabb-i-na yibqi ɦayaat-ak* may our Lord preserve you! - ava *mibqi*.

¶ *yibqi ɛala* to spare, let be. ‖*ma b-yibqii-ʃ ɛala ɦadd* he spares no-one with his words.

استبقى *ʃistabqa* /vt/ to cause to stay. *yimkin yistabquu-ni fwayya baɛd' sinn il-maɛaaf* perhaps they will keep me on for a while after retirement age. - vn *ʃistibqa*; ava *mistabqi*.

استبقّى *ʃistibaqqa*↓ /vi/ there remained. *dafaɛt' gneeh wi-stibaqqa ɛalayya xamsiin qirf* I paid one pound and was left owing fifty piastres. - ava *mistibaqqi*.

ب ك see ب ى ه : *bakawiyya*

ب ك ا ر

بكار *bikaar* <perh P *pargâr*> /n pl *-aat*/ circle, or arc, or anything (e.g., a strip of metal) formed into a circle or arc.

ب ك ا ش

بكاش *bikaaf* <Fr *picage*> /n/ act of pricking piano hammers to soften their felt.

ب ك ا ن

بكان *bikaan* <prob Engl> /coll n/ pecan nut(s).

ب ك ب ا -

بكباشي *bikbaafi, bakbaafi* <T *binbaşı*> /n pl *-yya/ [obsol]* army rank equivalent to lieutenant-colonel (replaced by rank of *muqaddam*). - also *bimbaafi*.

ب ك ب ب

بيكاب *bikabb*[1] <Engl *pick-up*> /n pl *-aat*/ pick-up truck.

بيكاب *bikabb*[2] <Fr *pick-up*> /n pl *-aat*/ record-player.

ب ك ب ر ت

بكابورت *bakaburt* <It *boccaporto*> /n pl *-aat*/ **1** manhole. **2** cesspit.

ب ك ب ك

بكبك *bakbik* /vi/ to bubble, effervesce. - vn *bakbaka*; ava *mibakbik*.

ب ك ت

بكّت *bakkit* /vt/ to censure, reprove, reproach. - vn *tabkiit*; ava/pva *mibakkit*.

اتبكّت *ʃitbakkit* /vi/ to be censured, be reproved, be reproached. - iva *mitbakkit*.

ب ك ت ت

بكتّة *bakitta*[1] <It *bacchetta*> /n pl *-aat*/ **1** action lever on a piano. **2** *[arch]* moulding.

بكتّة *bakitta*[2] <prob Engl> /n pl *-aat*/ packet.

ب ك ت ر ي
بكتريا *baktirya* <Engl> /n/ bacteria.

ب ك ت و -
بكتونى *bakatuuni* /n pl *-haat/ [elec]* fixture for downward slanting wall-lamp.

ب ك د ب -
بكادوبرا *bakadubra* <prob Engl> /n pl *-aat/ [theat]* backdrop.

ب ك ر [1]
بكرة *bakra* /n pl *-aat/* young she-camel.
بكرى *bakri: manfiyyit il-bakri* area in north-east Cairo.
البكريّة *ʃil-bakriyya* /prop n/ a Sufi order.
بكره *bukra* /adv/ **1** tomorrow. *ħa-tiigi n-nahar-da walla bukra* are you coming today or tomorrow? *baɛd[i] bukra* the day after tomorrow. *baɛd[i] baɛd[i] bukra* three days from now. *bukra nismaɛ wi-baɛdu nfuuf* ≈ we shall wait and see. ‖ *ʃin-nahar-da qabl[i] bukra* as soon as possible, better sooner than later. **2** some time (soon) in the future. *bukra faɛr-ak yiṭwal taani* your hair will grow again soon enough!
بكر *bikr* **1** /n pl *bakaari/* first-born child. *ɛuqbaal il-bakaari* ≈ we look forward to the birth of your children (said to a newly-married couple). **2** /adj/ **2a** /pl *bakaara* or invar/ virgin. *banaat bikr* or *banaat bakaara* virgins. *ʃarq[i] bikr* virgin soil. **2b** /invar/ unfertilized, unpollinated. ‖ *mayyit ṭurfi bikr* pickling solution containing salt and vinegar, but no spices.
بكرى *bikri* /adj */ first-born.
بكريّة *bikriyya* /n pl *-aat/* **1** one giving birth for the first time. **2** virgin.
بكارة *bakaara* /n/ **1** virginity. **2** maidenhead. *faḍḍ[i] bakarit-ha* he deflowered her.
أبكر *ʔabkar* /el/ more/most early.
بكور *bukuur* /n/ earliness, being early. *ʃil-baraka fil-bukuur* (God's blessing is in rising early) the early bird catches the worm.
بكور *bakuur* /coll n/ *[Chr]* first-fruit(s).
باكورة *bakuura* /n pl *-aat/* first-fruit, first result. *bakuurit ʃintaag il-maṣnaɛ kaanit muʃarrifa* the first products of the factory did it great credit. *yoom il-bakuura [Jud]* Shabuoth.
باكر *baakir* **1** /adv/ tomorrow. *ħa-niigi ṣabaaħ baakir* we'll come tomorrow morning. **2** (also *buxuur baakir*) /n/ *[Chr]* matins. *rafaɛ (buxuur) baakir* to say the service of matins (with its rituals, of a priest).

بكّر *bakkar* /vi/ **1** to be (ready) early in the morning. *laazim tibakkaru ʃiza kuntu ɛawziin tifuufu ʃuruuq if-ʃams* you'll have to be ready early if you want to see the sunrise. **2** to produce one's first child. *ħa-tbakkar bi-walad ʃin ʃaaʃ allaah* her first child will be a boy, God willing. - /vt/ **3** to blow old smoke out of (a water-pipe). - vn *tabkiir*; ava *mibakkar*.
اتبكّر *ʔitbakkar* /vi/ to be blown clear of old smoke (of a water-pipe). - iva *mitbakkar*.
ابتكر *ʔibtakar* /vt/ to invent, create, originate, innovate. - vn *ʔibtikaar*; ava *mibtikir*; pva *mubtakar*.
مبتكرات *mubtakaraat* /pl n/ fashions, creations. *mubtakaraat il-muusim* the season's fashions.

ب ك ر [2]
بكر *bakar* /coll n/ spool(s), reel(s), pulley(s), block(s). ‖ *xeeṭ bakar* (sewing) thread.
بكرة *bakara* /unit n, pl *-aat/* a spool, a reel, a pulley, a block.
بكّار *bakkaar = bakar.*
بكّارة *bakkaara = bakara.*

ب ك ر [3] see ب ك ا ر : *bikaar*

ب ك ر ب -
بيكربونات *bikarbunaat* <Fr> /n/ bicarbonate.

ب ك ر ج
بكرج *bakrag* <T *bakraç*> /n pl *bakaarig/* teapot.

ب ك ر ر
بكرر *bakrar* /vi/ **1** to swell (of the eyes). **2** to goggle (of, or with, the eye). *ma-tbakrar-lii-ʃ bi-ɛenee-k kida* don't goggle at me like that! - vn *bakrara*; ava *mibakrar*.

ب ك ر ى ك
بكريك *bikriik* <Fr>: *ħamḍ il-bikriik* picric acid.

ب ك س [1]
بكس *buks[1]* <Engl> /n/ **1** /pl *-aat, ʔabkaas, bikaas/* box, blow, punch. **2** /no pl/ (sport of) boxing. *taɛaala nilɛab buks* let's do a little sparring.
بكّس *bakkis* /vi/ to throw punches. *qaɛad yibakkis-lu lamma wiqiɛ min ṭuul-u* he kept on punching him until he fell flat. - vn *tabkiis*; ava *mibakkis*.
اتبكّس *ʔitbakkis* /vi/ to be punched. - iva *mitbakkis*.
باكس *baakis* /vt/ **1** to box. **2** to have a fist fight with. - vn *mibaksa*; ava *mibaakis*.
اتباكس *ʔitbaakis* /vi/ **1** to box each other. **2** to have a fist fight with each other. - ava *mitbaakis*.

² ب ك س
بكس، بوكس *buks*² <Engl> /n/ **1** (also *buks' furd*) police wagon for transporting prisoners, black Maria, paddy wagon. **2** (also *ɛarabiyya buks*) covered wagon. **3** (also *fanṭa buks*) vanity case or the like. **4** *[elec]* terminal box.

- ب ك س ت
باكستان *bakistaan* /prop n/ Pakistan.
باكستانى *bakistaani* **1**/n */ a Pakistani. **2** /adj/ Pakistani.

¹ ب ك ش
بكش *bakaʃ* /n/ trickery, bluffing.
بكّاش *bakkaaʃ* /n */ bluffer.
بكّش *bakkiʃ* /vi/ to act fraudulently, fool, bluff. *ma-tbakkiʃ-ʃ' ɛala ʃaxuu-k* don't take in your brother! - vn *tabkiiʃ*; ava *mibakkiʃ*.
مبكّساتى *mibakkaʃaati* /n pl *-yya*/ = *bakkaaʃ*.
اتبكّش *ʃitbakkiʃ* /vi/ (impersonal) passive of *bakkiʃ*. *mumkin yitbakkiʃ ɛaleek* you may be fooled. - iva *mitbakkiʃ*.

² ب ك ش
بكشة *bukʃa* <T *bokça*> /n pl *-aat*/ round water container of a *gooza* (see Pl.I, 10).

³ ب ك ش see ب ك ا ش : *bikaaʃ*

ب ك ش ر
بكشوريّة *bakʃuriyya* /n/ con game.

ب ك ش ى ن
بكاشين *bakaʃiin* <It *beccaccino*> /coll n/ snipe.
بكاسينة *bakaʃiina* /unit n, pl *-aat*/ a snipe.

¹ ب ك ك
بكّ *bakk (u)* **1** /vt/ to ooze, exude. *b-aḥuṭṭ' raaq miʃmiʃ wi-raaq sukkar w-asiib-u l-ḥadd' ma ybukk' mayyit-u* I put a layer of apricots and a layer of sugar and leave it till it produces juice. || *wiʃʃ-u ḥa-ybukk id-damm* his face is flushed. **2** /vi/ to flow. *ʕid-dimɛa bakkit min ɛeen-u* tears streamed from his eyes. - vn *bakk, bakakaan*; ava *baakik*; pva *mabkuuk*.
بكّة *bakka* /inst n, pl *-aat*/ a squirt, a drop.
اتبكّ *ʕitbakk* /vi/ to flow, be exuded. - ava/iva *mitbakk*.

² (ب ك ك)
بكّ *bukk* <prob Engl *pocket-book*> /n pl *-aat*/ small money purse.

بكّة *bikka* <It *becco*> /n pl *-aat, bukuuk*/ small nozzle, jet.

ب ك ل
بوكلة *bukla* <prob Fr *boucle*> /n pl *-aat, bukal*/ **1** lock (of hair), ringlet. **2** buckle.

ب ك ل ا ه
بكلاه *bakalaah* <It *baccalà*> /n/ dried and salted cod fish (eaten particularly during Lesser Bairam).

- ب ك ل ر
بكالوريا *bakalurya* <Fr *baccalauréat*> *[obsol]* secondary school diploma.
بكالوريس *bakaluriyuus, bakaluryoos* /n pl *-aat*/ bachelor's degree in science or commerce.

ب ك ل و
بكلو *bikalooh* <prob Fr> /n pl *-aat*/ piccolo.

ب ك ل ى س
بكوليس *bukuliis* <Fr *pied à coulisse*> /n pl *-aat*/ small-size Vernier caliper.

ب ك ل ى ه
بوكليه *bukleeh* <Fr *bouclé*> /adj invar/ curly (of hair).

¹ ب ك م
بكم *bukm* /n/ dumbness.
بكم *bakam* /n/ dumbness.
أبكم *ʔabkam* /adj, fem *bakma*, pl *bukm*/ dumb.

² ب ك م see ب ا ك م : *baakim*

ب ك ن see ب ك ا ن : *bikaan*

- ب ك ن ب
بكنبودر *bakinbawdar* or *bikinbawdar* <Engl> /n/ baking-powder.

¹ ب ك ى
بكى *baka (i)* /vi/ to weep, lament. *bakit bi-damɛ il-ɛeen* she cried her eyes out. *ʕiʃkii-li w-ʕana ʕabkii-lak* let's commiserate together. *kutr il-ḥuzn' yɛallim il-buka [prov]* much sadness teaches weeping. - vn *buka, bika*; ava *baaki*.
¶ *baka ɛala* to care for, as in *miʃ baaki ɛala ḥaaga* not giving a damn, *b-abki ɛala-bn-i wi-bn-i b-yibki ɛala l-ɣariib [prov]* I care for my son, but my son cares for the stranger (i.e. is ungrateful and fails to reciprocate),

ʃilli yibki ɛad-dinya ydawwar ɛaleeha [prov] he who cares about worldly things must look for them.
بكّاى *bakkaay* /adj */ given to weeping, always snivelling.
مبكى *mabka: ħaaʃiṭ il-ṃabka* the Wailing Wall (in Jerusalem).
بكّى *bakka* /vt/ to cause to weep. - vn *tabkiyya*; ava *mibakki*.
اتباكى *ʃitbaaka* /vi/ to pretend to weep or be sad· *bi-yitbaaku ɛal-ħurriyya ɛaʃaan yidħaku ɛan-naas* they pretend to be sad about (lost) freedom in order to deceive the people. - ava *mitbaaki*.

ب ك ى ( ) [2]
باكية *bakya* [1] /n pl *bawaaki*/ **1a** arch. **1b** arcade. ‖ *ʃil-bawaaki* street in Ataba famed for its arcades. **2** strip of metal bent into a curve.
باكية *bakya* [2] /n pl *-aat*/ casing for a drawstring or cord.

ب ك ى ا
بيكيا *bikya* shortened form of *rubabikya* (q.v.).

ب ك ى ن [1]
بكين *bikiin* /n/ Peking.
بكينى *bikiini* [1] /adj/ from or pertaining to Peking. *ʃil-baṭṭ il-bikiini* Peking duck.

ب ك ى ن [2]
بيكينى *bikiini* [2] /n/ bikini.

ب ك ى ه ( )
بيكيه *bikeeh* <Fr *piqué*> /n/ **1** quilting. **2** /adj invar/ quilted.
بوكيه *bukeeh* <Fr> /n pl *-aat*/ bouquet (usually large and arranged in a high basket stand).

ب ل
بل *bal* [↑] /conj/ **1** rather. *bi-yurfuḍ il-inħirafaat di bal wi-yqawim-ha* he rejects these deviations, or rather, resists them. **2** /w preceding neg/ but rather. *ʃin-nuqṭa ma b-tintifir-ʃ* [↓] *bal bi-tkawwin* the spot does not disperse, but rather builds up.

ب ل ا
بلا *bala* [1] **1** /prep/ without. *bala qafya* no kidding. *ʈiliɛ min il-muulid bala ħummuṣ* (he left the *muulid* without any chick-peas) he gained nothing from what should have been a profitable enterprise. **2** particle signalling prohibition or disapproval. *bala kalaam faariɤ* stop this nonsense! *bala xeeba* don't be stupid! - /repeated for emphasis/ *bala ʃadab bala waksa* damn literature - it's all a farce!

ب ل ا ج
بلاج *bilaaj* <Fr *plage*> /n pl *-aat*/ beach.

ب ل ا د
بولاد *bulaad* [↓] <P *pûlâd*> /n/ steel. *sadɤ-u wala l-bulaad* (his cheek surpasses steel (in hardness)) ≈ he is very thick-skinned.

ب ل ا ش see ب ل ش : *balaaʃ*

ب ل ا ط س
بيلاطس البنطى *bilaaṭus il-bunṭi* /prop n/ Pontius Pilate.

ب ل ا ق
بولاق *bulaaq* /prop n/ Boulak, a populous quarter in Cairo bordered on the west by the Nile. ‖ *dool wala btuuɛ bulaaq* they are worse than people from Boulak (i.e. they behave in an extremely rowdy manner). - *bulaaq id-dakruur* low-class area in the west of Greater Cairo.
بولاقى *bulaaqi* /adj */ pertaining to Boulak. *ʃit-tirɛa l-bulaqiyya* the Boulak Canal (later filled in and made into a street, it ran from el-Qulali district north through Shubra).

ب ل ا ل
بلال *balaal: ħalaal-i balaal-i* my own property.

ب ل ب ا ه
بلبياه *bilibaah: fuɤl il-bilibaah* deception, sleight of hand. *ɛamalu ɛalayya fuɤl il-bilibaah* they put one over on me.

ب ل ب ط
بلبط *balbaṭ* /vt and vi/ to splash about (in shallow water). - also *baṭbaṭ*. - vn *balbaṭa*; ava *mibalbaṭ*.
اتبلبط *ʃitbalbaṭ* = *balbaṭ*. - ava *mitbalbaṭ*.

ب ل ب ع
بلبع *balbaɛ* /vt/ **1** to make into small round balls. **2** to nibble at (food). **3** to eat (opium or similar drugs). - vn *balbaɛa*; ava/pva *mibalbaɛ*.
بلبوع *balbuuɛ* /n pl *balaabiɛ, balabiiɛ*/ **1** small pill-like ball. **2** tablet, pill (especially of drugs such as opium).
بلبوعة *balbuuɛa* = *balbuuɛ*.
اتبلبع *ʃitbalbaɛ* /vi/ passive of *balbaɛ*. - iva *mitbalbaɛ*.

ب ل ب ل [1]
بلبل *balbil*[1] /vt/ to throw into confusion. *ma-tbalbil-f' ʕafkaar-i* don't confuse me! *ʁawziin yiʁmilu balbala fil-balad* they're trying to spread confusion in the country. - vn *balbala*; ava/pva *mibalbil*.
اتبلبل *ʔitbalbil* /vi/ to become muddled, be thrown into confusion. - ava/iva *mitbalbil*.

ب ل ب ل [2]
بلبل *balbil*[2] /vi/ to emit mating cries (of a male goat). - vn *balbala*; ava *mibalbil*.

ب ل ب ل [3]
بلبل *bulbul* <P *bulbul*> /n pl *balaabil*/ nightingale.
بلبلة *bilbila* <Copt> /n pl *balaabil*/ almost any small rounded hanging object (e.g., bobble, plug cock of a tap, small knob, small round bell).

ب ل ب و ص
بلبوص *balbuuṣ*[1] /n pl *balabiiṣ*/ *[rur]* ember. - also *baṣbuuṣ*.
بلبوص *balbuuṣ*[2] /adj pl *balabiiṣ*/ stark naked. - /adverbially/ *ʈallaʁ-ha balbuuṣ* (1) he brought her out stark naked. (2) he (made a deal with her that) left her empty-handed.

ب ل ب ي ف
بلو بيف *bulubiif* <Engl *bully beef*> /n/ corned beef or mutton.

ب ل ت ت
بلّتة *balitta* <It> /n pl *-aat*/ artist's palette.

ب ل ت ك -
بلتكانة *baltakaana* <It *baldacchino*> /n pl *-aat*/ frame supporting a pelmet or canopy, baldaquin. - also *baldakaana*.

ب ل ت و ه
بلاتوه *balatooh* <Fr *plateau*> /n pl *-aat*/ (film) set, studio.

ب ل ت ي ك
بولوتيكة *bulutiika* <perh T *politika* from Gr> /n/ smooth talking, glib talking, cant.

ب ل ت ي ن
بلاتين *bilatiin* <Fr *platine*> /n/ **1** platinum. **2** *[dent]* amalgam. **3** = *bilatiina*.

بلاتينة *bilatiina* /n pl *-aat, bilatiin*/ *[auto]* contact breaker. - also *ʔablatiina*.

ب ل ج [1] see ب ل ا ج : *bilaaj*

ب ل ج [2] see ب ل ي ج : *buliiga*

ب ل ج ي ك
بلجيكا *baljiika* /prop n/ Belgium.
بلجيكى *baljiiki* **1** /adj */ Belgian. **2** /n */ a Belgian.

ب ل ح
بلح *balaḥ* /coll n/ date(s). || *balaḥ if-ʃaam* finger-shaped pastries made of deep-fried leavened batter, soaked in syrup. - *la ʈaal balaḥ if-ʃaam wala ʁinab il-yaman* ≈ he did not manage to get either of the things he wanted. - *wikaalit il-balaḥ* scrap market located in Boulak. - *ʁaraq balaḥ* alcoholic drink distilled from dates. - *balaḥ il-baḥr* mussel(s).
بلحة *balaḥa* /unit n, pl *-aat*/ **1** date. *zayy il-balaḥa fiz-zoor* like a date in one's throat (of something intolerable). **2** date-shaped object. *balaḥit goozit iṭ-ṭiib* a nutmeg. *balaḥteen il-miʁza* goat's pendants. *lamba balaḥa* small elongated light bulb (used mostly for chandeliers). *taxriiza balaḥa [naut]* back-splice. **3** motif in tent appliqué designs (see Pl.H, 10).
بلحاية *balaḥaaya* = *balaḥa*.
بلّاح *ballaaḥ* /n/ date-grower. *sana lil-fallaaḥ wi-sana lil-ballaaḥ [prov]* one year the date crop is good, the next the good luck goes to the farmer ≈ good luck moves from one to another.
بلّح *ballaḥ* /vi/ to produce dates (of a palm tree). - vn *tabliiḥ*; ava *miballaḥ*.

ب ل د [1]
بلد *balad* /fem n, pl *bilaad*/ **1** /sing and pl used interchangeably/ country, nation. *laazim nixalli wlad-na yḥibbu balad-hum* we must make our children love their country. *quṭn' blad-na ʕaḥsan quṭn' fil-ʁaalam* the cotton produced by our country is the best in the world. *bilaad if-ʃaam* the Levant. *bilaad barra* abroad. || *ʈiliʁ fi-wiff-u) bilaad allaah li-xalq allaah* (he set off into) the big wide world (without any particular plan). - *fi-ʕaaxir bilaad il-muslimiin* at the ends of the earth. **2** (home) village, town. *ʕana raayiḥ il-balad* I'm going to my village. *kull' balad fiiha nuur* every town has electricity. *ʕil-balad illi twaddi ʕaḥsan mi-lli tgiib* ≈ we can well do without him! || *ʕibn' balad* (1) native, not a foreigner. *da mif xawaaga da-bn' balad* he's not a foreigner, he's a

local. (2) one embodying the good qualities of the traditional classes, good sort, nice guy. - *da-nta baqeet ibn*^{i} *balad* (1) you've become a man of the world. (2) you've become easy-going.

بلدى *baladi* /adj usu invar/ **1a** in traditional Egyptian style. *ṭabbaax baladi* local Egyptian-style cook. *raqṣ*^{i} *baladi* local Egyptian-style dancing. *baladi ya niʕnaaʕ [vendor's cry]* wholesome mint! *waṣfaat baladi* (or *baladiyya*) folk remedies. *bi-ysammuu bil-baladi* ... the native Egyptian name for it is .... ‖ *ʕeef baladi* coarse whole-meal bread. - *samaad baladi* manure. - *samn*^{i} *baladi* clarified butter. - *diraaʕ baladi* linear measure equal to 0.58 metres. **1b** native to Egypt (as opposed to *ruumi* or *ʔafrangi*). ‖ *gazar baladi* dark red variety of carrot. **2** common or garden, ordinary. *muftaaḥ baladi* an ordinary spanner. *kalb*^{i} *baladi* a street dog. *manga baladi* a variety of small mango. **3a** of the (conservative) lower class (as opposed to what is modern and affected by external influence). *ʔil-ḥitta lli-ḥna sakniin fiiha baladi fwayya* the area in which we live is a bit low-class. **3b** vulgar. *sitt*^{i} *baladi qawi* a very vulgar woman.

بلديّة *baladiyya* /n pl *-aat*/ municipality.

بلديّات *baladiyyaat* /n/ person or persons coming from the same neighbourhood (as each other or as s.o. else). *dool baladiyyaat - ma tidxul-f*^{i} *benhum* these people are from the same neighbourhood - don't interfere with them. *ʔir-raagil baladiyyaat-ak miʃ ḥa-ygib-ha l-barr* that man from your village is not going to be reasonable. *baladiyyaat-ak waṣalu* the people from your home village have arrived. ‖ *ʔabu l-baladiyyaat [deris]* an Upper Egyptian.

بلدى *baladii-* /n, always w pron suff/ = *baladiyyaat*.

ب ل د [2]

بلادة *balaada* /n/ sluggishness, dullness, stupidity. *balaada fil-ʔiḥsaas* insensitivity.

بليد *baliid* /adj pl *bulada*/ sluggish, dull, stupid. *ḥiggit il-baliid masḥ it-taxta [prov]* the dull pupil busies himself cleaning the blackboard (so as to avoid answering questions) ≈ the incompetent cover up their inability by an appearance of activity.

أبلد *ʔablad* /el/ more/most dull or stupid.

بلّد *ballid* /vi/ to become sluggish, apathetic or dull. - vn *tabliid*; ava *miballid*.

اتبلّد *ʔitballid* = *ballid*. *taballud fil-ʔafkaar* apathy. - vn *taballud*; ava *mitballid*.

استبلد *ʔistablid* /vt/ **1** to consider sluggish or stupid. **2** to select for stupidity. – /vi/ **3** to be unresponsive, be hard to handle (especially of animals). - vn *ʔistiblaad*; ava *mistablid*.

ب ل د [3] see ب ل ا د : *bulaad*

ب ل د ف – see ب ر د ف – : *biladifeer*

ب ل د ك –

بلدكانة *baldakaana* <It *baldacchino*> /n pl *-aat*/ frame supporting pelmet or canopy, baldaquin. - also *baltakaana*.

ب ل د و –

بلدوزر *buldoozar* <Engl> /n pl *-aat*/ bulldozer.

ب ل د و س

بلدوس *balduus, baladoos* /n pl *-aat*/ *[mech]* portable lamp.

ب ل ز see ب ل و ز : *biluuza*

ب ل س see ب ل ى ص [1] : *buliis, buliisi*

ب ل س ا ن

بلسان *balasaan* /n/ *[bot]* elder.

ب ل س ت ر

بلاستر *bilastar* <Engl> /n/ plaster, medical adhesive tape.

ب ل س ت –

بلاستك، بلاستيك *bilastik, balastik, balastiik* <Engl> /n/ **1** plastic. **2** plasticized paint or varnish. *balastiik il-mayya* plastic paint to be mixed with water. – /adj invar/ **3** plastic. *kiis bilastik* a plastic bag. *ʔil-ʔarḍiyyaat il-bilastik* plasticized floor varnishes.

ب ل س م

بلسم *balsam* /n/ balsam.

ب ل س ن see ب ل س ا ن : *balasaan*

ب ل س ى ر

بلاسير *bilasiir* <Fr *placeur*> /n pl *-aat*/ cinema usher.

(ب ل س ى ه)

بلاسيه *bilaseeh* <Fr *placier*> /n pl *-aat*/ **1** sales representative. **2** cinema usher. - also *ʔablaseeh*.

بليسيه *biliseeh* <Fr *plissé*> /adj invar/ **1** pleated. **2** ribbed (of knitting).

ب ل ش

بلاش *balaaf* **1** /w pron suff, *balaaf min-*/ particle signalling **1a** prohibition or the urging of discontinuance. *balaaf fitiima* no insults! *balaaf hizaar* stop fooling around! *balaaf yiruuḥu* they had better not go. *balaaf tixalli mraat-ak tiṭlaɛ min il-beet* you ought not to let your wife go out of the house. *ʔagib-lak il-kitaab walla balaaf* shall I bring you the book or not? *balaaf minnu* let's do without it! ‖ *walla balaaf* par excellence, as in *ʔahu kida l-ɤuna walla balaaf* now that's what I call singing! **1b** retraction of something previously stipulated. *balaaf il-ɋalam - haat ik-kitaab bass* never mind about the pencil - just bring the book. *miʃ ɋadra ʔaakul ir-ruzz. - balaaf baɋa* 'I can't eat the rice.' 'O.K. don't.' ‖ *ʔaḥsan min balaaf* better than nothing. **2** /adj invar/ free. *ʔil ḥagaat il-balaaf ma-ḥadd'-ʃ bi-yiḥtirim-ha* no-one properly values things that are free. — /elliptically/ *ʔil-balaaf kattar minnu [prov]* take amply from what is free. *bi-balaaf* (also *bi-balaafi*) for free, gratis. — /adverbially/ *ʔiddaa-ni k-kitaab balaaf* he gave me the book free. *ʔilli yiigi balaaf yiruuḥ balaaf* ≈ easy come easy go. ‖ *ya balaaf* how cheap! (often used ironically). - *raaḥ balaaf* to come to nothing, as in *taɛab-u raaḥ balaaf* his effort was in vain, *ʔil-ɛamlaa-di miʃ rayḥaa-lak balaaf* you won't get away with what you've done.

بلّوسى *balluufi [joc]* /adv/ free, for nothing. *kalt' balluufi* I ate gratis.

ب ل ش ف

بلسفى *bulʃufi* <perh Engl> /pl *balaʃʃfa*/ **1** /n/ communist, bolshevik. **2** /adj/ **2a** communist. **2b** ruthless.

بلشف *balʃif* /vt/ **1** to convert (s.o.) to communism. **2** to cause (s.o.) to be corrupt or immoral. **3** to brainwash. - vn *balʃafa*; ava/pva *mibalʃif*.

اتبلسف *ʔitbalʃif* /vi/ **1** to become a communist. **2** to be corrupted. **3** to be brainwashed. - ava/iva *mitbalʃif*.

ب ل ص [1]

بلص *balaṣ [1] (u)* /vt/ to bribe. *ḥ-abluṣ-u rubɛ' gneeh* I'll bribe him with twenty-five piastres. - vn *balṣ*; ava *baaliṣ*; pva *mabluuṣ*.

بلصة *balṣa* /unit n, pl *-aat*/ a bribe.

اتبلص *ʔitbalaṣ [1]* /vi/ to be bribed. - iva *mitbiliṣ*.

انبلص *ʔinbalaṣ* = *ʔitbalaṣ [1]*. - iva *mınbiliṣ*.

ب ل ص [2]

بلص *balaṣ [2] (a)* /vt/ *[dent]* to form, shape (a crown). - vn *balṣ*; ava *baaliṣ*; pva *mabluuṣ*.

بلص *balṣ* /n/ *[dent]* crown-forming machine.

اتبلص *ʔitbalaṣ [2]* /vi/ *[dent]* to be formed, be shaped (of a crown). - iva *mitbiliṣ*.

ب ل ص [3]

بالوص *baluuṣ* /n/ **1** marrow (of bones). **2** /pl *bawaliiṣ*/ mouthpiece of a wind instrument (see Pl.J, 17).

ب ل ص [4] see ب ل ل ا ص : *ballaaṣ*

ب ل ص [5] see ب ل ى ص : *buliiṣ, buliiṣi, buliiṣa*

ب ل ض م

بلضم *balḍam* /vi/ **1** to scowl. *maa-lak mibalḍam kida - ma-tidḥak maɛaana* why are you scowling so - why not laugh along with us? **2** to stand up (to s.o. bigger than oneself). *naadir ʔinn il-muwaẓẓaf yibalḍam maɛa l-mudiir* only rarely does an employee stand up to the director. - vn *balḍama*; ava *mibalḍam*.

ب ل ط [1]

بلط *bilıṭ* /adj */ **1** blunt. *ʔazmiil naggaar bass' bilıṭ* a carpenter's chisel, but blunt. **2** boorish, thick-skinned.

بلاط *balaaṭ* /n/ **1** /coll n/ tile(s). ‖ *ʔil-balaaṭ il-malaki* the royal court. - *gazzaar il-balaaṭ* head butcher (in a slaughterhouse). - *sukkar balaaṭ* sugar formed into large slabs. - *ʔeeh yaaxud ir-riiḥ min il-balaaṭ [prov]* (what can the wind take from the tiles?) there's nothing to be gained from it. - *ɛal-balaaṭ* see *balaaṭa*. **2** unploughed land.

بلاطة *balaaṭa* /n pl *-aat*/ **1** /unit n/ a tile. ‖ *ɛala balaaṭa* bluntly, as in *gibna-haa-lu ɛala balaaṭa* we didn't mince our words with him. - *ɛala l-balaaṭa* (also *ɛal-balaaṭ*) (1) stripped bare. (2) flat broke. **2** slab (of concrete). **3** surface in a mud oven upon which bread is baked (see Pl.C, 9).

بلّط *ballaṭ [1]* **1** /vt/ to tile, pave. *lissa ma-ballaṭuu-ʃ ir-raṣiif* they still haven't paved the sidewalk. **2** /vi/ to be obstinate, refuse to budge. *ʔil-ɛarabiyya ballaṭit fis-sikka* the car came to a standstill on the way. *ballaṭit fil-xaṭṭ* she wouldn't co-operate. ‖ *da mballaṭ-li fil-xaṭṭ* he's refusing to co-operate. - *ballaṭ ɛal-fluus* he hung onto the money. - vn *tabliiṭ*; ava/pva *miballaṭ*.

تبليطة *tabliiṭa* /inst n, pl *tabaliiṭ*/ prepared surface of wooden planks (used, e.g., for a ramp or temporary bridge or roof).

مبلّط *muballiṭ* /n */ tiler.

اتبلّط *ʔitballaṭ* /vi/ to be paved, be tiled. - iva *mitballaṭ*.

استبلط *ʔıstablaṭ* /vt/ to consider (s.o.) thick-skinned. - vn *ʔistıblaaṭ*; ava *mistablaṭ*.

ب ل ط [2]
بلطة *bulṭa* <It *volta*> /n pl *bulaṭ/ [naut]* **1** tack, one of a series of tacking movements. **2** short voyage. ‖ *ḍarab bulṭa* he took a stroll, he bummed around.
بلّط *ballaṭ* [2] /vi/ *[naut]* **1** to tack, beat about. **2a** to beat up and down (outside a harbour). **2b** to lie (off a harbour) with engines running waiting to dock. - vn *tabliiṭ*; ava *miballiṭ*.

ب ل ط [3]
بلّوط *balluuṭ* /coll n/ oak(s).
بلّوطة *balluuṭa* /unit n, pl *-aat*/ an oak.

ب ل ط [4]
بلطة *balṭa* <T *balta*> /n pl *bulaṭ, balṭaat*/ billhook, axe, hatchet. *waxid-ha ḅil-balṭa* he acts tough, he strong-arms his way around. See further under ب ل ط ج

ب ل ط ج see also ب ل ط [4]
بلطجى *balṭagi* <T *baltacı*> /n pl *-yya*/ **1** thug, bully. *laazim niḥarras minnu - da waad balṭagi* we must watch out for him - that kid is a bully. **2** *[mil, obsol]* pioneer.
بلطج *balṭag* /vi/ **1** to become recalcitrant, become delinquent. *mibalṭaga ɛal-ʃugra* she's holding out on the rent. **2** to play truant (from school). - vn *balṭaga*; ava *mibalṭag*.

ب ل ط و
بالطو *balṭu* <Fr *paletot*> /n pl *balaaṭi*/ overcoat.

ب ل ط ى
بلطى *bulṭi* /n/ **1** /coll/ Nile perch (Tilapia sp.). **2** /pl *balaṭwa*/ *[slang]* person from Port Said.
بلطيّة *bulṭiyya* /unit n, pl *-aat*/ a *bulṭi* fish.
بلطيّاية *bulṭiyyaaya* = *bulṭiyya*.

ب ل ظ see ب ل و ظ : *baluuẓa*

ب ل ع
بلع *balaɛ (a)* /vt/ to swallow. *bi-yiblaɛu n-nafas ɛafaan yibayyinu ʃinnuhum gidɛaan* they take in the smoke to show that they are tough guys. ‖ *ḥaaga miʃ mabluuɛa* something unacceptable. - *baaliɛ radyu* ≈ very talkative. - *balaɛ riiq-u* (1) to (take a short break to) catch one's breath. (2) to be reassured. - vn *balɛ, balaɛaan*; ava *baaliɛ*; pva *mabluuɛ*.
بالوعة *baluuɛa* /n pl *-aat, bawaliiɛ*/ drain.
بلاعة *ballaaɛa* /n pl *balaliiɛ, ballaɛaat*/ **1** drain. ‖ *ballaaɛit filuus* (1) a squanderer of money. (2) a drain on one's financial resources. **2** plug-hole.
بلّوعة *balluuɛa* /n pl *-aat*/ sewer, drain.
بليعة *bulleeɛa* /n pl *-aat*/ = *balluuɛa*.
مبلع *mablaɛ* /n pl *mabaaliɛ*/ *[abus]* mouth, gob.
اتبلع *ʃitbalaɛ* /vi/ to be swallowed. ‖ *raagil ma-yitbiliɛ-ʃ*^{i} *min iz-zoor* a man who is hard to take, an insufferable man. - iva *mitbiliɛ*.
انبلع *ʃinbalaɛ* = *ʃitbalaɛ*. - iva *minbiliɛ*.
بلّع *ballaɛ* /vt/ **1** to cause to swallow. *ballaɛt-u kalaam-u* I made him take back his words. **2** to wash down (e.g., food). *haat kubbaayit mayya ʃaballaɛ biiha l-luqma* get me a glass of water to help me swallow the food. **3** to bribe. - vn *tabliiɛ*; ava/pva *miballaɛ*.
اتبلّع *ʃitballaɛ* /vi/ **1** to be made to swallow. **2** to be washed down (of, e.g., food). **3** to be bribed. - iva *mitballaɛ*.

ب ل ع م [1]
بلعم *balɛam* /vi/ to blossom. - vn *balɛama*; ava *mibalɛam*.

ب ل ع م [2]
بلعوم *balɛuum* /n pl *balaɛiim*/ gullet, oesophagus.

ب ل غ [1]
بلغ *balaɣ (u)* /vt/ **1** to reach (of news etc.). *balaɣ-na xabar wafaat-u* news of his death reached us. **2** to attain. *ʃin ʃa-lla tubluɣ ʃamal-ak [women]* may you realize your hopes! *lissa ma-balaɣ-ʃ*^{i} *sitt*^{i} *sniin* he's not yet six years old. — /vi, also imperf *yiblaɣ*/ **3** to reach puberty. - vn *buluuɣ, mablaɣ, bilaaɣ*$^{↓}$; ava *baaliɣ*.
بلوغ *buluuɣ* /n/ puberty.
بلاغ *bilaaɣ* = *buluuɣ*.
بلاغ *balaaɣ* /n pl *-aat*/ **1** *[leg]* official complaint to the police or a magistrate. **2** communiqué. **3** *[obsol]* roll of attendance (at el-Azhar University).
بالغ *baaliɣ*$^{↑}$ **1** /n */ adult. **2** /adj */ extreme, extensive. *garḥ*^{i} *baaliɣ* serious wound.
بلاغة *balaaɣa*$^{↑}$ /n/ rhetoric. *naḥw*^{i} *w-balaaɣa* grammar and rhetoric.
بلاغى *balaaɣi* /adj/ rhetorical. *ṣuwar balaɣiyya* rhetorical images.

بليغ *baliiɣ* /adj * and pl *bulaɣa*/ eloquent.
أبلغ *ʔablaɣ*$^{↑}$ /el/ more/most eloquent.
مبلغ *mablaɣ* /n pl *mabaaliɣ*/ **1** amount, sum (usually of money). *ʔiddet-lu fiik bi-mablaɣ ɛafara gneeh* I gave him a cheque to the amount of ten pounds. **2** (large) amount, (great) extent. *ʔil-masaafa kaanit mablaɣ* it was a considerable distance. *ɛafaan tiɛrafi mablaɣ*

ḥubb-i liiki so that you should know how much I love you.

بلّغ *ballaɣ* /vt/ **1** to tell or communicate (s.th.) to (s.o.). *ḥadd' ballaɣ-ak il-xabar* has anyone told you the news? **2** to report (an offence etc.). *ballaɣt is-sirʿa lil-buliiṣ* I reported the theft to the police. **2b** to report to (the police etc.). *ballaɣt il-buliiṣ bis-sirʿa* I reported to the police about the theft. **3** to cause the attainment of. *ṭuulit il-baal tiballaɣ il-ʕamaal [prov]* ≈ everything comes to him who waits. - vn *tabliiɣ*; ava *miballaɣ, muballiɣ↑*.

مبلّغ *muballiɣ* /n */ informant.

بالغ *baaliɣ*[2] /vi/ to exaggerate. *ʕinta kull[a] ḥaaga tbaaliɣ fiiha* you exaggerate in everything. *di ʕarqaam mubaalaɣ fiiha ʃwayya* these figures are somewhat inflated. - vn *mibalɣa, mubalɣa*; ava *mibaaliɣ, mubaaliɣ*; pva *mubaalaɣ↑*.

أبلغ ʕablaɣ[2]↑ = *ballaɣ* 1. - vn *ʕiblaaɣ*.

ب ل غ [2]

بلغة *bulɣa, balɣa* /n pl *bulaɣ, bulɣaat, balɣaat*/ pair of men's leather backless slippers (see Pl.F, 6). ‖*manquuʿ il-bulaɣ* poor quality liquor, rot-gut.

ب ل غ ر

بلغاريا *bulɣarya* /prop n/ Bulgaria.

بلغارى *bulɣaari* **1** /adj */ Bulgarian. **2** /n */ a Bulgarian. **3** /n, no pl/ the Bulgarian language.

ب ل غ م

بلغم *balɣam* /n/ mucus, phlegm, sputum.

بلغمى *balɣami: mazaag* (or *ṭabʿ) balɣami* a phlegmatic temperament (one of the four cardinal humours).

ب ل ف [1]

بلف *balaf (i)* <poss Engl> /vt/ to bluff, take in. - vn *balf, balafaan*; ava *baalif*; pva *mabluuf*.

بلفة *balfa* /inst n, pl *-aat*/ a bluff, a deception.

بلفجى *balfagi* /n pl *-yya*/ bluffer, deceiver.

بلاّف *ballaaf* /n */ sweet-talker, deceiver, bluffer.

اتبلف *ʕitbalaf* /vi/ to be bluffed, be taken in. - iva *mitbilif*.

ب ل ف [2]

بلف *balf* <Engl> /n pl *buluuf, bulúfa*/ valve.

ب ل ق ا ن

البلقان *ʕil-balqaan* /prop n/ the Balkans.

ب ل ك

بلوك، بلك *buluk* (also *bulukk'*) <T *bölük*> /n pl *bulukaat, bulukkaat/ [police and mil, obsol]* company. *buluk ʃamiin* company quartermaster-sergeant. *bulukaat in-niẓaam [obsol]* riot police (subsequently styled *ʃil-ʃamn il-markazi*).

ب ل ك ا ر

بلاكار *balakaar* <Fr *placard*> /n pl *-aat*/ wall-cupboard.

ب ل ك ك [1]

بلك *balakk, bilakk* <prob Engl *black*> /n/ tar, pitch, bitumen.

بلكّة *balakka* <It *placca*> /n pl *-aat*/ **1** *[elec]* insulating disc. **2** *[plumb]* washer. **3** *[naut]* escutcheon.

بلك، بلوك *bulukk*[2] <Engl *block*> /n pl *-aat*/ **1** block of buildings. **2** (also *kuʃk' bulukk*) railway signal-box. *ʿaamil bulukk* signalman. **3** *bulukk' noot* writing pad.

ب ل ك ك [2] see ب ل ك : *bulukk'*

ب ل ك ل –

بولكلى *bulkili* /prop n/ residential quarter in Alexandria to the east of Stanley, and summer quarters of the government under the monarchy.

ب ل ك و ن

بلكون *balkoon, balakoon* <perh Fr *balcon*> /n/ balcony or back stalls (in a cinema or theatre).

بلكونة *balkoona, balakoona* <perh It *balcone*> /n pl *-aat*/ **1** balcony. **2** platform (e.g., of a high-wire performer).

ب ل ك ى

بلكى *balki* <T *belki* from P> /adv/ perhaps, maybe.

ب ل ل [1]

بلّ *ball (i)* /vt/ **1** to moisten, dampen, wet. *laazim tibill ir-ruqaaq bi-ʃarbaat* you should moisten the *ruqaaq* with syrup. *saʿaat il-ʿayyil yibill' nafs-u* sometimes the child wets himself. *faʿr-i lissa mabluul* my hair's still wet. ‖*ball' riiq-(u)* (1) to wet one's whistle. (2) to give (s.o.) respite. - *ball iʃ-ʃarbaat* he diluted the syrup to make a sweet drink. **2** to soak. *tibill il-fuul li-ɣaayit ma ynabbit* you soak the broad beans until they sprout. ‖*bill-u wi-ʃrab mayyit-u* (soak it and then drink the water) ≈ it's not worth the paper it's written on (of a worthless document or written paper; reference to the folk cure of drinking water in which a written charm has

been soaked). **3** to embarrass. *ʕinta ballet-ni quddaam xaṭibt-i* you embarrassed me in front of my fiancée. - vn *ball, balla, balal, balalaan*; ava *baalil*; pva *mabluul*.

بلّة *balla* **1** /inst n, pl *-aat*/ a moistening, a wetting. **2** /vn/ || *zawwid iṭ-ṭiin balla* ≈ he made things go from bad to worse. **3** /n pl *bilal*/ bundle (of reeds, for making a mat).

بلل *balal* /n/ moisture.

بليلة *biliila* /n/ dish of stewed wheat eaten with milk and sugar. *biliila farkasiyya* a *biliila* made with unhusked green wheat.

مبلّة *maballa: zawwid il-maballa ṭiin* ≈ he made things go from bad to worse.

اتبلّ *ʔitball* /vi/ **1** to become moist or damp. **2** to be or become soaked. ||*ma-titball'-ʃ fi-buqq-u fuula* (a broad bean can't be soaked in his mouth) he can't keep his mouth shut. **3** to be or become embarrassed. - ava/iva *mitball*.

انبلّ *ʔinball* = *ʔitball*. - ava/iva *minball*.

بلّل *ballil* /vi/ to moisten slightly. *tiballil il-qumaaʃ wi-baʕdeen tikwii* you dampen the cloth and then iron it. - vn *tabliil*; ava/pva *miballil*.

ب ل ل [2]

بلّ *bull* <poss Engl mil slang *bull*> /n/ *[mil]* khaki webbing.

ب ل ل ا ص

بلّاص *ballaaṣ* /n/ **1** *kafr ʔil-ballaaṣ* /prop n/ a village near Qena in Upper Egypt, known in particular for its clay deposits. ||*min kafr il-ballaaṣ* oafish. — /pl *balaliiṣ*/ **2** (also *ballaaṣi*) large two-handled earthenware pitcher (see Pl.A, 10). **3** clumsy and stupid person, oaf.

بلّاصى *ballaaṣi* = *ballaaṣ* 2.

ب ل ل ا ن

بلّانة *ballaana* <Gr *balaneus*> /n pl *-aat*/ female bath-attendant and masseuse.

ب ل ل و

بلّو *ballu* <perh Engl> /n/ hullaballoo. *ʕaamil ballu* he's making a big fuss.

ب ل ل و ر [1]

بلّورة *balluura'* <Engl> /n/ *[anat]* pleura.

ب ل ل و ر [2] see ب ل و ر : *balluur, balluura[2], balluuri*

ب ل ل و ش see ب ل ش : *balluufi*

ب ل ل و ن

بلّون *balloon* <It *pallone*> /n pl *-aat, balaliin*/ balloon. - also *baloon*.

بلّونة *balloona* = *balloon*. - also *baloona*.

ب ل ل ي ن

بلّين *balliin* <Lat> /n pl *balaliin*/ *[Chr]* pallium.

ب ل م

بلم *balam* /adj invar/ dim-witted.

بلّم *ballim* /vi/ to be or become aghast, stupefied or sullen. - vn *tabliim*; ava *miballim*.

تبليمة *tabliima* /pl *-aat*/ instance noun of *tabliim*. *ʕamma kaan miballim ḥittit tabliima* he was absolutely staggered.

اتبلّم *ʔitballim* /vi/ to be stupefied, become stupid. *tuqʕud tiʕallim fil-mitballim yiṣbaḥ naasi [prov]* no matter how much you try to teach the dimwit he turns out not to have learned a thing. - ava *mitballim*.

استبلّم *ʔistiballim↓* /vi/ to be or become stupefied or mystified. - ava *mistiballim*.

ب ل م ث see ب ل م و س : *balmoosi*

ب ل م ر

بلمر *balmar* <Engl> /vt/ *[chem]* to polymerize. - vn *balmara*; ava/pva *mibalmar*.

اتبلمر *ʔitbalmar* /vi/ *[chem]* to be polymerized. - iva *mitbalmar*.

ب ل م س ل

بليمسول *bilimsul* <Engl>: *ʕalaama blimsul [naut]* Plimsoll line.

ب ل م ن

بلمان *bulman* <Engl *pullman*> /n/ overland express bus.

ب ل م و س

بلموسى *balmoosi* <Engl> /n pl *balamiis*/ *[Chr]* a member of the Plymouth Brethren.

ب ل م و ط

بلاموطى *balamooṭi: raaḥ balamooṭi* to be in vain, go for nothing.

ب ل ن [1] see ب ل ل ا ن : *ballaana*

ب ل ن [2] see ب ل ل و ن : *balloon, balloona*

[3] ب ل ن see ب ل ل ى ن : *balliin*

[4] ب ل ن see [1] ب ل و ن : *baloon[1], baloona*

[5] ب ل ن see [2] ب ل و ن : *baloon[2], baluun*

ب ل ن ت
بلنتى *bilinti, bilanti* <Engl> /n pl *-yaat, -haat/ [soccer]* penalty, penalty kick.

ب ل ن ج
بلنجة *balanga* /n pl *-aat/ [agric]* metal rod by which the depth of a ploughshare may be adjusted (see Pl.D, 19).

ب ل ن د
بولندا *bulanda* /prop n/ Poland.
بولندى *bulandi* **1** /adj */ Polish. **2** /n */ a Pole. **3** /n, no pl/ the Polish language.

ب ل ن س see ب ل ن ص : *balanṣ*

(ب ل ن ش)
بلانس *balanʃ[1]* or *balanf[1]* <Fr *planche*> /n pl *-aat/* table top.
بلانش *balanʃ[2]* or *balanf[2]* <Fr *blanche*> /n pl *-aat/ [mus]* minim, half note.
بلانشة *balanʃa* <perh Fr *planche*> /n pl *-aat/ [theat]* box in which coloured lights are fixed on the stage.

ب ل ن ش -
بلانسيطة *balanʃiiṭa* <Fr *planchette*> (surveyor's) plane-table.

(ب ل ن ص)
بلنص *balanṣ[1]* /n pl *-aat, balaaniṣ/* (powered) fishing boat.
بلنص *balanṣ[2]* <perh Fr *balance*> /n pl *-aat/* **1** somersault. *ḍarab balanṣ[1] fil-hawa* he turned over in mid-air. **2** balance-wheel (in a watch or clock).

ب ل ن ك و
بلانكو *balanku* <It *palanco*> /n/ *[naut]* tackle. *balanku kawirta* deck tackle. *balanku migwiz* double whip.

ب ل ن م -
بلانيمتر *balanimitr* <Fr> /n pl *-aat/ [geom]* planimeter.

ب ل ه
بله *balah* /n/ idiocy.
أبله *ʔablah* /adj, fem *balha*, pl *bulh, bulaha/* idiotic, imbecilic.

ب ل ه ر -
بلهارسيا *bilharsiya, bilharisya* (also *bilharsa, harsa↓*) <prop n *Bilharz*> /n/ *[path]* bilharziasis, schistosomiasis.

ب ل و see [1] ب ل ى : *balwa*

ب ل و ر
بلّور *balluur* /n/ cut glass, crystal. - also *bannuur*.
بلّورة *balluura[2]* /unit n, pl *-aat/* piece of crystal. *balluurit ʈarabeeza* plate-glass table top. - also *bannuura*.
بلّورى *balluuri* /adj/ crystalline.
بلور *balwar* /vt/ **1** to cause to crystallize. *sukkar mibalwar* granulated sugar. **2** to summarize, epitomize, bring into focus. - vn *balwara*; ava/pva *mibalwar*.
اتبلور *ʔitbalwar* /vi/ to crystallize. - ava *mitbalwar*.

ب ل و ز
بلوزة *biluuza, bilooza* <It *blusa*> /n pl *-aat/* **1** blouse. **2** (woman's) sweater.

ب ل و ظ
بالوظة *baluuẓa* <T *palûze* from P> /n/ **1** smooth pudding based on cornstarch, sugar and water. **2** *[abus]* fat slob.

ب ل و ف ر
بلوفر *buloofar, buloovar* <Engl> /n pl *-aat/* pullover, sweater.

ب ل و ك see ب ل ك and [1] ب ل ك ك : *bulukk[1], bulukk[2]*

[1] ب ل و ن
بلون *baloon[1]* <poss It *pallone*> /n pl *-aat/* balloon. - also *balloon*.
بلونة *baloona* = *baloon*. - also *balloona*.

[2] ب ل و ن
بالون *baloon[2], baluun* <Fr *ballon*> /n/ brandy snifter.

[1] ب ل ى
بلى *bili (a)* /vi/ to wear out, become rotten. - vn *bila*; ava *baali*.
بلى *bala[2] (i)* /vt/ to afflict. *yibli w-yʕiin* God (both)

afflicts (us) and helps (us to withstand the ordeal). - /the literary passive occurs/ *ʕiza buliitum fa-statiru [prov]* when you have been afflicted (with being a sinner) don't advertise it. - vn *bala*; ava *baali*; pva *mabli*.

بلاء، بلا *bala*[3] /n/ **1** calamity, affliction. *wuquuʕ il-bala wala ntiẓaar-u [prov]* the occurrence of calamity is preferable to anticipation of it. **2** serious skin disease (e.g., mange).

بلوة *balwa* /n pl *balaawi*/ calamity, misfortune, disaster. *ʕeeh il-balaawi di* what's all this mess? *gat-ak balwa* ≈ may misfortune befall you! *min ʃaaf balwit ɣeer-u haanit ʕalee balwit-u [prov]* one's own misfortunes can be insignificant in comparison with those of others. *ʕil-balwa tʕumm*[i] *wir-raḥma txuṣṣ* affliction is for all, while mercy is for individuals. ‖ *raagil balwa* (1) a clever devil. (2) a thorough pest.

بليّة *baliyya* /n/ calamity, misfortune, disaster. - /adjectivally/ *raagil baliyya* a wretched man.

اتبلى *ʕitbala* /vi/ to be afflicted. - iva *mitbili*.

انبلى *ʕinbala* = *ʕitbala*.

اتبلّى *ʕitballa* /vi/ *[abus]* to make an accusation, knowing it to be false. *ʕitballa ʕalayya bi-ʕinn*[a] *ʕalayya gneeh* he falsely accused me of owing a pound. - ava *mitballi*.

ابتلى *ʕibtala* **1** /vt/ to afflict. *rabb-i-na yibtilii-k bi-muṣiiba* may God afflict you with a disaster! **2** to be afflicted. *il-balaawi lli btaleena biiha* the calamities we have suffered. - vn *ʕibtila*; ava/pva *mibtili*; pva *mubtali*↓.

ب ل ى [2]

بال *baal*[1] /n/ mind. *da kalaam ma-gaa-ʃ*[i] *ʕala baal-i* such a thing never crossed my mind. *raaḥ ʕan baal-i* it slipped my mind. *ʕaddii-k ʈariiḥa ma-kat ʕal-baal* I'll give you a beating such as you never dreamed of. *ʕin ʃa-lla tnuul illi f-baal-ak* I hope you attain what you have in mind. ‖ *ʈawwil baal-u* he was patient. - *baal-u waasiʕ* (1) he is tolerant. (2) he has no idea of time, he is hopelessly unpunctual. - *ṣaaḥib baleen kaddaab (w-abu talaata mnaafiq) [prov]* ≈ one who tries to do two things at once is fooling himself (and he who tries to do three fools himself even more). - *xad* (or *xalla) baal-u* to be mindful, pay attention, take note, as in *ma-xadt*[i] *-ʃ baal-i mil-ḥikaaya di* I didn't think of that, *xud baal-ak lamma ʕakallim-ak* pay attention when I speak to you! *xud baal-ak wi-nta mʕaddi ʃ-ʃaariʕ* watch out while you're crossing the street! *ʕana waaxid baal-i* (1) I'm on my guard. (2) I'm paying attention. (3) I'm quite well aware, *xud baal-ak mif-ʃanʈa ʕala ma ʕagiib ʕilbit sagaayir* keep an eye on the bag while I get a packet of cigarettes! *xad* (or *ḥaʈʈ*[i]*) fi-baal-(u)* /usu w neg/ to become perturbed, become concerned, as in *ʕiftakart innaha ḥaaga basiiʈa ʈumt*[i] *ma-xadt*[i] *-ʃ fi-baal-i* I thought it a simple matter so I didn't get anxious. - *ʈaal fi-ʕaʈl*[i] *baal-u* he thought to himself. - *ʕilli baal-ak fi-* the you-know-what, as in *gibt illi baal-ak fii* did you bring the you-know-what? - *min illi baal-ak fii* ≈ of the you-know-what sort, as in *dool banaat mi-lli baal-ak fiihum* you know what sort of girls they are! - *baal-ak* you know (what?), as in *baal-ak - ʕana wʈiʕt*[i] *f-ḥubb-a-ha* you know what? I've fallen in love with her! *baal-ak baʈa law ruḥna w-laʈeena l-ʈaṭr*[i] *miʃi* you know what, if we go and find the train has left (we'll be in a fix).

¶ *ʕala baal ma* and *ʕa-baal ma* /conj/ (1) until. *ʕistannaa-ni ʕala baal m-aagi* wait for me until I come. (2) by the time that. *ʕala baal ma geet kaan rawwaḥ* by the time I came, he had gone home.

بالى *baala*[2]↑ /vi/ to care, pay heed. - vn *mubalaa*; ava *mubaali*.

ب ل ى [3]

بلية *bilya* <It *biglia*> /n pl *bilay, bilyaat*/ **1** marble, small ball. *bilya xaʃab* small wooden knob. **2** rolling-pin.

بلى *bily* /coll n/ marble(s). ‖ *rummaan bily* ball-bearings. - *naftaliin bily* moth-balls.

ب ل ى ت -

بلياتشو *bilyatʃu* <It *pagliaccio*> /n pl *-aat*/ jester, clown.

ب ل ى ج

بوليجة *buliiga* <It *puleggio*> /n pl *-aat/ [naut]* sheave (of a block).

ب ل ى ر -

بلياردو *bilyardu* <It> /n/ billiards.

ب ل ى ص [1]

بوليس *buliiṣ* (also *buliis*) <prob Fr> /n/ police. *ʕaskari buliiṣ* a policeman. *ʕil-buliiṣ id-dawli* Interpol. *buliiṣ ḥarbi* military police.

بوليسى *buliiṣi* (also *buliisi*) /adj/ pertaining to police. *riwaaya buliṣiyya* a detective story.

ب ل ى ص [2]

بوليصة *buliiṣa* <It *polizza*> /n pl *bawaaliṣ, bawaliiṣ,*

buliṣaat/ bill. *buliiṣit taʃmiin* insurance policy document. *buliiṣit ʃaḫn* bill of lading.

ب ل ى ه
باليه *baleeh* <prob Fr> /n/ ballet.

ب م
بم *bim: ʠaal bim* to utter a word (of protest), as in *ʃiwʒa tʠuul bim* not a peep out of you! *ma-ʠal-ʃ' bim* he didn't make the slightest protest.

ب م ب [1]
بمبة *bumba'* <It *bomba*> /unit n, pl *-aat*/ **1** percussion fire-cracker. **2**↓ bomb. ‖ *ʃiddaa-li bumba* he played a dirty trick on me.
بمب *bumb* /coll n/ **1** percussion fire-crackers. **2**↓ bombs. ‖ *zayy il-bumb* great, fantastic, as in *ṣiḩḩit-i zayy il-bumb* my health is fantastic!

ب م ب [2]
بمبة *bumba²* <It *pompa*>/n pl *-aat*/ pump.

ب م ب [3]
بمبه *bamba'* <T *pembe*> /adj invar/ pink, rose-coloured. *bamba msaxsax* shocking pink. - also *banba, banbi*.
بمبة *bamba²: ʃiqaaʒ bamba [mus]* rhythmic mode in 4/4 time consisting of two strong beats of one count each, followed by a rest and a weak beat of half a count each and a rest of one count.
بمبه *bamba³* given name (usually female). ‖ *wilaad ʒali bamba* street acrobats.

ب م ب ا ش see ب ن ب ا ش: *bimbaaʃi*

ب م ب ا غ see ب ن ب ا غ: *bumbaaɣ*

ب م ب و
بامبو *bambuu, bambu* <perh Engl> /n/ bamboo cane. *karaasi bambu* cane chairs.

ب م ب و ط
بمبوطى *bambuuṭi* <Engl *bumboat*> /n pl *-yya*/ port trader who effects sales from a small boat to passengers on board ship.

ب م ب و ن [1]
بمبون *bumboon* <prob Fr> /n/ **1** pompon, fringing with beads or tassles (used in the decoration of upholstery). **2** *[bot]* pompon.

ب ن ب و ن [2] see ب م ب و ن: *bumbooni, bumbunaaya, bumbuniira*

ب م ب ى ه
بومبيه *bumbeeh* <Fr *bombé*> /adj invar/ convex, rounded.

ب م و ل
بيمول *bimool* <Fr *bémol*> /n pl *-aat*/ *[mus]* flat. *nuṣṣ' bimool* half flat - also *mull*.

ب م ى
بامية *bamya* /n/ okra. ‖ *di ʃumuur bamya* this is all corruption.

ب ن ء see ب ن ى [1]: *binaaʃ, binaaʃan, bannaaʃ*

ب ن ب
بنبه *banba* <T *penbe*> /adj invar/ pink, rose-coloured. *banba msaxsax* shocking pink. - also *bamba*.
بنبى *banbi* = *banba*.

ب ن ب ا ش
بنباشى *binbaaʃi, bimbaaʃi* <T *binbaşı*> /n pl *-yya*/ *[obsol]* army rank equivalent to lieutenant-colonel (replaced by *muqaddam*). - also *bikbaaʃi*.

ب ن ب ا غ
بنباغ *bumbaaɣ* <T *boyun bağı*> /n pl *banabiiɣ*/ bow-tie.

ب ن ب و ن
بنبونى *bumbooni* or *bunbooni* <It *bomboni*> /coll n/ sweet(s), candies.
بنبونة *bumbuuna* or *bunbuuna* /unit n, pl *-aat*/ a sweet, a candy.
بنبونايه *bumbunaaya* or *bunbunaaya* = *bumbuuna*.
بنبونيرة *bumbuniira* or *bunbuniira* <It *bomboniera*> /n pl *-aat*/ covered candy-dish.

ب ن ت [1]
بنت *bint* (also, less formally, *bitt*) /n pl *banaat*/ **1** girl. *madrasit banaat* a girls' school. *ʃikfi g-garra ʒala fumm-ā-ha tiṭlaʒ il-bint' l-ʃumm-a-ha [prov]* ≈ just as a jar will only turn out what it was filled with, so a girl will always take after her mother. ‖ *ʃil-bitt' mraat-i* ≈ my little wife, the little old girl. **2** daughter. *bint' ʒamm* female paternal first cousin. ‖ *ya bint-i* form of address to a woman younger than the speaker. **3** virgin.

4 queen (in cards). – for other phrases beginning with *bint* (e.g., *bint' naas*), look up the second component of the phrase. see further under ب ت ت ²

بناتي *banaati* /adj invar/ **1** pertaining to girls, girlish (of clothes, games, manners etc.). **2** seedless (of fruit). **3** young (of beef).

بنوت *binuut: bint' bnuut* a virgin.

بنوتة *bannuuta* /adj invar/ sissyish. *walad bannuuta* an effeminate boy.

ب ن ت ² see ب ن ط : *bunt*

ب ن ت ا ج

بونتاج *buntaaj* <perh Fr *pointage*> /n/ *[print]* final retouching of zinc plate.

ب ن ت س –

بانتيسبانيا *bantisbanya* <It *pan di Spagna*> /n/ sponge cake.

ب ن ت ف ل

بنتوفلي *bantufli* <It *pantofoli*> /n/ **1** /coll/ slippers. **2** /pl *bantuflaat*/ pair of slippers.

ب ن ت ك –

بنتكستي *bintikusti* <Gk *pentêkostê*> /n/ *[Chr]* Pentecost.

ب ن ت و

بنتو *bintu* <It *venti*> /n pl *-haat*/ *[obsol]* twenty-franc piece, Napoleon.

ب ن ت و ت

بنتوت *bantuut* <prob Copt> /n pl *banatiit*/ peg on the beam of a plough, or of a *saqya*, for the attachment of harness (see Pl.D, 13). - also *ʕantuut, lantuut*.

ب ن ت ي ك

بنتيك *bantiik* /n pl *banatiik*/ strip of low-lying land alongside a dyke. - also *bankiik*.

ب ن ج ¹

بنج *bing* /n/ anaesthetic. *duktuur bing* anaesthetist. *bing' kulli* general anaesthetic. *bing' mawḍiʕi* local anaesthetic.

بنّج *bannig* /vt/ to anaesthetize. - vn *tabniig*; ava/pva *mibannig*.

اتبنّج *ʕitbannig* /vi/ to be anaesthetized. ‖ *kal wi-tbannig* he stuffed himself silly. - iva *mitbannig*.

ب ن ج ²

بنج *bang* <P *panj*> /n pl *-aat*/ five (on dice etc.).

ب ن ج ب –

بنج بونج *bingibung* <Engl> /n/ ping-pong.

ب ن ج ر

بنجر *bangar'* <T *pancar*> /n/ beetroot. *bangar is-sukkar* sugar beet.

بنجر *bangar²* /vi/ to become bloated, become full. *kal wi-bangar* he ate until he reached near bursting. - vn *bangara*; ava *mibangar*.

ب ن ج ز

بنجز *bunguz* <Engl> /n/ bongo drums.

ب ن ج ق

بنجق *bangaq* /n pl *banaagiq*/ peg-box (of a musical instrument, see Pl.J, 8).

ب ن ج و ر

بونجور *bunjuur* <Fr *bonjour*> /interj/ good day!

ب ن د ¹

بند *band* <T *bend* from P> /n pl *binuud*/ article, item, clause, paragraph (of a law, contract etc.). *ʕil-band' ma-yismaḥ-f* (1) the (budget) item does not permit it. (2) the money won't stretch that far. *ḥ-aḥuṯṯ-a-ha taḥt' band il-badalaat* I'll charge it to allowances. *ʕil-masaaʕil di tudxul fi-bnuud il-ḥurriyya f-faxṣiyya* these matters fall into the categories of personal liberty.

بنّد *bannid* /vt/ to itemize, list, categorize. - vn *tabniid*; ava/pva *mibannid*.

اتبنّد *ʕitbannid* /vi/ to be itemized, be categorized. - iva *mitbannid*.

ب ن د ² ( )

باندة *banda* <prob It *banda*> /n pl *-aat*/ decorative band on clothes.

بندة *binda* /n pl *binda*/ *[naut]* bollard.

ب ن د ا ج

بنداج *bindaaj* (also *bindaaʃ*) <Fr> /n pl *-aat*/ bandage.

ب ن د ا ش see ب ن د ا ج : *bindaaʃ*

ب ن د ر ¹

بندر *bandar* <P *bandar*> /n pl *banaadir*/ **1** (large) town. *sittaat il-bandar* the ladies of the town. **2** *[obsol]*

police headquarters of a town (as distinct from a *markaz*, the police headquarters of the surrounding villages). *ḥ-awaddii-k il-bandar* I'll take you to the police (said in a town).
بندري *bandari* /adj */ *[obsol]* coming from or pertaining to a *bandar*.

ب ن د ر [2] see ب ن د و ر: *banduur, banaduura, banduura*

ب ن د ر [3] see ب ن د ي ر: *bandiir, bundeera*

ب ن د ق
بندق *bunduq* /coll n/ hazelnut(s).
بندقة *bunduqa* **1** /unit n, pl *-aat*/ a hazelnut. **2** /n pl *banaadiq*/ *[rur]* rifle, large gun.
بندقي *bunduqi* /n/ **1** Venetian sequin. – /adj invar/ **2** 24-carat (of gold). **3** hazel, red-gold (in colour).
بندقيّة *bunduqiyya* /n pl *banaadiq*/ rifle, shotgun. *bunduqiyyit raff* shot-gun. *bunduqiyyit hawa* air-gun.
البندقيّة *ʔil-bunduqiyya* /prop n/ Venice.

ب ن د ن –
بندنتيف *bandantiif* <Fr *pendentif*> *-aat*/ necklace with a medallion or pendant. - also *banṭanṭiif*.

(ب ن د و ر)
بندور *banduur* /n pl *banadiir, banduraat*/ hair-spring of a watch.
بندورة *banaduura, banduura* <It *pomodoro*> /coll n/ *[rur]* tomato(es).

ب ن د و ل
بندول *banduul, bandool* <Fr *pendule*> /n pl *banadiil, bandulaat*/ pendulum.

(ب ن د ي ر)
بندير *bandiir* /n pl *banadiir*/ tambourine.
بنديرة *bundeera* <It *bandiera*> /n pl *banadiir*/ **1** flag, banner. **2** taxi-meter flag.

ب ن ر
بنّور *bannuur* /coll n/ (thick) glass, cut glass, crystal. ‖ *ya ṭabaq bannuur* ≈ you pretty thing! (flirtatious remark to a girl).
بنّورة *bannuura* /unit n/ **1** /pl *-aat*/ any thick piece of glass. *bannuurit ṭarabeeza* a glass table top. **2** /pl *bananiir*/ **2a** glass water container of a water-pipe (see Pl.I, 5). **2b** *[slang]* 'drunkard's bottle', a round bottle (of spirits) containing approximately a quarter of a pint.

بنّر *bannar* /vt/ to polish (e.g., leather) by rubbing with a cylindrical block of glass. ‖ *wiff' mbannar* a face glowing with health. - vn *tabniir*; ava/pva *mibannar*.
اتبنّر *ʔitbannar* /vi/ to be given a sheen (by being rubbed with a cylindrical block of glass). - iva *mitbannar*.

ب ن ز
بنز *binz* /n pl *bunuuz, bunúza*/ (piston) ring.

ب ن ز م see ب ن ز ي ن: *banziim*

ب ن ز ن [1]
بنزن *binzin* (also *maʃʕal binzin*) <prop n *Bunsen*> /n/ bunsen burner.

ب ن ز ن [2] see ب ن ز ي ن: *banziin, banziina*

ب ن ز ه –
بنزهير *banzaheer* <T *panzehir* from P> /coll n/ Egyptian lemon(s). *banzaheer ya lamuun* cry of the lemon vendor.

ب ن ز ي م see ب ن ز ي ن: *banziim*

ب ن ز ي ن
بنزين *banziin* (also *banziim*) <perh It *benzina*> /n/ **1** benzine, petrol, gasoline. *maḥaṭṭit banziin* petrol station. **2** *[auto]* accelerator pedal. *daas banziin* to accelerate, step on the gas.
بنزينة *banziina* /n pl *-aat*/ **1** petrol station, gas station. **2** small container for petrol.

(ب ن س)
بانس *bans* <poss Engl *pumps*> /n/ shoes (for men) without laces, slip-on shoes.
بنسة *binsa* <perh It *pinza*> /n pl *binas, binsaat*/ **1a** pair of pliers. **1b** *[elec]* hickies, conduit-bending pincers. **1c** *[print]* type-setter's tweezers. **2** hairpin, hairclip.

ب ن س ل –
بنسيلين *binsiliin* <Engl> /n/ penicillin, (loosely also) any antibiotic.

ب ن س و – see ب ر و س –: *biniswaar*

ب ن س ي ه
بنسيه *banseeh* <Fr *pensée*> /coll n/ pansy, pansies.

(ب ن س ي –)
بنسيون *bansayoon* <Fr *pension*> /n pl *-aat*/ boarding-house, small private hotel.

بونسيانا *bunsiyaana* /n/ *[bot]* poinciana.

ب ن ش
بنش *binf* <Engl> /n pl *-aat*/ bench.

ب ن ص ر
بنصر *binṣar, banṣar* /n pl *banaaṣir*/ fourth finger, ring finger.

ب ن ط
بنط، بونط *bunṭ* (also *bunt*) <It *punto*> /n pl *ʕabnaaṭ*/ **1** point (in scoring). ‖*faraqit bunṭ* to miss by a small margin, as in *ʕir-ruṣaaṣa kaanit ħa-tiigi fiyya laakin il-ħamdu li-llaaħ faraqit bunṭ* the bullet would have hit me but thank God it missed by a fraction. **2** ace (in cards). **3** *[print]* point (a unit of typefount). ‖ *bunṭ*^{i} *ʕiswid* bold type. **4** hand engraving.
بونطة، بنطة *bunṭa*^{1} <It *punta*> /n pl *bunaṭ*/ *[metal]* **1** bit (of a drill). *bunṭa wi-mlaff* bit and brace. **2** pointed cold chisel. **3** toecap.
بونطه، بنطه *bunṭa*^{2} <It *punto*> /n pl *bunaṭ*/ spot (of welding).
بنّط *bannaṭ* /vt/ **1** *[print]* to choose a type-fount for. **2** to retouch (an engraving plate). **3** *[metal]* **3a** to do spot welding to. **3b** to do projection welding to. - vn *tabniiṭ*; ava/pva *mibannaṭ*.
اتبنّط *ʔitbannaṭ* /vi/ passive of *bannaṭ*. - iva *mitbannaṭ*.

ب ن ط ل -
بنطلون *banṭaloon* (also *manṭaloon*↓) <perh Fr *pantalon*> /n pl *-aat, manaṭiil*↓/ **1** pair of trousers. *banṭaloon furt* or *banṭaloon quṣayyar* a pair of shorts. **2** *[theat]* pair of side strips of a curtain.

ب ن ط ن -
بنطنيف *banṭanṭiif* <Fr *pendentif*> /n pl *-aat*/ necklace with a medallion or pendant. - also *bandantiif*.

(ب ن ط ى)
بنطى *bunṭi*^{1} <It *ponte*> /n/ *[constr]* wooden plank two inches by twelve (used in particular for scaffolding).
بنطى *bunṭi*^{2}: *bilaaṭus il-bunṭi* Pontius Pilate.

ب ن غ ل
بنغالى *binɣaali* /adj */ Bengali. ‖*tiin binɣaali* banyan.

ب ن ف س ج
بنفسج *banafsig, banafsag* <P *banafsha*> /coll n/ violet(s).

بنفسجى *banafsigi* /adj invar/ violet (in colour). *ʕaʃiʕʕa fooq il-banafsigi*↑ ultra-violet rays.

ب ن ف ش
بنفش *banaff* <P *bunafsh*> /n/ amethyst.

(ب ن ك)
بنك *bank*^{1} <Fr *banc*> /n pl *bunuuk*/ **1** work bench. **2** shop counter.
بنك *bank*^{2} <prob Engl> /n pl *bunuuk, bunúka*↓/ bank. *ʕil-bank il-markazi* the Central Bank (of Egypt).

ب ن ك ر
بنكر *bankar* <Engl>: *xad bankar [naut]* to bunker.

ب ن ك ن -
بنكنوت *bankinoot* <Engl *bank-note*> /n/ paper money. *ʕawraq bankinoot* banknotes.

ب ن ك ى ر
بنكير *bankiir* <T *banker* from It> /n pl *banakiir*/ wealthy man.

(ب ن ك ى ك)
بنكيك *bankiik* /n/ strip of low-lying land alongside a dyke. - also *bantiik*.
بنكيك *bankeek* <Engl> /n/ pancake (make-up).

ب ن ل ى see ف ن ل ى : *banilya*

ب ن ن ١
بنّ *bunn* /coll n/ coffee bean(s). *bunn*^{i} *ʕaxḍar* unroasted coffee beans. *bunn*^{i} *mḥammaṣ* roasted coffee beans. *bunn*^{i} *ħaṣa* unground coffee beans. *bunn*^{i} *maṭḥuun* fine-ground coffee beans (for Turkish coffee). *bunn*^{i} *magruuf* (or *faransaawi*) coarse-ground coffee beans (for French-style coffee). *bunn*^{i} *niskafeeh* instant coffee. ‖ *ga-k katmit il-bunn* may you be struck dumb!
بنّى *bunni* /adj invar/ **1** brown, coffee-coloured. ‖*ħ-axalli nahaar-ak bunni* I'll give you a bad time! **2** bay (of a horse).

ب ن ن ٢
بنّ *binn* <Engl *pen*> /n pl *bunuun, bunúna*/ steel nib-holder in a pen.

ب ن ن و ر see ب ن ر : *bannuur, bannuura*

ب ن ن و ه
بنوه *bannuuh, pannuuh* <Fr *panneau*> /n pl *-aat*/ panel with moulded decorations.

(ب ن ن ى)
بنّى *binni*[1] <perh Copt> /n/ lepidotus, a Nile fish (Barbus bynni).
بنّي *binni*[2] /n/ domesticated pigeon.
بنّيّة *binniyya* /n pl *banaani, binniyyaat*/ **1** pigeon coop made of mud. **2** underwater fish-hole in an embankment.

ب ن ه ا
بنها *banha* (also *banha l-ɛasal*) /prop n/ Benha, chief town of the Qalyubiya province and a main railway station.

ب ن و ا ر
بنوار *binwaar, bunwaar* <Fr *peignoir*> /n pl *banawiir, binwaraat*/ theatre box, seats at the front of a theatre balcony when partitioned into private sections.

ب ن ى [1]
بنى *bana (i)* /vt/ to build, construct. *banu-lna madrasa f-farq il-balad* they built us a school in the eastern part of the town. *balad mabniyya ɛala tall*[a] *ɛaali* a town built on a high hill. *ʔil-baani ṭaaliɛ wil-faaḥit naazil [prov]* (the builder is going up and the digger is going down) the good flourish while the evil suffer. *ṭariiqit tafkiir-u kull-a-ha mabniyya ɛala f-fakk* his whole way of thinking is founded on doubt. - vn *buna, binaaʔ*; ava *baani*; pva *mabni*.
بنا *buna* /n/ building.
بناء *binaaʔ*↑ /n/ building, structure.
¶ *binaaʔan ɛala*↑ /prep/ on the basis of, according to. *binaaʔan ɛala kida* on this basis.
بنية *bunya, binya*↑ /n/ **1** build, physique. *saliim il-binya* of sound constitution. **2** (*binya*↑ only) *[ling]* formal structure. *binyit il-kilma* the structure of the word.
بنيان *bunyaan* /n/ style or method or quality of building.
بناية *binaaya* /n pl *-aat*/ building, construction. *binayaat gidiida* new buildings.
بنّا *banna* /n pl *-yiin*/ **1** bricklayer. ‖*banna wi-mnaawil* or *banna wi-faaɛil* (both bricklayer and passer of bricks) one who does two jobs at the same time. **2** mason. ‖*ɛuud il-banna [bot]* Lignum vitae, Guaiacum.
بنّاء *bannaaʔ*↑ /adj/ constructive. *naqd' bannaaʔ* constructive criticism.
مبنى *mabna* /n pl *mabaani*/ building.
اتبنى *ʔitbana* /vi/ to be built, be constructed. - iva *mitbini*.
انبنى *ʔinbana* = *ʔitbana*.

ب ن ى [2] see also ء ب ن [1]
بنى *bani* /pl n, always constr/ the children of, those associated with. *bani ʔisraʔiil* the Children of Israel. *bani ʃakuuf [deris]* carpenters. ‖*bani ʔaadam* /fem *bani ʔadma*, pl *bani ʔadmiin*/ a human being. - *bani sweef* Bani Suef, town and province in Upper Egypt.
بنيّ *binayy* /n/ *[women]* small boy, little lad.
بنيّة *binayya, bunayya*↑ /n pl *-aat*/ girlie, little girl.
اتبنى *ʔitbanna* /vt/ **1** to adopt as son or daughter. **2** to give patronage to (s.th. or s.o.). *laazim il-ʔafkaar ig-gidiida tlaaqi ḥadd' yitbannaa-ha* new ideas should find someone to encourage them. - vn *tabanni*; ava *mitbanni*.
تبنّى *tabanni* /n/ adoption. *ʔibn' bit-tabanni* an adopted son.

ب ن ى [3]
بونيّة *buniyya* <It *pugno*> /n pl *-aat*/ **1** blow, punch. **2** (also *buniyya ḥadiid*) brass knuckles, knuckle-duster.

ب ن ى ن
بنين *bineen* /n/ biscuit made of flour, clarified butter and salt, flavoured with sesame, fennel etc., and shaped into thin rectangles. - also *mineen*.

(ب ن ى ه)
بنيه *buneeh* <Fr *bonnet*> /n pl *-aat*/ **1** bathing cap, shower cap. **2** (also *buneeh ḥariimi*) woman's brimless hat. **3** baby's bonnet or cap.
بانيه *baneeh* <Fr *pané*> /adj invar/ *[cook]* covered with bread-crumbs.

ب ن ى و
بنيو *banyu* <It *bagnio*> /n pl *-haat*/ **1** (fixed) bath tub. **2** bath for electro-plating. *niddii-lu banyu blatiin* we plate it with platinum.

ب ن ى و ن
بنيون *binyoon* <Fr *pignon*> /n pl *-aat*/ *[mech]* pinion.

ب ه
باء *bih* /fem n, pl *-aat*/ second letter of the Arabic alphabet. - also *baaʔ, beeh*.

ب ه ب ه
بهبه *bahbah* /vi/ to speak incomprehensibly. - vn *bahbaha*; ava *mibahbah*.

ب ه ت [1]
بهت *bahat'* or *bihit (a)* /vi/ **1** to turn pale, fade. *wiff-u*

bahat mil-xoof his face turned pale with fear. *ʃil-jakitta bahatit fif-fams* the jacket faded in the sun. **2** to run (of colours). - vn *bahataan*; ava *baahit*.

بهتان *bahataan* /n/ paleness, pallor.

بهّت *bahhat, bahhit* /vt/ **1** to cause to fade. **2** to cause (colours) to run. - vn *tabhiit*; ava/pva *mibahhat, mibahhit*.

ب ه ت ²

بهت *bahat*² *(a)* /vt/ to astonish, surprise. - pva *mabhuut*.

بهتان *buhtaan* /n/ falsehood.

انبهت *ʃinbahat* /vi/ to be astonished, be surprised. - iva *minbihit*.

ب ه ج

بهجة *bahga* /n/ delight.

بهيج *bahiig* /adj */ delightful.

مباهج *mabaahig* /pl n/ delights.

اتبهج *ʃitbahag*↓ = *ʃibtahag*. - ava *mitbihig*.

انبهج *ʃinbahag*↓ = *ʃibtahag*. - vn *ʃinbihaag*.

ابتهج *ʃibtahag* /vi/ to be delighted. - vn *ʃibtihaag*; ava *mibtihig, mubtahig*↑.

ب ه د ل

بهدل *bahdil* /vt/ to dishevel, play havoc with, throw into confusion. *ma-tiqdar-fi txuffi wi-nta mbahdil kida* you can't go in looking such a mess. *bahdilti wiff-u* I gave his face a battering. *ʃil-ɣiyaal bahdilu l-ʃooda* the kids messed up the room. *ʃatam-u bahdil-u* he heaped abuse upon him and left him floundering. *ʃil-ħubbi bahdala [prov]* to love is to be thrown into confusion. *ʃil-ɣizzi bahdala [prov]* wealth is dissipation. - vn *bahdala*; ava *mibahdil*.

اتبهدل *ʃitbahdil* /vi/ to be or become dishevelled, be maltreated, deteriorate (through bad treatment). *ʃiħħit-u tbahdilit* his health was ruined. - ava/iva *mitbahdil*.

ب ه ر ¹

بهر *bahar (a, i)* /vt/ **1** to strike with awe, overwhelm. **2** to dazzle (the eyes). - vn *bahar*; ava *baahir*; pva *mabhuur*.

بهرة *bahra* instance noun of *bahar*. *ʃitbahart bahra* I was completely overwhelmed.

أبهر *ʃabhar* /adj, fem *bahra*, pl *buhr*/ albino. - also *ʃaghar*.

انبهر *ʃinbahar* /vi/ to be overwhelmed, overcome with awe. *ʃinbahar bi-gamal-ha* he was bowled over by her beauty. - iva *minbihir*.

اتبهر *ʃitbahar* = *ʃinbahar*. - iva *mitbihir*.

ب ه ر ²

بهار *buhaar* /n pl *-aat*/ spice (most commonly used in the plural to denote mixed spice).

ب ه ر ج

بهرجان *bahragaan* /n/ *[obsol]* decorative head-fringes of a bride.

بهرج *bahrag* or *bahrag* /vt/ to doll up (usually with an implication of poor taste). - vn *bahraga, bahraga*; ava/pva *mibahrag, mibahrag*.

اتبهرج *ʃitbahrag* or *ʃitbahrag* /vi/ to overdress, be overdressed, be tarted up. - ava/iva *mitbahrag, mitbahrag*.

ب ه ر ي ز

بهريز *bahriiz* <perh T *pehriz* from P> /n/ *[cook]* concentrated stock.

ب ه ظ

باهظ *baahiz* /adj */ excessive, exorbitant.

ب ه ق ¹

بهاق *buhaaq* /n/ *[path]* vitiligo alba.

مبوهق *miboohaq* /adj */ afflicted with vitiligo alba.

ب ه ق ²

باهوق *bahuuq* /n pl *bawahiiq*/ wooden frame onto which loads are fastened on a camel's back.

ب ه ل

بهل *bahal (i)* /vt/ to overwhelm. *gamal-ha bahal-u* her beauty stunned him. - vn *bahalaan*; ava *baahil*; pva *mabhuul*.

اتبهل *ʃitbahal* /vi/ to be overwhelmed, be awed. - iva *mitbihil*.

بهلى *bahli: ɛala l-bahli* **1a** unveiled (of a woman). **1b** in an immodest fashion. **2** openly, publicly.

ابتهل *ʃibtahal* /vi/ to supplicate, implore. - vn *ʃibtihaal*; ava *mibtihil*.

ابتهالات *ʃibtihalaat* /pl n/ *[Isl]* religious songs delivered, sometimes with the support of a chorus, during special celebrations, traditionally beginning with *ʃaxis-na ʃadrik-na* ... (save us, come to our rescue (O God)).

ب ه ل ل

بهللة *bahlala* /n/ astonishment.

بهلول *bahluul* /pl *bahaliil*/ **1** /n/ jester, clown, buffoon. **2** /adj/ foolish (often with religious tendencies), dervish-like.

اتبهلل *ʃitbahlil, ʃitbahlal* /vi/ to become astonished.

ʔitbahlilna ɛala ɛamayil-ha lli miʃ maqbuula di we were amazed at that unacceptable behaviour of hers. - ava *mitbahlil*.

ب ه ل و -

بهلوان *bahlawaan* <P *pahlawân*> /n pl *-aat*/ **1** acrobat. **2** tricky person.

ب ه م ١

بهيم *bihiim* /pl *bahaayim*/ **1** /n/ domestic animal (larger than a sheep), usually male. **2** /adj/ **2a** stupid. **2b** uncouth. — *bahaayim* /pl n/ **3** domestic livestock (larger than sheep). *bahaayim il-ɦaliib* dairy animals.

بهيمة *bihiima* /pl *bahaayim*/ **1** /n/ domestic animal (larger than sheep). **2** /masc and fem adj/ **2a** stupid. **2b** uncouth.

انبهم ʔinbaham /vi/ to become obscure, become unintelligible. - vn *ʔinbihaam*; ava *minbihim*.

أبهم ʔabham /vt/ to make obscure, make mysterious. *ʔabham il-ɦikaaya ɛaʃaan illi qaɛdiin* he made the matter unintelligible because of those present. - vn *ʔibhaam*; pva *mubham*.

ب ه م ٢

إبهام ʔibhaamˀ /n pl *-aat*/ thumb.

ب ه و see ب ى ه : *bahawaat, bahawaati, bahawiyya*

ب ه و ق

بهوق *bahwaq* **1** /vt/ to make (too) large or wide. **2** /vi/ to become unwieldy, become too big to manage. *ʔil-ɛamaliyya bahwaqit* the whole thing got out of hand. *fustaan mibahwaq* a loose ill-fitting dress. - vn *bahwaqa*; ava *mibahwaq*.

اتبهوق ʔitbahwaq /vi/ to become (too) wide or large. - ava *mitbahwaq*.

ب ه و ه

باهوه *bahuuh* <Fr *bahut*> /n pl *-aat*/ buffet, sideboard.

ب ه ى ١

بهى *bahi* /adj/ radiant, pleasant, full of happiness.

بهاء *baha, bahaaʔ* /n/ magnificence.

بهيّ *bahiyy = bahi. bahiyy ın-nuur* Shining with light (epithet of the Prophet Muhammad).

أبهى ʔabha /el/ more/most magnificent.

باهى *baaha* /vi/ to boast. *bi-ybaahi b-ʔeeh* what does he boast about! - vn *mubahaahˀ*; ava *mibaahi*.

اتباهى ʔitbaaha /vi/ to make a show, be boastful, be proud. *ʔil-qarɛa b-titbaaha b-ʃaɛrˀ bınt uxt-a-ha [prov]* the bald woman boasts of her niece's hair. - vn *tabaahi*; ava *mitbaahi*.

ب ه ى ٢

بوهيه *buhya* <T *boya*> /n/ decorator's oil-based paint. - also *buuya*.

بوهيجى *buhyagi* /n pl *-yya*/ **1** shoe-shine boy/man, shoe-black. **2** *[obsol]* housepainter, decorater. - also *buyagi*.

ب و ا ل

بوال *buwaal* <Fr> /n/ voile. - also *vuwaal*.

ب و ب ١

باب *baab* /n pl *ʔabwaab, bibaan*/ **1** door, gate. *baab in-naggaar mixallaɛ [prov]* (the carpenter's door hangs awry) ≈ the cobbler's children are ill-shod. *ʔil-baab il-maqfuul yibɛid il-qaḍa l-mistaɛgil [prov]* (a closed door keeps unexpected calamities distant) circumspection wards off danger. *ʔil-baab illi ygii-lak minnu r-riiɦ sidd-u wi-stirıiɦ [prov]* (close the door that lets the wind in and relax) ≈ stay away from likely sources of trouble. ‖*fatɦ' baab* just a beginning. - *ʔana ɛaayiz beet min baab-u* I want a self-contained house. - *baab il-badan* anus. - *mil-baab liṭ-ṭaaq* see *ṭaaq*. - *ɛala baab allaah* poor, living on God's mercy. - *ya baab in-nabi* invocation of el-Sayyid el-Badawi. **2** chapter, subdivision. ¶ *min baab* /prep/ by way of, out of. *min baab il-mugamla* by way of courtesy. *min baab iz-zooq* out of politeness.

بوابة *biwaaba* /n/ **1** occupation of a *bawwaab*. **2** monthly payment to a *bawwaab*.

بوّاب *bawwaab* /n */ concierge, doorkeeper. ‖*baab min ɣeer bawwaab* a chaotic state of affairs, a free-for-all.

بوّابة *bawwaaba* /n pl *-aat*/ gate, main entrance. *bawwaabit hawiis* gate of a lock. *kaatib bawwaaba* clerk who records goods arriving and leaving (e.g., in a warehouse). *bawwaabit il-mitwalli* one of the old gates of Cairo located in the now populous area of *ʔid-darb il-ʔaɦmar* (q.v.).

بوّب *bawwıb* /vt/ to classify, order. *fuɣlıt-u ybawwib il-maɛlumaat* his job is to classify the information. - vn *tabwiib*; ava/pva *mibawwib*.

اتبوّب ʔitbawwib /vi/ to be classified. - iva *mitbawwib*.

ب و ب ٢

بوبه *buuba* <It *poppa*> /n/ *[naut]* poop.

ب و ت

بوت *buut* (also *gazma buut*) <Engl> /n/ pair of boots.

ب و ت ق see ب ت ق

(ب و ج ی)

بوجي *buugi*[1] <Engl *bogie*> /n pl *bawaagi/* railway truck or carriage.

بوجي *buugi*[2] <It *poggia*> /n/ *[naut]* (a vessel's) bearing away to leeward.

ب و ح

باح *baaḥ*[1] *(u)* /vi/ to make a disclosure or revelation. *baaḥ bis-sirr* he gave the secret away. - vn *booḥ, bawaḥaan*; ava *baayiḥ*.

باح *baaḥ*[2] *(i)* /vt/ to make permissible, allow. *ʕil-ḥagaat illi bi-tbiḥ-ha l-nafs-ak* the things you allow yourself.

باحة *baaḥa* /n pl *-aat/* courtyard.

أباح *ʔabaaḥ*[↑] = *baaḥ*[2] – /the literary passive imperfect form occurs/ *ʔil-misaafir yubaḥ-lu ʔinnu yifṭar* the traveller is allowed to break the fast. - vn *ʔibaaḥa*; ava *mubiiḥ*; pva *mubaaḥ*.

إباحة *ʔibaaḥa* /n/ *[Isl law]* permissibility.

إباحي *ʔibaaḥi* /adj */ promiscuous, pornographic.

مباح *mubaaḥ* /n pl *-aat/ [Isl law]* permissible action.

استباح *ʔistabaaḥ* /vt/ to regard as permissible, consider fair game. - vn *ʔistibaaḥa*; ava *mistibiiḥ, mustabiiḥ*[↑]; pva *mustabaaḥ*[↑].

ب و خ[1]

باخ *baax (u, i)* /vi/ to become tedious, become unappealing. *ʔin-nukta bi-tbuux lamma titqaal kitiir* a joke loses its punch when it's repeated often. - vn *bawaxaan*; ava *baayix*.

بايخ *baayix* /adj */ tedious, silly, annoying.

أبوخ *ʔabwax* /el/ more/most tedious, silly or annoying.

أبيخ *ʔabyax* = *ʔabwax*.

بواخة *bawaaxa* /n/ tediousness, silliness, boorishness.

بياخة *bayaaxa* = *bawaaxa*.

بوّخ *bawwax*[1] **1** /vt/ to make tedious or boring. **2** /vi/ to be or become tedious or boring. *ma-tbawwax-ʃ*[i] *baqa* stop being such a bore! - vn *tabwiix*; ava/pva *mibawwax*.

بيّخ *bayyax* = *bawwax*[1].

استبوخ *ʔistabwax* /vt/ **1** to consider tedious or silly. **2** to select for tediousness. *ʔistabwaxt*[i] *ktaab wi-ddet-huu-lu* I selected a boring book and gave it to him. – /vi/ **3** to behave in a silly or boorish manner. - vn *ʔistibwaax*; ava/pva *mistabwax*.

استبيخ *ʔistabyax* = *ʔistabwax*. - vn *ʔistibyaax*; ava/pva *mistabyax*.

ب و خ[2]

بوخة *buuxa, booxa* /n pl *-aat/* vapour. *bi-tirfaʕ ɣaṭa l-ḥalla tʃimm*[i] *buuxit it-ṭabiix* she lifts up the saucepan lid to smell the food cooking.

بواخ *buwaax* /n/ steam, vapour.

بوّخ *bawwax*[2] /vi/ to emit steam, give off vapour. ‖ *ʔil-ʃakla di bawwaxit fi-dmaaɣ-i* ≈ the meal made me drowsy with a feeling of well-being. - ava *mibawwax*.

ب و د ق see ب د ق

ب و د ی

بودي *boodi* <Engl> /n/ bodywork (of a car).

ب و ذ see ب و ز[2]

ب و ر[1]

بار *baar*[ɜ] *(u)* /vi/ to be or become undesirable or unmarketable. *ʔil-biḍaaʕa baarit* the goods became unsaleable. ‖ *ʔil-bint*[i] *baarit* the girl became unmarriageable. - *ʔil-bayra l-beet ʔabuu-ha [prov]* (an unmarriageable woman belongs in her father's home) a faulty article should stay with its maker. - vn *bawaraan*; ava *baayir*.

بور *buur*[1] /adj invar/ **1** undesirable, unmarketable. *banaat buur* unmarriageable girls. **2** infertile. *ʔarḍ*[i] *buur* waste-land, uncultivable land.

بوراني *buraani* /adj invar/ made of dried ingredients (as opposed to fresh ones). *bamya braani* dish of okra prepared from dried okra.

بوّر *bawwar* /vt/ **1** to cause to become unusable or unmarketable. **2** to make (land) infertile. - vn *tabwiir*; a *mibawwar*.

اتبوّر *ʔitbawwar* /vi/ to become unusable or unmarketable. - ava *mitbawwar*.

ب و ر (ب و ر)[2]

بور *buur*[2] <Fr> /n/ Port (in place names). *buur saʕiid* Port Said.

بورة *buura* <It *bora*> /n/ squall.

ب و ر ص see ب ر ص[2] : *mibooraṣ*

ب و ر ق see ب ي ر ق : *bawaariq*

ب و ر ی[1]

بوري *buuri*[1] <Copt> /coll n/ grey mullet (Mugil cephalus).

بوريّة *buriyya* /unit n, pl *-aat/* a grey mullet.

بوريّاية *buriyyaaya* = *buriyya*.

ب و ر ی[2]

بوري *buuri*[2] <T *boru*> /n pl *bawaari/* **1** bugle, pipe.

2 fine blow-pipe for directing heat in delicate soldering jobs. 3 type of water-pipe resembling a *gooza* but free-standing and having a flexible smoking-tube (see Pl.I, 11).

بروجي *buruugi* <T *borucu*> /n pl *-yya*/ bugler.

ب و ز [1]

بوز *buuz* <P *poz*> /n pl *buwaaz*/ **1a** muzzle, snout (of an animal). **1b** *[derog]* mouth (of a human). *ʕiqfil buuz-ak* shut your trap! ‖*bi-yiqrab buuz* and *huwwa maadid buuz-u ʃibreen* he is pouting or sulking. - *leel wi-nhaar fi-buuz baʕḍ* ≈ they're cooped up together all the time. - *ħaṭṭ' buuz-u f-ʕibb-u* he hung his head in silent grief. - *buuz il-ʕixṣ* wet-blanket, sobersides. - *lawya buz-ha* she is scowling. - *ʁaṣbin ʕan buuz-(i) [joc]* despite (my)self. **2** /pl *ʕabwaaz, buwaaz*/ tapering tip or protuberance. *buuz gazma* toecap. *buuz ʕibra* point of a needle. *buuz ik-karafatta* the point of the tie. *zaradiyya b-buuz malfuuf* round-nosed pliers.

بوّز *bawwiz* /vi/ to pout, sulk. *miraat-i bi-tbawwiz leel wi-nhaar* my wife sulks all the time. - vn *tabwiiz*; ava *mibawwiz*.

تبويزة *tabwiiza* /inst n, pl *-aat*/ a sullen look.

ب و ز [2]

بوذا *buuza* /prop n/ Buddha.

بوذي *buuzi* **1** /n */ a Buddhist. **2** /adj */ Buddhist.

البوذيّة *ʕil-buziyya* /n/ Buddhism.

ب و ز) [3]

بوز *booz* (also *booẓ*) <prob Fr> /n pl *-aat*/ *[phot]* pose.

بوزة *booza* <It *posa*> = *booz*.

ب و س

بوس *boos* <P *bos*> /vn/ ‖*boos il-ʕayaadi diħkᵃ ʁad-duquun [prov]* the kissing of hands (i.e. the showing of excessive respect) is a mockery. - *bi-boos il-ʕideen* with great difficulty, with great effort, as in *ma-qaṭaʕt'-f it-tazkara ʕilla b-boos il-ʕideen* only with the greatest effort did I manage to buy the ticket.

باس *baas (u)* /vt/ to kiss. ‖*haat raas-ak* (or *ʕiid-ak*) *ʕabus-ha* ≈ let's make up. - *bust' ʕiid-i wiff' w-ḍahr* (I kissed my palm and the back of my hand) ≈ I gave thanks to God, I felt a sense of gratitude. - *ħ-abuus ʕiid-ak* or *ħ-abuus rigl-ak* ≈ I should be extremely grateful to you. - vn *boos*; ava *baayis*.

بوسة *boosa* /inst n, pl *-aat*/ a kiss. *boosit il-ħayaah* the kiss of life, mouth-to-mouth resuscitation. ‖*wi-fooq(-u) boosa* with expressions of gratitude too, as in *tiraggaʕ ik-kitaab wi-fooq-u ḅoosa kamaan* you have not only to return the book but also to show how grateful you are too.

اتباس *ʕitbaas* /vi/ **1** to be kissed. **2** /imperf only/ to be worthy of being kissed. *ʕiid titbaas* a hand to be kissed. - iva *mitbaas*.

انباس *ʕinbaas* = *ʕitbaas*. - iva *minbaas*.

بوّس *bawwis* /vt/ to allow or cause to kiss. *ma-ybawwis-f' ħadd' ʕiid-u* he does not let anyone kiss his hand. - vn *tabwiis*; ava *mibawwis*.

ب و س ی ر see ب س ر [2] : *bawasiir*

ب و ش [1]

بوش *booʃ'* /n/ <T *boş*, cf also Copt> /n/ play or looseness (of parts which could be more tightly adjusted). *fii booʃ fil-faraamil* the brakes are not tight. ‖*ʈiliʕ booʃ* to turn out to be nothing, turn out to be a flop, as in *kull illi ʕamal-u ʈiliʕ booʃ* everything that he did turned out to be a flop.

بوّش *bawwiʃ'* /vi/ **1** to cause a slackening or looseness. *bawwiʃna ʕal-ħabl* we slackened the rope. **2** to become slack. - vn *tabwiiʃ*; ava *mibawwiʃ*.

اتبوّش *ʕitbawwiʃ'* /vi/ passive of *bawwiʃ'*. - iva *mitbawwiʃ*.

ب و ش [2]

بوش *booʃ²* <Copt> /n pl *ʕabwaaʃ*/ size, industrial starch.

باش *baaʃ (u)* /vi/ to become soggy, dissolve. - vn *bawaʃaan*; ava *baayiʃ*.

بوّش *bawwiʃ²* /vt/ **1** to soak (s.th., e.g., bread, aspirins) so that it disintegrates. **2** to coat with size. - vn *tabwiiʃ*; ava/pva *mibawwiʃ*.

اتبوّش *ʕitbawwiʃ²* /vi/ passive of *bawwiʃ²*. - iva *mitbawwiʃ*.

ب و ش [3]

بوش *buuʃ* <Engl> /n pl *ʕabwaaʃ*/ *[mech]* bush.

ب و ص [1]

بوص *buuṣ* /coll/ reed(s) (particularly of the rigid, hollow type of Saccharum spontaneum).

بوصة *buuṣa'* /unit n, pl *-aat*/ a reed, a piece of reed. *buuṣit gooza* mouth-reed of a water-pipe (see Pl.I, 8). *labbis il-buuṣa tibqa ʕaruusa [prov]* (dress up a reed and it will become (as pretty as) a doll) ≈ clothes make the man.

ب و ص [2]
بوصة *buuṣa* [2] <Fr *pouce*> /n pl *-aat*/ inch.
بوصة *buuṣa* [3] <Fr *poussée*> /n pl *biwaṣ*/ *[naut]* pushing of a ship in a particular direction (e.g., by a tug). *buuṣa l-wara* heave astern! ‖*ɛamal buuṣa buxaar* to raise steam.

ب و ص ل see ب ص ل [2]

ب و ط ط
بوطّ *buwaṭṭ* <Fr *boîte*> /n pl *-aat*/ *[elec]* connection box.

ب و ظ [1]
باظ *baaẓ (u)* /vi/ **1** to become spoiled or useless. *ʔil-ʔakl[i] baaẓ* the food became spoiled. *ʔaɛṣaab-i baaẓit* my nerves went to pieces. *ʔil-ɛuzuuma baaẓit ɛalayya* the party was spoiled for me. *saɛt-i bayẓa* my watch is out of order. **2** to be or become corrupted. *bitt[i] bayẓa* an immoral girl. - vn *bawaẓaan, booẓa*; ava *baayiẓ*.
أبوظ *ʔabwaẓ* /el/ more/most useless.
بوّظ *bawwaẓ* /vt/ to spoil, corrupt. *zawwidt il-malḥ[i] w-bawwaẓt il-ʔakl* I put in too much salt and spoiled the food. *miin bawwaẓ il-bint[i] di* (1) who corrupted this girl? (2) who (illegitimately) deflowered this girl? - vn *tabwiiẓ*; ava/pva *mibawwaẓ*.
اتبوّظ *ʔitbawwaẓ* /vi/ to be spoiled, be corrupted. - iva *mitbawwaẓ*.

ب و ظ [2]
بوظة *buuẓa* <T *boza*> /n/ **1** *[obsol]* barley beer. ‖*dimaaɣ-i baḍit buuẓa* my mind has gone to pieces. - *di ʃirka buuẓa* this is a corrupt company. **2** /pl *buwaẓ, buẓaat*/ establishment for the sale of barley beer.

ب و ظ [3] see ب و ز [3] : *booẓ*

ب و ع [1]
باع *baaɛ [1]* /n pl *-aat, ʔabwaaɛ*/ distance from tip to tip of the outstretched arms. ‖*baaɛ(-u) ṭiwiil* (he is) adept, (he is) adroit, as in *ʔin-naas dool baɛ-hum ṭiwiil fis-sirɋa* those types are dab hands at thievery. - *bil-baaɛ wid-diraaɛ* by force.
بوع *buuɛ: ma-yiɛraf-ʃ[i] kuuɛ-u min buuɛ-u* (he doesn't know his elbow from the bones of his wrist) he cannot discriminate.

ب و ع [2]
اتبوّع *ʔitbawwaɛ* /vi/ to vomit. - ava *mitbawwaɛ*.
مباوعة *mibawɛa* /n/ vomiting.
استباوع *ʔistibaawaɛ↓* /vi/ to vomit violently. - ava *mistibaawaɛ*.

ب و ق
بوق *buuq* /n pl *ʔabwaaq*/ **1** horn, bugle. ‖*ɛiid il-ʔabwaaq* Rosh Hashana, Jewish New Year. **2** horn-shaped loudspeaker. **3** *[mus]* bell of a wind instrument (see Pl.J. 20). **4** mouth-piece. **5** conch shell.
بوّق *bawwaq* /vi/ to shout challengingly, talk in a strident voice. - ava *mibawwaq*.

ب و ك ر
بوكر *bookar* <Engl> /n/ poker (the card game).

ب و ل [1]
بال *baal [2]↑ (u)* /vi/ to urinate. - vn *bawalaan*; ava *baayil*.
بول *bool* /n/ urine.
بولي *bawli* /adj/ urinary. *masaalik bawliyya* urinary tracts.
مبولة *mabwala* /n pl *mabaawil*/ (public) urinal.
بولينا *bawliina* /n/ *[chem]* urea.
بوّل *bawwil* /vi/ to urinate. - vn *tabwiil*.
اتبوّل *ʔitbawwil* /vi/ to urinate. - vn *tabawwul↑*; ava *mitbawwil*.

ب و ل [2]
بولة *boola* /n/ round (in shooting).

ب و ل س
بولس *buulus* /prop n/ male given name. ‖*buxuur il-buulus [Chr]* incense offered during a reading from the Pauline epistles.

ب و م [1]
بوم *buum* /coll n/ owl(s). *ʔitbaɛ il-buum yiwaddii-k il-xaraab [prov]* ≈ he who takes a raven for his guide will light on carrion.
بومة *buuma [1]* /unit n, pl *-aat*/ an owl. ‖*wiff il-buuma* (1) ugly face. (2) bringer of misfortune.

ب و م [2]
بومة *buuma [2]* <It *boma*> /n/ *[naut]* boom.

ب و ن
بون *boon [1]* <Fr *bon*> /n pl *-aat*/ voucher, chit. **2** order form.
بون *boon [2]* <perh Copt> /adj invar/ deep, complicated, devious (of a person).

ب و ن ص
بونص *boonaṣ* <Engl> /n pl *bawaaniṣ*/ bonus.

ب و ه see ب ا ه : *baah*

ب و ه ق see ب ه ق ¹ : *mıboohaq*

ب و و

بوّ *baww* /n/ **1** /pl *-aat*/ stuffed effigy of a calf used to encourage a cow to let down her milk. **2** /no pl/ *[rur]* **2a** large ball of rags bound with cord. **2b** (also *ʃil-baww*) kind of hockey played with this ball (also called *rıdd* q.v.).

ب و ى

بوية *buuya* <T *boya*> /n pl *-aat*/ decorator's oil-based paint. ‖*buuyit naar* pottery glaze which requires firing. - *dahan il-hawa buuya* (he painted the air) he did the impossible. - also *buhya*.

بويجى *buyagı* /n pl *-yya*/ **1** shoe-shine boy/man, shoe-black. **2** *[obsol]* housepainter, decorater. - also *buhyagi*.

ب ى ء

بيئة *bıiʃa* /n pl *-aat*/ **1** physical environment. *talawwus il-biiʃa↑* pollution of the environment. **2** social environment. *mın bıiʃa waʈya* from a low-class environment ‖*xidmit ıl-biiʃa* the Youth Community Service.

بيئى *biiʃı* /adj/ environmental.

ب ى ا ت

بيانى *bayaati* /n/ *[mus]* mode in Arabic music beginning on D and having E half flat and B flat.

ب ى ا د

بيادة *bıyaada* <P *piyâda*> /n/ **1** /coll/ *[obsol]* infantry. **2** military drill, square-bashing. — /adv/ **3** on foot. *rawwaḥ biyaada* he walked home.

ب ى ا ن و

بيانو *biyaanu* <prob It> /n pl *-haat, -waat*/ piano.

ب ى ب

بايب *bayib* (also *baayıb*) <Engl> /n pl *-aat*/ smoker's pipe.

بيبة *biiba* <It *pipa*> /n pl *-aat*/ **1** smoker's pipe. *duxxaan biiba* pipe tobacco. **2** *[plumb]* gully trap.

ب ى ب ى

بيبى *beebi* <Engl> /n pl *-haat*/ baby.

ب ى ت ¹

بات *baat (a)* /vi/ **1** to spend the night, stay overnight. *baatıt ɛala l-ʃarʂ* she spent the night sleeping on the floor. *ʃilli nbaat fii nıṣbaḥ fu [prov]* ≈ (1) what we spend the night discussing, we find ourselves discussing in the morning. (2) we have to repeat the same things over and over again. ‖*ʃakl' baayit* (1) food from the day before. (2) stale food. - *tibaat naar tiṣbaḥ ramaad* ≈ every crisis passes with time. - *ʃirib ɛak-kitaab mayya bayta* ≈ he refuses to give the book back to its owner. **2** to fit (into s.th.). *laazim il-muftaaḥ yibaat fil-ʂifl' ɛala raḥt-u* the key should fit smoothly into the lock. **3** to repeat the year (in school or college). *baat fi-ʃuula talat siniin* he stayed three years in the first class. **4** to calm down (of the sea). - vn *bayaat, biyaat, bayataan*; ava *baayit*.

¶ *baat ɛala* to land on (s.o.), be at the expense of (s.o., of a trick, joke etc.). *ʃahi baatit ɛaleek* you were tricked.

بيات *biyaat* /vn/ ‖*ʃil-biyaat if-fitwı* hibernation.

بياتة *bayaata, biyaata* /inst n/ spending of the night.

بيت *beet* /n pl *biyuut, buyuut*/ **1** house, home. *ʂaɛadt' fil-beet ʃimbaarıḥ* I stayed at home yesterday. ‖*beet-ı beet-ak* ≈ consider my home as your own. - *guwwa guwwa - beet-ak beet-ak* cry made to drive poultry indoors. - *beet allaah* (1) the Kaaba at Mecca. (2) a place of worship. - *ʃıl-beet il-ḥaraam* the sacred precinct in Mecca. - *beeṭ laḥm* Bethlehem. - *beet il-ɛankabuut* spider's web. - *buyuut il-ʃazyaaʃ* fashion houses. - *beet il-ʃadab* or *beet ir-raaḥa↓* lavatory. - *ʃil-filuus fi-bet-ha* the money is safe and sound. - *ʃidxulu l-buyuut mın ʃabwab-ha* ≈ do things the proper way. - *xarg' beet* second-hand household effects. **2a** household. *maṣr' beet waaḥid* Egypt is one household. *ʃizzayy il-beet* how's the family? *yixrib beet-ak* ≈ God damn you! ‖*ʃahl il-beet* the family of the Prophet Muhammad. **2b** wife. *ʃasraar been raagıl wı-beet-u* secrets between a man and his wife. ‖*ɛalayya ṭ-ṭalaaq min beet-i* strong oath or asseveration. **3** container, encasement. *beet buṣla* binnacle. *beet ıl-wild* the uterus. *beet il-looḥ* shoulder (of meat). *xazuuq fi-beet-u [arch]* (bridge) pile cast *in situ*. **4a** division on a game-board. **4b** irrigation basin (in a field, see Pl.E, 19). — /pl *ʃabyaat*/ **5** verse (of poetry).

بيتى *beeti* /adj invar/ **1** domesticated (of animals). *ḥamaam beeti* domesticated pigeons. **2** home-made. *marabba beeti* home-made jam.

بيوتات *biyutaat* /pl n/ *[obsol]* aristocratic families. *min ʃabnaaʃ il-biyutaat* coming from an aristocratic family.

بيوتى *biyuuti* /adj invar/ custom-made, tailor-made. *tagliid biyuuti* custom binding.

بيّاتة *bayyaata* /coll n/ *[rur]* travellers and tradesman who are allowed to spend the night in the village guest-house.

بيّاتي *bayyaati* /adverb/ overnight, for the night. *ʕin kunt[a] ɛayiz-ha bayyaati yibqa tidfaɛ muqaddam* if you want it for the night then payment should be made in advance.

مبيت *mabiit, mubiit* /n/ overnight stop. *taṣriiḥ mubiit [mil]* overnight leave-pass.

بيّت *bayyit* /vt/ **1a** to cause to stay overnight. *ḥa-nbayyit il-firaax fil-xunn* we'll put the chickens in the coop for the night. *bi-nbayyit-ha fil-mayya* we leave them in the water overnight. **1b** to give overnight accommodation to (s.o.). *taɛaala nbayyit-ak ɛandina* come and we'll put you up at our house. **2** to cause to fit (into s.th.). *masaḥ il-xaʃaba ɛaʃaan yibayyit-ha f-rigl iṭ-ṭarabeeza* he planed the piece of wood to make it fit into the leg of the table. **3** to fix (an intention, resolution etc.). *ʃana mbayyit in-niyya ɛala s-safar min ʃimbaariḥ* I decided yesterday that I would travel. **4** to castle (the king, in chess). – /vi/ **5** to spend the night, stay overnight. *bayyitt[i] fil-mustaʃfa* I spend the night in the hospital. **6** to plot, conspire. *humma mbayyitin-lu ɛala ɛalqa* they are planning to beat him up. - vn *tabyiit*; ava/pva *mibayyit*.

¶ *bayyit ɛala* (1) to pay a day's wages in advance to (a casual labourer to secure his labour the following day), as in *miʃ maɛquul il-miqaawil bi-galaalit qadr-u ybayyit ɛala l-ɛummaal bi-nafs-u* it is inconceivable that the contractor, being the grand person he is, should go personally to book the workers for the next day. (2) to make a check on (s.o. or s.th.) for the night, as in *ʃamm-aruuḥ ʃabayyit ɛala l-firaax* I'll be off to check on the chickens for the night. (3) to put one over on (s.o.), as in *bayyit-ha ɛaleek* he had the last laugh at your expense.

تبييتة *tabyiita* /n/ **1** instance noun of *tabyiit*. **2** advance payment (to casual labourers). *bi-yiddii-hum tabyiita ɛaʃaan yiṭlaɛu f-fuɤl[i] taani yoom* he gives them a day's pay in advance to ensure that they will turn up for work the next day. **3** a game in which someone hides something in a heap of dirt or sand, divides the heap into two parts and then asks those present to guess in which part the object is hidden.

اتبيّت *ʃitbayyit* /vi/ passive of *bayyit*. - iva *mitbayyit*.

ب ي ت [2]

بيتة *biita* <It *bitta*> /n pl *biyat*/ bitt, bollard.

ب ي ت [3] see ب ي ا ت : *bayaati*

ب ي ت ت

بيتّة *bayitta* <perh It *paglietta*> /n pl *-aat*/ small pearl sequin for ornamenting a costume, paillette.

(ب ي ج)

بيج *beej* <prob Fr> /adj invar/ beige (in colour).

بيجة *beega* <prob It *piega*> /n pl *-aat*/ turn-up, cuff (of trousers).

ب ي خ see ب و خ : *baayix, ʃabyax, bayaaxa, bayyax, ʃistabyax*

ب ي د [1]

باد *baad (i)* **1** /vt/ to exterminate, eradicate. **2** /vi/ to become extinct. - ava *baayid, baaʃid[ↁ]*.

بائد *baaʃid* /adj */ extinct. ‖ *ʃil-ɛahd il-baaʃid* the pre-Revolution era in Egypt.

أباد *ʃabaad[ↁ]* = *baad*. - vn *ʃibaada*; ava *mubiid*; pva *mubaad*.

مبيد *mubiid* /n pl *-aat*/ insecticide, pesticide.

ب ي د [2] see ب ي ا د : *biyaada*

ب ي د ق

بيذق، بيدق *beedaq* /n pl *bayaadiq*/ pawn (in chess).

ب ي ر [1]

بؤرة *buʃra[ↁ]* /n pl *buʃar*/ focus, focal point. ‖ *dool buʃrit fasaad* they're a bunch of scoundrels.

بؤري *buʃri[ↁ]* /adj */ focal. *ʃil-buɛd il-buʃri* focal distance.

بير، بئر *biir* /n pl *ʃabyaar, biyaar*/ **1** well. *faḥt il-biir bi-ʃibra [prov]* digging a well with a needle. ‖ *(ma-nta ɛaarif) il-biir wi-ɤaṭaa* (well, you know) the ins and outs of it. *-sirr-ak fi-biir* ≈ your secret is safe with me. **2** shaft, manhole. *biir sillim* stair-well. *biir saqya* a brick-lined shaft in which a water-wheel is mounted.

بيّارة *bayyaara* /n pl *-aat*/ **1** manhole. **2** drainage well (of a house).

ب ي ر [2]

بيرة *biira* <It *birra*> /n/ beer.

ب ي ر ا

بيرا *biira* <It *vira*> /interj/ *[naut]* raise! heave! *biira l-muxṭaaf* up anchor!

ب ي ر ق

بيرق *beeraq* <T *bayrak*> /n pl *bayaariq, bawaariq*/ banner, standard (especially of a Sufi order).

ب ی ر و ت
بيروت *bayruut* /prop n/ Beirut.
بيروتى *bayruuti* **1** /n pl *-yya*/ a person from Beirut. **2** /adj/ coming from or pertaining to Beirut.

ب ی ر ی ا
بيوريا *bayuriya* <Engl> /n/ pyorrhoea.

ب ی ر ی ه
بيوريه *biyureeh* <Fr *purée*> /adj invar/ puréed, mashed, creamed.

ب ی ز
بيز *biiz* <T *biz*> /n pl *biyaaz*/ awl, bodkin.

ب ی ز ن ط
بيزنطة *biizanṭa* /prop n/ Byzantium.
بيزنطى *biizanṭi, bizanṭi* /adj */ **1** Byzantine. **2** futile. fruitless. *munaqʃa biizanṭiyya* a futile discussion.

ب ی ز و
بيزو *biizu* <Fr *biseau*> /n/ *[print]* **1** bevelling. **2** drilling out the background of an engraving plate.

ب ی س ب س
بيسبس *baysibs* <Engl> /n/ *[anat]* biceps. - also *baay*.

ب ی ش [1]
بيّش *bayyiʃ* /vi/ to apply a treatment or coating of size. *ħa-nbayyiʃ ɛalee* we'll treat it with size. - also *bawwiʃ*. - vn *tabyiiʃ*; ava *mibayyiʃ*.

ب ی ش [2]
بيش *beeʃ[1], biiʃ* <T *beş*> /n pl *-aat*/ five (on dice etc.). ‖*ʃeef beeʃ* half-blind.
بيش *beeʃ[2]* /n/ *[text]* a defect in cloth, occasioned by the shuttle running out of thread.
بيشة *beeʃa, biiʃa* <T *peçe*> /n pl *biyaʃ, biʃaat*/ veil of very thin material.

ب ی ص
بيص *beeṣ: fi-ħeeṣ beeṣ* at a complete loss.

ب ی ض [1]
باض *baaq (i)* /vi/ to lay an egg. ‖*baqit-lu fil-qafaṣ* good fortune just fell into his lap. - *lamma tbiiq* ((not) even if you laid an egg) ≈ no matter what you do, never. - *baaq ɛala* to long for (s.th.), be dying for (s.th.). - *ʃil-beeq baaq min taḥt' raas-u* (he was so lazy that) the eggs laid eggs under his (recumbent) head. - vn *beeq, bayaqaan*; ava *baayiq*.
بيض *beeq* /coll n/ **1** egg(s). ‖*beeq ɛuyuun* fried eggs. - *beeq ʃamm in-nasiim* hard-boiled eggs coloured for the Shamm in-Nasim festival. **2** testicle(s). ‖*beeq il-ɛigl* (1) large round yellow variety of mango. (2) hearts (in cards).
بيضة *beeqa* /n/ **1** /unit n, pl *-aat*/ an egg. *ʃil-beeqa ma-tiksar-ʃ il-ħagar [prov]* an egg can't break a stone. *ʃilli yisraq il-beeqa yisraq ig-gamal [prov]* he who steals an egg will steal a camel. ‖*qaaɛid ɛala beeqa* (sitting on an egg) on tenterhooks. - *lissa ma-ṭliɛ-ʃ' mil-beeqa* (he still hasn't emerged from the egg) he's still wet behind the ears. - *bi-yilɛab bil-beeqa wil-ħagar [prov]* (he juggles with the egg and stone) he's very adroit. - *laqet-ha beeqa mqaffara* ≈ I found it ripe for the picking, or ready for the taking. - *law kaanit il-beeqa liiha widneen yifiluu-ha ʃitneen [prov]* ≈ a problem, however small, is better shared. **2** /dual and pl *buyuuq, biqaan, beeq*/ testicle. **3** /pl *-aat*/ *[mech]* ball-joint.
بيضاوى *bayqaawi* /adj invar/ egg-shaped, oval.
بيوضة *buyuuqa* /n pl *-aat*/ **1** *[anat]* ovum. **2** *[bot]* ovule.
بيّاضة *bayyaaqa* /adj/ laying, producing eggs. *firaax bayyaaqa* laying hens.
مبيض *mabyaq* /n pl *mabaayiq*/ **1** ovary. **2** *[bot]* stamen.
اتباض *ʃitbaaq* /vi/ to be laid (of an egg). - iva *mitbaaq*.
بيّض *bayyaq[1]* /vt/ to keep (s.o.) on tenterhooks. - vn *tabyiiq*; ava/pva *mibayyaq*.
اتبيّض *ʃitbayyaq[1]* /vi/ to be kept on tenterhooks. - iva *mitbayyaq*.

ب ی ض [2]
أبيض *ʃabyaq* /adj, fem *beeqa*, pl *biiq*/ **1** white. *ʃabyaq zayy il-laban* as white as milk. *bafta beeqa* bleached calico. ‖*ħagar ʃabyaq* limestone. - *qalb-u ʃabyaq* he is good-hearted. - *waḥda la ʃabyaq wala ʃaḥmar* one who doesn't powder or paint her face. - *nahaar-ak ʃabyaq* have a good day! - *ya xabar ʃabyaq [euphem]* what bad news! - *mayya beeqa [path]* glaucoma. - *ṭabaqa beeqa [dent]* enamel. - *ʃid-daar il-beeqa* Casablanca. - *ʃil-baḥr il-ʃabyaq (il-mutawassiṭ)* the Mediterranean Sea. - *ʃil-beet il-ʃabyaq* the White House, in Washington. - *laḥma beeqa* (1) fat. (2) the flesh of poultry, game and white fish. - *zeet ʃabyaq* poppy-seed oil. - *silaaḥ ʃabyaq* any blade used as a weapon. - *dahab ʃabyaq* (1) white gold. (2) gold alloyed with silver or platinum. - *xaʃab ʃabyaq* whitewood. - *qirf' ʃabyaq* half-piastre coin. *ma-ɛanduu-ʃ la ʃabyaq wala ʃiswid* he is penniless.

ʔil-ʔirf il-ʔabyaḍ yinfaɛ fil-yoom il-ʔiswid [prov] ≈ even a little money helps when times are bad. **2** light grey (of a horse). **3** transparent (of glass etc.). — /n/ **4** blank (in dominoes).

أبيضاني ʔabyaḍaani /adj */ fair-complexioned (of males only).

بياض bayaaḍ /n/ **1** whiteness. *bayaaḍ ɛenee* the whites of his eyes. || *ʔirmi bayaaḍ-ak* cross my palm with silver! (said by fortune-tellers). - *ʔiddaa-li fiik ɛala bayaaḍ* he gave me a blank cheque. **2** white (of an egg). **3a** whitewash. **3b** plaster. **3c** size. **3d** bleach. **4** (as a euphemism for *zift* q.v.) tar. **5** tin plating. **6** mildew (as a plant disease). **7** /coll n/ edible Nile fish (Bagrus bayad).

بياضة bayaaḍa /n pl *-aat*/ **1** unit noun of *bayaaḍ* 7. **2a** blank space (in a sheet of writing, printing etc.). **2b** double blank (in dominoes). **3** dust-cover (for furniture etc.). — *bayaḍaat* /pl n/ **4** (bed or table) linen.

البياضيّة ʔil-bayaḍiyya /n/ museum of coaches and carriages in the former royal stables in Zamalek.

بيّض bayyaḍ[2] /vt/ **1** to whiten. || *bayyaḍ wiff-u-hum* he made them proud of him. **2** to bleach. **3** to whitewash. **4** to plaster. **5** to tin, cover with a film of alloy. **6** to hull (rice). **7** to produce a fair copy from a rough draft. - vn *tabyiiḍ*; ava/pva *mibayyaḍ*.

تبييضة tabyiiḍa /n pl *-aat*/ **1** instance noun of *tabyiiḍ*. **2** fair copy.

مبيّض mibayyaḍ /n */ **1** whitewasher. **2** plasterer. **3** tinner.

مبيّضاتي mibayyaḍaati /n pl *-yya*/ = *mibayyaḍ*.

اتبيّض ʔitbayyaḍ[2] /vi/ passive of *bayyaḍ*[2]. - iva *mitbayyaḍ*.

ابيضّ ʔibyaḍḍ /vi/ to become white. - ava *mibyiḍḍ*.

مبيضّة mibyaḍḍa /n pl *-aat*/ fair copy.

استبيض ʔistabyaḍ /vt/ to select for whiteness. - ava *mistabyaḍ*.

ب ي ط ر see ² ب ط ر : *biṭaar, biṭari*

¹ ب ي ع

باع baaɛ[2] *(i)* /vt/ **1** to sell. *maḥallaat bi-tbiiɛ bil-ɣaali* high-priced stores. *bi-ybiiɛ il-mayya' f-ḥaarit is-saqqayiin [prov]* (he sells water in the water-sellers' quarter) ≈ he carries coals to Newcastle. *baaɛ illi ɛuddaam-u wi-lli waraa* (he sold all he possessed) he was left without money or property. **2** to expose, betray, turn (s.o.) over, let (s.o.) down. *baɛa kida tbiɛ-ni wi-l-miin - lin-naas il-kilaab dool* is that how you give me away - and to such terrible people! — /vi/ **3** to find a good market. *ʔil-ʔusṭuwaana baaɛit kitiir* the record sold well. - vn *beeɛ, biyaaɛa*; ava *baayiɛ*.

بيعة beeɛa /inst n, pl *-aat*/ **1** a (single) sale. || *ɛal-beeɛa* or *fooq il-beeɛa* to be taken free (with purchased goods), as in *wi-xud is-samaka l-ḥilwa di min ɛandi fooq il-beeɛa* and take this nice fish from me into the bargain! **2** lot (in an auction etc.).

بياعة biyaaɛa /vn/ || *kazlak biyaaɛa [butcher]* dressing knife.

بايع baayiɛ /n */ **1** seller, salesman. **2** /also pl *bayyaaɛa*/ street hawker, vendor.

بيعة bayɛa /n pl *-aat*/ *[Isl]* act of formal acknowledgement of (a ruler's) authority.

بيّاع bayyaaɛ /n */ seller, vendor, salesman. || *ʔiḍallaɛ ɛal-bayyaaɛ* ≈ to play hard-to-get, as in *kull[i] ma ʔanadii yaakul ma-yirḍaa-ʃ tiqul-ʃ[i] b-yiddallaɛ ɛal-bayyaaɛ* whenever I call him to eat he refuses as if he's leading on a salesman.

مبيع mubiiɛ[↓] /n/ selling, sale. *ʔil-mubiiɛ bin-naqd[i] bass* cash sales only.

مبيعات mabiɛaat /pl n/ **1** sales. *mudiir il-mabiɛaat* the sales manager. **2** *(qism)* *ʔil-mabiɛaat* the sales department.

اتباع ʔitbaaɛ /vi/ to be sold. - iva *mitbaaɛ*.

انباع inbaaɛ = *ʔitbaaɛ*. - iva *minbaaɛ*.

بيّع bayyaɛ /vt/ to cause to sell. *bayyaɛuu-ni lli waraaya wi-lli ɋuddaami* they brought about my financial ruin. - a'va *mibayyaɛ*.

بايع baayaɛ /vt/ *[Isl]* to make formal acknowledgement of the authority of (a ruler). - vn *mubayɛa, mubaayaɛa*[↑]; ava *mibaayiɛ*.

مبايعة mubayɛa /n pl *-aat*/ contract of sale, bill of sale.

استبيع ʔistaḍyaɛ /vi/ to act recklessly. *ʔistabyaɛt[i] wi-staɋalt[a] ɛala ʃuul* I said damn the consequences, and resigned straight away. - vn *ʔistibyaaɛ*; ava *mistabyaɛ*.

ب ي ف

بيّف bayyif <Engl *pay off*> /vt/ to pay in full and discharge (a seaman or crew). - vn *tabyiif*; ava/pva *mibayyif*.

ب ي ك see ب ي ه

ب ي ك ا

بيكه beeka <Engl> /n pl *-aat*/ piqué (fabric).

(ب ي ك ن)

بيكون biikun <Engl> /n pl *-aat*/ beacon.

بيكن beekun <Engl> /n/ bacon.

ب ى ل ا
بيلا *beela: heela beela* and *ʃeela beela* heave! heave-ho!

ب ى ل لِ
بيل *biyill* <Fr *bielle*> /n pl *-aat*/ piston connecting-rod.

ب ى ن
بان *baan (a)* /vi/ to appear, become manifest or visible. *ʃutubiis baan fi-ʃaaxir if-ʃaariɛ* a bus came into sight at the end of the street. *ʃil-ħaqq' ybaan [prov]* truth will out. *da baayin lina* that's apparent to us. *ʃiz-zaɛal baayin ɛaleek* you're clearly upset. *waqɛit-ak bayna* you're in for trouble. ‖*ɛala wiff-ak yibaan ya maddaar il-libaan [prov]* ≈ nothing you do can be kept secret for ever. - ava *baayin, baaʃin*↑.

باين *baayin* /ava w adverbial function/ it is evident that ..., apparently. *baayin (ɛaleeha) ħa-tmaṭṭar* apparently it is going to rain. *baayin ʃinnak miʃ ħa-tnaffiz l-ittifaaq* it looks as if you are not going to implement the agreement. *baayin ʃaxuu-k miʃ ħa-ygib-ha l-barr* it seems that your brother is not going to behave reasonably.

بائن *baaʃin*↑ /ava/ ‖ *ʃiṭ-ṭalaaq baaʃin [Isl law]* the divorce is irrevocable.

بين *been*[1] /prep/ **1** between. *ʃil-ħaara been il-bank' wil-lukanda* the alley is between the bank and the hotel. *kaan fii ma been ɛafara w-xamastaafar kitaab ɛala l-maktab* there were between ten and fifteen books on the desk. ‖*beeni w-beenak* frankly speaking. - *kaanit farħaana benha w-been nafs-a-ha* she was rejoicing inwardly. - *been il-beneen* between the two extremes. - *been in-nahreen* Mesopotamia. **2** among, in the midst of. *ʃin-naas illi-nta ɛaayiʃ benhum* the people among whom you are living.

¶ *been ... wi-(been)* what with ... and ..., as in *tiɛibt' xaaliṣ been il-ɛaraayib wil-ɛiyaal* I got completely worn out, what with the relatives and the children.

بين *been*[2] /n/ ill omen. *ɣuraab il-been* bird of ill omen, one who brings bad news or misfortune.

بينين *beneen: been il-beneen* between the two extremes, taking a middle course.

بنات، بينات *benaat, banaat* /prep/ between. *xalli l-ħikaaya benatna* keep the matter strictly between us. ‖*benaat il-ʃaɛyaad* the period (noted by trademen as a slack season) between the two feasts, *ɛiid il-fiṭr* and *ɛiid-il-ʃaḍħa*.

بيّنه *bayyina* /n/ evidence, proof. *ʃil-bayyina ɛala l-muddaɛi* the burden of proof is on the plaintiff. ‖*ħaraami bala bayyina* (he is) a thief with no evidence against him, a lucky person. - *ʃil-ɛayyina bayyina* a sample shows the quality of the whole.

أبين *ʃabyan* /el/ more/most clear.

بيان *bayaan* /n pl *-aat*/ **1** communiqué, account. *bayaan ɛaskarı* military communiqué. *ʃiddii-ni bayaan ɛan xibrit-ak ıs-sabqa* give me a report on your previous experience. **2** demonstration. *bayaan ɛamali* a practical demonstration. **3** penultimate *ħagar* of a hashish-smoking session. **4**↑ rhetoric. — *bayanaat* /pl n/ **5** particulars, details. *ʃiktib-lu bayanaat if-fuɣl* write the particulars of the job for him.

¶ *bayaanan: ɛayaanan bayaanan* openly, frankly and publicly, as in *bi-yisraqu kida ɛayaanan bayaanan* they steal openly without any regard for anyone.

بيانى *bayaani* /adj/ graphic. *rasm' bayaani* a graph.

بيّن *bayyin* /vt/ **1** to reveal, make clear. *ɛafaan yibayyin il-ħaqq* in order to reveal the truth. *gihaaz yibayyin iṣ-ṣuura l-manṭiqa muɛayyana* an apparatus which shows the image of a given area. ‖*nibayyin zeen* street call of female shell-diviners. - *qumaaʃ bi-ybayyin* sheer material. - *ʃif-feex bayyin karaama* the saint has given a sign. **2**↑ to state, declare. - vn *tabyiin*; ava *mibayyin*.

اتبيّن *ʃitbayyin* /vi/ to become clear. - ava *mitbayyin*.

مباينة *mubayna*↑ /n/ difference, disharmony.

اتباين *ʃitbaayin* /vi/ to make an impressive show. *ɛaawiz yitbaayin quddaam in-naas* he wants to make a good impression on people. - ava *mitbaayin*.

تباين *tabaayun*↑ /n pl *-aat*/ difference, disharmony. *fii tabaayun been maṣaliħ-na* we have conflicting interests.

متباين *mutabaayin*↑ /adj */ different, contradictory.

أبان *ʃabaan*↑ **1** /vt/ to cause to be clear, indicate. **2** /vi/ to be obvious, clear or outstanding. *naṣr' mubiin* an outstanding victory. - vn *ʃibaana*; ava *mubiin*.

استبان *ʃistabaan, ʃistibaan*↓ /vi/ to pan out, become clear. *ʃahu l-ħaqq istabaan* truth will out. - vn *ʃistibaana*↑ ; ava *mistibiin*.

استبيان *ʃistibyaan* /n pl *-aat*/ questionnaire.

ب ى ه [1]
بيه، بك *beeh*[1] <T *bey*> /n pl *bahawaat*/ Bey, formerly a title of, and form of address and reference to, second-highest ranking officers and officials, now used loosely to indicate respect or to flatter.

بهواتى *bahawaati* /adj invar/ luxurious, grand.

بهويّة *bahawiyya* /n/ rank of Bey.

بكويّة *bakawıyya* /n/ rank of Bey.

ب ى ه [2]
بيه *beeh*[2] /fem n, pl *-aat*/ second letter of the Arabic alphabet. - also *baaʃ, bih*.

ب ى ى

بَيّ *bayy* <Engl> /n/ *[naut]* paybill.

ب ى ى ه

بييه *biyeeh* <Fr *biais*> /n/ **1** bias (in fabric). *ʃiriiṭ biyeeh* bias binding. **2** /pl *-aat*/ *[needlew]* false tuck.

ب ى ى و م

بيّومى *bayyuumi* **1** /adj pl *-yya*/ of or pertaining to the Bayyumi order. **2** /n pl *-yya*/ a Bayyumi.

البيّوميّة *ʔil-bayyumiyya* /prop n/ Sufi order named after Sayyid Ali el-Bayyumi.

ت

ت ا

تا *taa* /fem n, pl *-haat*/ third letter of the Arabic alphabet. - also *taaʕ, tih, teeh*.

ت ا ء

تاء *taaʕ* /fem n, pl *-aat*/ third letter of the Arabic alphabet. - also *taa, tih, teeh*.

ت ا ت ا

تاتا *taata* /interj/ exhortation to a child learning to walk, particularly in the phrase *taata taata xaṭṭi l-ɣataba* come on, come on till you step over the threshold.

ت ا ج see **ت و ج** : *taag*

ت ا ر ¹

تارة *taaraʔ : taara ... taara ...* /adv/ sometimes ... sometimes .... *taara yimfi wi-taara yirkab* he sometimes walks and sometimes rides.
¶ *taaratan* /adv/ sometimes.

ت ا ر ²

تار، ثأر *taar* /n/ revenge. *ḫ-aaxud bi-taar-u* or *ḫ-axallaṣ taar-u* I shall avenge him. *beeni w-beenu taar* there's a feud between him and me.

ت ا ز see **ط ا ز** : *taaza*

ت ا ش

تاشة *taaʃa* <Fr *tache*> /n/ *[cin]* hot spot.

ت ا ى

تاى *taay* /adj/ alloyed and brittle (of gold).

ت ء ت ء

تأتأ *taʔtaʔ* /vi/ to stutter over the pronunciation of the letter *t*. - vn *taʔtaʔa*; ava *mitaʔtaʔ*.

ت ب ب ¹

تبّة *tabba* <T *tepe*> /n pl *-aat, tibab*/ **1** *[mil]* wall acting as backstop behind targets on a range. *tabbit ḳarb in-naar* target area of a firing range. **2** hillock.

ت ب ب ²

استتبّ *ʃistatabbʔ* /vi/ to become stable, become firmly established. *ʃin-niẓaam istatabb* order was established. - vn *ʃistitbaab*; ava *mistitibb, mṵstatibb*.

ت ب ت see **س ب ت ¹** : *tibit, ʃatbat, tabaat, tabaata, tabiit, tabbit, ʃittabbit*

ت ب ت ب

تبتبة *tabtaba* /n/ **1** intelligence, cleverness, wittiness. **2** experience.
متبتب *mitabtib* /adj */ **1** intelligent, clever. **2** experienced. *da raagil mitabtib ɕawi f-fuvl-u* this man has really got experience in his work.

ت ب ر

تبر *tibr* /n/ gold ore. *yixalli t-turaab tibr* he (or it) turns dust into gold, he (or it) works miracles.

ت ب ر ى ه

تابوريه *tabureeh* <Fr *tabouret*> /n pl *-aat*/ stool, foot-stool.

ت ب ش ى ر see **ط ب ش ر** : *tabaʃiir, tabaʃiira, tabaʃiraaya*

ت ب ع

تبع *tabaɛ ¹ (a)* /vt/ **1** to follow, go after, tail. *ʃataari l-ḫaraami tabaɛ-ni mneen ma-ruḫt* it turned out that the

thief was following me wherever I went. *ʕitbaɛ il-buum yiwaddii-k il-xaraab [prov]* follow the owl (i.e. an evil person) and he will lead you to destruction. **2** /imperf and ava only/ to be subordinate to, be attached to, pertain to. *bi-yitbaɛ-u ɛiddit ɛummaal* a number of workers are under him. *ʕil-muʃassasa lli b-titbaɛ-ha l-mustaffayaat* the organization to which the hospitals are attached. *kull[i] da taabiɛ lil-ʃavziya wil-maʃrubaat* all this pertains to victuals and drinks. - vn *tabaɛ, tabaɛiyya*; ava *taabiɛ*; pva *matbuuɛ*.

تبع *tabaɛ*[2] preposition indicating **1** possession. *ʕik-kursi da mif tabaɛ-na* this chair doesn't belong to us. **2** affiliation. *baqeet tabaɛ il-ɛiṣaaba di* I became a member of this gang. *ʕil-maḥkama lli l-wakiil tabaɛ-ha* the court to which the legal representative belongs. *ʕiḥna tabaɛ il-qanuun raqam talattaafar* we come under Law No. Thirteen. *ʕana b-aʃtaval tabaɛ il-miɛallim* I work for the *miɛallim*. **3** accordance. *tabaɛ taḥliil-i liz-zubuun* according to my analysis of the customer. ¶ *tabaɛ ma* /conj/ according to what. *bi-yitṣarraf tabaɛ ma ttafaqtu* he acts as you agreed.

تبعيّة *tabaɛiyya* /n/ **1** citizenship. *ɛandu tabaɛiyya ʕingiliizi* he has British nationality. **2** /coll/ subject(s). *ʕil-malṭiyyiin kaanu tabaɛiyyit ʕingiltira* the Maltese were British subjects.

¶ *bit-tabaɛiyya* /adv/ subsequently, consequently.

تابع *taabiɛ*[1] /n pl *ʕatbaaɛ*/ **1** follower, supporter. *min ʕatbaaɛ ɛabd in-naaṣir* one of Nasser's followers. **2** retainer, protégé, yes-man. -/adjectivally/ *raagil taabiɛ* a submissive man.

تبّع *tubbaɛ: ɡibṭi tubbaɛ* /pl *ʕaqbaaṭ tubbaɛ*/ *[Chr]* Coptic Catholic.

تبّاع *tabbaaɛ* /n pl *-iin, tabbaaɛa*/ all-purpose truck-hand, driver's mate.

تبّيع *tabbiiɛ* /n pl *tabbiiɛa, tababiiɛ*/ = *tabbaaɛ*.

تابع *taabiɛ*[2] /vt/ **1** to follow, go in pursuit of. *ʕana tabiɛt-a-ha b-naẓar-i l-vaayit ma daxalit il-beet* I followed her with my eyes until she entered the house. **2a** to follow up, pursue. *fii mafruuq mitabɛa mil-mufattiʃ* there is supposed to be follow-up by the inspector. **2b** to keep up with. *ʕil-muḥaami laazim yitaabiɛ il-qawaniin ig-gidiida* a lawyer must keep up with the new laws. **3** to keep on doing, continue. *ʕid-duktoor laazim yitaabiɛ id-diraasa* a doctor must keep on studying. - vn *mitabɛa, mutabɛa*; ava *mitaabiɛ*.

اتّابع *ʕittaabiɛ* /vi/ to follow in succession. *sibaaq tataabuɛ* relay race. - vn *tataabuɛ*↑; ava *mittaabiɛ*.

اتّبع *ʕittabaɛ*↑ /vt/ **1** to follow, pursue. *tann-u mittibiɛ-ha l-vaayit ma wiṣlit il-maktab* he trailed her until she got to the office. **2** to adhere to, adopt (a method, policy.). *ʕiṭ-ṭuruq illi mumkin yittibiɛ-ha l-ʕinsaan* the paths which a man can follow. - /the literary passive imperf form occurs in elevated speech/ *ʕiṭ-ṭuruq illi tuttabaɛ* the paths which are (to be) followed. - vn *ʕittibaaɛ*; ava *mittibiɛ*; pva *muttabaɛ*.

استتبع *ʕistatbaɛ*↑ /vt/ to entail, engender, have as a consequence. - vn *ʕistitbaaɛ*; ava *mistatbiɛ*.

ت ب ل

توابل *tawaabil* /pl n/ hot seasonings and spices, condiments.

تبّل *tabbil* /vt/ to season, spice. - vn *tatbiil*; ava/pva *mitabbil*.

اتّبّل *ʕittabbil* /vi/ to be seasoned, be spiced. - iva *mittabil*.

ت ب ل و ن see ت ب ل و ه : *tabloon*

ت ب ل و

تابلوه *tablooh* (also *tabloon, ṭabloon*) <Fr *tableau*> /n pl *-aat, tablowaat*/ **1** panel, board. *tablooh ɛarabiyya* dashboard. *tablooh kahraba* fuse-board, meter cupboard. **2** wall picture, mural. **3** *[text]* drawframe.

ت ب ن

تبن *tibn* /n/ chopped straw. ‖*tibn aḥmar* straw of *barsiim*. - *mayya min taḥt[i] tibn* snake-in-the-grass.

تبّان *tabbaan* /n pl *tabbaana*/ *[obsol]* straw-seller.

تبّانة *tabbaana* /n pl *-aat*/ storage place for *tibn*, barn. ‖*darb* (or *sikkit*) *it-tabbaana* the Milky Way.

متبن *matban* /n pl *mataabin*/ storage place for *tibn*, barn.

متبنة *matbana* = *matban*.

ت ب ه see also ن ب ه

تبّه *tabbih* /vt/ to arouse the interest of (s.o., in s.th.). *tabbih il-waad fil-liɛba ɛafaan yixallii-ni ʕaʃtiri-haa-lu* he put the toy under the boy's nose so as to make me buy it for him. *tabbih-u fil-ḥikaaya di* get him interested in this matter. - vn *tatbiih*; ava/pva *mitabbah*.

اتّبّه *ʕittabbih* /vi/ to have one's interest aroused. - iva *mittabbih*.

ت ب و ت

تابوت *tabuut* /n pl *tawabiit*/ **1** metal scoop wheel used in irrigation (see Pl.E, 22). **2** irrigation device similar to the *saqya* (see Pl.E, 1), but which raises water by means of a metal scoop instead of a wooden water-wheel.

‖ *ʕalee ħiss' wala t-tabuut* he has a very ugly voice (especially in singing). **3** sarcophagus.

ت ب ي ه

تبيه *tabeeh* <Fr *tapis*> /n pl *-aat*/ canvas, mat (in wrestling, boxing).

(ت ت ر)

تترى *tatari* /n pl *tatar, tataar*/ a Tartar. *ʃitlammu ʕalee zayy it-tatar* they rushed upon him.

التيتر *ʃit-titr* <Fr *titre*> /n/ *[cin]* the credits.

ت ت ر ك -

تتراكورد *titrakurd* <Engl> /n/ *[mus]* tetrachord.

ت ت ك

تيتك *titik* <T *tetik*> /n pl *-aat*/ trigger (of a gun).

ت ت ن و س

تيتانوس *titanoos* <Engl> /n/ tetanus.

ت ت و ر

تتورة *tatuura* /coll n/ *[bot]* datura. - also *datuura, dahtuura, ṭaṭuura.*

ت ت ي ا

توتيا *tutya* /n/ **1a** type of collyrium with a zinc base (particularized as *tutya beeḍa*). **1b** copper sulphate (particularized as *tutya zarqa*). **2** /coll/ squid(s). — /adj invar/ **3** *[obsol]* disastrous, calamitous. *gawaaza tutya* a disastrous marriage.

ت ج ا ه see و ج ه : *tigaah, tugaah*

ت ج ر

تجارة *tigaara, tugaara* /n/ **1** trade, commerce. *tigaarit ig-gumla* the wholesale trade. *dibloom tigaara* diploma in commercial studies. ‖ *ʃit-tigaara fil-xusaara xusaara* failure breeds failure. **2** /pl *-aat*/ business, commercial venture. *ʕanduhum tigaraat fi-kull' ħitta* they have business dealings everywhere.

تجارى *tigaari, tugaari* /adj */ **1** commercial. *ʃil-ɣurfa t-tugariyya* the Chamber of Commerce. *ʃil-baħriyya t-tugariyya* the Merchant Navy. ‖ *bi-yiftaɣal tugaari* he works fast and carelessly. **2** wholesale (of price).

تاجر *taagir*[1] /n pl *tuggaar*/ **1** (male) trader, (male) merchant or dealer. *tuggaar il-muxaddaraat* narcotics dealers. *tuggaar tagziʃa* retail merchants. ‖ *tuggaar if-fanṭa* persons who traffic goods in suitcases between countries. - *ʕala ʕeen-ak ya taagir* ≈ openly, without fear or shame, as in *kaffa ḍahr-a-ha kida ʕala ʕeen-ak ya taagir* she is exposing her back for all to see. **2** opportunist.

متجر *matgar* /n pl *mataagir*/ place of business, place of commerce.

تاجر *taagir*[2] /vi/ **1** to trade, conduct commercial business, deal. *bi-ntaagir fil-biḍaaʕa l-mistawrada* we deal in imported merchandise. *taagir bi-sm-i-na* he traded using our name. *ħisaab mitagra* a trading account. **2** to take advantage, profit unscrupulously. *bi-ytaagir bil-waṭaniyya* he is exploiting nationalism. - vn *mitagra*; ava *mitaagir.*

اتّاجر *ʃittaagir* /vi/ to deal, do business. *kaanu b-yittagru fil-muxaddaraat* they were pushing drugs. - vn *ʃittigaar*[ʔ]; ava *mittaagir.*

ت ج ز

تجزة *tagza* /n/ character. *ma-luu-ʃ tagza* he's unpredictable, he's inconsistent.

ت ج و س

تجوس *taguus* /n/ *[naut]* transverse plank bridging centre of Nile sailing boat.

ت ح ت

تحت *taħt* **1** /prep, w pron suff also *taħtii-*/ beneath, below, under. *min taħt iṭ-ṭarabeeza* from under the table. *ʕimaara taħtiiha* (or *taħtaha* or *taħt' minha) garaaj* a building with a garage under it. *taħt' riyast-u* under his command. *ħaṭṭeet is-sikkiina taħt iʃ-ʃaraab* I put the knife inside my sock. *taħt il-muraqba* (1) under surveillance. (2) on parole. ‖ *taħt[a] ʃamr-ak* (I am) at your disposal! - *taħt ir-riiħ* downwind, leeward. - *taħt' min* immediately following (in age, position, ranking etc.), as in *huwwa ʃaxuu ʃilli taħt' minnu* he's his next youngest brother, *miʃ il-beet da - laʃ - ʃilli taħt' minnu* not this house but the one beyond it. - *ʃaʃiʕʕa taħt il-ħamra* infra-red rays. - *taħt il-ħisaab* on account. - *taħt iṭ-ṭalab* on demand. - *taħt il-ʃarḍ* and *min taħt il-ʃarḍ* see *ʃarḍ.* **2** /adv/ below. *humma nizlu taħt* they have gone down, they have gone downstairs. *min fooq li-taħt* from top to bottom. *ʃiṭlaʕ min taħt* come out from underneath. *nazzil raas-u l-taħt* he hung down his head. ‖ *min taħt' l-taħt* stealthily, covertly, as in *bi-ybuṣṣ' min taħt' l-taħt* he looks stealthily, *bi-yiftaɣal min taħt' l-taħt* he operates behind people's backs.

تحتانى *taħtaani* /adj */ lower. *ʃil-fakk it-taħtaani* the lower jaw.

ت ح ت ح

تحتح *taħtaħ* /vt/ **1** to budge, to move. **2** to dislocate (a

limb). - also *taɛtaɛ*. - vn *taḥtaḥa*; ava/pva *mitaḥtaḥ*.
اتّحتح ʔittaḥtaḥ /vi/ passive of *taḥtaḥ*. - iva *mittaḥtaḥ*.

ت ح ف
تحف *taḥaf (i)* /vt/ to make a present to (s.o., of s.th. precious, often used ironically). *taḥaf-ni b-hidiyya* he gave me a valuable gift. - vn *taḥafaan*; ava *taaḥif*; pva *maṭḥuuf*.
تحفة *tuḥfa* /n pl *tuḥaf*/ **1** object of rare beauty or worth, objet d'art. *tuḥaf ʔasariyya* antiquities. *ʔil-ʔaṣnaaf l-qadiima tuɛtabar tuḥaf* the old types are considered to be collector's items. **2** delightfully odd or eccentric person, card. *ʔinta tuḥfa ya-bn-i ʔaaya min ʔayaat allaah* you're a real character, my boy, a gem!
تحفجي *tuḥfagi* /n pl *-yya*/ dealer in objets d'art.
متحف *maṭḥaf* /n pl *mataaḥif*/ museum. ‖ *raagil maṭḥaf* a real character.
اتّحف ʔittaḥaf /vi/ passive of *taḥaf*. *ʔittaḥaf bi-muṣiiba* he was hit by a disaster. - iva *mittiḥif*.
أتحف ʔaṭḥaf↑ = *taḥaf*.

ت ح ي / ح ى ¹ see also
تحى *taḥḥa*↓ /vt/ **1** to salute. **2** to offer hospitality to (s.o.). *zaɛlaan ɛafaan ma-ḥadd-ʃ taḥḥaa lamma zar-na* he's annoyed because no one offered him hospitality when he visited us. - vn *taḥiyya*; ava *mitaḥḥi*.
اتحّى ʔittaḥḥa /vi/ passive of *taḥḥa*. - iva *mittaḥḥi*.

ت ح ى ² see ² و ح ى : *ʔittaḥa*

(ت خ ت)
تخت *taxt* <P *takht*> /n pl *tuxuut*/ **1** platform, dais. **2** group performing Arabic music. **3** (woman's) full posteriors. *ya taxt* flirtatious address to a woman with large posteriors.
تختة *taxta* <P *takhta*> /n pl *tuxat, tuxúta, taxtaat*/ **1** school desk and chair set. **2** blackboard.
تخت *tixit* /adj */ well-built, stout.

ت خ ت ب -
تختبوش *taxtaboof* <P *takhta-posh*> /n pl *-aat*/ *[obsol]* covered recess of the courtyard of an old house, in which guests may be entertained without entering the private rooms.

ت خ ت خ
تختخ *taxtax* /vi/ to become plump. - vn *taxtaxa*; ava *mitaxtax*.
اتّختخ ʔittaxtax = *taxtax*. - ava *mittaxtax*.

ت خ ت ر -
تختروان *taxtarawaan* <P *takhti-rawân*> /n pl *-aat*/ *[obsol]* camel-borne litter in which a bride is conveyed during the *zaffa*.

ت خ د see ء خ د : *ʔittaaxid*

ت خ ر see also ء خ ر
تاخر *taaxir* /vt/ to move aside. *taaxir rigl-ak fiwayya* move your leg (out of the way) a little. - vn *mitaxra*; ava/pva *mitaaxir*.
اتاخر ʔittaaxir /vi/ to move or be moved aside or out of the way. - ava/iva *mittaaxir*.
استاخر ʔistaaxir↓ = *ʔittaaxir*. - ava *mistaaxir*.

ت خ م
تخم *taxam (i)* /vt/ to cause (s.o.) to feel uncomfortably full of food, surfeit. *taxamt-i nafs-i bil-ʔakl* I stuffed myself with food. *ʔil-ʔakl-i taxam-ni* the food made me feel over-full. - vn *taxamaan, taxm*; ava *taaxim*; pva *matxuum*.
تخمة *taxma* /inst n/ a case of overeating.
تخمان *taxmaan* /adj */ bloated, uncomfortably full (of food).
تخمة *tuxma* /n/ indigestion resulting from over-eating. *ʔiftareena fil-ʔakl-i lamma l-waaḥid kaan ḥa-ygii-lu tuxma* we stuffed ourselves with food till we almost had indigestion.
اتخّم ʔittaxam /vi/ passive of *taxam*. - iva *mittixim*.
انتخم ʔintaxam = *ʔittaxam*.

ت خ ن
تخن، تخن *tixin, tuxun (a)* /vi/ **1** to become thick. **2** to become fat. - vn *tuxn, taxaana*.
¶ *tixin ɛala* to consider oneself too grand for, or above (s.th.). *ḥa-nitxan ɛaf-fuxl illi b-naakul minnu ɛeef* how can we despise the work by which we earn our living.
تخن، تخن *tuxn* /n/ thickness. *ɛaayiz looḥ tuxn-i kaam* how thick a plank do you want?
تخانة، بخانه *taxaana* /n pl *-aat*/ thickness. *(makanit) taxaana [carp]* thicknessing-tool, thicknesser. *taxanaat sitta milli w-xamsa milli* thicknesses of 6mm. and 5mm.
تخين، بخين *tixiin* /adj pl *tuxaan*/ **1** thick (of solids and liquids). *looḥ tixiin* a thick plank. *siluuk tixiina wi-sluuk rufayyaɛa* thick wires and thin wires. *furba txiina* thick soup, viscous soup. *ʔiqṭaɛ it-taranfaat ɛala txiin* cut the slices thick. ‖ *ɛaql-u txiin* or *muxx-u txiin* he's stupid, he's a thickhead. **2** fat. *bint-i txiina zayy il-barmiil* a girl as fat as a barrel. **3** deep (of a voice). — /n pl *taxaayin*/ **4** prominent person. *fii ṣanayɛiyya w-fii taxaayin* there

are artisans and there are big-shots.
أثخن، أثخن ʕatxan elative of *tixiin*.
متخن *mitxin* /adj invar/ beefy, solid. *mara mitxin* a buxom wench.
ثخّن، تخّن *taxxan* /vt/ **1** to thicken, (in volume or consistency). **2** to make fat. *ʕakl il-ħalawiyyaat bi-ytaxxan* eating sweet foods makes you fat. ‖*taxxan widn(-u)* to flatter (s.o.), swell (s.o.) up with (undue) praise. **3** *[carp]* to reduce (wood) to a given thickness. — /vi/ **4** to become fat. ‖*muxx-u taxxan xaaliş* he's become a complete thickhead. - vn *tatxiin*; ava *mutaxxin*↑; ava/pva *mitaxxan*.
متخّن، مثخّن *mutaxxin* /n pl *-aat*/ thickener (in industrial dyeing etc.).
اتّاخن ʕittaaxin /vi/ to act the bully, behave grossly, be brusque. *ʕinta ħa-tittaaxin ɛaleena walla ʕeeh* do you think you are going to push us around? - ava *mittaaxin*.
استتخن ʕistatxan **1** /vt/ to consider (s.o. or s.th.) fat or thick. **2** /vi/ = *ʕittaaxin*. - vn *ʕistitxaan*; ava *mistatxan*.

ت د ل ي ت
تدوليت *tiduliit* <Fr *théodolite*> /n pl *-aat*/ **1** theodolite. **2** transit-compass.

ت ذ ك see ت ز ك ي

ت ر ا see ر ء ي : *ya tara*

ت ر ا س
تراس *tiraas* <Fr *terasse*> /n pl *-aat*/ terrace.

ت ر ا ي
ترای *tiraay* <Engl> /n/ *[anat]* triceps. - also *tiraysibs*.

ت ر ب
تربه *turba* /n/ **1** /pl *turab, turbaat*/ grave, tomb. *bi-ʃaraf-i w-turbit ʕabuu-ya* by my honour and my father's grave! ‖*turba lamma tlimm-ak* ≈ drop dead! - *turba ma-lhaa-ʃ ṣaaħib* (a grave without an owner) a place with no proper order, somewhere where anything is allowed. **2**↑ (also *turba*) /no pl/ soil. **3** /pl *turab/ turbit ħaʃiiʃ* a block of hashish packaged, usually, in cloth.
ترب *turab* /pl n/ cemetery.
تربي *turabi* /n pl *-yya*/ **1** cemetery attendant and gravedigger. **2** /adj */ scavenging.
تراب *turaab* /n pl *ʕatriba*↑/ **1** dust, dirt, earth. *turaab maɛdani* metal dust, metal filings. ‖*nifs-u fit-turaab* ≈ he is very modest. - *bi-turaab il-filuus* dirt cheap. - *yaama t-turaab bi-yaakul [prov]* ≈ the grave gobbles all. - *ʕalf' min yitmanna turaab gazmit-u* anybody would be delighted with even the dust off his shoes ≈ he is a most desirable connection. **2** (also *turaab ʕaħmar*) ash. *tibaat naar tiṣbaħ turaab [prov]* ≈ here today, gone tomorrow.
ترابة *turaaba* /n/ **1** soil. **2** a speck of dust, a bit of dust.
ترابي *turaabi* /adj/ **1** of or pertaining to earth, soil or dust. *ṭuruq turabiyya* earth roads. **2** dust-coloured.
مترب *mutrib, mitrib* /adj/ dusty, dust-bearing. *ʕig-gaww' mutrib* the weather's dusty.
ترّب *tarrab* /vt/ to cover with dust or ash. *ʕil-xamasiin tarrabit id-dinya* the *xamasiin* wind covered everything with dust. - vn *tatriib*; ava/pva *mitarrab*.
اترّب ʕittarrab /vi/ passive of *tarrab*. - iva *mittarrab*.
استرب ʕistatrab /vt/ **1** to select for dustiness. *ʕil-ħumaar istatrab-lu ħitta wi-tmarrav fil-ʕarḍ* the donkey chose a dusty place and rolled on the ground. **2** to consider dusty. - ava/pva *mistatrab*.

ت ر ب ا س [1]
ترباس *tirbaas*[1] <perh Fr *trapèze*> /n pl *tarabiis/ [anat]* trapezius muscle of the back.

ت ر ب ا س [2] see ت ر ب س [1] : *tirbaas*[2]

ت ر ب ت –
تربتاتا *tarabattaata* onomatopoeic for the sound of music ≈ ta-ra-ra-boom di-ay.
تربتّي *tarabattati* nonce word for interrupting an asinine conversation.

ت ر ب ر –
تربرتر *tiribirintir* <Engl> /n pl *-aat*/ teleprinter, teletype machine.

ت ر ب ز see ت ر ب ي ز : *tarabiiz*

ت ر ب ز –
تربزين *tarabziin* <perh P *darbazîn*> /n pl *-aat, -aat/* **1** banister, railing. **2** *[naut]* bulwark. - also *darabziin*.

ت ر ب س [1]
تربس *tarbis* /vt/ to bolt. *baab mitarbis* a bolted door. ‖*muxx-u mtarbis* (1) he's a blockhead. (2) his head is feeling muzzy. (3) he's unreceptive to new ideas. - vn *tarbasa*; ava/pva *mitarbis*.
ترباس *tirbaas*[2] <perh P *dar-basta*> /n pl *tarabiis/* **1** bolt, latch. ‖*ħaṭṭ il-hamm' fit-tirbaas* he vented his rage on an innocent person or object. **2** stupidly conservative or narrow-minded person.
اتربس ʕittarbis /vi/ to be locked. - iva *mittarbis*.

ت ر ب س [2] see ت ر ب ا س [1] : *tirbaas* [1]

ت ر ب ظ see ط ر ب ي ز : *tarabeeza*

ت ر ب ن [1]
تربن *tarbin* /vt/ *[surg]* to trepan. - vn *tarbana*; ava/pva *mitarbin*.
ترِبنة *tarbana* /n pl *-aat*/ *[surg]* trephine.
اترِبن *ʃittarbin* /vi/ passive of *tarbin*. - iva *mittarbin*.

ت ر ب ن [2] see ت ر ب ي ن : *turbiina, turbiin*

ت ر ب ن -
ترِبنتينة *tarabantiina* <It *terebentina*> /n/ turpentine.

ت ر ب ي ز
ترِبيز *tarabiiz* <Engl> /n pl *-aat*/ trapeze.

ت ر ب ي ن
ترِبينة *turbiina* <It *turbina*> /n pl *-aat*/ turbine. *markib turbiina* turbine ship.
ترِبين *turbiin* <Fr> = *turbiina*.

ت ر ب ي -
ترِيبيانكو *tiribiyanku* <It *taglio bianco*> /n/ cut of meat consisting of a whole thigh muscle. - also *tilibiyanku*.

ت ر ت
تورتة *turta* <It *torta*> /n pl *-aat, turat*/ large fancy creamy cake. - also *ţurţa*.

ت ر ت ر
ترتر *tirtir* /coll n/ spangle(s), sequin(s).
ترترة *tirtira* /n pl *-aat, taraatir*/ **1** /unit n/ a spangle, a sequin. ‖*ʕeen-u zayy it-tirtira* his eyes are as (small as) sequins. - *ḥ-addii-lu fit-tirtira* I'll give it to him where it hurts most! **2** jingle (on tambourine). **3** cutting-wheel (of a glass cutter).

ت ر ت و -
ترتوار *tiritwaar, turutwaar* <Fr *trottoir*> /n pl *-aat*/ pavement, sidewalk. - also *tilitwaar, tallitwaar*.

ت ر ج م
ترجم *targim* /vt/ to translate, interpret. *targama fawriyya* simultaneous translation. - vn *targama*; ava *mitargim*.
ترجمة *targama* /n/ **1** /pl *-aat*/ translation. **2** /pl *taraagim*/ biography.
مترجم *mutargim* /n */ translator.
ترجمان *turgumaan* /n pl *-aat, taragma*/ dragoman, authorized tourist guide.
اتّرجم *ʃittargim* /vi/ to be translated. - iva *mittargim*.

ت ر خ see also ء ر خ
ترّخ *tarrax* /vt/ **1** to put a date on. *ʃana lli tarraxt il-muzakkira* I'm the one who dated the memo. **2** to spin (a yarn), tell a tale. *qaaʕid yitarrax kalaam wi-yquul ʃibn-i ʕamal wi-bn-i sawwa* sitting spinning yarns and saying 'My son did this, my son did that.' - vn *tatriix*; ava *mitarrax*.

ت ر د see م ت ر د : *matrid*

ت ر ر
ترّ *tirr, tirri* /interj/ sound used to encourage cattle to come to drink.

ت ر ز ي
ترزي *tarzi* <P *darzî*> /n pl *-yya*/ (men's) tailor, (ladies') good-quality dressmaker. *miqaṣṣ tarzi* tailor's scissors.

ت ر س [1]
ترس *tirs* /n pl *turuus, tiruus*/ **1** cog-wheel, gear-wheel, (loosely also) any small wheel or wheel-like object. *tirs wallaaʕa* striking-wheel of a lighter. *tirs ʕagala* bicycle sprocket. *sanduuq it-tiruus* gear-box. **2**↑ shield.
ترسة *tirsa*: *makaroona tirsa* pasta in the shape of small cog-wheels.
ترّاس *tarraas* [1] /n pl *tarraasa*/ *[rur]* maker of wooden gears for a *saqya*.
ترّس *tarras* /vi/ to be thrown out of gear (of cog-wheels). - also *qarras*. - vn *tatriis*; ava *mitarras*.

ت ر س [2]
ترس *taras* [1] *(i)* **1** /vt/ to insert by force, wedge, jam (s.th. into s.th.). *tarast ʃiid-i fil-xurm* I forced my hand into the hole. **2** /vi/ to jam, become jammed or wedged. *ʃil-baab taras fi-ṣbaaʕ-u* the door closed on his finger. ‖*muxx-u taaris fi-baʕq-u* he has an unreceptive mind, he is inflexible. - vn *tarasaan, tars*; ava *taaris*; pva *matruus*.
متراس *mitraas* <P *matars*> /n pl *matariis*/ **1** wooden wedge used to keep a door closed. **2a** blockhead, dolt. **2b** strong, brawny man. — *matariis* /pl n/ **3** barricades.
اترّس *ʃittaras* /vi/ to be jammed, be inserted by force. *ʃiid-u ttarasit fid-durg* his hand got caught in the drawer. - iva *mittiris*.

[3] ت ر س

ترس *tars* /n/ stern (of a ship or boat).

ترسخانة *tarsaxaana* <T *tersâḫâne*> /n pl *-aat/ [obsol]* dockyard.

[4] (ت ر س)

ترسا *tirsa*[2] /n pl *-aat/* sea-turtle.

ترس *taras*[2] /n pl *-aat/ [rur]* mature kid.

ترس *taras*[3] <T *teres*> /n pl *-aat/ [abus]* pimp.

ترّسيّة *tarrasiyya* /n pl *-aat, taraasi/* ornate donkey-saddle with stirrups and stuffed pommel.

ترّاس *tarraas*[2] /n pl *tarraasa/* driver of pack animals.

[5] ت ر س see و ر س : *turaas*

ت ر س ا ن

ترسانه *tirsaana, tarsaana* <T *tersane*> /n pl *-aat/* **1** dockyard, shipyard. **2** arsenal, cache of arms. ‖*naadi t-tirsaana* one of the top Egyptian football teams.

ت ر س ك ل

تروسكل *tirusikl* <Fr *tricycle*> /n pl *-aat/* tricycle-carrier, tricycle-cart.

ت ر س و

ترسو *tirsu* <It *terzo*> /n/ third class. *mitr' tirsu* maitre d'hotel, third class. ‖*gumhuur it-tirsu* the front row audience (in a cinema), the people in the cheap seats.

ت ر س ي ن

تراسينة *tarasiina* <It *terrazzino*> /n pl *-aat/ [obsol]* **1** terrace. **2** balcony.

ت ر ع

ترعه *tirʕa* /n pl *tiraʕ/* medium-sized irrigation canal (larger than the *ʔanaaya*). *tirʕit ṣarf* discharge canal. *tirʕit ʕiraad* feeder canal, supply canal.

ت ر ف س

ترفس *tarfas (a) [abus]* **1** /vi/ to become stout or fat. **2** /vt/ to cause to become stout or fat. *ʕil-mawadd in-nifawiyya tarfasit-ha* the starchy substances made her fat. -vn *tarfasa*; ava/pva *mitarfas*.

اترّفس *ʕittarfas* /vi/ to be made stout or fat. -iva *mittarfas*.

[1] ت ر ك

ترك *tarak (u)* /vt/ **1** to leave. *ʕutruk-u lamma yinʃaf* leave it till it dries. *ḫaaga matruuka l-taʔdiir-i* some thing left to my discretion. **2** to bequeath, leave by will. *ʕabuu tarak-lu fluus kitiir* his father left him a lot of money. **3** to neglect, disregard (especially religious obligations). *ga-lak il-moot ya taarik iṣ-ṣala [prov]* (death has come to you, you who neglect the Prayers) ≈ your sins have caught up with you (said of one suffering from his own misdeeds). – /vi/ **4** to withdraw, lose interest, become dispassionate. *kaan bi-yḥibb id-dinya w-baʕdeen tarak wi-zihid* he used to love life but then he renounced everything and withdrew from society. -vn *tark*; ava *taarik*; pva *matruuk*.

متروكات *matrukaat* /pl n/ cast-off or used articles. *ʕandi ʔamiiṣ bunni min matrukaat gidd-i* I have a brown shirt left by my grandfather.

تركة *tirka* /n pl *tarikaat/* legacy, bequest. *ḍaribit tarikaat* death-duty, inheritance tax. ‖*hiyya tirkit ʕabuu-k* do you imagine its yours by exclusive right?

اتّرك *ʕittarak* /vi/ passive of *tarak*. -iva *mittirik*.

انترك *ʕintarak* = *ʕittarak*. -iva *mintirik*.

[2] ت ر ك

ترك *tark* /coll n/ panels of highly coloured decorative appliqué work, used for the *ṣiwaan* (see Pl.H).

[3] ت ر ك

تركى *turki* **1** /adj */ Turkish. ‖*zeet turki* Turkey red oil (a sulphated castor oil used in leather manufacture). – /n/ **2** /pl *ʕatraak, tarakwa, turk/* a Turk. **3** /no pl/ the Turkish language. ‖*bi-yitkallim turki* he's talking double-Dutch.

تركيا *turkiyya, turkiya* /prop n/ Turkey.

ت ر ك و –

تركواز *turkuwaaz, tirkuwaaz, turukwaaz, tirikwaaz* <Fr> /n/ turquoise.

ت ر ك و ه

تريكو *tirikooh* <Fr *tricot*> /n/ knitting. *jakkita trikooh* a knitted jacket. *bi-thibb' tiftaʁal tirikooh* she enjoys knitting.

(ت ر ل ل)

ترلّ *tirill* /n pl *-aat/* oaf, dolt.

ترول *turull* (also *turulli*) <Engl> /n pl *turulliyaat/* **1** trolley. **2** trolleybus.

ترلّه *tirilla* <Engl>: *ʕarabiyya(at) tirilla* trailer truck(s).

ت ر ل ل –

ترللّى *taralalli* <T *terelelli*> /adj invar/ cuckoo, dotty, screwy.

ت ر ل م
ترلم *taralam* onomatopoeia for the sound of music ≈ tra-la-la. - also *ţaralam*.

ت ر ل ى
تورلى *turli* <T *türlü*> /n/ dish of mixed vegetables. - also *tulli, ţurli*.

ت ر ل ى -
ترليون *tirilyoon* <Engl> /n/ trillion, (loosely also) infinite number.

ت ر م [1]
ترم *taram (u)* /vt/ **1** to knock out (teeth). **2** to knock out the teeth of (s.o.). - vn *tarm, taramaan*; ava *taarim*; pva *matruum*.
ترمة *tarma* /fem adj/ missing (of teeth).
أترم *ʔatram* /adj, fem *tarma*, pl *turm*/ having missing teeth.
اترّم *ʔittaram* /vi/ **1** to be knocked out (of teeth). **2** to have one's teeth knocked out. - iva *mittirim*.
انترم *ʔintaram* = *ʔittaram*. - iva *mintirim*.
ترّم *tarram* /vt/ **1** to knock out (teeth). **2** to dent the cutting edge of (a saw, file, rasp etc.). - ava/pva *mitarram*.
اترّم *ʔittarram* /vi/ **1** to be knocked out or badly decayed (of teeth). **2** to be badly dented in several places (of a cutting edge). - iva *mittarram*.

ت ر م [2]
ترم *tirm* <Engl> /n/ *[acad]* school or university term. *niẓaam it-tirmeen* system by which the academic year is divided into two terms, each with its own examinations.

ت ر م ا ى see - ت ر م م : *turmaay*

(ت ر م ب)
ترمبة *turumba[1]* <It *tromba*> /n pl *-aat*/ pump. ‖*turumba kawiţ* rubber drain-plunger. - *turumbit baab* hydraulic door-operating device. - also *ţurumba, ţulumba*.
ترمبة *turumba[2]* <It *tromba*> /n pl *-aat*/ trumpet.

ت ر م ب - [1]
ترمبيطة *turumbeeţa* <T *trampete*> /n pl *-aat*/ side drum. - also *ţurumbeeţa*.
ترمبيطجى *turumbeţgi* /n pl *-yya*/ side drummer. - also *ţurumbeţgi*.

(ت ر م ب -) [2]
ترمبون *taramboon* <perh Fr> /n pl *-aat*/ trombone.
ترمبولين *tarambuliin* <prob Engl> /n pl *-aat*/ trampoline.

ت ر م ب - [3] see - ء ت ر م : *turumbiil*

ت ر م س [1]
ترمس *tirmis* /coll n/ Egyptian lupin (Lupinus termis), the seeds of which are commonly sold in the streets as a snack.
ترمسة *tirmisa* /n pl *-aat*/ **1** /unit n/ a lupin seed. **2** *[plumb]* plug cock. **3** key passage (of a lock). – /no pl/ **4** gland which supposedly forms a small lump in a boy's chest when he reaches puberty. *ţilʕit-lu t-tirmisa* he reached puberty.

ت ر م س [2]
ترمس *turmus* <Engl trade name> /n pl *taraamis*/ vacuum flask.

ت ر م س -
ترموستات *tirmustaat* <Engl> /n pl *-aat*/ thermostat.

(ت ر م م -)
ترمّاى *turummaay* (also *turmaay, turumwaay*) <Engl> /n pl *-aat*/ **1** tramway (system), streetcar (system). *ʃiʃ-ʃaariʕ illi fii t-turummaay* the street with the tramlines in it. **2** tram, streetcar. *xabaţ-u t-turummaay* he was knocked over by a tram. **3** motor-powered barge. **4** metal bell on the end of the drone pipe of the *ʃarʁuul*.
ترمومتر *tirmumitr* <Fr> /n pl *-aat*/ thermometer.

ت ر م و - see - ت ر م م : *turumwaay*

ت ر ن ا ق
ترناق *tirnaaq* <T *tırnak*> /n/ *[naut]* fluke (of an anchor).

ت ر ن ت
ترنتو *tirantu* <It *tirante*> /n/ *[obsol]* loop of leather on the heel of a shoe used to pull it on.

ت ر ن ج
ترنج *turung* /coll n/ *[bot]* Adam's apple(s) (Citrus medica var. cedrata). - also *ʃutrung*.
ترنجة *turunga* /n/ **1** /unit n, pl *-aat*/ an Adam's apple. **2** /no pl/ frieze design used in tent appliqué work (see Pl.H, 27).
ترنجاية *turungaaya* = *turunga*.

(ت ر ن ج -)
ترنجان *turungaan* <P *turungân*> /n/ lemon balm (Melissa officinalis).
ترنجيله *turungeela* /n/ a game played with marbles, in which the target marbles are placed in the shape of a triangle.

ت ر ن ز -
ترنزستور *taranzistur* <Engl> /n pl *-aat*/ transistor. ‖*raagil taranzistur [derog]* very small man, pip-squeak.

ت ر ن س
ترانس *tarans* <Engl> /n pl *-aat*/ *[elec]* transformer.

ت ر ن س - [1]
تارنيستان *tarnistaan* <Engl *turn astern*> *[naut]* order given to boat's engineer to move astern.

ت ر ن س - [2]
ترانسيت *taransiit* <prob Fr> /n/ **1** transit. **2** transit area (in an airport).

ت ر ن ش
ترانش *taranʃ* <Fr *tranche*> /n pl *-aat, -aat*/ slice. ‖*sikkiinit taranʃ* carving knife.

ت ر ن ق see ت ر ن ا ق : *tirnaaq*

ت ر ن ك
ترنك *tarank* or *tarank* <Engl> /n pl *-aat*/ **1** trunk telephone system. **2** trunk telephone call, long distance call.

ت ر ن ه -
تارنيهيت *tarnihiit* <Engl *turn ahead*> *[naut]* order given to boat's engineer to move ahead.

ت ر ن ى ش
ترنيشة *tarneeʃa* /n pl *-aat*/ handle of a tap or faucet.

ت ر ه
ترّهة *turraha↑* /n pl *-aat*/ falsehood.

ت ر و س
تروس *tarwis* /vi/ to make a surrounding wall, fence etc., make a frame (around s.th.), for protection. *tarwis ʕala l-ʕimḍa ʕaʃaan tibaan* draw a line round the signature so that it stands out. - vn *tarwasa*; ava/pva *mitarwis*.
ترويسة *tarwiisa* /n pl *tarawiis, tarwisaat*/ **1** surrounding wall, fence etc. **2** flourish or line drawn round a signature to make it stand out.
اتّروس *ʕittarwis* /vi/ (impersonal) passive of *tarwis*. *mittarwís ʕalee* well-guarded. - iva *mittarwis*.

ت ر ى س
تريس *tiriis* <Gr *treis*> /n pl *-aat*/ three (in cards).

ت ر ى س -
تريسبس *tiraysibs* <Engl> /n/ *[anat]* triceps. - also *tiraay*.

ت ر ى ق [1]
تريقة *taryaqa* /n/ mockery.
اتّريق *ʕittaryaq* /vi/ to make a mock, poke fun. *ʕinta b-tittaryaq ʕalayya* are you making fun of me? - vn *taryaqa*; ava *mittaryaq*.

ت ر ى ق [2]
ترياق *tiryaaq* /n/ antidote, theriac.

ت ر ى ن ت
ترينتو *taryantu* /n/ *[Chr]* triangle (musical instrument) used to accompany chants and hymns in the Coptic church.

ت ز ا ن
تزانة *tazaana* /n/ whitewood planking. - also *latazaana, laṭazaana*.

ت ز ج
تزجة *tazga* <T *tezgâh* from P> /n pl *tizag*/ work bench. *mangala tazga* vice.

ت ز ك ى
تذاكيّة *tazakiyya* <Gr *theotokia*> /n pl *-aat*/ *[Chr]* hymn to the Virgin Mary.

ت ز ل ك
تزلك *tuzluk* <T *tozluk*> /n pl *tazaalik*/ **1** (leather) leggings or gaiters. *gazma b-tuzluk* a pair of high boots. **2** section of appliquéed sailcloth used as a partition in a *ʂiwaan*.

(ت س ت)
توست *tust* <Engl> /n/ **1** toast. **2** *(ʕeef) tust* sandwich-loaf, rectangular loaf of bread.
تست *tist* /n pl *-aat*/ human pyramid (in acrobatics).

ت س ع
تسع *tusʕ* /n pl *ʕitsaaʕ*/ one ninth, ninth part.

تسعة *tisʕa* /num: in absol state, in apposition, or w foll n sing in contexts of ordering and itemizing; pl *-aat*/ nine. *ʃis-saaʕa tisʕa* nine o'clock. *xumsumiyya w-tisʕa* five hundred and nine. *ʃil-ʕiyaal tisʕa* the children are nine (in number). *ʕiyal-ha t-tisʕa* her nine children. *tisʕa saar* nine piastres. *haat tisʕa biira* bring nine beers! ‖*yoom tisʕa min ʃahr*^{i} *tisʕa* the ninth of September. *-kull-i-na wlaad tisʕa* (we are all born after nine months' pregnancy) ≈ we are all equal.

¶ *tisʕaat (tisʕaat)* /adv/ in nines, nine at a time.

تسع *tisaʕ* /num: in constr w foll n pl; usu *tisaʕt* when followed by n pl ordinarily w initial hamza/ nine. *tisaʕ banaat* nine girls. *tisaʕt ʃuhur* nine months. *tisaʕt alaaf* nine thousand.

تاسوعة *tasuuʕa* /n/ ninth day of the month of Muharram.

تاسع *taasiʕ* /adj/ ninth. ‖*fit-taasiʕ* in the ninth (month of pregnancy).

تسعتاشر، تسعة عشر *tisaʕtaaʃar* **1** /num pl *-aat*/ nineteen. **2** *ʃit-tisaʕtaaʃar* /adj invar/ the nineteenth.

تسعين *tisʕiin* **1** /num pl *-aat*/ ninety. **2** *ʃit-tisʕiin* /adj invar/ the ninetieth.

تسعمائة *tusʕumiyya* **1** /n pl *-aat*/ nine hundred. **2** *ʃit-tusʕumiyya* /adj invar/ the nine-hundredth.

تسّع *tassaʕ* /vi/ to reach the ninth day (after a birth, marriage or death). - ava *mitassaʕ*.

ت ش ش

تشة *tiʃʃa* <Copt> /adj invar/ fat, corpulent, plump.

ت ش ى ك

تشيكى *tiʃiiki* **1** /adj/ Czech. **2** /n */ a Czech. **3** /n no pl/ the Czech language.

ت ع ا ل

تعال *taʕaala*^{1} /imper, fem *taʕaali*, pl *taʕaalu*/ come! come on! *taʕaala bukra* come tomorrow! *taʕaala niskar* let's get drunk!

ت ع ب^{1}

تعب *tiʕib (a)* /vi/ **1** to become tired, become worn out. *ʃana tiʕibt*^{i} *w-laazim ʃanaam* I'm exhausted and must sleep. *ʃil-mawatiir bitaaʕit it-taksiyaat bi-titʕab bi-surʕa* taxi engines wear out quickly. **2** to put oneself to trouble, put oneself to inconvenience. *yaama tʕibt*^{i} *l-ṣalḥ-u w-dilwaqti b-yinkir* how often I've put myself out on his behalf and now he denies it! **3** to suffer discomfort. *ma-tʕibt*^{i}*-ʃ ʕawi fil-ẇilaada* I didn't suffer much pain when I had the baby. - vn *taʕab*; ava *taʕbaan*.

تعب *taʕab*^{1} *(i)* /vt/ **1** to tire, wear out. *ʃif-fuvl*^{i} *taʕab-ni* the work tired me out. **2** to put to trouble or inconvenience. *ʃamal-i m-akun-ʃ*^{i} *taʕabt-ak* I hope I haven't been any trouble to you. **3** to cause discomfort or suffering. *ʃiʃ-ʃiiʃa b-titʕib is-sidr* the narghile causes chest pains. - vn *taʕab, taʕabaan*; ava *taaʕib*.

تعب *taʕab*^{2} /n/ inconvenience. *ma-fii-ʃ taʕab* it's no trouble at all. ‖*taʕab-ak raaḥa* (the inconvenience you cause is ease) ≈ it's a pleasure.

أتعاب *ʃatʕaab* /pl n/ fees.

تعبان *taʕbaan* /adj */ **1** tired, worn out. *ʃana taʕbaan min sahrit ʃimbaariḥ* I'm tired from last night's party. ‖*ʃaxṣiyyit-u taʕbaana* he has a weak personality. **2** sick, ill. *taʕbaan ʃiwayya* not very well. ‖*muxx-u taʕbaan* he's a bit crazy. **3** poor, wretched, pitiable. *muwaẓẓaf taʕbaan wi-ʏalbaan zayy*^{i} *ḥalaat-i* a poor, unfortunate civil servant like me. **4** of poor quality. *xaṭṭaaṭ taʕbaan* a bad calligrapher. *ʃarḍ*^{i} *taʕbaana* infertile land. *film*^{i} *taʕbaan ʕawi* a lousy film.

أتعب *ʃatʕab*^{1} /el/ more/most tired.

متاعب *mataaʕib* /pl n/ troubles, burdens, worries, difficulties.

أتعب *ʃatʕab*^{2}↑ /vt/ to tire. - ava *mutʕib*.

متعب *mutʕib* /adj */ tiring, tiresome. *ʃis-sillim huwwa lli mutʕib* it's the stairs that are tiring. *ya salaam da-nta walad mutʕib giddan* goodness! aren't you a tiresome boy!

استتعب *ʃistatʕab* /vt/ to consider (s.th.) too tiring. - ava/pva *mistatʕab*.

ت ع ب^{2}

تعبان، ثعبان *tiʕbaan* /n pl *taʕabiin*/ **1** snake. *zayy it-tiʕbaan yuqruṣ wi-yilbad* like a snake, biting and lurking (said of a snake-in-the-grass). *ʃilli ʕaraṣ-u t-tiʕbaan yixaaf mil-ḥabl [prov]* he whom the snake has bitten fears the rope. ‖*tiʕbaan il-baṭn [path]* roundworm. *-raas tiʕbaan* motif in tent appliqúework (see Pl.H, 12). **2** *tiʕbaan il-baḥr* or *samak tiʕbaan* eel.

ت ع ت ع

تعتع *taʕtaʕ* /vt/ **1** to budge, move. **2** to dislocate (a limb). - also *taḥtaḥ*. - vn *taʕtaʕa*; ava/pva *mitaʕtaʕ*.

متعتع *mitaʕtaʕ* /adj/ unsteady on one's feet, tottery.

اتّعتع *ʃittaʕtaʕ* /vi/ passive of *taʕtaʕ*. - iva *mittaʕtaʕ*.

ت ع س

تعس *taʕas (i)* /vt/ to make unhappy or miserable. *ʃilli taʕas-u zamaan-u yirkab ʃutubiis* it's an unfortunate man who has to go by (public) bus. - vn *taʕaasa, taʕasaan*; ava *taaʕis*; pva *matʕuus*.

متعوس *matʕuus* /adj pl *mataʕiis*/ unlucky and wretch-

ed, doomed to failure. ‖ *ʕil-matʕuus matʕuus wa-law ʕallaqu ʕala raas-u fanuus [prov]* ≈ an unlucky man stays unlucky no matter what chances he gets. - *ʕitlamm il-matʕuus ʕala xaayib ir-raga* the wretched man comes together with the hopeless one (said to abuse an association between two persons). - *ʕil-ʕaruusa lil-ʕariis wig-gary' lil-mataʕiis [prov]* the bride is for the groom but those who have exhausted themselves (preparing the marriage) only have trouble (i.e. involving oneself in what is essentially other people's business only brings problems).

تعيس *taʕiis* /adj pl *tuʕasa*/ miserable.

أتعس *ʕatʕas* /el/ more/most miserable or unhappy. *min ʕatʕas maxaliiq illaah* one of the most wretched of creatures.

انتعس *ʕintaʕas* /vi/ to be made unhappy, wretched or miserable. - iva *mintiʕis*.

ت ع ل ب

تعلب، ثعلب *taʕlab* /n pl *taʕaalib*/ fox.

تعلبة، ثعلبة *taʕlaba* /n/ **1** foxiness, slyness, cunning. **2** *[path]* Alopecia areata, fox-evil (a nervous disorder causing small round patches of baldness).

اتّعلب *ʕittaʕlab* /vi/ **1** to become foxy, cunning or sly. **2** to behave foxily, cunningly or slyly. - ava *mittaʕlab*.

ت ف

تفة *tifa* /n pl *-waat*/ ichneumon. - also *tifaawa, tifiwwa*.

ت ف ا و

تفاوة *tifaawa* /n pl *-aat*/ ichneumon. - also *tifa, tifiwwa*.

ت ف ت

تفته *tifta* /n/ red powder used for colouring food. *ʕaḥmar tifta* pale red.

ت ف ت ا ه

تفتاه *taftaah* <Fr *taffetas*> /n/ taffeta.

ت ف ت ف

تفتف *taftif* /vi/ to spit or splutter while talking. - vn *taftafa*; ava *mitaftif*.

تفتوفة *taftuufa* /n pl *tafatiif*/ **1** *[slang]* cigarette. **2** a small piece. *taftuufit laḥma* a small piece of meat.

ت ف ح

تفّاح *tuffaaḥ, tiffaaḥ* /coll n/ apple(s).

تفّاحة *tuffaaḥa, tiffaaḥa* /unit n, pl *-aat*/ an apple. *tiffaaḥit ʕaadam* the Adam's apple. ‖ *tiffaaḥit ṣaari [naut]* wooden cap on the top of a mast.

تفّاحي *tuffaaḥi, tiffaaḥi* /adj/ apple-like. *xadd-a-ha ʕaḥmar tuffaaḥi* she has apple-red cheeks. ‖ *ʒatuun tuffaaḥi* variety of large green olive for pickling.

ت ف خ

تفّخ *taffax* **1** /vt/ to cause to swell. *ʕenee kaanit mitaffaxa min kutr il-ʕiyaaṭ* his eyes were swollen from much weeping. **2** /vi/ to become swollen. - vn *tafiix*; ava/pva *mitaffax*.

اتّفخ *ʕittaffax* /vi/ to be made to swell. - iva *mittiffix*.

ت ف ش

تفشجي *tufaʃgi* <T *tüfekçi*> /n pl *-yya*/ armourer (in the police and the army). - also *tufakfi*.

ت ف ف

تفّ *taff (i)* /vt/ to spit. *fi-blaad barra ḥatta t-taff' b-filuus* abroad it costs you money even to spit. ‖ *tiff' f-wiff-i law* you may spit in my face if (such-and-such an unlikely thing happens), as in *ʕibqa tiff' f-wiff-i law ʕana ʁalṭaan* ≈ I'll eat my hat if I'm wrong! - *tiff' min buqq-ak* ≈ don't say such things (said to one who blasphemes or mentions something ill-omened). - *taffiin fi-buqq' baʕḍ* (it's as if) they have conspired together. - *ʕilli ytiff' taffa ma-yilḥas-haa-ʃ [prov]* (one does not lick what one has spat) what has been cast away should be left alone, what's done is done. - vn *taff, tafafaan*; ava *taafif*; pva *matfuuf*.

تفّة *taffa* /n pl *-aat*/ **1** instance noun of *taff*. **2** gob of spittle.

تفاف *tifaaf* /n/ spittle.

تفافة *tifaafa* /n/ spittle.

متفّة *mitaffa* /n pl *-aat*/ spittoon.

ت ف ك

تفكجي *tufakfi* <T *tüfekçi*> /n pl *-yya*/ armourer (in the police and the army). - also *tufaʃgi*.

توفكخانة *tufakxaana* <T *tüfekḫâne*> /n pl *-aat*/ *[obsol]* gun factory.

ت ف ل

تفل، ثفل *tifl* /n/ fibrous vegetable sediment, dregs. *tifl ʃ-ʃaay* tea dregs.

تفّل، ثفّل *taffil* /vi/ to become fibrous. *ʕil-lift' ʃaax wi-taffil* the turnips became old and woody. - ava *mitaffil*.

ت ف ه

تفاهة *tafaaha* /n pl *-aat*/ triviality.

تافه *taafih* /adj/ trivial, insignificant.

أتفه *ʕatfah* /el/ more/most trivial or insignificant.

ت ف و see ت ف and ت ف ا و and ت ف و و
tifa, tifaawa, tifiwwa

ت ف و ه
تفوه *tifuuh, tifuww* onomatopoeia for the sound of spitting, indicating disgust. *tifuuh (ʕaleek)* ≈ how disgusting (you are)! *ʕeen-i fii wi-tfuww[a] ʕalee [prov]* I have my eye on it and how disgusting it is! (said in running down what one secretly desires). - also *ʃitfuuh, ʃitfuww*.

ت ف و و
تفوّة *tifiwwa* /n pl *-aat*/ ichneumon. - also *tifaawa, tifa*.

ت ق ا و see [2] ت ق ى : *taqaawi*

ت ق ب
ثقب، تقب *taqab (i)* /vt/ to drill or bore. - vn *taqb, taqabaan*; ava *taaqib*; pva *matquub*.
ثقب، تقب *tuqb, suqbˆ* /n pl *tuquub, suquubˆ*/ hole.
مثقاب، متقاب *mitqaab* /n pl *mataqiib*/ **1** any device for drilling or boring. **2** skirt chaser.
انثقب *ʃittaqab* /vi/ to be drilled or bored. - iva *mittiqib*.

ت ق ل
ثقل، تقل *tiqil (a)* /vi/ **1** to become heavy. *bi-yʃarrabu l-farxa mayya ktiir ʕaʃaan titqal fil-wazn* they give the chicken a lot of water to drink so it will weigh more. ‖ *ʃil-ħarr[i] xalla dmaaɣ-i titqal* the heat made my head feel muzzy. *quddaam il-mudiir lisaan-i b-yitqal* I get tongue-tied in front of the boss. **2** to become burdensome, become difficult. *ma-tsib-ʃ il-waagib yitqal ʕaleek* don't let the homework get on top of you. *ħasseet ʃinn[i] samaʕ-i tiqil* I felt hard of hearing. **3** to act reserved, play it cool. *balaaʃ tuql[i] baqa* enough of this coyness! *da b-yitqal ʕalayya* he plays hard-to-get with me. *ʃit-tuql[i] ʂanʕa* playing hard-to-get is an art. ‖ *ʃitqal ʕar-ruzz (lamma yistiwi)* ≈ have patience! take it easy! - vn *tuql, taqalaan*; ava *taqlaan*.
ثقل، تقل *tuql* /n/ **1** weight, heaviness. *naxx[i] miṅ it-tuql* it gave way under the weight. ‖ *lissa t-tuql[i] wara* the best is still to come. **2** weight, object used in weighing. **3** *[naut]* hand lead.
أثقال *ʃasqaalˆ* /pl n/ weights for weight-lifting. *ħaml il-ʃasqaal* weight-lifting.
ثقل، تقل *taqal* /n/ weight, object used for weighing down. *taqal lif-faduuf* counterpoise for the shadoof.
ثقلة *taqala = taqal*.
ثقيل، تقيل *tiqiil* /adj pl *tuqaal*/ **1** heavy, weighty. *maʕmuul min in-naħaas it-tiqiil* made of heavy copper. *tiqiil wi-xafiif it-tiqiil* heavyweight and light-heavyweight (in boxing and wrestling). ‖ *geeb-u tqiil* he's well-off. - *tiqiil il-lisaan* slow and indistinct of speech. - *ʃir-raagil da xebt-u tqiila* that man is a total flop. - *ʃiid-u tiqiila* he is clumsy. **2** thick, heavy. *ʃaay tiqiil* strong tea. *ʃarbaat tiqiila* syrup which is (too) highly concentrated. *misaqqaʕa tqiila* heavy (greasy) moussaka. ‖ *ʃaxx it-tiqiila* to defecate. **3** difficult, burdensome. *ʃil-waagib da tqiil ʕalayya* that homework is difficult for me. *tibqa tqiila minni law ṭalabt[i] minha l-xidma di* it would be expecting too much if I were to ask her for such a favour. ‖ *tiqiil (id-damm)* dour, boorish, unpleasant. - *tiqiil is-samʕ* hard of hearing. **4a** coy. **4b** phlegmatic, cool. **5** /also pl *taqaayil*/ prominent, notable (of persons). *luṣuṣ taqaayil* big-time thieves.
أثقل، أتقل *ʃatqal* /el/ more/most heavy, more/most burdensome. ‖ *ʃatqal mil-hamm[a] ʕal-qalb* more than can be tolerated.
ثقال، تقال *tuqqaal* /n pl *-aat*/ counterpoise (notably a sliding counterpoise on a steelyard).
ثقالة، تقالة *tuqqaala* /n pl *-aat*/ weight, object used for weighing down. *tuqqaalit waraq* paperweight. *tuqqaalit is-saaʕa* clockweight.
ثقيلة، تقيلة *tuqqeela* /n pl *-aat*/ weight, object used for weighing down. *tuqqeela lil-waraq* paperweight.
مثقال، متقال *mitqaal* /n pl *mataqiil*/ unit of weight equal to twenty-four carats or 72.223 English grains.
ثقّل، تقّل *taqqal, taqqil* /vt/ **1** to make heavy, make burdensome. *ma-ttaqqil-ʃ il-ħiml[a] ʕal-ʕarabiyya* don't put too heavy a load on the car! ‖ *taqqil damm-u* he behaved in a deliberately boorish and unpleasant way. - *taqqal rigl-ak* (1) don't walk so fast. (2) be patient. **2** to size (e.g., textiles). — /vi/ **3** to lean heavily. *ma-ttaqqil-ʃ[i] ʕal-qalam* don't press (too) hard on the pencil! ‖ *ʃiwʕa ʃakuun taqqilt[a] ʕaleek* I hope I've not been too much trouble. **4** to go to excess (especially in drinking alcohol). *taqqilt[i] fiʃ-furb* I had too much (alcohol) to drink. *taqqilt imbaariħ* I had a heavy night last night. *taqqilt[i] fin-noom* I slept too long. **5** to wear warm clothes. *laazim titaqqil lamma tuxrug* you must put on something warm when you go out. - vn *tatqiil*; ava/pva *mitaqqal, mitaqqil*.
متقلات، مثقلات *mitaqqalaat* /pl n/ heavy goods.
تاقل *taaqil* /vt/ to set an equivalent in weight. *law taqil-ni bid-dahab* even if he pays me my weight in gold (I won't do what he wants). - vn *mitaqla*; ava/pva *mitaaqil*.
اتاقل *ʃittaaqil* /vi/ **1** to be equalled in weight. ‖ *ʃinta b-tittaaqil bi-ʕaʃar riggaala* you're the equal of ten men. **2** to play hard-to-get. - ava/iva *mittaaqil*.

استثقل *ʔistaṯqal, ʔistaṯqil* **1** /vt/ to consider (too) heavy or weighty. ‖ *ʔana b-astaṯqil damm-u* I consider him boorish. **2** /vi/ to behave in a brusque or high-handed manner. - vn *ʔistiṯqaal*; ava/pva *mistaṯqal, mistaṯqil*.

ت ق ن

تقن *taqan (i)* /vt/ **1** to do (s.th.) well. *laazim titqin-li l-badla ɛal-ʔaaxir* you must make the suit a perfect fit. **2** /imperf only/ to be an expert in. *bi-yitqin il-ɛarabi* he knows Arabic well. - vn *taqn, taqanaan*; ava *taaqin*; pva *matquun*.

تقن *tiqin* /adj */ meticulous (usually in manual work). *ʔil-fallaaḥ it-tiqin illi faddaan-u ma-yirmii-ʃ ʔaqall' min ɛaʃar ʔaraadib ʏalla* the meticulous peasant is he whose land yields not less than ten ardebs of wheat per feddan.

أتقن *ʔatqan, ʔatqanˀ = taqan*. - vn *ʔitqaanˀ*; ava *mutqin*; pva *mutqan*.

إتقان *ʔitqaanˀ* /n/ exactitude, precision, accuracy.

اتقن *ʔittaqan* /vi/ to become or be made exact, precise, or perfect. - vn *ʔittiqaan*; iva *mittiqin*.

ت ق و [1] see **ت ق ى** [1]: *taqwa*

ت ق و [2] see **ت ق ى** [2]: *taqaawi*

ت ق ى [1] see also **و ق ى** [1]

تقى *taqi* /adj pl *ʔatqiya, ʔatqiyya*/ pious, God-fearing.

تقوى *taqwa* /n/ devoutness, piety.

أتقى *ʔatqa* /el/ more/most pious or God-fearing.

اتّقى *ʔittaqa* /vt/ **1** to fear (God). *ʔittiqi llaah fi-ṣiḥḥit-ak* value your health (as a gift of God)! **2** to be wary of. *ʔittiqu daɛwit il-maẓluum [prov]* beware of (bringing upon yourself) the curse of the oppressed! *ʔittiqi ʃarra man ʔaḥsanta ʔilee [prov]* beware of the evil (i.e. ingratitude) of those to whom you have done good! - ava *mittiqi*.

ت ق ى [2]

تقاوى *taqaawi* **1** /pl n/ seeds (for sowing). **2** /n/ *[deris* diminutive version (of s.th.). *taqaawi raagil* a pint-sized man.

تقّى *taqqa* /vt/ to sow (land). - vn *tatqiyya*; ava/pva *mitaqqi*.

اتّقى *ʔittaqqa* /vi/ to be sown (of land). - iva *mittaqqi*.

ت ك ا ت

تكات *tikaat* /n/ mounting of a scoop on a water-wheel.

ت ك ت

تيكيت *tikit* <Engl *ticket*> **1** tag, label. *nisi yiḥuṭṭ it-tikit ɛaʃ-ʃanṭa* he forgot to put the label on the bag. **2** collection slip, ticket. *ʔit-tikit bitaaɛ it-tanturleeh* the ticket for the dry-cleaning.

ت ك ت ك [1]

تكتك *taktiḳ*[1] /vi/ to tick, go tick-tock. *ʔalb-i bi-ytaktik* my heart is beating hard. ‖ *taktik ɛat-tilifoon* to jiggle the telephone to get a connection. - vn *taktaka*; ava *mitaktik*.

اتّكتك *ʔittaktik*[1] /vi/ to be made to tick or click. *sinaan-i ttaktikit mil-bard* my teeth are chattering with the cold. - iva *mittaktik*.

ت ك ت ك [2]

تكتيك *taktiik* <Fr *tactique*> /n/ **1** tactics. **2** /pl *-aat*/ tactic, scheme, strategem.

تكتيكى *taktiiki* /adj */ tactical.

تكتك *taktik*[2] /vt/ to plan (s.th.) carefully. - vn *taktaka*; ava/pva *mitaktik*.

متكتك *mitaktik* /adj */ sharp, on-the-ball.

اتّكتك *ʔittaktik*[2] /vi/ to be planned carefully. - iva *mittaktik*.

ت ك ت ك [3]

تكاتيك *takatiik* /pl n/ consequences. *gat-lu ḥumma w-raaḥ fi-takatik-ha* he had fever and died of it.

ت ك س

تاكسى *taks* or *taksi* <perh Engl> /n pl *taksaat, taksiyyaat, tukúsa*/ taxi. *taksi bin-nafar* a taxi which plies a fixed route, each passenger paying his own fare.

ت ك ك [1]

تكّ *takk*[1] *(i)* /vi/ to make a slight sound, creak, click. *ʔil-balaaṭa takkit taḥtˀ riglay-ya* the tile made a slight sound under my feet. *ʔil-maktab takkˀ taḥt it-tuql* the desk creaked under the weight. - vn *takk, takakaan*; ava *taakik*.

تكّة *takka*[1] /inst n, pl *-aat*/ **1** a slight sound, a creak, a click. **2** a little bit. **3** twitch, tic. *takka ɛaṣabiyya* a nervous tic.

ت ك ك [2]

تكّة *tikka*[1] /n pl *-aat, tikak*/ draw-string. - also *dikka*.

تكّك *takkik* /vt/ to put a drawstring in (e.g., a garment). - vn *tatkiik*; ava/pva *mitakkik*.

اتّكّك *ʔittakkik* /vi/ to have a draw-string inserted (of, e.g., a garment). - iva *mittakkik*.

[3] (ت ك ك)

تكّ *takk*[2] <T *tek*> /n/ *[mus]* weak beat.

تكّة *takka*[2]*: takkit ħaraara* a plate of heat-resistant material (asbestos) used on a goldsmith's soldering disc.

تكّ *tikk*[1] /n/ *[mus]* used only in combination with the name of a note to indicate a rise in pitch of a quarter tone, e.g., *tikk*[i] *zirkoola* the note one quarter of a tone higher than D flat (i.e. D half flat).

تكّ *tikk*[2] <Engl> /n/ teak.

تكّة *tikka*[2] <It *tacca*> /n pl *-aat/ [print]* nick (on a piece of type).

[1] ت ك ل see ء ك ل : *ʔittaakil*

[2] ت ك ل see [1] و ك ل : *tukaal*

ت ك م

تكمة *tukma* /n/ binding strip round a section of appliqué work.

ت ك ن

تكنة *tikna* <T *tekne*> **1** plasterer's mixing trough. **2** hull (of a boat).

ت ك ن ل -

تكنولجيا *tiknulujya* <prob Engl> /n/ technology.

تكنولجى *tiknulooji* **1** /adj */ technological. **2** /n */ technologist.

ت ك ى

تكيّة *tikiyya* <cf T *tekye*> /n pl *-aat, takaaya*/ **1** *[obsol]* Sufi religious house. **2** *[joc]* free eating-place, a place where anything goes. ‖ *tikiyya min veer bawwaab [prov]* ≈ a free-for-all.

تكّاية *takkaaya* /n pl *-aat*/ arm-rest. *takkaayit kanaba* cushion used as an arm-rest on a sofa.

اتّكى *ʔittaka* /vi/ to lean, support oneself. *haat lina ʃilat nittiki ɛaleeha* bring cushions for us to recline on. *ʔil-ɛaguuz kaan maaʃi yittiki ɛala ɛukkaaz* the old man walked supporting himself on a walking-stick. *rizq is-saaɛi lil-mittiki [prov]* the labour of the hard-working enriches the idle. - ava *mittiki*.

اتّكى *ʔittakka (yittakka)* /vi/ **1** to press, exert pressure. *tittakka ɛal-xaʃab yizayyaq* if you press on the wood, it will creak. *ʔil-mudarris ɛallim-ni zzaay ʔattakka gaamid ɛad-dibriyaaj* the instructor taught me how to press down hard on the clutch. **2** to place emphasis, give concentration. *tinaqqi faṣleen tittakka ɛaleehum kuwayyis wi-txuff il-imtiħaan* choose a couple of chapters and study them thoroughly, then take the exam. - vn *tatkiyya*; ava *mittakki*.

ت ك ى ه

تاكيه *takeeh* <Fr *taquet*> /n pl *-aat/ [auto]* tappet.

ت ل ب

تلب *tilb* /adj */ *[obsol]* well-built, strong (of a person). *gittit-u tilba* he is solidly built.

ت ل ب ى -

تليبيانكو *tilibiyanku* <It *taglio bianco*> /n/ cut of meat consisting of a whole thigh muscle. - also *tiribiyanku*.

ت ل ت

تلث، تلت *tilt* /n pl *ʔatlaat*/ **1** one third, a third part. *tilt*[i] *kiilu* a third of a kilo. ‖ *ma-kanit-ʃ*[i] *tistagri tquul tilt it-talaata kaam* ≈ she didn't dare utter a word. - *ʔiddaa-ni ɛalqa tilten-ha moot* ≈ he gave me a beating which half killed me. **2** string of prayer beads of thirty-three beads only (in contrast with one of ninety-nine beads).

ثلاث، تلات *talat* /num: in constr w foll n pl; usu *talatt* when followed by n pl ordinarily w initial hamza/ three. *talat riggaala* three men. *talatt alaaf* three thousand. *kull*[i] *talat ħigaara* every three stones. *fit-talatt iyyaam dool* during those three days. ‖ *ʔit-talat waraqaat* the three-card trick. - *fuṛl it-talat waraqaat* trickery, dishonesty, monkey business.

ثلث *sulus* /n/ a large decorative intertwined style of Arabic calligraphy. ‖ *bis-sulus* definitely, as in *ʔinta ħa-trawwaħ bis-sulus* you will definitely go home.

تلات، تلاتاء *talaat* (also *yoom talaat*) /n/ (any) Tuesday. *ʔit-talaat* or *yoom it-talaat* Tuesday.

تلاتة، تلاتة *talaata* /num: in absol state, in apposition, or w foll n sing in contexts of ordering and itemizing; pl *-aat*/ three. *miyya w-talaata* one hundred and three. *ʔil-qanuun raqam talaata* law number three. *ʔil-ɛiyaal talaata* the children are three (in number). *ɛiyal-ha t-talaata* her three children. *talaata saaṛ* three piastres. *haat talaata qahwa* bring three coffees! *kull*[i] *sanateen talaata* every two or three years. ‖ *yoom talaata (min) ʃahr*[i] *talaata* the third of March. - *ʔiṭ-ṭalaaq bit-talaata [Isl]* irrevocable divorce. - *talaata bi-llaah il-ɛaẓiim* or *w-allaahi l-ɛaẓiim talaata* three (oaths) 'By Almighty God!' (a very forceful oath).

¶ *talataat (talataat)* /adv/ in threes, three at a time.

ثلاثى *sulaasi* /adj/ **1** triple. ‖ *ħuqna sulasiyya* D.P.T. (diphtheria, pertussis and tetanus) injection.

- *ʔil-ɛaḍala s-sulasiyya [anat]* the triceps. **2** tripartite. **3** *[mus]* three-quarter (time), waltz (tempo). — **4** /n/ trio.

ثالوث *saluus* /n/ triad, trio. *ʔis-saluus il-ʔaqdas [Chr]* the Holy Trinity.

تلّات *tallaat* /n * and pl *tallaata*/ **1** practitioner of the three-card trick. **2** con man.

تالت، تالث *taalit* /adj/ third. *ʔit-talta tabta [prov]* the third (time) is decisive.

ثالثا *saalisan* /adv/ thirdly.

متلوت *matluut*↓ = *musallas* 1.

تلتاسر، تلاتة عسر *talattaafar* **1** /num pl *-aat*/ thirteen. **2** *ʔit-talattaafar* /adj invar/ the thirteenth.

تلاتين، تلاثين *talatiin* **1** /num pl *-aat*/ thirty. ‖ *waaḥid wi-talatiin* a card game resembling blackjack. - *ɖarab* (or *ɛamal*) *waaḥid wi-talatiin [coarse]* to masturbate, wank. **2** *ʔit-talatiin* /adj invar/ the thirtieth.

تلاتمائة *tultumiyya* **1** /num pl *-aat*/ three hundred. **2** *ʔit-tultumiyya* /adj invar/ the three-hundredth.

تلّت، تلّث *tallit* /vt/ to do (s.th.) for a third time. *laazim ʔatallit is-sana* I have to repeat the year a third time. *ḥabl' mtallit* three-stranded rope. - vn *tatliit*; ava/pva *mitallit*.

تثليث *tasliis* /n/ *[Chr]* doctrine of the Trinity.

تتليت *tatlit* /n/ **1** practice of the three-card trick. **2** conning.

مثلّث *musallas* /adj/ **1** (also *mitallit*↓) triangular. *mabrad mitallit* three-sided file. — /n pl *-aat*/ **2a** triangle. *ḥisaab il-musallasaat* trigonometry. ‖ *liɛb' musallasaat [soccer]* three part pass. - *musallas il-massaaḥ* surveyor's cross-staff. **2b** *[mus]* triangle. **2c** third highest pitched string of the *ɛuud*.

اتّلّث *ʔittallit* /vi/ **1** to be difficult, or choosy, play hard-to-get. *ʔiz-zibuun bi-yittallit ɛaleena* the customer is being difficult and hard to please. **2** passive of *tallit*. *ʔil-ḥabl' da law ittallit ḥa-ykuun tixiin ɢawi* if three thicknesses of this rope are used together it will be too thick. - ava/iva *mittallit*.

اتّالت *ʔittaalit* ≐ *ʔittallit* 1. - ava *mittaalit*.

ت ل ت ل

تلتل *taltil* **1** /vt/ to heap up, pile up. **2** /vi/ to become a pile. *balaawi mtaltila* calamity upon calamity. - vn *taltala*; ava/pva *mitaltil*.

اتّلتل *ʔittaltil* /vi/ to be heaped up, be piled up. *ʔif-fuɤl ittaltil ɛala dmaaɤ-i* I was up to my ears in work. - iva *mittaltil*.

ت ل ت و –

تلتوار *tilitwaar* <Fr *trottoir*> /n pl *-aat*/ pavement, sidewalk. - also *tiritwaar, turutwaar, tallitwaar*.

ت ل ج

تلج، ثلج *talg* /n/ **1** ice. - /adjectivally/ *ʔil-mayya talg* the water is ice-cold. **2** snow.

تلاّجة، ثلاّجة *tallaaga* /n pl *-aat*/ refrigerator. *markib tallaaga* refrigerator ship. ‖ *gibna tallaaga* very creamy, freshly-made lightly-salted white cheese.

تلّج، ثلّج *tallig* /vt/ **1** to store (s.th.) on ice. **2** to freeze. — /vi/ **3** to freeze, turn to ice. *talligt' mil-bard* I froze with cold. - vn *tatliig*; ava/pva *mitallig*.

اتّلّج *ʔittallig* /vi/ to become frozen or very cold, be made to freeze. - ava/iva *mittallig*.

ت ل ح see also ت ن ح

تلح *tiliḥ, tilḥ* /adj */ insensitive, thick-skinned, impervious to hints.

أتلح *ʔatlaḥ* /el/ more/most insensitive, etc.

تلاحة *talaaḥa* /n/ insensitivity, thick-skinnedness, imperviousness to hints.

تلّح *tallaḥ* /vi/ **1** to become blank, dazed or insensitive. **2** to behave in an insensitive or brusque way. - vn *tatliiḥ*; ava *mitallaḥ*.

استتلح *ʔistatlaḥ* **1** /vt/ to consider insensitive or thick-skinned. **2** /vi/ to behave in an insensitive way. - vn *ʔistitlaaḥ*; ava/pva *mistatlaḥ*.

ت ل ح م

تلحم *talḥam* /vi/ to be obstinate, refuse to give way. *xadit if-fanṭa w-talḥamit ɛaleeha* she took the bag and refused to let go of it. *ma-ttalḥam-f' kida - ḥaawil tifham illi b-aɢul-huu-lak* don't be so stubborn - try to understand what I'm telling you! - vn *talḥama*; ava *mitalḥam*.

اتّلحم *ʔittalḥam* = *talḥam*.

ت ل س ك –

تلسكوب *tiliskoob* <perh Fr> /n pl *-aat*/ telescope.

ت ل غ ر –

تلغراف *tilixraaf* <perh Engl *telegraph*> /n pl *-aat*/ telegram, cable. - also *tillixraaf, tallixraaf*.

ت ل ف

تلف *tilif (a)* /vi/ **1** to become damaged or destroyed. *ʔaɛṣab-ha tilfit* her nerves were wrecked. ‖ *ʔis-salaf talaf* ≈ to lend is to lose. **2** to become corrupted or spoiled. *ʔil-wad da tilif min yoom ma raaḥ ig-gamɛa* this boy has been corrupted since he joined the university. - vn *talaf*; ava *talfaan, taalif*.

تلف *talaf (i)* /vt/ **1** to damage, wreck. *ʔil-ḥariiɢa talafit*

il-maħall the fire wrecked the shop. **2** to corrupt. *ṣaħb-u talaf ʕaxlaaq-u* his friend corrupted his morals. - vn *talaf, talafaan*; ava *taalif*; pva *matluuf*.

تلفيّات *talafiyyaat* /pl n/ breakages, damage.

متلاف *mitlaaf* /adj/ extravagant, wasteful, prodigal.

توالف *tawaalif* /pl n/ things too damaged to function properly.

انتلف *ʕintalaf* /vi/ **1** to be damaged, be wrecked. **2** to be corrupted, be spoiled. *ʕibn-ak ik-kibiir intalaf* your eldest son has gone to the dogs. - vn *ʕintilaaf*; iva *mintilif*.

أتلف *ʔatlaf* /vt/ to damage, harm. *ʔil-xamra mutlifa liṣ-ṣiħħa* alcohol is injurious to the health. - vn *ʔitlaaf*; ava *mutlif*.

ت ل ف ز -

تلفيزيون *tilifizyoon* <Fr> /n pl *-aat*/ television.

تلفيزيوني *tilifizyooni* /adj */ of or pertaining to television. *muṣawwir tilifizyooni* television cameraman. ‖*koora tilifizyoniyya* black and white football. - *maska tilifizyoniyya* (unnecessarily) melodramatic goal save.

تلفيزيونجي *tilifizyongi* /adj pl *-yya/ [deris]* pertaining to television.

ت ل ف س

تلفس *talfis* /vi/ to be flabby, drip with fat. - vn *talfasa*; ava *mitalfis*.

اتّلفس *ʔittalfis* /vi/ to become or be made fat or flabby. - ava/iva *mittalfis*.

ت ل ف ن

تليفون *tilifoon* <perh Fr> /n pl-*aat*/ **1** telephone. **2** telephone call. *ʔiddii-ni* (or *ʔiqrab-li) tilifoon* give me a call. *ga-ni tilifoon* I got a telephone call.

تليفوني *tilifooni* /adj/ telephonic. *taḥwiil tilifooni* (money) transfer by telephone.

تلفن *talfin* /vt and vi/ to telephone, make a telephone call. - vn *talfana*; ava *mitalfin*.

اتّلفن *ʔittalfin* /vi/ to be telephoned. - iva *mittalfin*.

ت ل ك

تلك *talk: budrit talk* talcum powder. *ḥagar talk* talc, hydrous magnesium silicate.

ت ل ل ١

تلّ *tall* /n pl *tiluul, tilaal*/ **1** mound, man-made hill, tell. *ʔil-balad di mabniyya ʕala tall[a] ʕaali* this village is built on a high mound. ‖*xud min it-tall[i] yixtall [prov]* ≈ spending will consume any amount of money. - *tall il-ʔamar* (mount of the moon) heel of the hand (in palmistry). - *tall[i] kawkab iz-zuhra* (mount of Venus) ball of the thumb (in palmistry). **2** /pl *tiluul* only/ heap of dirt.

ت ل ل ٢

تلّ *tull* <Fr *tulle*> /n/ tulle, gauze.

تلّي *tulli[1]* **1** /n/ tulle. **2** /adj invar/ made of tulle. *namusiyya tulli* tulle mosquito net.

تلّيّة *tulliyya* /n pl *talaali, tulliyyaat/ [rur]* head-shawl of tulle. *maʕaana t-tarabiiʕ wit-talaali* cry of the vendor of haberdashery or notions.

ت ل ل ت -

تلّتوار *tallitwaar* <Fr *trottoir*> /n pl *-aat*/ pavement, sidewalk. - also *tilitwaar, tiritwaar, turutwaar*.

ت ل ل غ -

تلّغراف *tilliɣraaf, tilliɣraaf, talliɣraaf* <perh Engl *telegraph*> /n pl *-aat, -aat*/ telegram, cable.

تلّغرافي *tilliɣraafi, tilliɣraafi, talliɣraafi* /adj */ telegraphic. *ʕinwaan tilliɣraafi* cable address.

تلّغرافجي *tilliɣrafgi, talliɣrafgi* /n pl *-yya*/ telegraphist.

ت ل ل ى

تولّلي *tulli[2]* <T *türlü*> /n/ dish of mixed vegetables. - also *turli, ṭurli*.

ت ل ل ي س

تلّيس *talliis* <Copt> /n pl *talaliis*/ large sack. ‖*ʔaaʕid zayy it-talliis* ≈ sitting like a lemon.

تلّيسة *talliisa* /n pl *talaliis, tallisaat/* = *talliis*.

ت ل م

تلم *tilim[1] (a)* /vi/ **1** to become blunt. *ʔis-sikkiina tilmit xaaliṣ* the knife has become very blunt. **2** to become insensitive or thick-skinned. - vn *talma, talaama, talamaan*; ava *taalim*.

تلم *talam (i)* /vt/ to blunt. *ʔiṣ-ṣada ḥa-yitlim is-sikkiina* rust will blunt the knife. - vn *talma, talamaan*; ava *taalim*; pva *matluum*.

تلامة *talaama* /n/ **1** bluntness. **2** thick-skinnedness, insensitivity.

متلومة *matluuma* /fem adj/ loose, profligate, abandoned (of a woman).

تلمان *talmaan* /adj/ blunt.

أتلم *ʔatlam* /el/ **1** more/most blunt. **2** more/most insensitive or thick-skinned.

تلم *tilim[2]* /adj */ **1** blunt (of a blade). **2** thick-skinned, insensitive. *tilim zayy il-mizayyiniin* as bold as a barber.

تلّم *tallim* **1** /vt/ to cause to become blunt. – /vi/ **2** to

become blunt. **3** to be unresponsive. *ʕig-gaḥʃ' tallim fil-ʕarḍ' xalaaṣ* the donkey foal absolutely refused to budge. - vn *tatliim*; ava/pva *mitallim*.
اتّلم *ʕittallim* /vi/ to become or be made blunt. - ava/iva *mittallim*.
اتّالم *ʕittaalim* /vi/ to become insensitive or thick-skinned. - ava *mittaalim*.
استتلم *ʕistatlim* /vt/ **1** to consider blunt. **2** to consider insensitive or thick-skinned. — /vi/ **3** to become blunt. **4** to become insensitive or thick-skinned. - vn *ʕistitlaam*; ava *mistatlim*.

ت ل م ز
تلميذ *tilmiiz* /n pl *talamiiz, talamza*/ **1** pupil, school-child, student. *tilmiiz ḫirafiˀ* apprentice. **2** *[Chr]* disciple.
تلمذة *talmaza* /n/ apprenticeship.
اتّلمذ *ʕittalmiz* /vi/ to become or be made a student or disciple of (s.o. or s.th.). - vn *talmaza*; iva *mittalmiz*.

ت ل ى [1]
تلا *tala[1] (i, uˀ)* /vt/ to recite. *bi-yitlu l-qurʕaan ṭuul il-leel fi-ramaḍaan* they recite the Koran all night long during Ramadan. - vn *tilaawa*; ava *taali*; pva *matli*.

ت ل ى [2] see also و ل ى
تلا *tala[2] (i)* /vt/ to follow. - vn *tuluww*; ava *taali*.
تالى *taali* /adj/ following. *bit-taali* consequently, as a consequence.

ت ل ى ا ن see ط ل ى ا ن : *talyaani*

ت ل ى و
تليو *tilyu* <It *tiglio*> /n/ dried lime blossoms (used in the preparation of an infusion).

ت م ب ا ك
تمباك *tumbaak, timbaak* <perh Gk *toúmpeki*> /n/ type of finely cut tobacco, wrapped in a broad leaf, for smoking in a *ʃiiʃa*. - also *ṭumbaak*.

ت م ب ا ل
تمبالة *timbaala* <It *timballo*> /n/ kettledrum.

ت م ب ا -
تمباني *timbaani* <perh It> /n/ timpani, orchestral kettledrums.

ت م ب ك [1] see ت م ب ا ك : *tumbaak, timbaak*

ت م ب ك [2] see ت ن ب ك [1] : *ʕittambak*

ت م ب ل see ت ن ب ل : *tambal, tambil, ʕittambil*

ت م ب و
تمبو *timbuˀ* <perh It> /n/ tempo.

ت م ب و ل
تومبولة *tumboola* <It> /n/ tombola.

ت م ب ى ل [1]
تمبيلة *tambiila* /n pl *-aat*/ *[carp]* strip of wood fixed to bottom rail of windows and doors to lengthen them when they are too short.

ت م ب ى ل [2] see ت م ب - ء : *tumbiil*

ت م ت م
تمتم *tamtim* /vi/ to mumble. - vn *tamtama*; ava *mitamtim*.

ت م ر [1]
تمر *tamr* /coll n/ dried dates. ‖*tamr' hindi* tamarind. - *tamr' ḫinna* henna plant, Egyptian privet. - *tamr' ḫinna ʕafrangi* mignonette.
تمرة *tamra* /n pl *-aat*/ **1** /unit n/ a dried date. ‖*ma-yiɛraf-ʃ it-tamra min ig-gamra [prov]* (he can't tell a dried date from an ember) ≈ he doesn't know his arm from his elbow. **2** glans (of the penis).

ت م ر [2]
تمرجي *tamargi* <T *tımarcı*> /n pl *-yya*/ (male) nursing assistant.
تمرجيّة *tamargiyya* /n pl *-aat*/ female nursing assistant.
تمّر *tammar[1]* <T *tımar* from P> /vt/ to take care of, attend to (animals, especially horses). - vn *tatmiir*; ava/pva *mitammar*.

ت م ر [3] see س م ر [4] : *tamar, tammar[2]*

ت م س ا ح
تمساح *timsaaḥ* <Copt> /n pl *tamasiiḥ*/ crocodile. *dimuuɛ it-tamasiiḥ* crocodile tears. ‖*kureek timsaaḥ* large hand-operated type of car jack. - *sarraaq timsaaḥ [carp]* handsaw.

ت م ل ل ي
تملّى *tamalli* <T *temelli*> /adv/ continually, always. *tamalli yikdib* he always lies. *saɛit-ha tamalli b-tuqaf* her watch keeps on stopping.

ت م م

تمّ *tamm*[1] *(i)* **1** /vt/ to accomplish, render complete. *ʕif-ʃahr illi gayy*[i] *ħa-ytimm*[i] *xamas siniin* he'll be five years old next month. *ʕit-toob tamm*[i] *talatiin mitr* the bolt of cloth was a full thirty metres in length. **2** /vi/ **2a** to become complete, be completed, be accomplished. *sinan-ha tammit* she got her full set of (adult) teeth. *tamm il-ittifaaq benhum* the agreement between them was concluded. **2b** to be effected, take place, occur. *ʒamaliyyiteen yitimmu f-nafs il-waqt* two operations that take place simultaneously. *ʕil-imtiħaan ma-bi-ytimm*[i]*-ʃ ʒaʃwaaʕi* the exam is not conducted in a haphazard fashion. - vn *tamaam, tamamaan*; ava *tamm, taamim*; pva *matmuum*.

تمام *tamaam* **1** /n/ completeness. *ʕaaxir tamaam* or *tamaam it-tamaam* absolutely perfect. ‖*ʒala t-tamaam* or *bit-tamaam* entirely, completely, wholly. - *ʕidda tamaam [mil]* to report all present and correct. - *ʈabuur it-tamaam [mil]* roll call. **2** /adj invar/ perfect. *raagil tamaam* a real man. *kull-u tamaam* everything is O.K. *xabaṭ xabṭa tamaam qawi* he pulled off a really O.K. deal. **3** /adv/ completely, perfectly. *ʕuxt-i ʃabah-i tamaam* my sister looks exactly like me. *ʕig-gihaaz maaʃi tamaam* the equipment is working perfectly.

¶ *tamaaman* /adv/ absolutely, completely.

تامّ *tamm*[2], *taammʕ* /adj/ **1** complete. *ʒandu ʕilmaam taamm*[i] *bil-ʒamal* he has a complete grasp of the work. **2** perfect. *fi-waqʒ*[i] *ʕufuqi taamm* in a perfect(ly) horizontal position.

تمّة *tamma, timma* /n/ completeness, fullness. *ʕaadi timmit il-qiṣṣa* this is the end of the story. ‖*ʒala tammit* (also *ʈammit*) *ʒeen-(u)* full to the brim. - *ʕis-sabʒa w-timmit-ha* (or *w-dimmit-ha*) every conceivable evil.

أتمّ *ʕatamm*[1] /el/ more/most complete or perfect. *huwwa xallaṣ if-ʃuɤl*[a] *ʒala ʕatamm*[i] *wagh* he did the work in the most complete and satisfactory way. *ʒala ʕatamm istiʕdaad* in full readiness.

تميمة *tamiimaʕ* /n pl *tamaayim*/ amulet, charm.

متمّة *mitamma:* *ʕaxrit il-mitamma* ≈ to add insult to injury, the last straw.

تمّم *tammim* /vt/ to complete, put an end to, conclude. *ʕif-ʃawiif tammim il-maħḍar wi-qafal-u* the sergeant concluded the police report and closed it. ‖*rabb-i-na ytammim bi-xeer* may Our Lord grant a successful conclusion! (a compliment paid, e.g., to the couple and their parents at an engagement party). - vn *tatmiim*; ava/pva *mitammim*.

¶ *tammim ʒala* to check, to inspect (s.th.). *ʕibqa tammim ʒala f-ʃuɤl*[i] *qabl*[i] *ma trawwaħ* please inspect the work before you go home.

تتمّة *tatimmaʕ* /n/ conclusion. *ʕeeh tatimmit l-qiṣṣa* what is the end of the story?

أتمّم *ʕittammim* /vi/ passive of *tammim*. - iva *mittammim*.

أتمّ *ʕatamm*[2]ʕ = *tamm*[1] 1. - vn *ʕitmaam*; ava *mutimm*.

استتمم *ʕistatmim* /vt/ to complete, conclude. - vn *ʕistitmaam*; ava/pva *mistatmim*.

استتمّ *ʕistatamm* **1** /vt/ to finalize. *ʕistatamm*[i] *ʕumuur safar-u* he finalized his travel arrangements. **2** /vi/ to be or become completed. - vn *ʕistitmaam*; ava/pva *mistatimm*.

ت م ن [1]

ثمن، تمن *taman*[1] /n pl *ʕatmaan*/ price. *ʕin-naṣr*[i] *fil-ħarb*[i] *taman-u t-taḍħiyya* the price of victory in war is sacrifice. ‖*kull*[i] *ʃeeʕ bi-taman-u* everything has its price. - *ʕil-ɤaali taman-u fii* expensive things are worth every penny in quality.

ثمين *samiin* /adj/ valuable, precious.

ثمّن، تمّن *tammin*[1] /vt/ to put a price on, appraise the value of. - vn *tatmiin*; ava/pva *mitammin*.

مثمّن، متمّن *mutammin* /n */ professional appraiser, valuer.

أتمّن *ʕittammin* /vi/ to be priced. - iva *mittammin*.

ت م ن [2]

ثمان، تمان *taman*[2] /num: in constr w foll n pl; usu *tamant* when followed by n pl ordinarily w initial hamza/ eight. *taman kutub* eight books. *tamant iyyaam* eight days. *tamant alaaf* eight thousand.

ثمانية، تمانية *tamanya* /num: in absol state, in apposition, or w foll n sing in contexts of ordering and itemizing; pl *-aat*/ eight. *miyya w-tamanya* one hundred and eight. *ʂafħit tamanya* page eight. *ʕil-laʕʕiiba tamanya* the players are eight (in number). *tamanya saaɤ* eight piastres. *haat tamanya biira* bring eight beers! ‖*yoom tamanya (min) ʃahr*[i] *tamanya* the eighth of August. - *tamanyaat* the top inner corners of the goal (in soccer).

¶ *tamanyaat (tamanyaat)* /adv/ in eights, eight at a time.

ثمن، تمن *tumn* /n pl *ʕitmaan*/ **1** one eighth, eighth part. **2** *[obsol]* **2a** district or precinct of a city. **2b** police station of a district or precinct.

ثمنة، تمنة *tumna* /n pl *tuman*/ **1** *[obsol]* unit of weight equal to 2.5 *wiqqa* or 3.12 kilogrammes. **2** unit of dry measure equal to 0.258 litres.

ثامن، تامن *taamin* /adj/ eighth.

تمانتاشر، ثمانية عشر *tamantaafar* **1** /num pl *-aat*/ eighteen. **2** *ʕit-tamantaafar* /adj invar/ the eighteenth.

ثمانين، تمانين *tamaniin* **1** /num pl *-aat*/ eighty. **2** *ʕit-tamaniin* /adj invar/ the eightieth.

تمنيّة، ثمانمائة *tumnumiyya* **1** /num pl *-aat*/ eight hundred. **2** *ʕit-tumnumiyya* /adj invar/ the eight-hundredth.

تمّن، ثمّن *tammin*[2] /vt/ to make eight-sided or octagonal. - vn *tatmiin*; ava/pva *mitammin*.

متمّن، مثمّن *mitammin* **1** /adj/ octagonal, eight-sided. **2** /n pl *-aat*/ octagon.

ت م ن ى

تمونيه *timunya* <It *antimonio*> /n/ antimony.

ت م و ر

تيمور *timuur*↓ <prop name *Taymur*>: *manga timuur* large, dark-green variety of mango. - also *taymuur*.

ت ن ا

تنا *tana*[1] /n/ honour. *ma-luu-ʃ ʁarq' wala tana* he has neither honour nor dignity.

ت ن ب ك [1]

تنبك *tanbik* /vi/ to sit royally. - vn *tanbaka*; ava/pva *mitanbik*.

اتّنبك *ʔittanbik, ʔitṭambak* /vi/ to sit at one's ease, loll. *ʔittanbik fik-kursi ʁaamil nafs-u ʕabu ʁali* he lolled about in the chair putting on airs. - ava *mittanbik*.

ت ن ب ك [2] see ت م ب ا ك : *tumbaak, timbaak*

ت ن ب ل

تنبل *tambal* <P *tanbal*> /adj pl *tanabla*/ extremely lazy. ‖*tanablit is-sulṭaan* three fairy-tale characters of legendary indolence employed to amuse the sultan. *ʁamliin ʒayy' tanablit is-sulṭaan* behaving in an extremely indolent fashion.

تنبل *tambil* /vi/ to be or become sluggardly, be idle. - vn *tambala*; ava *mitambil*.

اتّنبل *ʔittambil* /vi/ to become sluggardly, idle or indolent. - ava *mittambil*.

ت ن ت

تانت *tant* <Fr *tante*> /n/ **1** aunt, auntie. **2** respectful form of address and reference to an older woman. - also *ṭanṭ*.

ت ن ت ر -

تنترليه *tanturleeh* <Fr *teinturerie*> /n/ dry-cleaning establishment.

ت ن ت ف

تنتف *tantif* /vt/ to cut or tear into small pieces, dismember. - vn *tantafa*; ava/pva *mitantif*.

تنتوفة *tantuufa* /n pl *tanatiif*/ morsel, small piece. ‖*ma-ħelt-uu-ʃ wala tantuufa* ≈ he hasn't a penny to his name.

اتّنتف *ʔittantif* /vi/ to be cut into small pieces, be dismembered. - iva *mittantif*.

ت ن ت ل

تنتلة *tantilla* <Fr *dentelle*> /n/ lace. - also *dantilla*.

ت ن ت ن [1]

تنتن *tantin* /vi/ to strum, hum. *b-atantin ʁal-ʁuud* I strum on the lute - also *dandin*. - vn *tantana*; ava *mitantin*.

ت ن ت ن [2] see د ن ت ل ل : *tantan, tantana*

ت ن ج ر

تنجرة *tangara* <T *tencere*> /n pl *tanaagir*/ *[obsol]* casserole dish. - also *ṭangara*.

ت ن ح see also ت ل ح

تنح *tiniħ, tinħ* /adj */ insensitive, thick-skinned, impervious to hints.

تناحة *tanaaħa* /n/ insensitivity, thick-skinnedness, imperviousness to hints.

أتنح *ʔatnaħ* /el/ more/most insensitive, thick-skinned, impervious etc.

تنّح *tannaħ* /vi/ to become mulish, become stubborn and dense. *ʔil-bihiim il-mitannaħ ma-ygii-ʃ ʔilla biq-ḳarb* the mulish beast will co-operate only when beaten. *muxx-i tannaħ* my mind seized up. *muxx-u mtannaħ* he's dense. - vn *tatniiħ*; ava *mitannaħ*.

اتّنح *ʔittanaħ* /vi/ to become mulish, stubborn, dense, and thick-skinned. - ava *mittanaħ*.

استتنح *ʔistatnaħ* **1** /vt/ to consider insensitive or thick-skinned. **2** /vi/ to become insensitive or thick-skinned. - vn *ʔistitnaaħ*; ava *mistatnaħ*.

ت ن د

تندة *tanda* <It *tenda*> /n pl *tinad, tandaat*/ awning.

ت ن د ر

تندر *tandar* /n/ *[anat]* flexor tendon.

ت ن ر

تنر *tinar* <Engl *thinner*> /n/ **1** paint thinner. **2** spot remover.

ت ن س [1]

تنس *tinis* <Engl> /n/ tennis. *tinis iṭ-ṭawla* table tennis.

ت ن س [2] see ت و ن س: *tuunis*[1], *tuunus*, *tunsi*, *tuunis*[2]

ت ن ك [1]
تنك *tank* <Engl> /n pl *-aat*, *tanaaki*↓/ storage tank. *tank*[i] *banziin* petrol tank. *tank*[i] *ṣabuura* ballast tank, buoy.
تنّك *tannik* **1** /vt/ to bloat (of food). **2** /vi/ to become bloated with food. - vn *tatniik*; ava/pva *mitannik*.
اتّنك *ʕittannik* /vi/ to become full, become bloated with food. *kal wi-ttannik* he ate till he was fit to burst. - ava *mittannik*.

ت ن ك [2]
تنكة *tanaka* <T *teneke*> /n pl *-aat*/ metal pot used for brewing Turkish coffee. - also *kanaka*.

ت ن ك ا ر
تنكار *tinkaar* /n/ tincal, borax.

ت ن ن [1]
تنّ *tann* (also *tannit*) <perh Copt> /w suff; perf: *tann-u/tannit-u, tann-a-ha/tannit-ha, tann-u-hum/tannit-hum, tann-ak/tannit-ak, tann-ik/tannit-ik, tann-u-ku(m)/tannit-ku(m), tann-i/tannit-ni, tann-i-na/tannit-na*; imperf: *yitann-u/yitannit-u, titann-a-ha/titannit-ha, yitann-u-hum/yitannit-hum, yitann-ak/yitannit-ak, titann-ik/titannit-ik, titann-u-ku(m)/titannit-ku(m), ʔatann-i/ʔatannit-ni, nitanni-na/nitannit-na*/ quasi-verb indicating **1** the continuousness or habitualness of an action or state. *tann-i daaxil* further and further in I went. *titann-u-ku maʃyiin* keep on going. *tann il-waad yinaadi ɛaleeha l-ɤaayit ma tnabaḥ* the boy kept on calling out to her until he was hoarse. *laazim yitann-u maaʃi* he must keep on going. *yitann-u-hum maʃyiin* they keep on going. *ʔis-sitt*[i] *tannit-ha mittaxda* the woman remained upset. *ya reet titann-ik wayyaaya* I wish you could stay with me. **2** the immediate succession of one action or state to another. *ɋaddimt it-tazkara w-tann-i ṭaaliɛ ɛala fooɋ* I presented the ticket and then went straight upstairs. *ʃaafu g-gurnaal wi-tann-u-hum ṭayriin ɛaʃ-ʃirka* they saw the newspaper and rushed straight off to the company.

ت ن ن [2]
تنّ *tinna: ma-luu-ʃ (ma-lha-ʃ) tinna* he (she) has no principles.
تنّين *tinniin* /n pl *-aat*, *tananiin*/ dragon. *maari girgis wit-tinniin* St. George and the dragon.

ت ن ن ي ه
تنيه *tinneeh* /n pl *-aat*/ *[Chr]* alb.

ت ن و
تنوة *tanwa* /n/ dregs (of Turkish coffee).

ت ن ى [1]
تنى، ثنى *tana*[2] *(i)* /vt/ **1** to bend. *ʔitnu riglee-ku w-rukab-ku* bend your legs and knees. *tana raas-u l-taḥt* he bent his head down, he hung down his head. **2** to fold. *taneet ḥarf-u* I folded its edge. *deel matni ɛala makana* a hem turned up by machine. **3** *[naut]* to reef. - vn *tany, taniyya*; ava *taani*; pva *matni*.
تنية، ثنية *tanya* /n pl *-aat*/ **1** instance noun of *tany*. **2** fold, bend. *tanyit id-diraaɛ* the crook of the arm. **3** hem. *tanyit banṭaloon* trouser turn-up, trouser cuff. **4** *[naut]* reef (in a sail).
تنيّة *taniyya* /n pl *-aat*/ fold, bend.
أثناء *ʔasnaaʕ* /prep/ during. ‖*fil-ʔasnaaʕ di* during this time.
اتّنى *ʔittana* /vi/ passive of *tana*. *laazim yittini ʔin-nuṣṣ* it must be folded in half. - iva *mittini*.
انتنى، انثنى *ʔintana* = *ʔittana*. - iva *mintini*.
تنّى، ثنّى *tanna*[1] /vt/ to bend or fold (a number of things, or one thing a number of times). - vn *tatniyya*; ava/pva *mitanni*.
اتنّى، اتثنّى *ʔittanna* /vi/ **1** to be bent or folded (of a number of things or of one thing a number of times). **2** to sway (of a woman in walking). - ava/iva *mittanni*.
أثنى *ʔasna* /vi/ to speak in praise, express admiration. *kull iṭ-ṭalaba b-yisnu ɛalee* all the students praise him. - vn *sanaaʕ*; ava *musni*.
استثنى *ʔistasna* /vt/ to make an exception of. *bi-ndaffaɛ kull iṭ-ṭalaba maṣariif laakin bi-nistasni ʔawlaad il-ʔasaṭza* we charge all the students expenses, but we except the children of professors. - vn *ʔistisna, ʔistisnaaʕ*↑; ava *mistasni*; pva *mustasna*.
استثناء *ʔistisnaaʕ*↑ /n pl *-aat*/ exception. *bi-stisnaaʕ* ... with the exception of ....
استثنائى *ʔistisnaaʕi*↑ /adj/ exceptional. *ḥaala stisnaʕiyya* an exceptional situation.

ت ن ى [2]
اتنين، اثنين *ʔitneen* **1** /num, pl *-aat*/ two. *waaḥid ṣuɤayyar wi-tneen kubaar* one small and two large. *humma l-itneen* both of them. *ʃahr itneen* February. - /adverbially/ *ʔilli-nta ɛayz-u taxd-u tneen* whatever you want you can take twice over. **2** (also *yoom itneen*) /n/ (any) Monday. *yoom l-itneen* Monday.

¶ *ʃitnenaat* /adv/ in twos, by twos.
اتناشر، اثنا عشر *ʃitnaaʃar* **1** /num pl *-aat*/ twelve. **2** *ʃil-ʃitnaaʃar* /adj invar/ the twelfth.
ثانى، تانى *taani* /adj */ **1** second. *ʃil-ħarb il-ɛaalamiyya t-tanya* the Second World War. **2** other, another. *baɛd' ɛiʃriin yoom tanyiin* after another twenty days. *ma-tgii-ʃ la bukra wala ʃayy' yoom taani* don't come tomorrow or any other day! *ʃit-tanyiin feen* where are the others? *ɛandak taani* have you any other? *miʃ ɛaawiz min da - ɛaawiz min it-taani* I don't want (any) of that, I want (some) of the other. **3** next, following. *rigiɛna taani yoom* we returned the following day. *taani marra ma-titʃaxxar-ʃ* next time don't be late. ‖*kull' yoom wit-taani* (too) often. *-hiyya t-tanya gat* she, in her turn, came. — /adv/ **4** again, more. *miʃ ħ-akallim-ak taani* I'm not going to speak to you again. *kul taani* eat some more! *fii ʃeeh taani* what else is there?
¶ *min taani* /adv/ over again.
التوانى *ʃit-tawaani* /pl n in constr/ of the second grade (of quality). *quṭn it-tawaani* second-grade cotton.
ثانيا *saaniyan* /adv/ secondly.
ثانية *sanya* /n pl *sawaani, sanyaat*/ second (time unit). ‖*sanya waħda* just a moment!
ثانوى *sanawi*[1] /adj */ **1** secondary. *madrasa sanawiyya* school for children in the 15-18 age group, high school. *ʃahaada sanawiyya (ɛamma)* high school certificate. **2** pertaining to high school. *hiyya fiṣ-ṣaff il-ʃawwil is-sanawi* (or *fi-ʃuula sanawi*) she's in the first year of high school.
الثانويّة *ʃis-sanawiyya* /n/ **1** the last year of secondary school. **2** (also *ʃis-sanawiyya l-ɛamma*) the secondary school certificate.
ثنائى *sunaaʃi* /adj/ **1** dual. **2** bipartite. **3** *[mus]* two-four (time). — /n/ **4** *[mus]* duo, duet.
تنيّة *tiniyya: ʃabu miyya yiħsid ʃabu tniyya [prov]* (the man with a hundred (animals) envies the man with a (single) two-year-old animal) the rich are never satisfied.
ثنّى، تنّى *tanna*[2] /vt/ to do (s.th.) a second time. *tanni* do (it) again! -vn *tatniyya*; ava *mitanni*.

ت ن ى [3]
تنية *tinya* <prob Engl> *[path]* tinea, ringworm.

ت ن ى ا
تونيا *tunya* /n pl *-aat*/ *[Chr]* alb, tunic.

ت ن ى ك
تونيك *tuniik* <Fr> /n/ tunic.

ت ه
ته *tih* /fem n, pl *-aat*/ third letter of the Arabic alphabet. -also *taa, taaʃ, teeh*.

ت ه ت ه
تهته *tahtih* /vi/ to stutter, stammer. -vn *tahtaha*; ava *mitahtih*.

ت ه م
تهم *taham (i)* /vt/ to accuse (usually without evidence). *tahamuu f-sirqit il-ħumaar* they accused him of stealing the donkey. *huwwa kaan mathuum fil-bint* he was accused concerning the girl (i.e. of having seduced her). -vn *tuhma*; ava *taahim*; pva *mathuum*.
تهمة *tuhma* /n pl *tuham*/ accusation. *ʃit-tuhma di lizqit fii* this accusation stuck to him. *ʃit-tuhma btaɛt-i qatl* the charge against me is murder. ‖*wiff' it-tuham* criminal type.
انتهم *ʃintaham* /vi/ to be accused. -iva *mintihim*.
اتّهم *ʃittaham* /vt/ to accuse. *ʃittahamuu-ni bi-xtilaas ʃalf' gneeh* they accused me of embezzling a thousand pounds. -vn *ʃittihaam*; ava *mittihim*; pva *muttaham*↑.
متّهم *muttaham* /n */ *[leg]* accused.

ت و ء م
توأم *tawʃam* /n/ **1** /pl *tawaaʃim*/ sibling in a multiple birth. *tawʃameen* twins. -also *toom*. **2** *ʃit-tawʃam* /no pl/ *[astrol]* Gemini.

ت و ب [1]
تاب *taab (u)* /vi/ to repent and desist (from a vice). *tubt' li-llaah ɛan ʃamm ik-kukayiin* I swore to God to give up sniffing cocaine. *huwwa-nta ma-bi-ttub-ʃ' ʃabadan* you never give up your evil ways. -vn *tooba*; ava *taayib*.
¶ *taab ɛala* to unburden, relieve (of God). *rabb-i-na ytuub ɛaleehum mil-ɛiyaal* may God relieve them of the burden of their children! *ʃallaah yituub ɛaleena min ruʃyit is-safliin* God relieve us of the sight of (such) awful people! *rabb-i-na ytuub ɛaleena miʃ-fuxlaana l-mihabbiba di* God relieve us of this lousy work!
توبة *tooba* **1** /n/ repentance. **2** /adv/ never again. *tooba (min* or *ʃiza* or *ʃin* etc.). I'll never do (such and such) again, as in *tooba min di n-nooba* I'll never do it again, *tooba ʃin kunt astaɛqad fid-daggaliin* never again will I put my trust in con men, *tooba ʃin kunt' raaħ ʃaskar taani* never again will I get drunk.
توّاب *tawwaab* /n/ Granter of forgiveness (epithet of God).
توّب *tawwib* /vt/ to induce renunciation in (s.o.). *ʃana*

ḫ-aɛraf ʕatawwib-ak ɛan ik-kasal da I'll be able to make you give up this laziness! - vn *tatwiib*; ava/pva *mitawwib*.
اتّوّب *ʕittawwib* /vi/ passive of *tawwib*. - iva *mittawwib*.

ت و ب [2]
اتّاوب، تتاءب *ʕittaawib* /vi/ to yawn. *bi-tittaawib kitiir leeh* why are you yawning so much? - vn *mitawba*; ava *mittaawib*.

ت و ب [3]
توب، ثوب *toob* /n pl *ʕatwaab*/ **1** bolt (of cloth). **2** dress (particularly a long type). *toob il-faraḫ* wedding-dress. ‖*min toob-u* of his kind, as in *ʕiḫna miʃ min tob-ha* we're not her type. - *laabis toob ɣeer toob-u* he is trying to pass himself off as something he is not.

ت و ت [1]
توت *tuut*[1] /coll n/ **1** mulberry, mulberries. **2** mulberry tree(s).
توتة *tuuta*[1] /unit n, pl *-aat*/ **1** a mulberry. **2** a mulberry tree.
توتاية *tutaaya* = *tuuta*[1].
توّت *tawwit* **1** /vi/ to turn black and blue (as though hurt or bruised). *fafayf-i tawwitit mil-bard* my lips turned blue with cold. **2** /vt/ to make black and blue. *ḫ-atawwit-lu ɛeen-u* I'll give him a black eye. - vn *tatwiit*; ava/pva *mitawwit*.
اتّوّت *ʕittawwit* /vi/ to become or be made black and blue (as though bruised). - ava/iva *mittawwit*.

ت و ت [2]
توت *tuut*[2] <Copt> /n/ the first month of the Coptic year (mid-September to mid-October).
توتيّة *tutiyya*: *ʕis-sana t-tutiyya* the starting date of the Coptic calendar, i.e. 283 A.D.

[3] (ت و ت)
توت *tuut*[3] <Copt>: *tuut ḫaawi (tuut)* call of an itinerant conjurer.
توتة *tuuta*[2]: *wi-tuuta tuuta firʕit il-ḫadduuta* terminating phrase for a children's story ≈ and so the story is done.

ت و ج
تاج *taag* /n pl *tigaan*/ **1** crown (of a king, priest etc.). ‖*siid(-u) w-taag raas(-u)* ≈ (his) lord and master, one greatly superior to (him), as in *ʕinta siid-i w-taag raas-i* I honour you greatly, *da-na siid-ak wi-taag raas-ak* you're not worthy to touch the hem of my dress! **2** capital (of a column).
توّج *tawwag* /vt/ to crown. - vn *tatwiig*; ava *mitawwig*; pva *mutawwag*↑.
اتّوّج *ʕittawwig* /vi/ to be crowned. - iva *mittawwig*.

ت و ر
تور، ثور *toor* /n/ **1** /pl *tiraan*/ bull, ox. *guḫa ʕawla b-laḫm*[i] *toor-u [prov]* (Goha is more entitled to the flesh of his ox) ≈ a man has first claim on his own property. *toor allaah fi-barsiim-u [prov]* (God's ox in His clover) one who is stupid but content. *laa-lu fit-toor wala fiṭ-ṭiḫiin [prov]* (he has nothing to do with either the ox or the milling) he has no hand in the matter. *ʕaqul-lak toor tiqul-li ʕiḫlib-u [prov]* (I tell you 'Ox' so you tell me 'Milk it') (1) you are not paying attention, you are being dumb. (2) you insist on attempting the impossible. *ɛumr il-mara ma trabbi toor wi-yduur fis-saqya [prov]* (a woman can never raise an ox that would turn the water-wheel) ≈ a woman cannot properly raise a boy by herself. **2** *ʕit-toor* /no pl/ *[astrol]* Taurus. **3** /fem *toora*/ oaf, dolt.
ثيران *siiraan* /pl n/: *muṣarɛit is-siiraan* bull-fighting.

ت و ر ا ه
التوراه *ʕit-tawraah* /n/ the Torah.

ت و ز
توزة *tooza* /n pl *-aat*/ long double-ended drum (used at *zaar* ceremonies).

ت و ك
توكة *tooka* <T *toka*> /n pl *-aat, tiwak*/ **1** buckle. **2** decorative hairpin or slide.

ت و ل
توّل *tawal (i)* /vt/ to daze, incapacitate mentally, bewilder. - vn *tawal, tawalaan*; ava *taawil*; pva *matwuul*.
اتّوّل *ʕittawal* /vi/ to become or be made dazed, mentally incapacitated or bewildered. - ava/iva *mittiwil*.
انتوّل *ʕintawal* = *ʕittawal*. - ava/iva *mintiwil*.

ت و ل ت
تواليت *tuwalitt, tiwalitt, tawalitt*↓ <Fr *toilette*> /n/ **1a** grooming, smart appearance. *ṣabuun tuwalitt* toilet soap. **1b** (women's) evening-dress. *labsa tuwalitt* wearing evening-dress. **1c** cosmetics, make-up. *ʕis-sitt*[a] *ḫaṭṭit tuwalitt* the woman put on make-up. **2** /pl *-aat*/ bathroom, lavatory. *ɛamal tuwalitt* to go to the lava-

tory. — /adj invar/ **3** dressy (of women's clothes, etc.). *ʕif-ʃanṭa di sboor mif tuwalitt* that's a casual bag, not for dressy occasions.
تولت *tawlit* /vt/ to groom, make up (o.s.). - vn *tawlata*; ava/pva *mitawlit*.
اتّولت *ʕittawlit* /vi/ to become or make oneself groomed or made-up. - ava/iva *mittawlit*.

ت و م [1]
توم، ثوم *toom* [1] /n/ garlic.
تومیّة، ثومیّة *tomiyya* /n/ dish of meat in gravy flavoured with garlic.

ت و م [2]
توم *toom* [2] /n pl *tiwaam*/ twin(s). - also *tawʃam*.

(ت و ن)
تون *toon* <prob Engl> /n pl *-aat/ [mus]* interval of a tone. *rubɛ' toon* quarter tone. *nuṣṣ' toon* semitone.
تونة *tuuna* <prob Engl> /n/ tuna fish, tunny.

ت و ن ت –
تونتوت *tiwintoot* <Engl *twin tote*> /n pl *tiwintaat*/ double bet.

ت و ن س [1]
تونس *tuunis* [1], *tuunus* /prop n/ **1** Tunis. **2** Tunisia.
تونسی *tunsi* /pl *tawansa*/ **1** /adj/ Tunisian. **2** /n/ a Tunisian.

ت و ن س [2]
تونس *tuunis* [2] (also *ţuunis*) /n pl *tawaniis*/ rope which fastens the water pots to the *saqya* (see Pl.E, 12).

ت و ه
تاه *taah (u)* /vi/ **1** to go astray, get lost. *taayih ɛan il-beet* unable to find the house. *di taahit ɛan baal-i* that slipped my mind. *taayih fin-noom* drowsy. ‖*tuht' ɛan il-waɛy* I lost consciousness. **2** to be forgetful, have one's mind wander. *huwwa-na tayha ɛan is-sitt' di* could I possibly forget this lady? - vn *tawahaan*; ava *taayih*.
تایه *taayih* /ava/ ‖*sarrax* (or *ṣawwat) lamma gaab* (or *lamm[a] ɛalee) it-tayhiin* he screamed till he brought (even) the lost, he bellowed his lungs out. - *gaab it-tayha* he did the impossible, he did miracles. - *gaab laha t-tayha* he brought her to unimagined heights of (sexual) ecstasy.
توّه *tawwah* /vt/ **1** to cause to go astray. *beet-u ma-ytawwah-ʃ* his house is not difficult to find. **2** to cause to forget. *m-aɛraf-ʃ' ʕeeh illi tawwah-ha min baal-i* I don't know what made me forget about it. - vn *tatwiih*; ava/pva *mitawwah*.
اتّوه *ʕittawwah* /vi/ to be led astray. - iva *mittawwah*.

ت و و
توّ *taww* particle indicating the immediate occurrence of an action. *tawwu gayy* (1) he has just arrived. (2) he'll soon be here. *tawwina nazliin* (1) we've just come down. (2) we are just going down. *tawwaha wakla* she's just eaten.
¶ *tawwan* and *fit-taww* /adv/ immediately. *ḫ-agii-k fit-taww' (wil-laḫẓa)* I will come to you immediately. - *taww' ma* /conj/ as soon as, immediately after. *taww' ma nzilna mil-ʕutubiis xadna taks* right after we had got off the bus, we took a taxi. *taww' ma nxallaṣ if-fuɤl[a] ḫa-nfuut ɛaleek* as soon as we finish work, we'll drop in on you.

ت و ی
متوی، مثوی *matwa* /n pl *mataawi*/ refuge, shelter. *ma-luu-ʃ matwa* he's homeless.
تاوی *taawa* /vt/ **1** to shelter, protect, give refuge to. *laazim titaawi l-ɛiyaal mil-bard* you must protect the children from the cold. **2** to cause to disappear, hide away. *ʕil-mudiir taawa nuṣṣ il-mizaniyya* the director spirited half the budget away. - vn *mitawiyya*; ava/pva *mitaawi*.
اتّاوی *ʕittaawa* /vi/ **1** to take or be given refuge. **2** to be hidden away. - ava/iva *mittaawi*.

ت ی ب
تیب *tiib* <prob Fr *type*> /n/ distinct (facial) type, distinct character (especially in the terminology of theatre and film-making). *miʃ mafruuq ʕinnaha tkuun gamiila ɋadd' ma tkuun liiha tiib* she's not supposed to be pretty so much as possessed of a distinct (facial) character.

ت ی ب س س
تایباس *taybass* <Fr *taille basse*> /adj invar/ low-waisted (dress etc.).

ت ی ب ل س
تیوبلس *tiyublis* <Engl> /adj invar/ tubeless. *ʕiţaraat tiyublis* tubeless tyres.

ت ی ت
تیتة *teeta* <perh Gr *têthê*> /n/ *[children]* title of, and polite form of address to, an elderly woman, especially a grandmother.

ت ي ت ر
تياترو *tiyatru* <It *teatro*> /n pl *tiyatraat/ [obsol]* theatre.

ت ي ت ل
تيتل *teetal* /n pl *tayaatil/* **1** variety of wild goat. **2** Don Juan, skirt-chaser.

ت ي ج
تيج *tiij* (also *tiif* or *tiifa*) <Fr *tige*> /n pl *ʕatyaaj, tiyaaj/* **1** cable (of the type used in vehicles). *tiij faraamil* brake-cable. *tiij dibriyaaj* steel cable joining clutch pedal and disc. **2** pawl.

ت ي ح
انتاح *ʕintaaḥ* /vi/ to be allowed, permitted, or made possible. - iva *mintaaḥ*.
أتاح *ʕataaḥ* /vt/ to allow, permit, make possible (to or for s.o.). *ʕana ʃaakir illi ʕataḥt-i-li furṣit ziyaarit il-maṣnaɛ* I am grateful for your giving me the chance to visit the factory. -/the literary passive also occurs/ *ʕutiḥ-li zyaart il-maṣnaɛ* I was allowed to visit the factory. - vn *ʕitaaḥa*; ava *mutiiḥ*; pva *mutaaḥ*.

ت ي ر
تيّار *tayyaar* /n pl *-aat/* **1** current (of water, air etc.). *xallii-k ɛaayim maɛa t-tayyaar* keeping swimming with the current! **2** *[elec]* current. *tayyaar mitvayyar* alternating current. **3** trend, current of opinion. *bi-tɛabbar ɛan tayyaar* it expresses a trend.

ت ي ر ه
تيرو *tiiruh* <It *tiro*> /n pl *-aat/* arena where the shooting of clays or pigeons is the object of betting.

ت ي ز
تيزة *teeza* <T *teyze*> /n/ *[obsol]* title of, and polite form of address to, an elderly woman, especially a relative.

ت ي س
تيس *tees* /n pl *tuyuus/* **1** billy goat. **2** stolid fool, dolt. *filuus maɛa tyuus [prov]* it's oafs who have the money.
تيّس *tayyis* /vi/ to become stupefied. *ʕil-waaḥid tayyis baɛd il-ʕakl* one felt drugged after eating. - vn *tatyiis*; ava *mitayyis*.

ت ي ش see ت ي ج : *tiif, tiifa*

ت ي ف و د
تيفود *tayfuud* <prob Engl> /n/ typhoid fever.

ت ي ف و س
تيفوس *tayfuus* <prob Engl> /n/ typhus.

ت ي ك
تاك *taak (i)* /vi/ to wear out, become threadbare. - vn *tayakaan*; ava *taayik*.

ت ي ل
تيل *tiil* /n/ **1a** hemp. **1b** strong cloth made from hemp (used in particular for mattresses). **2** fibre. *tiil dibriyaaj [auto]* clutch disc of fibre. ‖*tiil il-faraamil* brake-pads. – /pl *ʕatyaal/* **3** linen. ‖*firiiṭ tiil* tape-measure.
تيلة *tiila* /n/ **1** *[text]* staple. *ɋuṭn' ṭawiil it-tiila* long-staple cotton. – /pl *tiyal/* **2** layer of fibres (in a tyre). **3a** *[naut]* fore-lock. **3b** *[eng]* split pin.
¶ *bit-tiila* with great difficulty.
تيّل *tayyil* /vt/ to secure (a bolt or the like) with a forelock or split pin. - vn *tatyiil*; ava/pva *mitayyil*.

ت ي م [1]
تيم *tayyim* /vt/ to enthral by love, infatuate. - vn *tatyiim*; ava *mitayyim*; pva *mutayyam*.
اتّيم *ʕittayyim* /vi/ to be or become enthralled by love, be or become filled with infatuation. - ava/iva *mittayyim*.

ت ي م [2]
تيم *tiim* <Engl> /n pl *ʕatyaam/* **1** team (in football etc.). **2** round (in the shooting of pigeons or clays).

ت ي م و ر
تيمور *taymuur* <prop name *Taymur*>: *manga taymuur* large dark-green variety of mango. - also *timuur*.

ت ي ن
تين *tiin* (also *tiin barfuumi*) /coll n/ fig(s). ‖*tiin fooki* prickly pear(s) (Opuntia ficus indica). - *tiin il-fiil* great cardamom, black amomum (Amomum granum paradisi). - *tiin binvaali* banyan.
تينة *tiina* /unit n, pl *-aat/* a fig.

[1] (ت ي ه)
تيه *teeh'* /fem n, pl *-aat/* third letter of the Arabic alphabet. - also *taa, taaʕ, tih*.
تيه *teeh*[2], *tiih* /n/ pride, haughtiness, self-assertion.
تيه *teeh*[3] <Engl> /n/ *[plumb]* T-joint.

[2] ت ي ه see ت و ه : *taayih*

ت ی و ن -
تیونینج *tiyuuning* <Engl> tuning. *dayra tiyuuning [elec]* tuning circuit.

ت ی ی ی ر
تیّیر *tayyeer* <Fr *tailleur*> /n pl *-aat/* woman's two piece suit (jacket and skirt).

ث

ث ء see س ه

ث ء ب see ت و ب [2]

ث ء ت ك see س ء ت ك ى

ث ء ث ء
ثأثأ θaʃθaʃ /vi/ to lisp. - vn θaʃθaʃa; ava *miθaʃθaʃ*.

ث ء ر see ت ا ر [2]

ث ب ت see س ب ت [1]

ث خ ن see ت خ ن

ث ر ر see ص ر ر [2]

ث ر د see م ت ر د

ث ر و see س ر و [2]

ث ر ى see س ر ى [3]

ث ع ب see ت ع ب [2]

ث ع ب ل see ت ع ل ب

ث غ ر see س غ ر

ث ف ل see ت ف ل

ث ق see و س ق [2]

ث ق ب see ت ق ب

ث ق ف see س ق ف [3]

ث ق ل see ت ق ل

ث ك ن see س ك ن [4]

ث ل ث see ت ل ت

ث ل ج see ت ل ج

ث ل م see ت ل م

ث م ر see س م ر [4]

ث م م see س م م [3]

ث م ن see ت م ن [1] and ت م ن [2]

ث ن ى see ت ن ى [1] and ت ن ى [2]

ث و ب [1] see ت و ب [3]

ث و ب [2] see س و ب

ث و ر see ت و ر and س و ر [1]

ث و م see ت و م [1]

ث و ى see ت و ى

ج

ج ا see ج ى . *ga*

ج ا ج ا
جاجا *gaaga* /prop n/ jinni of guidance (invoked in spells and charms).

ج ا د
جاد *jaad* <Fr> /n/ jade.

ج ا ر see ج و ر : *gaar, gaara²*

(ج ا ز)
جاز *gaaz¹* <perh T *gaz* from Fr> /n/ paraffin, kerosene. *lambıt gaaz* kerosene lamp.
جاز *jaaz* <Engl> /n/ jazz. *fırqit jaaz* a jazz-band.

ج ا ن see ² ج ن ن : *gaan*

ج ا ه
جاه *gaah* /n/ honour, prestige, status. *la gaah wala maal yihimm-ı-ni* neither status nor wealth interests me. ‖*ya gaah in-nabı* exclamation of awe ≈ oh, wow! isn't that something!, as in *ya gaah ın-nabi ḥıttıt ʃakla* oh, wow! what a meal! - *ʃana f-gaah in-nabı* ≈ I beseech you! - *ʃilaah-i w-ʃınta gaah-i* invocation to God for his aid in performing a task, as in *ʃilaah-i w-ʃinta gaah-i tkuun min ın-nagḥın* may God grant you success!

ج ا و
جاوه *gaawa* **1** /prop n/ Java. **2** /coll n/ Javanese (people).
جاوى *gaawi* **1** /adj */ Javanese. *buxuur gaawi* benzoin. **2** /n/ *[bot]* styrax. ‖*sabyit ıl-gaawi* friar's balsam.

ج ا ى
جاى *gaay, gaay* <Copt> /interj/ help! ‖*gaay ya huuh* help me! come to my aid!

ج ا ى ر
جاير *gaayir* <poss Fr *cahier*> /n/ standard size of paper 58 by 82 centimetres.

ج ء ر
جأر *gaʃʃar* /vt/ to push, force. ‖*gaʃʃar dimaaɣ-u fıl-muʃkila l-ɣaayit ma ḥall-a-ha* he put his mind to the problem until he solved it. - ava *migaʃʃar*.
اجأر *ʃitgaʃʃar* or *ʃıggaʃʃar* /vi/ to be pushed, be forced. - iva *mıtgaʃʃar*.
جائر *gaaʃır* /vi/ to object, resist, protest. *bı-yḥibb' ygaaʃır fıl-faaḍı wıl-malyaan* he likes to argue whether he has a good reason or not. - vn *mıgaʃra*; ava *mıgaaʃir*.
اجائر *ʃıtgaaʃır* or *ʃıggaaʃır* /vi/ **1** = *gaaʃır*. **2** (impersonal) passive of *gaaʃir*. *ḥatta taman waraqıt il-busṭa kamaan yıtgaaʃir fii* is there even to be an argument over the price of the stamp! - iva *mitgaaʃir*.

(ج ب ب)
جبّ *gibb* /n/ deep hole, pit. ‖*wıqıʕ fi-gıbb* he got into a difficult problem, he got in a fix.
جبّه *gıbba* /n pl *-aat, gıbab*/ buttonless long outer robe open down the front, worn by Muslim clergy and well-to-do villagers. ‖*ʕads' b-gıbba* unhulled lentils.
جبّة *gabba'* <prob Copt> /n/ five-stones, jacks. - also *kabba*.

ج ب د
جبد *gabad (i)* /vt/ to seize hold of, grasp (especially with the hand). *gabad-ni min ṭooq-i* he seized me by the collar. *ḥasseet bi-ḥaaga gabadit-ni l-taḥt il-mayya* I felt something dragging me down under the water. - vn *gabd, gabadaan*; ava *gaabid*; pva *magbuud*.

جبّادة *gabbaada* /n pl *-aat*/ long-handled fruit-hook.
اتجبد *ʔitgabad* or *ʔiggabad* /vi/ to be seized, be grasped (especially with the hand). - iva *mitgibid*.
انجبد *ʔingabad* = *ʔitgabad*. - iva *mingibid*.

ج ب ر ¹
جبر *gabar¹ (u)* /vt/ **1** to set (broken bones). *ʔil-migabbaraati gabar ʕaḍmit diraaʕ-i* the bone-setter set the bone of my arm. **2** to round up to a whole unit. *ʕumr-u-hum ma gabaru ksuur il-gineeh* they never round a sum of money up to a pound (when they're going to give it to someone). **3** (also *gabar xaaṭir* and *gabar bi-xaaṭir*) **3a** to soothe (s.o.'s feelings) with a kind word or deed, treat (s.o.) charitably, help out (s.o. in distress). *da kaan raagil ṿalbaan w-ana gabart¹ xaṭr-u* that man was in a bad way and I helped him. **3b** to bribe. *miʃ raaḍi ymaʃʃi l-waraq - yimkin yikuun ʕayz-ak tugbur bi-xaṭr-u* he's not prepared to finish with the papers - perhaps he wants you to give him something. – /vi/ **4** to sell out. *lissa ma-gabarnaa-ʃ* we still haven't run out. *ʔil-burtuqaan gabar* (1) the oranges are sold out. (2) the oranges are finished. ‖*da kaan zamaan wi-gabar* that was in the old days, that's past history. **5** to recover, get over a crisis. - vn *gabr, gubraan, gubraniyya*; ava *gaabir*; pva *magbuur*.
جبر *gabr* **1** /vn/ ‖*gabr il-baḥr* see *xaliig*. **2** /n/ *ʔil-gabr* algebra.
جابر *gaabir* /n/ **1** male given name. **2** Healer (epithet of God). ‖*ya gaabir* cry of the vendor of cooked offal.
جبارة *gubaara, gibaara↓* /n pl *-aat, gabaayir*/ splint.
جبيرة *gibiira, gabiira* /n pl *gabaayir*/ splint.
اتجبر *ʔitgabar¹* or *ʔiggabar¹* /vi/ passive of *gabar¹*. - iva *mitgibir*.
انجبر *ʔingabar¹* = *ʔitgabar¹*. - iva *mingibir*.
جبّر *gabbar* /vt/ to set (broken bones). - vn *tagbiir*; ava/pva *migabbar*.
مجبّر *migabbar* /n */ bone-setter.
مجبّراتي *migabbaraati* /n pl *-yya*/ bonesetter.
اتجبّر *ʔitgabbar¹* or *ʔiggabbar¹* /vi/ to be set correctly (of broken bones). - iva *mitgabbar*.

ج ب ر ²
جبر *gabar² (i)* /vt/ to force, compel. *gabar-ni ʕal-maʃy* he forced me to walk. - vn *gabr*; ava *gaabir*; pva *magbuur*.
جبري *gabri* /adj/ compulsory. *ʔit-tasʕiira l-gabriyya* the compulsory fixed-price.
جبر *gubr* /n/ **1** cruelty. *ʕeeh ig-gubr¹ da ḍarb-ak lu ma-ykun-ʃ¹ bif-fakl¹ da* how cruel! you shouldn't beat him like that! **2** insolence. *ya gubr-a-ha lamma tqabbaḥ maʕa gran-ha* what a nerve she has to call her neighbours bad names!
جبروت *gabaruut* /n/ **1** omnipotence, might. **2** source of all authority (one of the five parts of the Sufi cosmos).
جبّار *gabbaar* /adj/ **1** /pl *gababra*/ colossal, huge. *ʕimaara gabbaara* an enormous building. *riggaala gababra* huge men. **2** /pl *-iin*/ ruthless, despotic. *riggaala gabbariin* ruthless men. *kullu zii ʕaahatin gabbaar [prov]* every person with a physical defect has a cruel streak. – /n/ **3** Omnipotent One (epithet of God).
جبايِر *gabaayir* /pl n/ high and mighty behaviour. *(ya ʕeen-ak) ya gabayr-ak* what a nerve you've got!
اتجبر *ʔitgabar²* or *ʔiggabar²* /vi/ to be forced, be compelled. - iva *mitgibir*.
انجبر *ʔingabar²* = *ʔitgabar*. - iva *mingibir*.
اتجبّر *ʔitgabbar²* or *ʔiggabbar²* /vi/ to behave ruthlessly. - vn *tagabbur↑*; ava *mitgabbar, mutagabbir↑*.
أجبر *ʔagbar↑* = *gabar²*. - vn *ʔigbaar*; ava *mugbir↑*; pva *mugbar*.
إجباري *ʔigbaari* /adj/ compulsory. *taʔmiin ʔigbaari* compulsory insurance.

ج ب ر د –
جبردين *gabardiin, gibardiin* <Engl> /n/ gabardine.

ج ب ر ي ل
جبريل *gibriil* (also *gibriin↓*) /prop n/ **1** male given name. **2** the archangel Gabriel (in Islamic belief, the angel mediating divine inspiration).

ج ب ر ي ن see ج ب ر ي ل : *gibriin*

ج ب ر ي ه
جبريه *gabariih* <Fr *gabarit*> /n pl *-aat*/ model (in naval architecture).

ج ب س
جبس *gibis (a)* /vi/ to stiffen, thicken (of dough, paste etc.). - vn *gabasaan*; ava *gaabis*.
جبس *gibs* /n/ **1** plaster. **2** gypsum, plaster of Paris.
جبّاسة *gabbaasa* /n pl *-aat*/ gypsum works, limestone works.
جبّس *gabbis* /vt/ **1** to put plaster on. *gabbisuu-lu rigl-u* they put his leg in plaster. **2** to cause (e.g., dough) to thicken or stiffen. – /vi/ **3** to stiffen, harden, set. *ʔiif lil-maʕguun fiwayyit zeet ʔaḥsan yigabbis* add a little oil to the putty or it may get too hard to use. ‖*muxx-u gabbis* ≈ his mind seized up. - vn *tagbiis*; ava/pva *migabbis*.

اتجبّس ʃitgabbis or ʃiggabbis /vi/ passive of *gabbis*. - iva *mitgabbis*.

ج ب ل [1]
جبل *gabal* /n/ **1** /pl *gibaal*/ hill, mountain. *gibaal ık-kuḥl' tifnii-ha l-maraawid [prov]* ((even) mountains of kohl are worn away by kohl-probes) ≈ water wears away a stone. **2** /no pl/ arid desert land (as opposed to cultivated land).
جبلاية *gabalaaya* /n pl *-aat*/ (man-made) mound or hillock, rockery.
جبلى *gabali* /adj/ **1** arid and hilly. **2** mountainous. ‖ *ʃaraanib gabali* hares.

ج ب ل [2]
جبلّة *gibilla* /n pl *-aat/ [abus]* natural disposition. *raagil gibillit-u waṭya* a base-natured man.

ج ب ل ا ن
جوبلان *gublaan* <Fr *les Gobelins*> /n/ Gobelin tapestry, (also loosely) machine-woven tapestry used for upholstery

ج ب ن [1]
جبنة *gibna* /n pl *giban*/ cheese.
جبّن *gabbin* **1** /vt/ to make into cheese. **2** /vi/ to curdle (of milk). - vn *tagbiin*; ava/pva *migabbin*.
اتجبّن *ʃitgabbin* or *ʃiggabbin* /vi/ to be made into cheese. - iva *mitgabbin*.

ج ب ن [2]
جبن *gabun, gubun, gibin (u, i)* /vi/ to become cowardly. - vn *gubn*.
جبن *gubn* /n/ cowardice.
أجبن *ʃagban* /el/ more/most cowardly. *ʃagban min il-gubn* more cowardly than cowardice itself.
جبان *gabaan* /n pl *gubana, gabanaat*↓/ coward.
استجبن *ʃistagbin* /vt/ **1** to consider cowardly. **2** to select for cowardliness. — /vi/ **3** to act in a mean way. - vn *ʃistigbaan*; ava/pva *mistagbin*.

ج ب ن [3]
جبين *gibiin* /n pl *gibína*/ forehead, brow. *min ɛaraq gibiin-i* with the sweat of my brow, by my own efforts. ‖ *ʃilli maktuub ɛag-gibiin laazim tifuuf-u l-ɛeen [prov]* ≈ what is destined will be fulfilled.
جبّانة *gabbaana* /n pl *-aat*/ cemetery.

ج ب ن ي
جبنيوت *gabanyoot* <Copt> /n/ *[Chr]* **1** Pater Noster. **2** formal registration of betrothal, and the accompanying ceremony.

ج ب ه
جبه *gabah (a)* /vt/ to confront (s.o.) in such a way as to embarrass. *ʃana magbuuh minkum* I am too embarrassed to face you. - ava *gaabih*; pva *magbuuh*.
جبهة *gabha* /n/ **1** /pl *-aat*/ front (in war). **2** /pl *gibaah*/ forehead, brow.
اتجبه *ʃitgabah* or *ʃiggabah* /vi/ to be caused embarrassment (by confrontation with s.o. or s.th.). - iva *mitgibih*.
جابه *gaabih* /vt/ to face, confront. *laazim nigabh-u bil-ḥaqiiqa* we must confront him with the truth. *da gabaan ma-yiqdar-ʃ' ygaabih ʃayy' muʃkila* he is too cowardly to face any problem.
اتجابه *ʃitgaabih* or *ʃiggaabih* /vi/ to be confronted (with s.th.). - iva *mitgaabih*.

ج ب ي [1]
جبّى *gabba* [2] /vi/ to spend money (on s.o.) in order to gain influence. *ʃaṣrif filuus-i zayy' ma-na ɛaayiz - huwwa bi-ygabbi ɛalayya* I'll spend my money just as I choose - does he support me (and so have a right to interfere)? - ava *migabbi*.
اتجبّى *ʃitgabba* or *ʃiggabba* /vi/ **1** = *gabba* [2]. **2** (impersonal) passive of *gabba* [2]. *ʃiḥna miʃ min illi yitgabba ɛaleehum* we're not the type of people to live off others! - ava/iva *mitgabbi*.

ج ب ي [2]
جبية *gubya* /n pl *gubay*/ *[rur]* fish snare.

ج ت ا ر
جتار *gitaar* <prob Fr> /n pl *-aat*/ guitar.

ج ت ت
جتّة، جتة *gitta* /n pl *gitat*/ (human) body. *rama* (or *laqqaḥ*) *gittit-(u) ɛala* to be a nuisance to, impose oneself upon, force one's attention upon, as in *ʃaḥḥaat raami gittit-u ɛaleek* a beggar imposing himself on you. ‖ *ʃallaah la yirmii-lak gitta f-ʃarḍ [beggars]* may God not cast any of your family to earth! - *da gitta [deris]* ≈ he's very well built! - *bi-yinhaʃu f-gittit-i* they talk savagely about me behind my back.
جثّة *gussa* /n pl *gusas*/ corpse.

ج ت ر
جتر *gitir, gitr* <prob Fr *guêtre*> /n pl *gitar*/ *[mil]* pair of gaiters.

ج ت و ه
جاتوه *gatooh* <Fr *gâteau*> /coll n/ pastries, small cake(s).
جاتوهاية *gatohaaya* /unit n, pl *gatohaat, gatohayaat*/ a pastry, a small cake.

ج ث ث see ج ت ت

ج ح ا
جحا، جحى *guḥa* /prop n/ Goha, a character in folk stories, renowned for his direct, simplistic and shrewd approach to life. ‖*musmaar guḥa* pretext, excuse for keeping one's foot in the door. - *beet guḥa* maze, labyrinth. - *huwwa guḥa ʕakbar walla-bn-u* ≈ who are you trying to kid? I wasn't born yesterday. - *guḥa ʕawla b-laḥm[i] toor-u [prov]* one has first claim on one's own possessions. - *ʠaalu ya guḥa ɣidd[i] moog il-baḥr.* - *ʠaal il-gayyaat ʕaktar mir-rayḥaat [prov]* ≈ future opportunities outnumber those in the past, there will always be a chance to get even.

ج ح د
جحد *gaḥad (i, a)* **1** /vt/ to receive with ingratitude. *gaḥad niɣmit rabb-u* he was ungrateful for God's goodness. **2** /vi/ to become callous, become insensitive. - vn *guḥd, gaḥd, guḥuud*; ava *gaaḥid*; pva *magḥuud*.
جحود *gaḥuud* /adj * / ungrateful.
اتجحد *ʕitgaḥad* or *ʕiggaḥad* /vi/ to be received with ingratitude. - iva *mitgiḥid*.
انجحد *ʕingaḥad* = *ʕitgaḥad*. - iva *mingiḥid*.

ج ح ر
جحر *gaḥar (u, a)* /vt/ to bury (s.o.) in a hole. *ʕallaah yigḥar rooḥ-u maṭraḥ ma raaḥ* ≈ may he roast in hell! - vn *gaḥr*; ava *gaaḥir*; pva *magḥuur*.
جحر *guḥr* /n pl *guḥuur, giḥaar*/ burrow, hole (of an animal). *guḥr[i] fraan* rat hole. ‖*guḥr[i] diib yikaffi miyya w-miit ḥabiib [prov]* there will always be room in one's home for a friend.
اتجحر *ʕitgaḥar* or *ʕiggaḥar* /vi/ passive of *gaḥar*. *ʕahu-tgaḥar fi-sittiin dahya* ≈ he went to the devil! thank God we got rid of him! - iva *mitgiḥir*.
انجحر *ʕingaḥar* = *ʕitgaḥar*. - iva *mingiḥir*.
جحّر *gaḥḥar* /vi/ to stare wide-eyed. *maa-lak bi-tgaḥḥar-li kida b-ɣenee-k* what are you staring at me like that for? - vn *tagḥiir*; ava *migaḥḥar*.

ج ح ش
جحش *gaḥʃ* /n pl *guḥuuʃ, guḥúʃa*/ young donkey. ‖ *ʕin kunt[i] f-balad yuɣbudu g-gaḥʃ[i] ḥiff[i] wi-ddii-lu [prov]* ≈ when in Rome do as the Romans do. - *wala fiif gaḥʃ[i] yuxrug minha b-bardaɣt-u* ≈ it's a very tight spot indeed.
جحّش *gaḥḥaʃ* /vi/ to behave brusquely. - vn *tagḥiiʃ*; ava *migaḥḥaʃ*.
جاحش *gaaḥiʃ* /vi/ to behave defiantly. *ya ḥmaar ya ʁabi baṭṭal tigaaḥiʃ maɣa lli ʕakbar minnak* you stupid ass, stop defying your elders! - vn *migaḥʃa*; ava *migaaḥiʃ*.

ج ح م
جحم *gaḥam (i)* **1** /vt/ to send to hell. *dahya tigḥim-u* may a disaster cast him into hell! **2** /vi/ to stare (at s.o. or s.th.) in envy, put the evil eye (on s.o. or s.th.). *min saaɣit ma ɣen-ha gaḥamit fil-waad raɣad ɣayyaan* the moment she set her evil eye on the boy he fell ill. - vn *gaḥm*; ava *gaaḥim*; pva *magḥuum*.
جحمة *gaḥma* instance noun of *gaḥm*. *gaḥma taxd-u* to hell with him!
جحيم *gaḥiim* /n/ hell, hellfire. *ʕana ɣaayif fi-gaḥiim* I'm living in hell.
اتجحم *ʕitgaḥam* or *ʕiggaḥam* /vi/ to go to hell, die (of an enemy). - iva *mitgiḥim*.
انجحم *ʕingaḥam* = *ʕitgaḥam*. - iva *mingiḥim*.
جحّم *gaḥḥam* /vi/ to stare in fury, envy or hatred. *bi-ygaḥḥam-li b-ɣenee ka-ʃinn[i] ḥa-yiftiris-ni* he stares at me as if he were going to devour me. - vn *tagḥiim*; ava *migaḥḥam*.

ج ح ظ
جحظ *gaḥaẓ↑ (a)* /vi/ to bulge, protrude (of the eyes). *ɣenee-ha gaḥaẓit lamma ʠarraṭ il-ḥabl[i] ḥawaleen raʠabit-ha* her eyes bulged as the rope tightened round her neck. - vn *guḥuuẓ*; ava *gaaḥiẓ*.

ج خ خ
جخ *gaxx (u, i)* /vi/ **1** to spin a yarn, tell tall stories. **2** to squirt. - vn *gaxx, gaxaxaan*; ava *gaaxix*.
جخّاخ *gaxxaax* /n * and pl *gaxxaaxa*/ fibber, hot-air merchant.
اتجخّ *ʕitgaxx* or *ʕiggaxx* /vi/ (impersonal) passive of *gaxx*. *ʕahu itgaxx[a] ɣaleek* there you are - you've been led up the garden path! - iva *mitgaxx*.
انجخّ *ʕingaxx* = *ʕitgaxx*. - iva *mingaxx*.

ج د د[1]
جدّ *gadd[1] (i)* /vi/ to occur newly. *gaddit ẓuruuf* things came up unexpectedly. *gaddit ɣaleehum sarwa* they suddenly came into money. *ḥa-ygidd[a] ɣaleek naas*

you'll come across new people. *ma-gadd'-ſ ɛaleeha ɦaaga* she is still the same, she is not likely to change or improve. -vn *gadadaan*; ava *gaadid*.

جديد *gidiid* /adj pl *gudaad*/ **1** new. *xad ɋamiiş gıdiid* he took a new shirt. -/adverbially/ *lissa mitɛayyina gdiid* she's just newly appointed. ‖*gidiid lang* brand-new. -*gidiid fi-gidiid* all new, as in *labsiin gıdiid fi-gidiid ɛafaan il-ɛiid* wearing completely new clothes for the feast. -*yoom tamanya fil-gidiid* the eighth of next month. **2** different. *dawwar-lak ɛala waziifa gdiida* find yourself a diff[e]rent job. — /n/ **3** *[obsol]* one fortieth of a piastre, coin one fortieth of a piastre in value.

¶ *min gidiid* /adv/ anew, again. *min ſawwil wı-gdiid* anew, all over again.

أجدد *ſagdad* /el/ newer/newest.

أجدّ *ſagadd* = *ſagdad*.

جدّد *gaddid* /vt/ **1** to renew. *laazim ſagaddid ruxşit is-siwaaɋa* I must renew my driving licence. **2** to renovate, restore. *tagdiid il-ſasaar il-ſislamiyya* the renovation of Islamic monuments. **3** to reconstitute. **4a** to extemporize (within the structure of a song). **4b** to innovate (in art). -vn *tagdiid*; ava/pva *migaddid*.

تجديدات *tagdidaat* /pl n/ innovations, renovations.

اتجدّد *ſitgaddıd* or *ſiggaddid* /vi/ **1** to be renewed. **2** to be renovated, be restored. **3** to be reconstituted. -iva *mitgaddid*.

استجدّ *ſistagadd* /vi/ **1** to occur newly. *li-ɤaayit ma tistagadd[a] ɦaaga tanya* until something else crops up. **2** to be newly arrived (in employment etc.). -vn *ſistigdaad*; ava *mustagıdd, mustagadd*.

استجدد *ſistagdıd* /vt/ **1** to select for newness. **2** to consider new. -ava *mistagdid*.

ج د د [2]

جدّ *gadd[2] (i)* /vi/ to strive, try hard. *min gadd' wagad [proverb]* he who strives will find his reward. *ma-huu-ſ gaadd' ſ-ɛamal-u* he makes no real effort in his work. -vn *gidd, gadd*; ava *gaadd', gadd*.

جدّ *gadd[3]* **1** /n/ earnestness, seriousness. *bi-yitkallim kitiir wı-lamma yiigi g-gadd'* (or *lig-gadd'* or *fig-gadd'*) *ma-yiɛmil-ſ' ɦaaga* he talks a lot but when it really comes to action he doesn't do a thing. **2** /adj invar/ earnest, serious. *sitt' gadd* a serious-minded woman. *ſiftaɤalu fuɤl' gadd* they worked very hard. ‖*ɋalabuu-ha gadd* (after talking light-heartedly) they became argumentative. -/adverbially/ *b-akkallim gadd* I mean what I say, I'm speaking in earnest.

¶ *bı-gadd* or *mın gadd* /adv/ seriously, in earnest. *ſinta b-titkallim bi-gadd* do you really mean what you say?

جدًا *giddan* /adv/ **1** very. *gaayiz giddan* it's very possible. *da ɤariib giddan* this is very strange. ‖*taɋdiir gayyid giddan [acad]* ranking of Very Good (between Excellent and Good). **2** very much. *ſid-dawa nafaɛ-ni gıddan* the medicine benefited me very much.

جدّي *giddi* /adj/ serious.

جديّة *giddiyya* /n/ seriousness, gravity. *bi-(kull') giddiyya* earnestly, seriously. *mıſ baayin ɛalee waaxid il-mawḍuuɛ bı-giddiyya* he does not seem to be taking the matter seriously.

ج د د [3]

جدّ *gidd* /n/ **1** /pl *guduud*/ grandfather. *ſabu gidd-ı* my great-grandfather. ‖*ſabban ɛan gidd* from generation to generation. **2** /pl *ſagdaad*/ ancestor, forefather.

جدّة *gidḍa* /n pl *-aat*/ grandmother.

ج د د [4]

جدّة *gadda* /prop n/ Jeddah.

ج د ر [1]

جدارة *gadaara* /n/ worth, worthiness. *bi-gadaara* deservedly. *faaz ɛan* (or *bi-) gadaara* (1) he deserved his success. (2) he had a comfortable win.

جدير *gadiir* /adj */ worthy, deserving.

أجدر *ſagdar* /el/ worthier/worthiest, more/most deserving, more/most appropriate. *ſana ſagdar minnak big-gayɋa* I deserve the prize more than you. *ſagdar-lak tibiiɛ-u* you'd do best to sell it.

ج د ر [2]

جدرى *gudari* /n/ smallpox. ‖*gudari mayya* or *gudari kaadib* chicken pox.

جديرى *gudeeri* /n/ chicken pox.

جدّر *gaddar[1]* /vi/ to be afflicted with pox. -vn *tagdiir*; ava *migaddar*.

مجدّرة *migaddara* /n/ dish of rice, lentils and onions (more often called *kufari*).

ج د ر [3]

جدار *gidaar, gadaar* /n pl *gudraan, gidaraat*/ wall.

جدّر *gaddar[2]* /vt/ to make a foundation for. *biyuut il-manţiɋa kull-a-ha mgaddara bil-ɦagar ig-giiri* all the houses in the area are built on a limestone foundation. -vn *tagdiir*; ava/pva *migaddar*.

اتجدّر *ſitgaddar* or *ſiggaddar* /vi/ passive of *gaddar*. -iva *mitgaddar*.

ج د ر [4]

جذر *gazr, gizr[1]* /n pl *guzuur*/ *[math]* root. *gazr' tarbiiɛi*

a square root. *gazr¹ takʕiibi* a cube root.

جذر *gidr, gizr²↑* /n pl *guduur, guzuur*/ **1** root. *gidr is-sinna* the root of the tooth. ‖*min gidr¹ ţayyib* of good stock. *-qaţaʕ gidr(-u)* he eliminated (him), he extirpated (him). *- gabit-u ʕala gduur raqabt-u* (1) she threw him flat on the ground. (2) she made him fall hopelessly in love with her. **2** emerald matrix (sold as a semi-precious stone). **3** *[coarse slang]* penis, prick. - also *gidl*.

جذر *gizr³* /n pl *guzuur*/ **1** basis, root, origin. *ʕil-mas ʕala laha guzuur min zamaan* the question has its roots in the past. **2** *[ling]* (Arabic) root.

جذّر، جذّر *gaddar³* /vi/ to become firmly rooted (of a plant). - vn *tagdiir*; ava *migaddar*.

ج د ع

جدع، جذع *gadaʕ* /n pl *gidʕaan*/ **1** /occasionally fem *gadaʕa*/ one possessed of one or more of the following groups of characteristics: (1) nobility of character and integrity. *ţiliʕ gadaʕ maʕaana w-qaam bil-waagib kull-u* he turned out to be a gentleman in his dealings with us and did all he could. (2) intelligence and application. *huwwa gadaʕ qawi f-fuṿl-u* he's very good at his job. (3) manly toughness and courage. *xallii-k gadaʕ - ḥa-txaaf min fiwayyit ʕiyaal* be a man! are you going to be scared by a few kids? **2** fellow, (young) man. *ya gadaʕ* informal (and sometimes somewhat reproachful) form of address to a (usually younger) man ≈ my man! my lad! see further under ج د ع ن

جدعة، جذعة *gadaʕa* /n pl *-aat*/ *[rur]* young she-goat.

أجدع *ʕagdaʕ* /el/ **1** more/most possessed of the qualities of a *gadaʕ*. **2↓** better/best. *ʕahu l-qizaaza di ʕagdaʕ min illi qabl-a-ha* this bottle is definitely better than the one before.

مجدع *magdaʕ↓* /adj invar/ having the qualities of a *gadaʕ*. *dool ʕawlaad magdaʕ bi-ṣaḥiiḥ* there are real men.

مجدعة *magdaʕa* /n/ quality of being a *gadaʕ*.

استجدع *ʕistagdaʕ* /vt/ **1** to select for being a *gadaʕ*. *ʕaʕaan tixawwif-hum istagdaʕ-lak waaḥid minhum wi-ḍrab-u* if you want to frighten them, get hold of one of their toughs and give him a beating. **2↓** to select for high quality. *ʕistagdaʕ qumaaʃ wi-faṣṣal-li minnu* choose some good-quality cloth and make it up for me. — /vi/ **3** to behave like a *gadaʕ*. *ʕistagdaʕ baqa w-haat illi ʕaleek* be a man and pay me what you owe! - vn *ʕistigdaaʕ*; ava *mistagdaʕ*.

ج د ع ن see also ج د ع

جدعنة *gadʕana* /n/ quality of being a *gadaʕ*.

اتجدعن *ʕitgadʕan* or *ʕiggadʕan* /vi/ **1** to behave in the manner of a *gadaʕ*. **2** to get a move on. *laazim yitgadʕan fiwayya f-fuṿl-u* he must get a bit of a move on in his work. - vn *gadʕana*; ava *mitgadʕan*.

ج د ف

مجداف، مجداف *migdaaf, mugdaaf* /n pl *magadiif*/ oar. ‖*kassar magadiif(-u)* ≈ to discourage (s.o), take the wind out of (s.o.'s) sails. - also *muqdaaf*.

جدّف، جدّف *gaddif* /vi/ **1** to row. *gihaaz tagdiif* rowing-exercise apparatus. **2** /vi/ *[Chr]* to blaspheme. *ya weel illi ygaddifu ʕala rabb-i-na* woe to those who abuse God!. - vn *tagdiif*; ava *migaddif, mugaddif↑*.

ج د ل ¹

جدل *gadal¹ (i)* /vt/ to braid, plait, twist. - vn *gadl, gadalaan*; ava *gaadil*; pva *magduul*.

جدلة *gadla* /n pl *-aat*/ **1** instance noun of *gadl*. **2** plait (of rope).

مجدول *magduul* /coll n/ ashlar.

مجدولة *magduula* /unit n, pl *magadiil*/ an ashlar (usually standardized at one metre square).

جديلة *gidiila* /n pl *gadaayil*/ braid, plait. *gaabit baruuka b-gadaayil* she got a wig with braids.

اتجدل *ʕitgadal* or *ʕiggadal* /vi/ to be braided, be plaited. - iva *mitgidil*.

جدّل *gaddil* /vt/ to braid, plait, twist (particularly rope). - vn *tagdiil*; ava/pva *migaddil*.

اتجدّل *ʕitgaddil* or *ʕiggaddil* /vi/ to be braided, be plaited, be twisted. - iva *mitgaddil*.

ج د ل ²

جدل *gadal²↑* /n/ debate, controversy, argument, dispute. *ʕumr-u ma-yḥibb il-gadal maʕa mraat-u* he never likes to argue with his wife.

¶ *gadalan* /adv/ for the sake of argument. *nifriq gadalan ʕinn il-kalam-da ṣaḥiiḥ* let us suppose just for the sake of argument that what is said is true.

جادل *gaadil* **1** /vt/ to argue with, dispute with. *ma-tgadil-nii-ʃ* don't argue with me! **2** /vi/ to discuss, argue. *fiqil yigaadil maʕaaya* he went on arguing with me. ‖*yigaadil fil-baaţil* to argue just for the sake of arguing. - vn *migadla, mugadla, gidaal*; ava *migaadil*.

مجادلة *mugadla* /n pl *-aat*/ debate, controversy, dispute.

اتجادل *ʕitgaadil* or *ʕiggaadil* /vi/ **1** to argue. **2** to be argued with. - ava/iva *mitgaadil*.

ج د ل ³

جدل *gadal³ (i)* /vt/ to transplant. - vn *gadl*; ava *gaadil*; pva *magduul*.

جدل *gidl* /n pl *guduul*/ root. *li-ʁaayit ma f-ʃatl' yiqrab guduul* until the seedling puts down roots. - also *gizr, gidr*.
اتجدل *ʕitgadal* or *ʕiggadal* /vi/ **1** to be transplanted. **2** to get established, put down roots (of a plant). *ʕif-ʃital bi-titgidil il-ʕawwil fil-maʃtal* first the seedlings get established in a nursery. **3** *[abus]* to settle down, establish oneself. *ʕitgidil fi-maqraḥ-ak* keep still, don't move! - ava/iva *mitgidil*.

ج د ل [4] see ج ل [1] د : *gaddaal*

ج د و ل
جدول *gadwal* /n pl *gadaawil*/ **1** chart, list. *gadwal ʕaʁmaal* agenda. **2** schedule, timetable. **3** table (arithmetical, logarithmic, statistical etc.). **4** *[print]* column.
جدول *gadwil* /vt/ to schedule, list. *laazim nigadwil tafaṣiil if-fuṛl* we should make a list of the work details. *ʁayziin nigadwil diyun-na* we want to fix dates for (repaying) our debts. - vn *gadwala*; ava/pva *migadwil*.
مجدول *migadwil* /pva/ ‖ *ʁuqda mgadwila [naut]* carrick bend.
اتجدول *ʕitgadwil* or *ʕiggadwil* /vi/ to be scheduled, be listed. - vn *tigadwiil*; iva *mitgadwil*.

ج د و ن
جادون *gaduun, gadoon* <Fr *guidon*> /n pl *-aat, gawadiin*/ handlebar (of a bicycle).

ج د ی
جدی *gidy* /n pl *gidyaan*/ young goat, kid.
الجدی *ʕil-gady* /n/ *[astrol]* Capricorn. *madaar il-gady* the Tropic of Capricorn.

ج ذ ب see ج ز ب

ج ذ ر see ج د ر [4]

ج ذ ع see ج د ع and ج ز ع [4]

ج ذ ف see ج د ف

ج ذ م see ج ز م [3]

ج ر ا ج see ج ر ش [2] : *garaaj*

ج ر ا ش see ج ر ش [2] : *garaaʃ*

ج ر ا م
جرام *giraam* <Fr> /n pl *-aat*/ gramme.

ج ر ء [1]
جریء *gariiʔ* /adj * and pl *guraʔa*/ **1** audacious, courageous, daring. **2** impudent, cheeky.
أجرأ *ʔagraʔ* /el/ more/most audacious.
اتجرّأ *ʕitgarraʔ* or *ʕiggarraʔ* /vi/ to dare, have the courage. *ḥa-titgarraʔ tiḥuṭṭ' ʕimḍit-ak ʁaleeha* will you dare to sign it? - ava *mitgarraʔ*.
اتجارأ *ʕitgaaraʔ* or *ʕiggaaraʔ* /vi/ to dare. *ʕitgaaraʔ wi-daxal yinadii* he summoned up his courage and went in to call him. - ava *mitgaaraʔ*.
استجری *ʕistagra* /vi/ to dare (usually negative or in contexts of challenging). *ma-yistagraa-ʃ* he wouldn't dare! *tistagri tkallim-ni kida* do you have the nerve to talk to me like that?! - ava *mistagri*.
استجرأ *ʕistagraʔ* /vt/ to select for courage. *ʕistagraʔ-lak waaḥid yiquum bil-ʁamaliyya* find a brave man to do the job. - vn *ʕistigraaʔ*; ava/pva *mistagraʔ*.

ج ر ء [2] see ج ر ی [1] : *ʕigraaʔ, ʕigraaʕi*

ج ر ب [1]
جرب *garrab'* /vt/ **1a** to try out, test. *garrab faraamil il-ʁarabiyya* he tried out the car brakes. **1b** *[Chr]* to tempt, put to the test. *ʕif-ʃiṭaan bi-ygarrab-na* the devil tempts us. **2** to experience, go through. *yaama l-waaḥid garrab* one has been through a lot. ‖ *ʕisʔal migarrab wala tisʔal ṭabiib [prov]* (seek the advice of the one who has experienced (an illness) rather than that of the doctor) ≈ experience counts for more than theories. - vn *tagriib*; ava/pva *migarrab*.
تجریبی *tagriibi* /adj/ experimental. *ɣaara tagribiyya* test raid, practice raid.
تجربة *tagriba* or *tagruba* /n pl *-aat, tagaarib*/ **1a** test, experiment. *taḥt it-tagriba* (1) undergoing trials. (2) on a trial basis. ‖ *ʕit-tagriba xayru burhaan* ≈ the proof of the pudding is in the eating. **1b** *[Chr]* trial, temptation. **2** experience.
اتجرّب *ʕitgarrab* or *ʕiggarrab* /vi/ passive of *garrab*. - iva *mitgarrab*.

ج ر ب [2]
جرب *girib (a)* /vi/ **1** to become mangy. **2** to become shabby or mangy-looking. *ʃakl-u garbaan* his appearance is disgusting. **3** to become faded or washed-out (of colour). - vn *garab, garabaan*; ava *garbaan*.
جرب *garab* /n/ scabies, mange.
جربان *garbaan* /adj */ **1** *[path]* mangy. **2** shabby, disgusting in appearance. **3** faded, drab (of colour).
جربة *garba* /n pl *-aat*/ mange, itch.
جربة *garaba* /adj invar/ like a sore, disgusting. *ʕinta*

been ʃixwaan-ak garaba you are a disgrace to your friends! *ʃibʕid ʕan in-naas ig-garaba dool* stay away from these revolting people!

أجرب *ʃagrab* /adj, fem *garba*, pl *gurb*/ **1** mangy. **2** faded, drab (of colour).

جرّب *garrab*[2] /vi/ to become mangy. - ava *migarrab*.

اجرّب *ʃigrabb* /vi/ **1** to become mangy. **2** to become faded or washed-out (of colours). - ava *migribb*.

ج ر ب[3]

جراب *giraab* /n pl *giríba, girabaat*/ **1a** sheath, scabbard. **1b** holster. **2** small bag or pouch (usually of leather). ‖*ħaṭṭ*[i] *raas-u fig-giraab* he was rendered harmless (like a snake in a conjurer's bag). - *yaama fig-giraab ya ħaawi [prov]* (how much you have in your bag, conjurer!) ≈ the world is full of surprises. **3** flap of a *ʂiwaan* (q.v.).

ج ر ب[4] see ج ر و ب: *guruub*

ج ر ب ّ

جروبّي *gurubbi* /prop n/ **1** Groppi's, a well-known coffee-house and restaurant company with two branches in downtown Cairo. **2** /coll n/ (Groppi) ice cream(s).

ج ر ب ب -

جريبفروت *giribbifruut, giribfiruut* <Engl> /coll n/ grapefruit(s). - also *giriffiruut*.

جريبّ *giribb* = *giribbifruut*.

ج ر ب ع

جربوع *garbuuʕ, garbuuʕ* /n pl *garabiiʕ, garabiiʕ*/ **1** desert rat, jerboa. **2** *[abus]* low despicable vagabond, trashy good-for-nothing.

جربعة *garbaʕa* /n/ loafing, vagabondage, bumming around. *baṭṭal garbaʕa fiʃ-ʃawaariʕ* stop roving about the streets!

مجربع *migarbaʕ, migarbaʕ* /adj */ *[abus]* low and despicable.

اتجربع *ʔitgarbaʕ* or *ʔiggarbaʕ* /vi/ to become a vagabond. *ʔil-waad itgarbaʕ min yoom ma maat ʔabuu* the lad became a complete good-for-nothing when his father died. - vn *tigarbiiʕ*; iva *mitgarbaʕ*.

ج ر ب ك س

جيربوكس *girbuks, garabuks* <Engl> /n pl *-aat*/ gear-box.

ج ر ب ن د

جربندية *garabandiyya* <P *châr-bandî*> /n pl *-aat*/ **1** knapsack. **2** game-bag.

ج ر ث م see ج ر س م

ج ر ج ت ت

جورجيت *jurjitt* (also *kiribb*[i] *jurjitt*) <Fr> /n/ georgette, a matt crepe of sheer silk or rayon.

ج ر ج ر[1]

جرجر *gargar* /vt/ to drag, pull, draw. *gargar-ni lil-ʔism* he dragged me to the police station. *bi-ygargar-na lil-ʔasʔila ʂ-ʂaʕba* he draws us on to the difficult questions. - vn *gargara*; ava/pva *migargar*.

مجرجر *migargar* /n pl *-aat/ [obsol]* long trailing overgarment worn by women of the lower classes on dressy occasions.

جرجار *girgaar* /adj */ troublesome, provoking quarrels or schisms.

اتجرجر *ʔitgargar* or *ʔiggargar* /vi/ to be dragged, be pulled. *mitgargar fil-maħaakim* dragged through the courts. - iva *mitgargar*.

ج ر ج ر[2] see ج ر ج ى ر: *gargiir*

ج ر ج س

جرجس *girgis* /prop n/ male given name. *maari girgis* St. George.

ج ر ج و د

جرجودة *garguuda* /n/ variety of date.

ج ر ج ى ر

جرجير *gargiir* /n/ rocket (Eruca sativa). *gargiir ʔarḍi* winter cress (Barbarea praecox).

ج ر ح

جرح *garaħ, garaħ (a)* /vt/ **1** to wound, injure. *garaħ ʃuʕuur-i* he hurt my feelings. *garaħti ʕalb-i* you broke my heart. *ʔafki l-miin wi-kull in-naas magariiħ [prov]* to whom can I complain when everyone is suffering? **2** /imperf only/ to behave in such a way as to make incursions on the privacy of (s.o.) *ʕeeb - ma-tigraħ-ʃ il-giraan* shame on you! don't invade the neighbours' privacy! - vn *garħ*; ava *gaariħ*; pva *magruuħ*.

جرح *garħ, garħ* /n pl *guruuħ, giraaħ*/ wound, injury. *garħ*[i] *ʁaayir* a deep wound. *yinħaṭṭ*[a] *ʕal-garħ*[i] *yṭiib* or *yiffi g-giraaħ* ≈ (something or someone) with a soothing or pleasant effect.

جارح *gaariħ*↑ /adj/ carnivorous.

جارحة *garħa, gaariħa*↑ /n pl *gawaariħ*/ **1** *[zool]* carni-

vore. *ʔiṣ-ṣuquur wi-klaab iṣ-ṣeed min il-gawaariḥ* hawks and hounds are carnivores. **2** /pl only/ members of the (human) body. *b-aḥibb-ak bi-kull' gawarḥ-i* **1** love you with my whole being.

جراحة *giraaḥa* /n/ surgery. *ʔalaat giraaḥa* surgical instruments.

جراحى *giraaḥi* /adj/ surgical. *ʕamaliyya giraḥiyya* a surgical operation.

جرّاح *garraaḥ* /n */ surgeon.

اتجرح *ʔitgaraḥ* or *ʔiggaraḥ* /vi/ to be wounded, be injured. - iva *mitgiriḥ*.

انجرح *ʔingaraḥ* or *ʔingaraḥ* = *ʔitgaraḥ*. - iva *mingiriḥ*.

جرح *garraḥ* /vt/ **1** to scratch. *ʔir-raml' bi-ygarraḥ il-ʔizaaz* sand scratches glass. **2** to injure extensively. *garraḥ wiff-u* he left his face badly cut about. **3** to abuse, slander, defame. *giran-ha yaama garraḥu sumʕit-ha* how her neighbours blackened her reputation! *sitt' mgarraḥa* a notorious woman. - vn *tagriiḥ*; ava/pva *migarraḥ*.

اتجرّح *ʔitgarraḥ* or *ʔiggarraḥ* /vi/ **1** to be scratched. **2** to sustain extensive injuries. **3** to be slandered, be defamed. - iva *mitgarraḥ*.

ج ر د

جرد *garad, garad (u)* /vt/ **1** to scrape clean. *kawaariʕ magruuda bil-kaẓlak* trotters scraped clean with the boning knife. *ʔugrudi s-siggaada* sweep the carpet with a hard brush. **2** to take an inventory of. *garad il-maxzan* he took an inventory of the store. - vn *gard, gard*; ava *gaarid*; pva *magruud*.

جرد *gard* /n/ inventory, stocktaking. *daftar gard* inventory record book.

أجرد *ʔagrad* /adj pl *gurd*/ beardless.

جراد *garaad* /coll n/ locust(s). ‖*garaad il-baḥr* crayfish.

جرادة *garaada* /unit n, pl *-aat*/ a locust.

جارود *garuud* /n/ scraper, scraping tool.

جريد *giriid* /coll n/ palm stalk(s), commonly used, when stripped of leaves, for weaving crates for the storage of vegetables, etc. *ʕaṣiir giriid* juice extracted from young palm branches for use as a base for *hubhub* (q.v.).

جريدة *giriida, gariida* /n pl *garaayid, garaayid, giridaat*/ **1** /unit n/ a palm branch. **2** a newspaper. ‖*da kalaam garaayid* ≈ that's just chatter. **3** either of the two bones in the forearm. **4** decorative seam-binding running the length of a sleeve (of a galabiya or *ʕabaaya*).

أجرود *ʔagruud* /adj pl *ʔagariid*/ beardless.

أجرودى *ʔagruudi* = *ʔagruud*.

اتجرد *ʔitgarad* or *ʔiggarad* /vi/ **1** to be scraped. **2** to be inventoried. - iva *mitgirid*.

انجرد *ʔingarad* = *ʔitgarad*. - iva *mingirid*.

جرّد *garrad* /vt/ **1** to scrape. *kaanu bi-ygarradu ṭ-ṭiin min if-faariʕ bi-kull' ṣʕuuba* they were scraping the mud from the street with great difficulty. **2** to strip, divest, relieve. *garradu ẓ-ẓaabiṭ* they stripped the officer of his rank. *garradu l-ʔassiis* they defrocked the priest. *ʔil-ḥaramiyya garradu l-beet mın kull" ḥaaga* the thieves stripped the house bare. *ʔil-buliis misku l-ḥaramiyya w-garradduu-hum min silaḥ-hum* the police caught the thieves and disarmed them. *garraduu min kull illi ḥilt-u* they robbed him of all his belongings. **3** *[mil]* to dispatch (troops). - vn *tagriid*; ava/pva *migarrad*.

تجريدى *tagriidi*↑ /adj/ abstract (of art).

التجريديّة *ʔil-tagridiyya*↑ /n/ abstractionism, abstract art.

مجرّد *mugarrad* /adj */ **1** bare, stripped. *bil-ʕeen il-mugarrada* with the naked eye. *bani ʔaadam mugarrad min il-ʔaxlaaq* a man totally without manners. **2** abstract. *ʔakl' mugarrad* abstract form. **3** *[gram]* simple. *ʔil-fiʕl il-mugarrad* the simple verb. - /adv/ **4** merely. *di mugarrad taṣawwuraat* these are no more than mere fantasies. *mugarrad ʔinni ʔatkallim titnarviz* I only have to speak and you lose your temper!

¶ *bi-mugarrad* /prep/ at the very moment of, as in *bi-mugarrad bad*ʔ *it-taẓhiir* at the very start of blossoming. - *bi-mugarrad ma* /conj/ as soon as.

انجرّد *ʔitgarrad* or *iggarrad* /vi/ to be stripped, be divested. - vn *tagarrud*↑, *tagarrud*↑; iva *mitgarrad*.

ج ر د ا ن

جردان *gardaan* /n pl *garadiin*/ standard-size barrel

ج ر د ل

جردل *gardal* <T *gerdel*> /n pl *garaadil*/ **1** bucket, pail. ‖*ʔawaqqaʕ-u zayy ıg-gardal* ≈ I'll take the sucker for all he's got! **2** dolt, sucker.

ج ر د ن

جاردن سيتى *gardin siti* /prop n/ Garden City, an upper-class district of Cairo adjoining the Nile.

ج ر ذ see ج ر ز [1]

ج ر ر

جرّ *garr' (u)* /vt/ **1** to pull, drag. *ʕarabiyya ygurr-a-ha ḥuṣaan* a cart pulled by a horse. ‖*bi-ygurr' rigl-u* (1) he limps. (2) he leads him on, he leads him up the garden

path. - *ʃik-kalaam bi-ygurr' baʕḍ-u* one subject of conversation leads to another. - *ʃil-ʃalif tigurr il-bih* ≈ one thing leads to another. - *garr-u fil-kalaam* he led him on. *garr' mʕaa kalaam* he entered into conversation with him. - *garrit diḥka* she gave a drawn out (provocative) laugh. - *garr' ʃakal* provocation, picking a quarrel, as in *ʕaṣd-ak hizaar walla garr' ʃakal* are you just joking or are you trying to provoke (me)? - *garr' naaʕim maʕa* see *naaʕim*. **2** to buy (goods, especially groceries) on credit. - vn *garr, gararaan*; ava *gaarir*; pva *magruur*.

جرّ *garr*[2] /vn/ ‖*ḥarf' garr [gram]* preposition.

¶ *garra: wi-halumma garra* and so forth.

مجرور *magruur* /n pl *magariir*/ **1** lavatory unit. **2** *[rur]* cesspit.

جرّة *garra* /n/ **1** /pl *-aat*/ instance noun of *garr*. *ʃiddii-ni garra min sigart-ak* give me a drag of your cigarette. ‖*garrit ʕalam* a (mere) stroke of the pen, as in *bi-garrit ʕalam ʃawaddii-k is-sign* I could send you to prison with a stroke of the pen. **2** /pl *giraar, gurar*/ earthenware jar, pitcher (see Pl.A, 10). ‖*kaan fi-garra w-xarag li-barra [prov]* (he was in a jar and came out) ≈ he has risen in the world. - *miʃ kull' marra tislam ig-garra [prov]* ≈ don't rely on always being so lucky.

جرّة *gurra* /n pl *-aat*/ spoor, trail, track. ‖*ma-ḥadd'-ʃ ʕarif-lu gurra* or *ʃid-dibbaan il-ʃazraʕ ma-yiʕraf-ʃ' gurrit-u* ≈ no one has seen hide or hair of him.

جرّ *girr* /interj/ shoo! (to a dog). *ʃimʃi girr' min hina* get out! go away!

جرّار *garraar* /n pl *-aat*/ **1a** any of a range of engines and devices for dragging or pulling (such as a tractor, locomotive, tugboat, carriage-return mechanism of a typewriter, harness trace). **1b** trailer. *luuri b-garraar* trailer-truck **2a** dumb waiter, service lift. **2b** (also *sufragi garraar*) bus-boy. **3** (also *baab garraar*) sliding door. **4** pair of flat slippers.

جرّارة *garraara* /n pl *-aat*/ trailer.

جرايِر *garaayir* /pl n/ wake, consequences, follow-up (of something bad). *ʃiḥna lissa f-garayir-ha* we're still suffering from the consequences. *kull illi ḥaṣal da kaan min garayr-ak* all that happened was because of you.

اجرّ *ʃitgarr* or *ʃiggarr* /vi/ passive of *garr*. ‖ *ʃitgarr' min hina* buzz off! - *ʃiṣ-ṣanf' da ma-yitgarr'-ʃ kitiir* this line of merchandise is not much in demand. - iva *mitgarr*.

انجرّ *ʃingarr* = *ʃitgarr*. - iva *mingarr*.

انجرارة *ʃingiraara* /n pl *-aat*/ debt owed for goods acquired on credit. *miʃ mumkin taaxud gidiid ʃilla lamma txallaṣ ingiraarit if-fahr illi faat* you cannot start new credit until you have paid off what you owe from last month.

اجرّ *ʃigtarr*[1] /vt/ **1** *[zool]* to chew (the cud), ruminate (food). **2** to ponder over (especially sorrows). *maḍḍit il-leel sahraana tigtarr' hmum-ha* she spent a sleepless night mulling over her troubles. - vn *ʃigtiraar*; ava *migtarr, mugtarr*. see further under [3] ش ر ر

استجرّ *ʃistigarr*↓ /vt/ to draw (e.g., money, goods) in stages or on credit. *yaama ʠult-i-lu baṯṯal tistigarr' bʠalt-ak minnu fukuk* how often I've told him not to keep taking his groceries on credit. - vn *ʃistigraar*; ava *mistigarr*.

استجرارة *ʃistigraara*↓ /n pl *-aat*/ debt owed for goods acquired on credit.

[1] ج ر ز

جرذ، جرز *girz* /n pl *girzaan*/ large rat.

[2] ج ر ز see [2] ج ر س : *garaz*

[1] ج ر س

جرسة *gursa, girsa* /n pl *guras, giras*/ public disgrace, scandal.

جرسي *gurasi* /n pl *-yya*/ scandalmonger.

جرّس *garras* /vt/ to shame publicly, bring scandal upon. *garrast-i-na fil-ḥitta kull-a-ha bi-zʕiiʠ-ak* you've made us a scandal throughout the neighbourhood with your shouting! - vn *tagriis*; ava/pva *migarras*.

اجرّس *ʃitgarras* or *ʃiggarras* /vi/ to be shamed publicly, be made the subject of scandal. - iva *mitgarras*.

[2] (ج ر س)

جرس *jirs* <Engl> /n/ jersey, sweater. - also *firz*.

جرس *garas* (also *garaz*) /n pl *ʃagraas, garasaat*/ bell. ‖*tiʕbaan ʃabu garas* rattlesnake.

ج ر س م

جرومة *gursuuma, garsuuma* /n pl *garasiim*/ germ, microbe. *baṣṣit-li min fooʠ li-taḥt' tʠul-ʃ' gursuuma* she looked me up and down as if I were a germ.

ج ر س ن –

جرسونييرة *garsunyeera* <Fr *garçonnière*> /n pl *-aat*/ accommodation acquired by a man for the purposes of clandestine affairs with women.

ج ر س و ن

جرسون *garsoon* <Fr *garçon*> /n/ **1** /pl *-aat*/ waiter. **2** (also *ʕala garsoon*) /no pl/ gamin hairstyle (for women).

ج ر س ی

جرسيه *jirseeh* <Fr> /n/ **1** jersey (knitted fabric). **2** pullover.

ج ر ش [1]

جرش *garaf (u)* **1** /vt/ to crush, grind coarsely (e.g., legumes). *bi-yugruf il-fuul ʕafaan yiʕmil ṭaʕmiyya* he crushes the broad beans to make *ṭaʕmiyya*. *bunn' magruuf* coarsely ground coffee. *talg' magruuf* crushed ice. **2** to grate, crunch. *ʔir-raml' b-yugruf ʕala l-balaaṭ* the sand crunches on the tiles (when one walks on it). *ʔasnaan-u b-tugruf wi-huwwa naayim* he's grinding his teeth in his sleep. - vn *garf, garafaan*; ava *gaarif*; pva *magruuf*.

اتجرش *ʔitgaraf* or *ʔiggaraf* /vi/ to be crushed, be ground coarsely. - iva *mitgirif*.

انجرش *ʔingaraf* = *ʔitgaraf*. - iva *mingirif*.

ج ر ش [2]

جراش، جراج *garaaf* (also *garaaj*) <prob Fr> /n pl -*aat*/ garage.

جرّش *garraf* **1** /vt/ to park (a vehicle, not necessarily in a garage). *garraf il-ʕarabiyya gamb ir-raṣiif* park the car by the kerb. **2** /vi/ to be parked (of a vehicle). *ʔil-luuri garraf fil-ḥoof il-ʕurayyib* the lorry parked in the yard nearby. - vn *tagriif*; ava/pva *migarraf*.

اتجرّش *ʔitgarraf* or *ʔiggarraf* /vi/ to be parked (of a vehicle). - iva *mitgarraf*.

ج ر ع

جرع *garaʕˀ (a)* /vt/ to drink, pour (a drink, especially medicine) down the throat. *garaʕ id-dawa bil-ʕafya* he could hardly gulp the medicine down.

جرعة *gurʕa* /n pl -*aat, guraʕ*/ mouthful, draught, gulp, dose (of, e.g., water, medicine). *xud talat gurʕaat min id-dawa yawmiyyan* take three doses of medicine daily.

جرّع *garraʕ* /vt/ to make (s.o.) swallow, force (s.o.) to drink. *garraʕuu is-simm* they forced poison down his throat. ‖*yaama garraʕ-ni z-zaman min kaas-u* ≈ how much have I been forced to drink from the cup of suffering! - vn *tagriiʕ*; ava/pva *migarraʕ*.

اتجرّع *ʔitgarraʕ* or *ʔiggarraʕ* /vt/ to be made to swallow, force oneself or be forced to take (e.g., medicine, maltreatment). - vn *tagarruʕˀ*; ava/iva *mitgarraʕ*.

ج ر ف

جرف *garaf (u)* /vt/ **1** to carry along, carry away (of a current). **2** to shovel, scoop, sweep up. - vn *garf, garafaan*; ava *gaarif*; pva *magruuf*.

جارف *gaarifˀ* /adj/ sweeping, irresistible (of a current). ‖*ḥubb' gaarif* overwhelming love.

جرف *garf* /n pl *guruuf*/ **1** clod of earth. *wiqiʕ ʕalee garf' min foɔq il-ḥeeṭa* a lump of dirt fell on his head from off the wall. **2** oaf, dôlt.

جاروف *garuuf* /n pl *gawariif*/ **1** small spade or shovel. **2** dustpan. **3** wooden threshing shovel. **4** scoop (for sugar, rice etc.).

جرّافة *garraafa* /n pl -*aat*/ mechanical shovel.

مجرفة *magrafa* /n pl *magaarif*/ hoe-shaped iron for raking ash from an oven or hearth.

اتجرف *ʔitgaraf* or *ʔiggaraf* /vi/ to be carried along by a current (of water, air, opinion etc.). - iva *mitgirif*.

انجرف *ʔingaraf* = *ʔitgaraf*. - iva *mingirif*.

جرّف *garraf* /vt/ to rake out (e.g., ash). - vn *tagriif*; ava/pva *migarraf*.

اتجرّف *ʔitgarraf* or *ʔiggarraf* /vi/ to be raked out. - iva *mitgarraf*.

ج ر ف ت ت

جرافتّة *garafatta* <It *cravatta*> /n pl -*aat*/ tie, cravat. - also *karafatta*.

ج ر ف -

جريفّروت *giriffiruut* <Engl> /n/ grapefruit. - also *giribb, giribbifruut, giribfiruut*.

ج ر ف ي ت

جرفيت *garafiit, girafiit* <Fr> /n/ graphite.

ج ر ك

جهاركاه *girka* <T *çargâh* from P> /n/ *[mus]* **1** name given to the note F natural. **2** mode in Arabic music having F natural, B flat and E half flat.

ج ر م [1]

جرم *gurm* /n/ criminal behaviour, criminality.

جريمة *gariima* /n pl *garaayim*/ crime. *ʔeeh ig-gariima lli ʕamalnaa-ha* what crime did we commit?

جرّم *garram* /vt/ to make (s.th.) illegal. *ʔil-ḥukuuma garramit it-tadxiin fis-sinima* the government made smoking in the cinema illegal. - vn *tagriim*; ava *migarram*.

اتجرّم *ʔitgarram* or *ʔiggarram* /vi/ to be made illegal. - iva *mitgarram*.

أجرم *ʔagram* /vi/ to behave ruthlessly. *ʔagramt' f-ḥaqq-i* you have trampled on my rights. - vn *ʔigraam*; ava *mugrim*.

إجرامي *ʔigraamiˀ* /adj/ criminal. *ʔaʕmaal ʔigramiyya* criminal acts.

مجرم *mugrim* **1** /n * and pl *magarma*/ criminal. **2** /adj */ **2a** ruthless. **2b** naughty. (of a child). see further under م ج ر م

استجرم *ʔistagram* **1** /vt/ to consider criminal. *kull-i-na stagramnaa f-ḍarb-u lik-kalb* we all thought him a bully for beating the dog. *ʔin-naas istagramit ʕamlit-u s-*

sooda people condemned his dreadful behaviour. **2** /vi/ to behave, or enjoy behaving, in a criminal fashion. *ʃeeh fuʏl il-istigraam da* what's this high-handed behaviour! - vn *ʃistigraam*; ava/pva *mistagram*.

ج ر م [2]
جرمة *gurma* /n/ huge quantity, large number. *ɛandu gurmit ɛiyaal* he has a horde of children.
جرم *girim* /adj */ sturdy, robust, large of stature.
جرومية *gurumiyya* /n/ bulkiness (especially of a human body). *ʃamma faxṣ[i] girim gurumiyya* what a mountain of a man!
جرامة *garaama = gurumiyya*.
اجرمّ *ʃigramm* /vi/ to become large in structure (of living things). *ʃif-fagara grammit* the tree grew thick and tall. - ava *migrimm*.

ج ر م ق
جرمق *garmaq* /n/ huge mob. *ɛanduhum garmaq ɛiyaal* they have a whole tribe of children.

ج ر ن
جرن *gurn* /n pl *ʃagraan, giraan*/ **1a** threshing floor, threshing area. **1b** open space in a village (where people sit, chat etc.). **2** wooden mortar. **3** *[Chr]* (baptismal) font.
جرّن *garran* /vt/ to place (e.g., wheat) in a *gurn*. - vn *tagriin*; ava/pva *migarran*.
اتجرّن *ʃitgarran* or *ʃiggarran* /vi/ to be placed in a *gurn*. - iva *mitgarran*.

ج ر ن ا ل
جرنال، جرنان *gurnaal* or *gurnaal*, (also *gurnaan↓*, *gurnaan↓*) <Fr *journal*> /n pl *garaniil, garaniin*/ newspaper.

ج ر ن ا ن see ج ر ن ا ل

ج ر ن ت ت see ج ر ن ى ت: *garanitta*

ج ر ن ى
جرونيا *garunya* <prob It *geranio*> /n/ variety of geranium (Pelargonium zonale).

(ج ر ن ى ت)
جرنيت *garaniit, giraniit* <Fr> /n/ granite.
جرانيتة *garaniita* (also *garanitta*) <It *granita*> /n/ semi-frozen syrup, sorbet (usually lemon-flavoured).

ج ر و ب
جروب *guruub* <Engl> /n pl *gurubaat, gurubbaat*/ group.

ج ر و ل
جرول *garwil* /vt/ to brush with a broom or one's hand (large pieces of, e.g., broken sugar, stones) from the surface of a pile of s.th. smaller. - also *galwil, galwin*. - vn *garwala*; ava/pva *migarwil*.
اتجرول *ʃitgarwil* or *ʃiggarwil* /vi/ passive of *garwil*. - also *ʃitgalwil, ʃitgalwin*. - iva *mitgarwil*.

ج ر و ه
جيروه *jiruuh* <It *giro*> /n pl *-aat*/ armhole (in a garment).

ج ر ى [1]
جرى *giri (i)* /vi/ **1** to run. *giryit ɛalee w-ḥaḍanit-u* she ran to him and embraced him. **2** to speed (away). *ʃis-samaka giryit* the fish darted off. *saaɛit ma nadahna lit-taks[i] giri* as soon as we called the taxi, it speeded away. **3** to flow. *ʃil-mayya b-tigri lil-baḥr* the water flows to the sea. *ḥubb-a-ha b-yigri f-damm-u* ≈ he is deeply in love with her. *ʃid-dumuuɛ giryit fi-ɛnee lamma ʃaf-ha* the tears sprang to his eyes when he saw her. ‖*riiq-i giri* my mouth watered. - *ʃil-filuus bi-tigri f-ʃiid-u* ≈ he's well-off. - *ḥisaab gaari [bank]* current account. - vn *gary, garayaan*; ava *gaari*.
¶ *giri ɛala* to labour for the sake of, work to provide for. *bi-nigri ɛala ɛeʃ-na* we work for our living. *di sitt[i] maskiina b-tigri ɛala ʃarbaɛ ɛiyaal* she's a poor woman struggling to keep four children.
جرى *gara (a)* /vi/ to happen, occur. *tistahli lli yigraa-lik* you deserve what you get. *ʃana xaayif yikuun gara-lha ḥaaga* I'm afraid something may have happened to her. *gara l-ɛaqḷ-ak ʃeeh* have you gone mad? *miin ɛaarif kaan raaḥ yigra ʃeeh* who knows what would have happened? *ḥ-aqabl-u wi-lli yigra yigra* I'll meet him come what may! *ya reet illi gara ma kaan* would that it had never happened! ‖*ma-yigraa-ʃ ḥaaga* ≈ it's O.K! it doesn't matter!
جرية *garya[1]* /inst n, pl *-aat*/ run. *garya musriɛa* a fast run.
جارية *garya[2]* /n pl *gawaari/ [obsol]* female slave, concubine. *ʃuṭbuxi ya garya. - kallif ya siid-i [prov]* ≈ he who calls the tune must pay the piper. *sitt[i] w-garyiteen ɛala ɢaly[i] beḍteen [prov]* ≈ a sledge hammer to crack a nut.
جراية *giraaya* /n pl *-aat*/ (also *ɛeef giraaya*) daily bread-

ration (used in prisons, the army, and (formerly) at el-Azhar).

مجرى *migra* /n pl *-aat*/ groove. *fii migra kida l-ɛagala b-timfi fiiha* there is a groove along which the wheel runs.

مجرى *magra* /n pl *magaari*/ **1** course. *magra ḥayaat-i* the course of my life. **2a** groove, slot. **2b** channel, conduit. *magra l-ɛuyuun* the fourteenth-century aqueduct situated in south-east Cairo. ‖*rigɛit il-mayya l-magarii-ha* ≈ life returned to its normal course. — *ʕil-magaari* /pl n/ **3** the sewers, the sewage system.

جرّى *garra* /vt/ **1** to cause to run. *laazim tigarrii kull' yoom* you must exercise him every day. **2** to cause to flow. *ḥaaga tgarri r-riiq* something which makes the mouth water. **3** to clear of obstructions (in order to make a flow possible). *garri l-masuura di* clear this pipe. - vn *tagriyya*; ava/pva *migarri*.

جارى *gaara*[1] /vt/ **1** to keep pace with, conform to, comply with. *laazim il-waaḥid yigaari l-mooḍa* one should keep up with the fashions. *ʕana mif ɋaadir ʕagarii-k fi-kalaam-ak* I cannot go along with what you say. **2** to humour, indulge. *gaari l-mudiir li-ḥadd' ma taaxud il-ɛilaawa* humour the director till you get the rise. - vn *migariyya*; ava *migaari*.

أجرى *ʕagra↑*, *ʕagra↑* /vt/ to set in motion, effect, carry out. *ḥa-nigri l-ʕiḥṣaʕiyyaat il-lazma* we'll make the necessary statistical runs. - vn *ʕigraaʕ*; ava *migri, mugri*; pva *mugra*.

إجراء *ʕigraaʕ↑* /n pl *-aat*/ measure, procedure, step. *da mugarrad ʕigraaʕ rasmi* that is merely a formal measure. *ʕigraʕaat qanuniyya* legal proceedings.

إجرائى *ʕigraaʕi↑* /adj */ procedural. *nuɋṭa ʕigraʕiyya* a procedural point.

ج ر ى[2] see ج ر ء[1]: *ʕistagra*

ج ر ى ج

جريجى *giriigi* <Engl> **1** /adj/ Greek. **2** /n pl *girigiyyiin, giriig*/ a Greek.

ج ز ء[1]

جزء *guzʕ* /n pl *ʕagzaaʕ*/ **1** part, piece. *ʕagzaaʕ il-makana* the machine parts. **2** any of the thirty sections into which the Koran is divided. see further under ج ز ء[1]

جزئى *guzʕi↑* /adj */ partial. *ʕiɛtiraaf guzʕi* partial recognition. ‖*ʕil-maḥkama l-guzʕiyya* court of summary justice.

جزىء *guzeeʕ, guzayʕ↑* /n pl *-aat*/ molecule.

جزيئى *guzeeʕi* /adj/ molecular.

جزّأ *gazzaʕ* /vt/ to section, split up. *tagziiʕ iz-zarra* splitting the atom. - vn *tagziʕa, tagziiʕ*; ava/pva *migazzaʕ*.

تجزئة *tagziʕa* /n/ sectioning, subdividing. ‖*tuggaar tagziʕa* retail merchants.

اتجزّأ *ʕitgazzaʕ↑* or *ʕiggazzaʕ↑* /vi/ to be sectioned, be split up. - vn *tagazzuʕ*; iva *mitgazzaʕ*.

ج ز ء[2] see ج ز ى[1]: *gazaaʕ*

ج ز ب

جذب *gazab (i)* /vt/ **1** to attract. *bi-yigzib iz-zabaayin* it attracts customers. **2↑** to pull. *gazabt-u min ʕiid-u* I pulled him by the hand. - vn *gazb*; ava *gaazib*; pva *magzuub*.

جاذبيّة *gaazibiyya↑* /n/ attraction, attractiveness, pull. *ʕil-gaazibiyya l-ginsiyya* sexual attraction. ‖*qanuun ig-gaazibiyya* the law of gravity.

مجذوب *magzuub* /adj pl *magaziib*/ possessed, insane (applied in particular to dervishes).

جذّاب *gazzaab* /adj */ attractive, charming.

انجذب *ʕitgazab* or *ʕiggazab* /vi/ **1** to be attracted. **2** to be pulled. **3** to act as if possessed (particularly in contexts of religious ecstasy). - ava/iva *mitgizib*.

انجذب *ʕingazab* = *ʕitgazab*. - vn *ʕingizaab*; iva *mingizib*.

ج ز ر[1]

جزر *gazar*[1] /coll n/ carrot(s).

جزره *gazara* /unit n, pl *-aat*/ a carrot. ‖*gazarit ḥariiq* fire-cock, fire-hydrant. - *maḥbas gazara* stop-cock.

جزراية *gazaraaya* = *gazara*.

ج ز ر[2]

جزيرة *gizira* /n pl *gazaayir*/ **1** island. ‖*ʕig-giziira* /prop n/ Guezira, the larger of the two islands in the Nile at Cairo. **2** traffic island.

الجزائر *ʕil-gazaayir* /prop n/ **1** Algeria. **2** (*madinit*) *il-gazaayir* Algiers.

جزايرى *gazayri* **1** /adj invar/ term applied to anything planted near the banks of a river, or on islands in a river. **2** /adj */ Algerian. **3** /n */ an Algerian.

ج ز ر[3]

جزر *gazar*[2] *(u)* /vt/ to deal harshly with (in money matters). *gazar-ni fis-siɛr* he charged me a murderous price. *beeɛa gazr* a terrible deal. - vn *gazr, gazr*; ava *gaazir*; pva *magzuur*.

جزارة *gizaara* /n/ **1** occupation or practice of butcher-

ing. **2** /pl *-aat*/ butcher's shop.
جزّار *gazzaar* /n */ butcher.
مجزرة *magzara* /n pl *magaazir*/ massacre.
اتجزر *ʃitgazar* or *ʃiggazar* /vi/ to be dealt with harshly (over money). -iva *mitgizir*.
انجزر *ʃingazar* = *ʃitgazar*. -iva *mingizir*.

ج ز ر [4]
جزر *gazr* /n/ ebb. *madd[i] w-gazr* tide, flow and ebb.

ج ز ر [5] see ج د ر [4]: *gazr, gizr[1]*

ج ز ز [1]
جزّ *gazz[1] (i)* /vt/ to shear, clip. *gazz[i] ʃaɛr-u* he cut his hair very short. ‖*gazz[i] raqabit-ha* he cut off her head. -vn *gazz, gazazaan*; ava *gaaziz*; pva *magzuuz*.
جزّة *gazza* /n pl *-aat*/ **1** /inst n/ a shearing, a clipping. **2** shorn fleece.
جزّة *gizza* /n pl *-aat, gizaz*/ shorn fleece.
اتجزّ *ʃitgazz* or *ʃiggazz* /vi/ to be sheared, be clipped. -iva *mitgazz*.
انجزّ *ʃingazz* = *ʃitgazz*. -iva *mingazz*.

ج ز ز [2]
جزّ *gazz[2] (i)* /vi/ to bite hard. *gazz[a] ɛala ṣbaaɛ-i* he bit down on my finger. *gazz[a] ɛala snaan-u* he clenched his teeth. -also *kazz*. -vn *gazz, gazazaan*; ava *gaaziz*.

ج ز ز [3] see ج ز و ز: *gazuuza*

ج ز ع [1]
جزع *gazaɛ[1] (a)* /vt/ to sprain. *ʃiid-i magzuuɛa* my wrist is sprained. -vn *gazɛ, gazaɛaan*; ava *gaaziɛ*; pva *magzuuɛ*.
جزعة *gazɛa* /n pl *-aat*/ a sprain.
اتجزع *ʃitgazaɛ* or *ʃiggazaɛ* /vi/ to be sprained. -iva *mitgiziɛ*.
انجزع *ʃingazaɛ* = *ʃitgazaɛ*. -iva *mingiziɛ*.

ج ز ع [2]
جزع *gazaɛ[2] (a)* **1** /vt/: *gazaɛ in-nifs* to cause to feel sick, nauseate. *ʃil-ʃakl[i] gazaɛ nifs-i* the food made me feel sick. **2** /vi/: *ʃin-nifs[i] gazaɛit* to feel sick, be nauseated. *nifs-u gazaɛit lamma ʃamm ir-riiḥa l-wiḥʃa* he felt sick when he smelled the stench. -vn *gazaɛ, gazaɛaan*; ava *gaaziɛ*; pva *magzuuɛ*.
جزعانة *gazɛaana* /fem adj/ nauseated. *nifs-i gazɛaana* I feel sick.
جزّع *gazzaɛ[1]* /vt/ to cause to feel sick, nauseate. *ṭaɛm[i] ygazzaɛ in-nifs* a sickening taste. -vn *tagziiɛ*; ava *migazzaɛ*.
اتجزّع *ʃitgazzaɛ[1]* or *ʃiggazzaɛ[1]* /vi/ to be made to feel sick, be nauseated. -iva *mitgazzaɛ*.

ج ز ع [3]
جزّع *gazzaɛ[2]* **1** /vt/ to marble, give a (synthetic) graining or veining effect to. **2** /vi/ to acquire a (synthetic) graining or veining effect. -vn *tagziiɛ*; ava/pva *migazzaɛ*.
اتجزّع *ʃitgazzaɛ[2]* or *ʃiggazzaɛ[2]* /vi/ to be marbled, acquire a (synthetic) graining or veining effect. -ava/iva *mitgazzaɛ*.

ج ز ع [4]
جذع *gizɛ* /n pl *guzuuɛ*/ **1** torso (of a human). **2** trunk (of a tree).

ج ز ف
جزافا *guzaafan* /adv/ haphazardly. *bi-yiṣrif fuluus-u guzaafan* he spends his money thoughtlessly.
جزافي *guzaafi* /adj/ haphazard, random. *ʃuɣl-u dayman guzaafi min ɣeer taxṭiiṭ* his work is always haphazard, without a proper plan. *taqdiir guzaafi* arbitrary estimation.
جازف *gaazif* /vi/ to take risks. -vn *migazfa*; ava *migaazif*.
مجازفة *migazfa, mugazfa* /n pl *-aat*/ risk.

ج ز ل
جزلة *gizla* /n pl *gizal, gizlaat*/ thick slice, steak (of meat or fish).
جزل *gizil* /adj */ thick. *ʃaɛr-a-ha gizil* she has thick hair.
جزّل *gazzil* **1** /vt/ to slice. *xud is-samaka di gazzil-ha* take this fish and cut it in slices. **2** /vi/ to become firm and thick (of flesh). *raqabit-ha mgazzila* she has a neck like an ox. -vn *tagziil*; ava *migazzil*.
اتجزّل *ʃitgazzzil* or *ʃiggazil* /vi/ sliced. -iva *mitgazzil*.

ج ز ل ا ن
جزلان *guzlaan↓* /pl *-aat*/ purse.

ج ز ل ي ن
جازولين *gazuliin* <prob Fr> /n/ petrol, gasoline.

ج ز م [1]
جزمة *gazma* <T *çizme*> /n pl *gizam, gazmaat*/ **1** pair of shoes. *gazma b-raqaba* pair of boots. ‖*muxx-u gazma* he's a dolt. -/often with an association of impurity and

degradation/ *ʃibn' gazma* ≈ low bastard. *da-bn' kalb' ɛaawiz iḍ-ḍarb' b-sittiin gazma* he is a son of a bitch and should be beaten with sixty shoes (i.e. should be given the most humiliating of punishments). *wala yhimm-ak fi-gazmit-ak* ≈ you shouldn't give a tinker's cuss. **2** footrest on a boot-black's stand or sewing machine.

جزمجي *gazmagi* /n pl *-yya*/ shoemaker, cobbler.

جزماتي *gizamaati* /n pl *-yya*/ shoemaker, cobbler.

ج ز م 2

جزم *gazam' (i)* /vi/ to decide, be decisive. *m-aqdar-ʃ agzim bi-raʃy' fil-ḥaala di* I can't give a definite opinion in this case. - vn *gazm*; ava *gaazim*.

جزم *gazm* /n/ **1** *[gram]* jussive mood, apocopate form. **2**: *kazlak gazm [butcher]* boning knife.

مجزوم *magzuum'* /n/ *[gram]* not followed by a vowel (of a consonant). *fiɛl' magzuum* a verb in the apocopate (jussive) form.

جزم *gazam²*: *habb' gazam* see *habb²*.

ج ز م 3

جذام *guzaam* /n/ leprosy.

مجذوم *magzuum²* /adj */ leprous.

ج ز ن see ج ز و ن : *gazuun*

ج ز و ر –

جازورين *gazwariin* /coll n/ evergreen tree(s) of the pine family (Casuarina stricta). - also *kazwariin*.

جازورينة *gazwariina* /pl *-aat*/ unit, noun of *gazwariin*. - also *kazwariina*.

ج ز و ز

جازوزة *gazuuza* <Gr *gazoza*> /n/ pop, carbonated soft drink. - also *ʃazuuza, kazuuza*.

ج ز و ن

جازون *gazuun* <Fr *gazon*> /n/ *[bot]* ray grass (Lolium perenne).

ج ز ى 1

جزى *gaza* /vt/ to reward. *gazaa-k allaah kull' xeer* or *rabb-i-na yigzii-k* may God reward you! - vn *gazaaʃ*; ava *gaazi*; pva *magzi*.

جزاء، جزا *giza, gazaaʃˀ* /n pl *-aat*/ punishment, penalty. *ḍarbit gazaaʃ [soccer]* penalty kick.

جزاة *gazaat* or *gizaat* /n, always in constr/ recompense, requital. *hiyya di gizaat-i* is this (all) the reward I get? *gazaat il-ʃiḥsaan ḍarb il-ʃiɋlaam [prov]* be charitable and your only reward is a beating. *gizaat-ak illi ma-smiɛt'-ʃ kalaam ʃabuu-k* that's what you get for not heeding your father's advice.

جازى *gaaza* /vt/ **1** to punish. *ʃil-mudarris gazaa b-ɛalɋa* the teacher punished him with a beating. *ʃallaah yigaazi lli kaan is-sabab* may God punish the one who caused all this! || *ʃalla ygaazi ʃtaan-ak* ≈ you little devil! **2** to requite (of God). - *ʃallaah yigaazii-k xeer* may God reward you! - vn *migaziyya*; ava *migaazi*.

اتجازى *ʃitgaaza* or *ʃiggaaza* /vi/ to be punished. - iva *mitgaazi*.

ج ز ى 2

جزية *gazya* /n pl *-aat*/ cross-beam supporting the framework of a *saɋya* (see Pl.E. 3).

ج س ت م –

جستمان *gustumaan* /n pl *-aat*/ *[naut]* bowsprit.

ج س د

جسد *gasad* /n pl *ʃagsaad*/ human body. *ʃit-tanaawul min gasad ir-rabb' w-damm-u [Chr]* the partaking of the body and blood of the Lord.

جسدى *gasadi* /adj/ bodily, physical. *ʃil-ʃamraaḍ ig-gasadiyya* bodily illnesses. *ḥubb' gasadi* carnal love.

جسّد *gassid* /vt/ to embody, incarnate, represent in concrete form. *ʃil-film' gassid muʃkilit is-sitt il-mitwaẓẓafa* the film illustrated the problem of the working woman. *bi-yɋuulu ʃinn if-ʃiṭaan bi-ygassid nafs-u ɛala fakl' baɛḍ il-ḥayawanaat* they say the devil manifests himself in the form of certain animals. - vn *tagsiid*; ava *migassid*.

اتجسّد *ʃitgassid* or *ʃiggassid* /vi/ to become corporeal, materialize, become incarnate. *kull il-faḍaayil itgassidit fii* all virtues were incarnate in him. - vn *tagassud*; ava *mitgassid*.

التجسّد *ʃit-tagassud* /n/ *[Chr]* the incarnation (of Christ).

ج س ر 1

جسر *gisr* /n pl *gusuur*/ embankment (on a waterway). *ɛala gisr it-tirɛa* on the canal bank. *raas gisr [mil]* bridgehead.

جسّر *gassar* /vi/ to make an embankment. *gassar ɛal-mayya* make a bank to enclose the water. - vn *tagsiir*; ava *migassar*.

اتجسّر *ʃitgassar* or *ʃiggassar* /vi/ (impersonal) passive of *gassar*. *laazim yitgassar ɛal-mayya* an embankment should be made round the water. - iva *mitgassar*.

ج س ر [2]
جسارة *gasaara, gasaara* /n/ audacity, courage, boldness.
جسور *gasuur* /adj */ courageous, audacious, bold.
اتجاسر *ʔitgaasir, ʔitgaasar* or *ʔiggaasir, ʔiggaasar* /vi/ to dare, venture, have the courage (to do s.th.). *tiqdar titgaasir tiquul kida f-wiff-u* do you dare say that to his face? - vn *tagaasur*; ava *mitgaasir*.

ج س س [1]
جسّ *gass (i)* /vt/ to test, examine, sample. *gass il-laḥma qabl' ma ṭallaʕ-ha min il-furn* he tested the meat (to see that it was done) before taking it out of the oven. *gass il-xuḍaar qabl' ma yiftirii* he examined the vegetables before he would buy them. *ʔid-duktoor gass' nabḍ-i* the doctor took my pulse. *gassu nabḍ in-naas* they sounded out the mood of the people. - vn *gass*; ava *gaasis*.
جسّة *gassa* /inst n, pl *-aat*/ a test, a sounding. *ʕamalu gassaat ʕafaan yifuufu nooʕ il-ʔasaas il-munaasib* they made tests (by drilling in the soil) to decide which was the right type of foundation.
جاسوس *gasuus* /n pl *gawasiis*/ spy.
جاسوسيّة *gasusiyya* /n/ espionage.
جسّاس *gassaas* /n */ **1** *[geol]* an expert in taking soundings (especially in search of oil or water). **2** *[rur] gassaas bahaayim* an expert in testing pregnant cattle to decide the age of the foetus.
مجسّ *migass* /n pl *-aat*/ **1** probe. **2** plumb-line.
انجسّ *ʔitgass* or *ʔiggass* /vi/ to be tested, be examined, be sampled. - iva *mitgass*.
انجسّ *ʔingass* = *ʔitgass*. - iva *mingass*.
اتجسّس *ʔitgassis* or *ʔiggassis* /vi/ to spy. *bi-yitgassisu ʕaleena b-ṭayyaraat* they spy on us with planes. - vn *tagassus*; ava *mitgassis*.
استجسّ *ʔistagass* /vt/ to spy out, pry into. *ruuḥ istigass il-xabar* go and make secret inquiries about the news. - ava *mistigass*.

ج س س [2] see ج ت ت : *gussa*

ج س م
جسم *gism* /n pl *ʔagsaam*/ body. *ʔil-ʕaql is-saliim fil-gism is-saliim* a sound mind resides in a sound body. *gism il-ʕarabiyya* the body of the car. *ʔagsaam ɣariiba↑* foreign bodies, foreign matter. ‖ *ʔitʕib gism-ak wala titʕib ʕalb-ak [prov]* tire yourself physically (by doing the job yourself) rather than mentally (by trying to get others to do it). *gism ig-gariima* material evidence of the crime.
جسمي *gismi* /adj/ bodily.
جسماني *gusmaani* /adj/ bodily, physical.
جسامة *gasaama* /n/ enormity, greatness. *kaanit il-xasaayir fi-ɣaayit il-gasaama* losses were absolutely immense.
جسيم *gasiim↑* /adj/ great, tremendous. *xaṭar gasiim* great danger. *maʃaakil gasiima* enormous problems.
أجسم *ʔagsam* /el/ more/most great or tremendous.
جسّم *gassim* /vt/ **1** to embody, give form to. *timsaal mugassam ʕar-raḥma* a statue representing mercy. **2** to give substance to, magnify. ‖ *ṣoot mugassam* stereophonic sound. *-ṣuura mugassama* three-dimensional picture. - vn *tagsiim*; ava *migassim*; pva *mugassam*.
اتجسّم *ʔitgassim* or *ʔiggassim* /vi/ **1** to take shape or form, materialize. *ʔil-fikra tgassimit fi-zihn-i* the idea formed in my mind. **2** to be given shape, be formed. - vn *tagassum*; ava/iva *mitgassim*.

ج ش ش
أجشّ *ʔagaʃʃ↑ : ṣoot ʔagaʃʃ* a husky voice.

ج ش ع
جشع *gaʃaʕ* /n/ greed.
جشع *gaʃiʕ↑, giʃiʕ* /adj */ greedy.
أجشع *ʔagʃaʕ* /el/ more/most greedy.

ج ش م [1]
جشّم *gaʃʃim↑* /vt/ to burden (s.o.). *ʔiʃ-fuɣlaana `di gaʃʃimit-ni mataaʕib kitiira* this business made me undergo many hardships. - vn *tagʃiim*; ava *migaʃʃim*.
اتجشّم *ʔitgaʃʃim* or *ʔiggaʃʃim* /vt/ to undergo (a hardship). *yaama tgaʃʃimt' maṣaaʕib ʕaʃaan xaṭr-ak* how many difficulties I suffered for your sake! - vn *tagaʃʃum*; ava *mitgaʃʃim*.

ج ش م [2]
جشمة *gaʃma* /n/ adjustment bolt (on a goldsmith's scale).

ج ش ى ه
جيشيه *gifeeh* <Fr *guichet*> /n pl *-aat*/ cashier's window.

ج ص ط ن
جصطن *gaṣṭan↓* /vi/ *[obsol]* to loll or recline in a grand fashion, sit or stretch out with a regal air. - vn *gaṣṭana*; ava *migaṣṭan*.
اتجصطن *ʔitgaṣṭan* or *ʔiggaṣṭan* = *gaṣṭan*. - ava *mitgaṣṭan*.

ج ض ب
جضب *gaḍb* /n/ *[bot]* bird's-foot trefoil.

ج ض ع
جضع *gaḍaʕ (a)* **1** /vt/ to stretch out, lay down. *gaḍaʕu l-magruuḥ ʕal-ʃarḍ* they laid the wounded man on the ground. **2** /vi/ to lie down. *gaḍaʕ ʕas-siriir* he stretched out on the bed. - vn *gaḍaʕaan, gaḍʕ*; ava *gaaḍiʕ*; pva *magḍuuʕ*.
اتجضع *ʃitgaḍaʕ* or *ʃiggaḍaʕ* /vi/ **1** to recline at one's ease, loll. **2** to be laid down. - ava/iva *mitgiḍiʕ*.
انجضع *ʃingaḍaʕ* = *ʃitgaḍaʕ*. - ava/iva *mingiḍiʕ*.

ج ع ج ع
جعجع *gaʕgaʕ* /vi/ to brag, be vocal, make empty boasts or threats. - vn *gaʕgaʕa*; ava *migaʕgaʕ*.
جعجاع *gaʕgaaʕ, giʕgaaʕ* /n/ boaster, loudmouth, braggart.

ج ع د [1]
جعّد *gaʕʕad* /vt/ **1** to wrinkle, crinkle. **2** to curl (hair). *faʕr' mgaʕʕad* curly hair. - vn *tagʕiid*; ava/pva *migaʕʕad*.
تجعيدة *tagʕiida* /n pl *tagaʕiid*/ wrinkle.
اتجعّد *ʃitgaʕʕad* or *ʃiggaʕʕad* /vi/ **1** to be wrinkled. **2** to be curled (of hair). - vn *tagaʕʕudʔ*; iva *mitgaʕʕad*.
تجعّد *tagaʕʕudʔ* /n pl *-aat*/ wrinkle.

ج ع د [2]
جعيدى *giʕeedi* /adj pl *-yya, gaʕayda*/ **1** pertaining to the Upper Egyptian tribe of the *gaʕayda*. — /n/ **2** *[obsol]* musician with drum or flute. **3** loafer, wastrel.

ج ع ر [1]
جعر *gaʕar (a)* /vi/ to make a loud unpleasant noise, bray, bellow (of a human being). *faakir ʃinnak ḥa-tlahii-ni b-giʕiir-ak* do you think you can distract me with your bellowing? - vn *giʕiir, gaʕr*; ava *gaaʕir*.
جعورة *gaʕuura* /n/ **1** /no pl/ loud unpleasant sound, bray, bellow. **2** /pl *-aat, gawaʕiir/ [slang]* mouth (as an organ producing unpleasant sounds). *ʃabụ gaʕuura* a loudmouth. *sidd ig-gaʕuura* shut your gob!
جعّيرة *guʕʕeera* = *gaʕuura*.
جعّر *gaʕʕar* = *gaʕar*. - vn *tagʕiir*; ava *migaʕʕar*.

ج ع ر [2]
جعران *guʕraan* /n pl *gaʕariin*/ scarab.

ج ع ر ر
جعّر *giʕirr* /n/ **1** disgusting-looking person, eyesore. **2** good-for-nothing, a nobody.

ج ع ر ن
جعرن *gaʕran* **1** /vt/ to cause to swell, inflate (a part of the body). *ʃiḍ-ḍarba gaʕranit ʂurt-u* the blow made his forehead swell. **2** /vi/ to be or become swollen, swell. *raas-u gaʕranit mil-xabṭa* his head swelled from the knock. - vn *gaʕrana*; ava/pva *migaʕran*.
مجعرن *migaʕran* /adj/ raucous (of a voice).

ج ع ص
جعصة *gaʕṣa* /n/ pompous posture. *ʂaʕad ʕak-kanaba magʕuuṣ ḥittit gaʕṣa* he lounged on the sofa giving himself such airs!
جعاصة *gaʕaaṣa* /n/ self-importance, pomposity.
جعيص *giʕiiṣ* /adj pl *guʕaṣa*/ self-important, pompous.
أجعص *ʔagʕaṣ* /el/ **1** more/most self-important or pompous. *wala yhimm-i-ni ʔagʕaṣ giʕiiṣ fiikum* the biggest bully among you doesn't scare me. **2** *[slang]* better/best.
جعّاصى *gaʕʕaaṣi* /adj invar/ enormous, huge. *ʕalee ḥittit gitta gaʕʕaaṣi b-fakl* what a formidable body he has!
مجعوص *magʕuuṣ* /adj */ sitting with an air of self-importance. *magʕuuṣ fil-ʕarabiyya w-bitt' zayy il-ʂifṭa ʂaʕda gambu* lounging in the car like a big-shot with a smashing girl next to him.
اتعص *ʃitgaʕaṣ* or *ʃiggaʕaṣ* /vi/ to recline or sit with an air of self-importance. - ava *mitgiʕiṣ*.
انجعص *ʃingaʕaṣ* = *ʃitgaʕaṣ*. - ava *mingiʕiṣ*.

ج ع ض ى ض
جعضيض *guʕḍeeḍ* /n/ *[bot]* sow-thistle (Sonchus oleraceus).

ج ع ف ر
جعفرى *gaʕfari* /n/ left-over food (in the jargon of waiters).

ج ع ل
جعل *gaʕal (a)* /vt/ **1** to set aside, earmark. *gaʕalt'-lu xamsiin ʂirf in laʂaa* I promised him fifty piastres if he found it. **2** to cause to be (usually of God). *ʃallahumma ʃigʕal-u xeer* may God make it turn out well! *ya rabb' ʃigʕal kalam-na xafiif ʕala ʂalb-u-hum* Lord, make our words acceptable to them! *ʃil-mayya magʕuula lif-furb* water is made for drinking. — /vi/ **3** to pretend. *gaʕalit ʃinnaha lli dafaʕit* she made out that it was she who paid. - ava *gaaʕil*; pva *magʕuul*.
اتجعل *ʃitgaʕal* or *ʃiggaʕal* /vi/ to be made. - iva *mitgiʕil*.

انجعل ʃingaɛal = ʃitgaɛal. -iva mingiɛil.

ج ع ل ص
جعلص gaɛlaṣ /vi/ to become fat, become podgy. ɛayyil-ha gaɛlaṣ min kutr il-ʃakl her child got (too) fat from over-eating. -vn gaɛlaṣa; ava migaɛlaṣ.
جعلص guɛluṣ /n/ [abus] fatty, fatso.
جعلوص gaɛluuṣ /adj pl gaɛaliiṣ/ fat, plump, podgy.
اتجعلص ʃitgaɛlaṣ or ʃiggaɛlaṣ = gaɛlaṣ.

ج ع م
جعم gaɛam (i) /vt/ 1 to force, stuff (s.th. especially food into s.o. or s.th.). gaɛam il-luqma f-buqq-u w-bil-ɛafya qidir yiblaɛ-ha he stuffed such a big bite of food into his mouth that he could hardly swallow it. 2 to compress, squeeze. gaɛamit buggit il-huduum taḥtⁱ baṭ-ha she held the bundle of clothes tight under her arm. -vn gaɛm; ava gaaɛim; pva magguum.
جعمة gaɛma /pl -aat/ instance noun of gaɛm.
اتجعم ʃitgaɛam or ʃiggaɛam /vi/ 1 to be compressed, be squeezed. 2 to be stuffed or stuff oneself (with food). ʃiggaɛamit mil-ʃakl she ate till she was fit to burst. -ava/iva mitgiɛim.

ج ع م ص
جعمص gaɛmaṣ /vi/ to sit with a pompous air. -vn gaɛmaṣa; ava migaɛmaṣ.
اتجعمص ʃitgaɛmaṣ or ʃiggaɛmaṣ /vi/ to behave haughtily, act with an air of self-importance. -ava mitgaɛmaṣ.

ج غ ر ف ى
جغرافية guɣrafya <It geografia> /n/ geography.
جغرافى guɣraafi /adj/ geographical.

ج غ غ
جغة giɣɣa /nonce word/ sound made in imitation of a baby either to play with a baby or to mock someone for behaving babyishly.

ج ف ت
جفت gift <T çift> /n pl gufuut/ 1 forceps, tweezers. 2 clamp. giftⁱ furyaani arterial clamp. -also fift.
جفتة gifta /n pl -aat/ lip inset (in sewing).

ج ف ر¹
جفر gafar /n/ camel pox.
جفّر gaffar /vi/ to show signs of camel pox, be afflicted with camel pox. -vn tagfiir; ava migaffar.

ج ف ر (²)
جفر gafr: ɛilm il-gafrˀ fortune-telling, through the study of the letters of a person's name in combination with astrology.
جفرة gafra: ḥafra gafra barren and uninhabited area of land, desolate place, area of ruins.

ج ف ر ت تِ
جوفريتِ gufritt <Fr gaufrette> /coll n/ wafer biscuit(s).
جوفريتة gufritta /unit n, pl -aat/ a wafer biscuit.
جوفريتاية gufrittaaya /unit n, pl -aat/ = gufritta.

ج ف ف
جفّ gaff¹ (i) /vi/ to dry, become dry. -vn gafafaan, gafaaf; ava gaff, gaaff, gaafif.
جافّ gaff², gaaff /adj/ dry. ʃaɛrⁱ gaff dry hair. baṭṭariyya gaffa dry-cell battery. ḥood gaff dry dock. ‖ qalam gaff ball-point pen. -raddⁱ gaff curt answer. -kalaam gaff rude talk.
أجفف ʃagfaf /el/ more/most dry.
أجفّ ʃagaff = ʃagfaf.
جفاف gafaaf /n/ 1 dryness. 2 [obsol] dry period in the winter when the Nile is low and irrigation activity ceases. 3ˀ drought.
جفّف gaffif /vt/ 1 to dry. gaffif dimuuɛ-ak dry your tears. 2 to desiccate. laban migaffif dried milk. -vn tagfiif; ava/pva migaffif; pva migaffafˀ.
اتجفّف ʃitgaffif or ʃiggaffif /vi/ to be dried. -iva mitgaffif.

ج ف ن
جفن gifn /n pl gufuun, ʃagfaan/ eyelid. ʃiltihaab il-gifn [path] conjunctivitis. ‖ naam malwⁱ gufuun-u he slept his fill, he had a good sleep.

ج ف و
جفا gafa¹ (a) /vt/ to shun, avoid (s.o.). ma-fii-ʃ ʃamarrⁱ min ḥabiib yigfaa-k nothing is more bitter than being rejected by one's sweetheart. ‖ ʃin-noom gafaa-ni sleep eluded me. -vn gafa; ava gaafi; pva magfi.
جفا، جفاء gafa² /n/ hardening of the emotions. ʃil-buɛdⁱ gafa [prov] remoteness hardens one's feelings. gafaa-k wala xluwwⁱ daar-ak [prov] not being on speaking terms with you is better than having you leave home altogether.
جافى gaafi /adj pl gafyiin, gufaah/ rough, harsh, hard (of temperament). naas gufaat iṭ-ṭabɛ crude people.
جفوة gafwa /n/ aversion, antipathy, estrangement. fii gafwa benhum they have a mutual aversion to one another.

جافا *gaafa* /vt/ to turn away from, shun. *ʕin-noom fi-bɛaad-ak yigafii-ni* sleep in your absence eludes me. *ʕilli ygafii-k gafii [prov]* (he who rejects you, reject him) give as good as you get. - vn *migafiyya*; ava *migaafi*.

اتجافى *ʕitgaafa* or *ʕiggaafa* /vi/ to shun one another. *fil-ʕawwil itgaafu w-dilwaqti tṣaafu* ≈ at first they were brusque with each other but now they are good friends. - vn *tagaafi*; ava *mitgaafi*.

ج ك ا ر

جاكار *jakaar* <prop n *Jacquard*> /n/ **1** jacquard weave, a process by which intricate designs are woven into a fabric. **2** jacquard loom. **3** jacquard, fabric produced on a jacquard loom.

ج ك ت ت

جاكتّة، جاكيتّة *jakitta* (also *zakitta*↓) <It *giacchetta*> /n pl *-aat*/ jacket, cardigan.

ج ك ر see ج ك ا ر : *jakaar*

ج ل ا

جلا *gala*[1]*: gala gala* **1** /interj/ cry of conjurers when performing tricks ≈ hey presto! **2** /coll n/ conjurers, magicians.

ج ل ا ت ى

جيلاتى *jilaati* <It *gelato*> /n/ ice cream.

ج ل ب [1]

جلب *galab*[1] *(i)* /vt/ to attract, stimulate, bring about. *ʕil-ḥigaab da yiglib il-maḥabba* this amulet wins love. *yaama galabit lina maṣaayib* how many catastrophes she's brought on us! - vn *galb, galabaan*; ava *gaalib*; pva *magluub*.

جلبه *galba* /n pl *-aat*/ uncouth person. *ʕeeh il-galba s-sooda dı lli gibt-a-ha mɛaak* what a dreadful lout you've brought with you!

جلبه *gilba* /n pl *gilab, gilbaat*/ **1** *[mech]* bush, bushing. **2** ferrule. – /adj invar and pl *gilab*/ **3** glib (of a person).

جلب *galab*[2] /adj invar/ **1** unbroken (of a horse). **2** uncouth, rough (of a person).

جلبه *galaba*↑ /n/ uproar, clamour. *fii galaba ʃdiida fiʃ-ʃaariɛ bi-sabab il-muruur* the traffic is causing a tremendous noise in the street.

جلّاب *gallaab* **1** /n */ stimulator, bringer about. *gallaab maṣaayib* causer of disaster. ‖*gallaab il-yasiir* the one who set free the captive and brought him home (epithet of el-Sayyid el-Badawi). **2** /adj */ attractive, winning.

اتجلب *ʕitgalab* or *ʕiggalab* /vi/ to be brought, be brought about. - iva *mitgilib*.

انجلب *ʕingalab* = *ʕitgalab*. - vn *ʕingilaab*; iva *mingilib*.

استجلب *ʕistaglib* /vt/ to gain, win, procure, obtain. *ḥasab ʕaɛmal-ku ḥa-tistaglibu maḥabbit in-naas ʕaw karahiyyit-hum* you will earn people's love or their hatred according to your actions. - vn *ʕistiglaab*; ava *mistaglib*.

ج ل ب [2]

جلابيّة *gallabiyya* (also *galabiyya*) /n pl *galaliib*/ galabiya, full-length loose gown (the traditional dress of Egyptian men and women). *gallabiyya baladi* man's gown with wide sleeves and a plain neck opening, worn over a *sideeri* (q.v.) (see Pl.F, 5). *gallabiyya frangi* man's gown with cuffs, collar and a buttoned neck opening. *gallabiyya b-wisṭ*↓ woman's waisted dress. *gallabiyya samra* woman's black galabiya worn over indoor clothes when outside the house (see Pl.F, 11).

ج ل ب [3] see ج ل ل ا ب : *gullaab*

ج ل ب ا ن

جلبان *gulbaan* /n/ variety of vetch (Lathyrus satirus).

ج ل ب ن –

جلبنيز *gilibineez* /n/ string wrapping around pipes for guarding against chipping.

ج ل ب ه –

جلبهار *gulbahaar* <T *gülbahar* from P> /n/ a kind of backgammon.

ج ل ت see ج ل ا ت ى : *jilaati*

ج ل ت ر ب

جلتراب *gilitrab* <Engl *gully-trap*> /n pl *-aat*/ *[plumb]* trap in the gully or central drain of a building.

ج ل ت ى ن [1]

جيلوتين *gilutiin* <Fr> /n/ (paper-cutting) guillotine.

ج ل ت ى ن [2]

جلتين *jilatiin* <Engl> /n/ gelatine.

جلاتين *galatiin* /coll n/ gelatinous sweet(s) cut into cubes.

جلاتينة *galatiina* /unit n, pl *-aat*/ a piece of *galatiin*.

جيلاتينة *jilatiina* <It *gelatina*> /n/ **1** gelatine. **2** *[theat]* gelatine slide.

جيلاتينايا *galatinaaya* /unit n, pl *-aat*/ = *galatiina*.

ج ل ج ل
جلجل *galgil* /vi/ to resound, reverberate. *ʂot-ha galgil fil-beet* her voice rang through the house. *ʃir-raʕd[i] galgil* the thunder rumbled. - vn *galgala*; ava *migalgil*.
جلجل *gilgil* (also *gingil*) /n pl *galaagil*/ jingle bell. *fiqiiḥa b-galaagil* a scandal with bells on, a sensational scandal.

ج ل ج ن -
جلجنايت *gilignaayit* <Engl> /n/ gelignite.

ج ل ح
جلحى *galḥa* /fem adj/ bald. *raas-u galḥa* he is bald-headed.

ج ل ح ف
مجلحف *migalḥaf* /adj */ **1** rough-skinned. **2** oafish.

ج ل خ
جلخ *galx* /n/ **1** (also *ḥagar galx*) grindstone, whetstone. **2** encrusted grease or dirt. — /adj invar/ **3** uncouth, boorish, uncivil.
جلخة *galxa* /n pl *-aat*/ grindstone, whetstone.
جلاّخة *gallaaxa* /n pl *-aat*/ grindstone, whetstone.
جلّخ *gallax* /vt/ **1a** to grind. *tagliix ʕadasaat* lens grinding. **1b** to sharpen, whet. *raaḥ yigallax is-sikkiina* he went to sharpen the knife. **2** to smear or encrust with dirt or grease. — /vi/ **3** to become dull and stupid (especially of the brain). *muxx-i gallax* ≈ I can hardly think clearly. **4** to become dirty or greasy. *kull[i] gittit-u wi-hduum-u gallaxu mil-ʕaraq wil-wasaaxa* all his body and clothes were covered with sweat and dirt. - vn *tagliix*; ava/pva *migallax*.
اتجلّخ *ʃitgallax* or *ʃiggallax* /vi/ to be sharpened, be whetted. - iva *mitgallax*.

ج ل د [1]
جلد *galad[1] (i)* /vt/ to whip, flog. *ḥ-aglid-ha quddaam in-naas kull-u-hum* I'll flog her in front of everybody. - vn *gald*; ava *gaalid*; pva *magluud*.
جلدة *galda* /unit n, pl *-aat, gulad*/ stripe, lash. *galaduu rubʕumiit galda* they gave him four hundred lashes.
جلد *gild* /n pl *guluud*/ **1** skin, hide, leather. *gild il-xaruuf* sheepskin. *gild-u xifin* its skin is rough. *ḥuqna taḥt il-gild* subcutaneous injection. *gild[a] ʕala ʕaḍm* skin and bone. ‖ *gild[i] ḥurr* genuine leather. - *gild[i] lammiiʕ* patent leather. - *gild[i] ʃamrikaani* cowhide. - *maat fi-gild-u* he was scared stiff. - *nafad* (or *xiliṣ*) *bi-gild-u* he escaped with his life. - *ʕidim il-gild wis-saqaṭ* ≈ he lost everything. - *gild[i] nimr* garden mimulus. **2** outer membrane (of a plant), bark (of a tree). **3** brake-block (of a bicycle). *gooz gild bil-ḥadiid* a pair of brake-blocks in their shoes.
جلدة *gilda* /n/ **1** /unit n, pl *-aat*/ **1a** piece of skin, hide, leather or rubber. ‖ *ʕala l-gilda* on one's uppers, broke. **1b** strop. **2** /pl *-aat, gilad*/ **2a** binding (of a book). **2b** jacket, cover (of a book). **2c** *[plumb]* (tap) washer. — /adj invar/ **3** miserly.
جلدى *gildi* /adj */ **1** pertaining to the skin. *ʃamraaq gildiyya* skin diseases. **2** made of leather.
جلداية *gildaaya* /n pl *-aat*/ a piece of skin, hide, leather or rubber.
جلاّد *gallaad* /n */ **1a** flogger. **1b** executioner. **2** dealer in hides. **3**: *waraq gallaad* paper used for book-jackets.
اتجلد *ʃitgalad* or *ʃiggalad* /vi/ to be whipped, be flogged. - iva *mitgilid*.
انجلد *ʃingalad* = *ʃitgalad*. - iva *mingilid*.
جلّد *gallid* **1** /vt/ to put a cover on, bind (a book). *fii talamza tḥibb[i] tgallid kararis-ha waraq ʃaḥmar* some school children like to cover their copybooks with red paper. *ʃarxaṣ-lak tiftiri ktaab qadiim wi-tgallid-u* it'd be cheaper for you to buy a second-hand book and have it bound. **2** /vi/ to become leathery. *ʃil-ʕeef gallid* the bread went as hard as leather. - vn *tagliid*; ava/pva *migallid*.
مجلّد *migallid* /n */ book-binder.
مجلّداتى *migallidaati* /n pl *-yya*/ book-binder.
اتجلّد *ʃitgallid[1]* or *ʃiggallid[1]* /vi/ to be covered, be bound (of books). - iva *mitgallid*.

ج ل د [2]
جلد *galad[2]↑* /n/ stamina, endurance. *nifs-u yiftaval bass[i] ma-ʕanduu-ʃ galad* he has the desire to work but not the stamina.
جلد *gilid* /adj pl *gulaad*/ long-suffering, steadfast.
جلادة *galaada* /n/ stamina, endurance.
اتجلّد *ʃitgallid[2]* or *ʃiggallid[2]* /vi/ to endure, suffer, bear (pain, hardship etc.). - vn *tagallud↑*; ava *mitgallid*.

ج ل ز
جلّز *galliz* <Engl> /vt/ to glaze (pottery). - vn *tagliiz*; ava/pva *migalliz*.
اتجلّز *ʃitgalliz* or *ʃiggalliz* /vi/ to be glazed (of pottery). - iva *mitgalliz*.

ج ل س
جلس *galas↑ (i)* /vi/ to sit down. *galasu yitbaḥsu* they sat down to have a discussion. ‖ *ʃiid-u galsa↓* he has a

steady hand (e.g., in shooting). - vn *guluus*↑, *galasaan*; ava *gaalis*.

جلوس *guluus* /vn/ || *ʕoodit guluus* sitting room. - *raqam guluus* seat number (in an examination). - *ɛiid il-guluus (il-malaki)* anniversary of the coronation.

جالس *gaalis*[1] /adj/ thick, viscous (of fluids).

جلسة *galsa* /n pl *-aat, gilas*/ **1a** session, sitting. *ʕil-qaadi ʕaggil il-galsa* the judge postponed the hearing. || *galsit kahraba* one session of electric shock treatment. - *qumaaf gilas* material used for the top covering of chairs, sofas etc. **1b** seance. **2** window-sill. **3** *[euphem]* lavatory seat.

جليس *galiis* /n pl *gulasa, gullas*/ companion. *galiis il-muluuk [obsol]* companion of kings ≈ a man of consequence.

مجلس *maglis* /n pl *magaalis*/ board, council. *raʕiis il-maglis* chairman of the board. *maglis qarawi* village council. *maglis il-wuzara* the Cabinet. *maglis ɛaskari* court martial. || *ɛamal maglis [euphem]* to go to the lavatory.

جالس *gaalis*[2] /vt/ to attend the councils of. *ʕibn-i baqa kaatib kibiir wi-baqa ygaalis il-ʕakaabir* my son has become a big writer and hob-nobs with the great. - vn *migalsa*; ava *migaalis*.

اتجالس *ʕitgaalis* or *ʕiggaalis* /vi/ **1** to keep company, have social intercourse (with s.o.). *dayman yiḥibb' yitgaalis maɛaana* he always likes to be in our company. **2** (impersonal) passive of *gaalis*. *raagil la yitgaalis wala yitxaaṭib* a man one wouldn't wish to keep company with or (even) speak to. - ava/iva *mitgaalis*.

ج ل س ر -

جلسرين *gilisriin* <prob Fr> /n/ glycerine.

ج ل ش see ج ل ل ا ش : *gullaaf*

ج ل ص see ج ل و ص : *galuuṣ*

ج ل ط [1]

جلط *galaṭ (u)* /vt/ **1** to graze, scrape, abrade. *galaṭt' ʕiid-i* I scraped the skin off my hand. **2** to rub off, scrape off. *ma-tuɤluṭ-ʃ il-buuya min ɛal-baab* don't rub the paint off the door! - vn *galṭ*; ava *gaaliṭ*; pva *magluuṭ*.

جلطة *galṭa*[1] /n pl *-aat*/ **1** /inst n/ a scraping. **2** raw place, scrape.

اتجلط *ʕitgalaṭ* or *ʕiggalaṭ* /vi/ to be scraped raw. - iva *mitgiliṭ*.

انجلط *ʕingalaṭ* = *ʕitgalaṭ*. - iva *mingiliṭ*.

جلّط *gallaṭ* /vt/ **1** to scrape, rub off (a surface layer of s.th.). *gallaṭit il-ɛagiin min ʕidee-ha* she scraped the dough off her hands. **2** to smear (s.th. with s.th.). *gallaṭ il-garḥ' bil-marḥam* he smeared the wound with ointment. - vn *tagliiṭ*; ava/pva *migallaṭ*. see further under ج ل ى ط

اتجلّط *ʕitgallaṭ*[1] or *ʕiggallaṭ*[1] /vi/ to be scraped or rubbed off extensively or repeatedly. - iva *mitgallaṭ*.

ج ل ط [2]

جلطة *galṭa*[2] /n pl *-aat*/ **1** (blood) clot. **2** thrombosis. *galṭa fil-qalb* coronary thrombosis.

اتجلّط *ʕitgallaṭ*[2] or *ʕiggallaṭ*[2] /vi/ *[path]* to clot, coagulate (of blood). - vn *tagalluṭ*; ava *mitgallaṭ*.

ج ل ف [1]

جلف *galaf*[1] *(i)* /vt/ to draw, pull (into wire or filaments). - vn *galf*; ava *gaalif*; pva *magluuf*.

جلف *galf* /n/ machine for drawing wire.

اتجلف *ʕitgalaf*[1] or *ʕiggalaf*[1] /vi/ passive of *galaf*. - iva *mitgilif*.

ج ل ف [2]

جلف *galaf*[2] *(i)* /vi/ to scrape, scrape (the top) off. *galaf ʕiid-u* he grazed his hand. *galaft il-qifra min ɛag-garḥ* you rubbed the scab off the wound. - vn *galafaan*; ava *gaalif*; pva *magluuf*.

جلف *gilf* /adj pl *ʕaglaaf*/ crude, low-class, uncouth, vulgar (of people).

أجلف *ʕaglaf* /el/ more/most crude, low-class etc.

جلافه *galaafa* /n/ vulgarity, crudeness (in behaviour or speech). *tiḥiss' bil-galaafa fi-taṣarrufaat-u w-fi-kalaam-u* you feel how uncouth his behaviour and speech are.

انجلف *ʕitgalaf*[2] or *ʕiggalaf*[2] /vi/ to be scraped, be scraped off. - iva *mitgilif*.

استجلف *ʕistaglif* **1** /vt/ to select for vulgarity or crudeness. *raaḥ istaglif-lu waḥda w-baɛat-ha tixdim ʕumm-u* he picked a low-class woman and sent her to be his mother's servant. **2** /vi/ to act in a vulgar or uncouth way. *baṭṭal tisatglif fi-kalaam-ak* stop talking like a lout! - vn *ʕistiglaaf*; ava *mistaglif*.

ج ل ف ن

جلفنة *galfana* <prop n *Galvani*> /n/ galvanizing.

جلفن *galfin* /vt/ to galvanize. - vn *galfana*; ava/pva *migalfin*.

جلفانو *galfaanu* /n/ galvanometry.

جلفانى *galfaani* /adj */ galvanic.

اتجلفن *ʕitgalfin* or *ʕiggalfin* /vi/ to be galvanized. - iva *mitgalfin*.

ج ل ك و ز
جلوكوز *gulukooz* <prob Fr> /n/ glucose.

ج ل ل [1]
جلّ *gall (i)* **1** /vt/ to respect, honour. *ʕana ʕagill-u li-llaah fi-li-llaah* I respect him unfeignedly. — /vi/ **2** / only in perf/ to be or become great or sublime (usually of God). *ʕallaah ɛazz[i] w-gall* or *ʕallaah gall[i] galaal-u* God, Mighty and Glorious is He. ‖*gamaal gall il-xaaliq* beauty that makes one praise the Creator. - *gall il-mulk* to a great extent, in great numbers, in great sizes, etc., as in *bint[i] ḥilwa gall il-mulk* an extremely pretty girl (as befitting God's creation), *ɛaalam gall il-mulk* an enormous crowd (such as is only possible in God's kingdom). **3**↑ to be too great, be too difficult (for s.th.). *ḥadsa tgill[a] ɛan il-waṣf* an incident that defies description. - vn *galaal, galaala*.
جلال *galaal* /n/ grandeur, sublimity, awesomeness. *galaal il-manẓar* the grandeur of the scene. *wi-ḥaqq[i] galaal illaah* by God's sublimity! (a strong oath).
جلالة *galaala* /n/ sublimity, loftiness. *galalt-ak* your Majesty. *ṣaḥbit il-galaala* Her Majesty. *galaalit il-malik* His Majesty the King. ‖*bi-galalt-u* or *bi-galaalit qadr-u [iron]* ≈ the high and mighty, the great, as in *sii manṣuur bi-galalt-u* the mighty Mr Mansur.
جليل *galiil* **1** /n/ Glorious, Most Sublime (epithet of God). **2** /adj pl *ʕagilla*/ honourable, venerable. *ʕil-ɛuḍw il-galiil* the honourable member.
أجلّ *ʕagall*↑ /vt/ to respect, honour. - vn *ʕiglaal*; ava *mugill*.

ج ل ل [2]
جلّة *gilla* /n/ **1** dung (of animals). **2** dung mixed with straw, dried and used for fuel.
جلّالة *gallaala* /n/ **1** woman dung-gatherer. **2** /coll n/ chickens left to scavenge from dung heaps.
جلّل *gallil[1]* /vt and vi/ to defecate (of cattle). - vn *tagliil*; ava *migallil*.
اتجلّل *ʕitgallil[1]* or *ʕiggallil[1]* /vi/ to be defecated (by cattle). - iva *mitgallil*.

ج ل ل [3]
جلال *gilaal* /n pl *-aat*/ **1** camel-saddle blanket made of goat wool. **2** winter blanket made of sacking for an animal.
جلّل *gallil[2]*↑ *(i)* /vt/ to cover, drape. *gallilit ṣuurit ibn-a-ha l-mayyit bis-sawaad* she draped her dead son's picture with a dark cloth (as a sign of mourning). - vn *tagliil*; ava/pva *migallil*.
اتجلّل *ʕitgallil[2]* or *ʕiggallil[2]* to be covered or draped (especially with black cloth as a sign of mourning). - iva *mitgallil*.

ج ل ل [4]
جلّة *gulla* /n pl *-aat*/ *[athl]* shot.
مجلّة *magalla* /n pl *-aat*/ magazine, journal, periodical.

ج ل ل اب
جلاب *gullaab* <P *gulâb*> /n/ rose-flavoured syrup. ‖*sukkar gullaab* sugar sedimented in molasses, often moulded into candies.

ج ل ل اش
جلاش *gullaaʃ* <P *gulâj*> /n/ **1** sheets of thin pastry. **2** dish, either sweet or savoury, made of layers of this pastry.

ج ل م ب
جلمبو *galambu: ʕabu galambu* /n invar/ **1** crab, crabs. **2** *[slang]* **2a** ugly person, ugly people. **2b** policeman, policemen, fuzz.

ج ل ن د
جلند *galand* <Engl> /n pl *-aat*/ *[mech]* gland, lantern ring.

ج ل ن ف
جلنف *galanf, galamf* /n pl *-aat*/ oaf, boor, clod.

ج ل و ص
جالوص *galuuṣ* /n pl *gawaliiṣ*/ lump of mud.

ج ل و ل
جلول *galwil* /vt/ to brush with a broom or one's hand (large pieces of, e.g., broken sugar, stones) from the surface of a pile of s.th. smaller. *galwil il-ḥaṣa da mir-ruzz* pick that grit out of the rice. - also *garwil, galwin*. - vn *galwala*; ava/pva *migalwil*.
انجلول *ʕitgalwil* or *ʕiggalwil* /vi/ passive of *galwil*. - also *ʕitgarwil, ʕitgalwin*. - iva *mitgalwil*.

ج ل و ن [1]
جلون *galwin* /vt/ to brush with a broom or one's hand (large pieces of, e.g., broken sugar, stones) from the surface of a pile of s.th. smaller. - also *garwil, galwil*. - vn *galwana*; ava/pva *migalwin*.
انجلون *ʕitgalwin* or *ʕiggalwin* /vi/ passive of *galwin*. -also *ʕitgarwil, ʕitgalwil*. -iva *mitgalwin*.

[2] (ج ل و ن)
جالون *galoon*[1] <Fr *galon*> /n/ **1** /no pl/ galloon, braid. **2** /pl *-aat*/ trimming of galloon.
جالون *galoon*[2] or *galuun* <Fr *gallon*> /n pl *-aat*/ **1** gallon. **2** one-gallon can.

ج ل و ى ن
جلاوين *galaween* /n/ **1** thistle-like plant (Sonchus loeraceus). **2** dung (of cattle).

[1] ج ل ى
جلى *gala*[2] *(i)* /vt/ **1** to polish, burnish (e.g., metal). **2** to exibit (a bride adorned in her finery before the bridal procession). *leelit il-galwa* wedding night. **3** to cause to be eloquent. *ʔif-furb' b-yigli l-waaḥid* drinking makes one eloquent. - vn *galy, gila, galwa*; ava *gaali*; pva *magli*.
جلا *gila* /n/ polish.
جلية *ġalya* /inst n, pl *-aat*/ a polish, a polishing.
جلاء، جلّا *galla*[1] /n pl *gallayiin*/ one who polishes metal, marble, floor tiles etc.
انجلى *ʔingala* /vi/ **1** to be polished or burnished (of metal etc.). **2** to become eloquent. *ʔingaleet fil-ḥadiis* I sparkled in the conversation. **3**↑ to be or become manifested or revealed, manifest or reveal oneself. *ʔil-ḥaqiiqa ngalit* the truth came to light. **4**↑ to result (in s.th.). *ʔingalat il-maʕraka ʕan qatileen* the battle ended with two people dead. - ava/iva *mingili*.
اتجلى *ʔitgala* or *ʔiggala* = *ʔingala*. - ava/iva *mitgili*.
جلّى *galla*[2] /vt/ **1** to clarify, explain. **2** to polish. **3** plate with metal. - vn *tagliyya*; ava/pva *migalli*.
اتجلّى *ʔitgalla* or *ʔiggalla* /vi/ **1a** to be or become revealed or manifest. *rabb-i-na yitgalla ʕaleena b-raḥmit-u* may God show us His mercy! *ʔil-ʕadra tgallit lin-naas fiz-zatuun* the Virgin Mary appeared to people in Zaytoun. **1b** *[Chr]* to be transfigured. **2** to be polished. **3** to be plated with metal. - vn *tagalli*; ava/iva *mitgalli*.
التجلّى *ʔit-tagalli* /n/ *[Chr]* the transfiguration (of Christ).
متجلّى *mutagalli*↑ /n/ One who manifests Himself (epithet of God). *ya mutagalli ʕala ʕabiid-ak ya rabb* O God who hast manifested Thyself to Thy servants. *ya rabb' ya mutagalli ʔihlik il-ʕusmalli* (cry of the masses in Cairo against the Ottoman rulers) God! who art manifest in Thy deeds, destroy the Ottoman!
استجلى *ʔistagla* /vt/ to seek an explanation of, discover, clarify. *laazim nistagli sirr il-mawqif* we should discover the essential element in the situation. - vn *ʔistigla, ʔistiglaa*ʔ↑; ava *mistagli*.

[2] ج ل ى
جلى *gala*[3] *(i)* **1** /vt/ to oust, dislodge. **2** /vi/ to depart, evacuate. - vn *gala, galaa*ʔ; ava *gaali*; pva *magli*.
جلاء *galaa*ʔ /n/ evacuation. *ʕiid ig-galaa*ʔ Evacuation Day (in commemoration of the British evacuation from Egypt on 18th June 1954). *kubri g-galaa*ʔ Evacuation Bridge (between the southwest tip of Guezira and Guiza).
جالية *galya* /n pl *-aat*/ expatriate community.
جلّى *galla*[3] /vi/ to miss a target, miss a hit. - vn *tagliyya*; ava *migalli*.

[3] (ج ل ى)
جلى *jili* <Engl> /n/ (fruit) jelly dessert.
جالى *gali* <Engl> /n/ (ship's) galley.

ج ل ى ر د
جلياردة *galyarda* <prop n *Gaillard*> /n/ *[bot]* Gaillardia, blanket-flower.

ج ل ى ط
جليط *galyaṭ* /vt/ **1** to make greasy, make messy with grease. *ʔid-dihn' galyaṭ ṣawabʕ-ak* the fat made your fingers greasy. — /vi/ **2** to become greasy. **3** to behave rudely. *leeh tigalyaṭ maʕaa bif-fakl-i-da* why are you so impolite to him? - vn *galyaṭa*; ava/pva *migalyaṭ*.
جلياط *gilyaaṭ* /adj pl *galayṭa*/ vulgar, boorish.

[1] ج م ب
جمب *gamb*[1] <prob Engl *gum*> /n pl *-aat*/ gum-shield.

[2] ج م ب see ج ن ب: *gamb*[2], *gamba, gambiyya*

ج م ب ا ز
جمباز *gumbaaz* <P *jân-bâz*> /n/ gymnastics. *gumbaaz il-xeel* equestrian gymnastics.

ج م ب ر ى
جمبرى *gambari* <It *gamberi*> /coll n/ shrimp(s), prawn(s).
جمبرياية *gambariyaaya* /unit n, pl *gambariyaat*/ a shrimp, a prawn.

ج م ب ش
جمبش *gumbuʃ* <T *cümbüş*> /n/ *[mus]* type of steel-stringed instrument.

[1] ج م ج م
جمجمة *gumguma* /n pl *gamaagim*/ skull.

²ج م ج م
جمجم *gamgim* /vi/ to mutter. -vn *gamgama*; ava *migamgim*.

ج م ح
جمح *gamaḥ (a)* /vi/ to start forward, bound forward (of a horse). ‖*ṛaṿabaat gamḥa↑* unbridled passions. -vn *gumuuḥ*; ava *gaamiḥ*.

¹ج م د
جمد *gimid (a)* /vi/ **1** to become stiff or hard, congeal. *ʃil-mayya gimdit* the water froze. **2** to become strong. *ʃigmad* be strong! be resolute! *ɛaḍalaat-i gimdit* my muscles grew strong. **3** to become miserly. *ʃiid-u gimdit* he became tight-fisted. -vn *gumuud, gamadaan*; ava *gaamid*.
جامد *gaamid* /adj */ **1** stiff, hard, inflexible. *kawitf[i] gaamid* hard rubber. *rabaṭt-u rabṭa gamda* I tied it tightly. **2** strong, robust, vigorous. *ṣiḥḥa gamda* robust health. *ɛeela gamda* a powerful family. -*ɋalb-u gaamid* he is courageous. -*muxx-u gaamid* (1) he's intelligent. (2) he's inflexible. **3** miserly, mean. *naas gamdiin* tight-fisted people. **4** intense, extreme, existing in a high degree. *ɛalɋa gamda* a sound beating. *maṿaṣ gaamid* dreadful stomach-ache. *ḥumma gamda* a high fever. *ɋooʃ gaamid* intense light. -/adverbially/ *tiɋallibii-hum fi-baɛɋ[i] gaamid* you stir them together hard.
أجمد *ʃagmad* elative of *gaamid*.
جماد *gamaad[1]* /n/ inanimate matter. *ʃinta ma-bi-tḥiss[i]-ʃ - ʃinta gamaad* do you have no feelings, are you made of stone? ‖*ḥayawaan ʃaw nabaat ʃaw gamaad* animal, vegetable or mineral. -*da gamaad (ʃawwal)* he's tight-fisted (cf *gamaad[2]*).
جمودية *gumudiyya* /n/ **1** hardness, solidity. **2** meanness.
جمودي *gammuudi* /adj invar/ very miserly.
جمد *gammid* /vt/ **1** to make stiff or hard. **2** to strengthen. *gammid ɋalb-ak* take courage! **3** to change (an amount of small change) into units of larger denomination. *gammidt[i] talaata gneeh* I changed three pounds of coins (or low denomination notes) for pound notes. **4a** *[finan]* to freeze (bank loans or liquid assets). **4b** to fix (rents, prices etc.) usually by government order. *tagmiid il-ʃarṣida* freezing of funds. — /vi/ **5** to hold tightly. *gammid ɛal-kursi* hold tight to the chair! **6** to freeze, solidify. *ʃil-laban gammid* the milk froze solid. -vn *tagmiid*; ava/pva *migammid*.
اتجمّد *ʃitgammid* or *ʃiggammid* /vi/ **1** to become or be made hard or stiff. **2** to be collected, be accumulated (of money). *ʃitgammid liyya ɋirfeen ṭayyibiin fil-bank* ≈ I've saved a lot of money in the bank. *ʃitgaṃmidit ɛalee diyuun kitiira* his debts accumulated. -vn *tagammud↑*; ava/iva *mitgammid*.
استجمد *ʃistagmid* /vt/ to select for hardness. -ava *mistagmid*.

²ج م د
جمادى *gamaad[2]: gamaad (il-)ʃawwal* fifth month of the Muslim year. *gamaad (il-)ʃaaxar* or *gamaad it-taani* sixth month of the Muslim year. ‖*gamaad ʃawwal* very mean, miserly.

ج م د ا ن
جمدانة *gamadaana* <It *damigiana*> /n pl *-aat*/ carboy.

¹ج م ر
جمر *gamar (u)* /vt/ **1** to bury in live coals. **2** to cause much trouble or worry to (s.o.). *da gamar-ni b-faḍayḥ-u* he drove me to distraction with his scandalous behaviour. -vn *gamaraan*; ava *gaamir*; pva *magmuur*.
جمر *gamr[1]* /coll n/ ember(s), live coal(s).
جمرة *gamra[1]* /unit n, pl *-aat*/ an ember, a live coal. *da ṭifl[i] ṣṿayyar ma-yfarraɋ-ʃ[i] been it-tamra wil-gamra* (he's such a baby he can't tell the difference between a dried date and a burning coal) he is totally lacking in discernment. ‖ *ʃig-gamra l-xabiisa* anthrax.
جراية *gamraaya* /unit n, pl *-aat*/ a small piece of ember or live coal.
مجمرة *magmara* /n pl *-aat, magaamir*/ a hollow in the ground or a pot (made of clay or metal) to hold a live coal or the like. *ḥuṭṭ il-buxuur fil-magmara* put the incense in the censer.
اتجمر *ʃitgamar* or *ʃiggamar* /vi/ passive of *gamar*. -iva *mitgimir*.
انجمر *ʃingamar* = *ʃitgamar*. -iva *mingimir*.
جمّر *gammar[1]* /vt/ **1** to set on fire. *gammar il-faḥm* burn the coal till it blazes up. **2** to heat (bread). *gammar il-ɛeef* heat the bread over the fire. — /vi/ **3** to blaze. *ʃil-xaʃab il-maḥruuɋ gammar* the burning wood blazed up. -vn *tagmiir*; ava/pva *migammar*.
اتجمّر *ʃitgammar[1]* or *ʃiggammar[1]* /vi/ to be heated (of bread). -iva *mitgammar*.

²ج م ر
جمر *gamr[2]* /coll n/ pebble(s).
جمرة *gamra[2]* /n pl *-aat*/ **1** /unit n/ a pebble. **2** *[Isl]* **2a** / also pl *gamaraat*/ one of the three pillars at Mina at which pilgrims throw pebbles in the course of Meccan pilgrimage rites. **2b** /also pl *gimaar*/ a pebble used in the rite of stoning the pillars at Mina.

اتجمّر ʔitgammar[2] or ʔiggammar[2] /vi/ *[Isl]* to purify oneself from any traces of urine or excrement (where clean water is unavailable) by cleaning oneself with three clean and dry pieces of stone. - vn *tagammur*[1]; ava *mitgammar*.

استجمر ʔistagmar = ʔitgammar[2]. - vn ʔistigmaar; ava *mistagmar*.

ج م ر[3]

جمّار *gummaar* /coll n/ tender green shoot(s) at the top of sugar cane or palm trees.

جمّارة *gummaara* /pl *-aat*/ unit noun of *gummaar*.

جمّر *gammar*[2] **1** /vt/ to pollinate (especially palm trees). **2** /vi/ to produce tender green shoots (from the heart of the plant, of, e.g., palm trees, sugar cane, lettuce). *ʔil-ʔaṣab gammar* fresh shoots appeared at the top of the sugar cane. - vn *tagmiir*; ava/pva *migammar*.

اتجمّر ʔitgammar[3] or ʔiggammar[3] /vi/ to be pollinated (of a palm tree). - iva *mitgammar*.

ج م ر ك

جمرك *gumruk* <T *gümrük*> /n pl *gamaarik*/ **1** customs duty. **2** customs-house.

جمركي *gumruki* /adj */ pertaining to customs. *ʔit-taʕriifa g-gumrukiyya* customs tariff.

جمرك *gamrak (a)* /vt or vi/ to impose customs duty. *gamraku (ʕala) l-ʕarabiyya* they have charged customs duty on the car. - vn *gamraka*; ava/pva *migamrak*.

اتجمرك ʔitgamrak or ʔiggamrak /vi/ passive of *gamrak*. - iva *mitgamrak*.

ج م ز

جميز *gimmeez* /coll n/ **1** sycamore(s). **2** sycamore fig(s).

جميزة *gimmeeza* /unit n, pl *-aat, gamamiiz*/ **1** a sycamore. **2** a sycamore fig.

جميزاية *gimmezaaya* /unit n, pl *-aat*/ a sycamore fig.

جماميز *gamamiiz: darb il-gamamiiz* a populous district in east Cairo.

جمّز *gammiz* /vi/ to become pulpy (like sycamore fruit). - ava *migammiz*.

ج م س[1]

جيمس *jims* <prop n *James [Dean]*> /n pl *-aat*/ *[obsol]* modish young man, after the manner of James Dean).

اتجمسن ʔitjamsin or ʔijjamsin /vi/ *[obsol]* to be modish (of a young man, after the manner of James Dean). - ava *mitjamsin*.

ج م ش ت

جمشت *gamaʃt* <P *gamasт*> /n/ amethyst.

ج م ص

جمص *gamṣ* /adj invar/ boorish, uncultured.

ج م ع

جمع *gamaʕ (a)* /vt/ **1** to bring together, gather, collect. *gamaʕna lli yxuṣṣ-i-na* we gathered together our own things. *ʔilli yigmaʕ-u rabb-i-na ma-yfarraq-uu-ʃ ʔinsaan* (or *maxluuq*) *[prov]* what God joins together no man can put asunder. *gamaʕu ʔaṭraaf il-muʃkila* they summed up the problem from all sides. *ʔin-naṣiib gamaʕ ʃaml-u-hum marra tanya* fate brought them together once more. ‖*ma gamaʕ ʔilla-mma waffaq [prov]* ≈ birds of a feather flock together. - *ʔiṣ-ṣalaatu gaamiʕa [Isl]* call in the mosque for Muslims to gather together to perform the *ʕiid* prayer or for meeting after prayer. **2** to gather, pick. *gamʕ il-quṭn* cotton picking **3** to add (up). *bi-nigmaʕ il-murattab zaa ʔid il-badalaat* we add up the salary together with the allowances. **4** to berth (a ship). *ʔir-rayyis gamaʕ il-babuur ʕar-raṣiif* the captain berthed the ship at the quay. **5** *[print]* to set, compose. *ɦa-nigmaʕ il-ɦuruuf wi-niʕmil ʕaleeha birovaat* we'll set the type and make proofs from it. **6** *[gram]* to make (a word) plural. — /vi/ **7** to assemble. *lamma n-naas tigmaʕ* when the people gather. *ʔigmaʕ [mil]* assemble! - vn *gamʕ, gamaʕaan*; ava *gaamiʕ*; pva *magmuuʕ*.

جمع *gamʕ* /n/ **1** *[math]* addition. **2** /pl *gumuuʕ*/ *[gram]* plural.

¶ *gamʕan* or *gamaʕan* reply to the formulae *ɦaraman* (q.v.) and *min zamzam* (q.v.) = (may we be there) together.

جمعة *gamʕa*[1] /inst n, pl *-aat*/ one picking (of crop). *quṭn ʕawwil gamʕa* cotton from the first picking (a high grade of cotton).

جامع *gaamiʕ*[1] /n/ **1** /pl *-iin*/ collector. *gaamiʕ ṭawaabiʕ* stamp collector. **2** /pl *gawaamiʕ*/ mosque. **3** /no pl/ All-embracing One (epithet of God). ‖*baraka ya gaamiʕ* see *baraka*.

جامعة *gamʕa*[2] /n pl *-aat*/ **1** university. **2** league. *gamʕit id-duwal il-ʕarabiyya* or *ʔig-gamʕa l-ʕarabiyya* the League of Arab States, the Arab League.

[2] ج م س see ج م و س: *gamuus, gamuusa, gamuusi*

ج م س ن see also ج م س[1]

جمسنة *jamsana* /n/ *[obsol]* modish behaviour (of a young man, after the manner of James Dean).

جامعى *gaamiʕi* /adj/ pertaining to universities. *taʕliim gaamiʕi* university education.

مجموع *magmuuʕ* /n pl *magamiiʕ*/ **1** sum, total amount. *magmuuʕ il-filuus* the sum of the money. **2** final score (in a competition). **3** total of marks (in an examination). *ʃit-tilmiiz gaab magmuuʕ kuwayyis* the pupil got a good result.

مجموعة *magmuuʕa* /n pl *-aat*/ **1** group, assemblage, collection. *magmuuʕit suwwaaḥ* a group of tourists. *magmuuʕit fasatiin* a collection of dresses. *ʃil-magmuuʕa ʃ-ʃamsiyya* the solar system. ‖*ḍarabt-u magmuʕaat* I gave him a succession of punches. **2** /also pl *magamiiʕ*/ group of students given extra-curricular tuition to bring them up to the standard of their better colleagues.

جمعيّة *gamʕiyya* /n pl *-aat*/ **1** association, club. *gamʕiyyit if-fubbaan il-muslimiin* Muslim Youth Association. **2** government-sponsored co-operative. *gamʕiyya taʕawniyya* government-owned food store. *gamʕiyya ziraʕiyya* agricultural co-operative. **3** informal savings club.

جمعة *gumʕa* /n/ **1** /pl *gumaʕ*/ week. **2** (also *yoom (ig-) gumʕa*) Friday. *ṣalaat ig-gumʕa* Friday midday communal prayer. ‖ *ʃil-gumʕa l-yitiima [Isl]* the last Friday of Ramadan. *ʃil-gumʕa l-ḥaziina* (or *l-ʕaẓiima*, or *k-kibiira*) *[Chr]* Good Friday.

جماعة *gamaaʕa* /n pl *-aat*/ **1** formal or informal group of people. *gamaaʕit il-muʃminiin [Chr]* congregation of believers. *gamaaʕa min il-mudarrisiin* a group of teachers. *mutfakkir ʠawi ya gamaaʕa* thanks very much, everyone. ‖*gamaaʕit il-xidma l-ʕamma* the student voluntary service society. - *ʃig-gamaaʕa* indirect form of reference to one's wife, or to one's wife and family. **2** *[mil]* squad.

جماعى *gamaaʕi* /adj */ collective. *ʕilaag gamaaʕi* group therapy.

جميع *gamiiʕ* /n/ **1** *ʃig-gamiiʕ* everybody. *ʃil-gamiiʕ ʃakalu* has everyone eaten? ‖*liʕbit goon lil-gamiiʕ* street ball-game in which all the players aim at the same goal. **2** all, all of. *gamiiʕ il-biyuut* all of the houses. ‖*mimma gamiiʕ-u* something of everything necessary, as in *tilaaʠi ʕanduhum mimma gamiiʕ-u min il-muʕallabaat wi-lawaazim il-beet* you'll find they have all sorts of tinned goods and things for the house.

¶ *gamiiʕan* /adv/ everyone. *ṣabaaḥ il-xeer (ʕaleeku) gamiiʕan* good morning, one and all!

جمّاع *gammaaʕ* /n */ *[print]* typesetter, compositor.

جميع *gammiiʕ* /n */ *[print]* typesetter, compositor.

مجمع *magmaʕ* /n pl *magaamiʕ*/ **1** meeting, assembly. **2** council. *magmaʕ il-luɣa l-ʕarabiyya* or *ʃil-magmaʕ il-luɣawi* the Arabic language Academy. **3** *[Chr]* synod. **4** *[zool]* cloaca. **5** *[rur]* a small wooden (or tin) box (for keeping sugar, coffee etc.).

اتجمع *ʃitgamaʕ* or *ʃiggamaʕ* /vi/ passive of *gamaʕ*. - iva *mitgimiʕ*.

انجمع *ʃingamaʕ* = *ʃitgamaʕ*. - iva *mingimiʕ*.

جمّع *gammaʕ* /vt/ **1** to assemble, put together. *ʕafaan yigammaʕ il-ʃagzaaʃ* in order to put the parts together. *ʕaawiz yigammaʕ il-masuura di wil-masuura di* he wants to join this pipe and this pipe. ‖ *ʃit-tilifoon ma-bi-ygammaʕ-ʃ in-nimra* the number doesn't connect. - *wiḥda mugammaʕa* (rural) community centre. - *markaz tagmiiʕ* collection or assembly centre. **2** *[print]* to set, compose. *bi-ygammaʕ il-ḥuruuf wi-b-yiʕmil ʕaleeha birovaat* he sets the type and makes proofs from it. - vn *tagmiiʕ*; ava *migammaʕ*; pva *mugammaʕ*.

مجمّع *mugammaʕ* /n pl *-aat*/ **1** depot. *mugammaʕ baḍaayiʕ* goods depot. ‖*mugammaʕ il-ḥadiid wiṣ-ṣulb* the (Helwan) Steel Plant. **2**↑ co-operative store. — /no pl/ **3** *ʃil-mugammaʕ* concentration of government departments in a building on Tahrir Square, Cairo.

اتجمّع *ʃitgammaʕ* or *ʃiggammaʕ* /vi/ passive of *gammaʕ*. - vn *tagammuʕ*↑; ava *mitgammaʕ*.

تجمّع *tagammuʕ* /n pl *tagammuʕaat*/ gathering, assembly. *ʃiktafafit ṭayyarat-na tagammuʕaat lil-ʕaduw* our planes discovered enemy concentrations.

جامع *gaamiʕ*[2]↑ /vt/ to have sexual intercourse with. - vn *mugamʕa*, *gimaaʕ*; ava *migaamiʕ*.

جماع *gimaaʕ* /n/ sexual intercourse.

اتجامع *ʃitgaamiʕ* or *ʃiggaamiʕ* /vi/ to have sexual intercourse. - ava *mitgaamiʕ*.

أجمع *ʃagmaʕ* /vi/ to decide unanimously. *ʃagmaʕna* (or *ʃagmaʕna raʃy-i-na*) *ʕala l-mirwaaḥ maʕaahum* we made a joint decision to go with them. - vn *ʃigmaaʕ*; ava *mugmiʕ*↑; pva *mugmaʕ*↑.

إجماع *ʃigmaaʕ* (also *ʃigmaaʕ ir-raʃy*) /n/ unanimous agreement. *wafʠu bil-ʃigmaaʕ* they agreed unanimously.

إجماعى *ʃigmaaʕi*↑ /adj/ unanimous. *kaanit muwafʠa ʃigmaaʕiyya* it was a unanimous agreement.

اجتمع *ʃigtamaʕ* /vi/ **1** to gather, meet together, assemble. *ʃigtamaʕu fil-ḥarb* they got together during the war. *ʃis-sittaat igtamaʕu wi-ttafaʠu ʃinnuhum yiʠaṭʕu l-maḥallaat* the women got together and agreed to boycott the stores. **2** *[euphem]* to have sexual intercourse. *ʃigtamaʕ maʕa mraat-u* he had intercourse with his wife. - vn *ʃigtimaaʕ*; ava *migtimiʕ*.

اجتماع *ʃigtimaaʕ* /n/ **1** /pl *-aat*/ meeting, assembly.

makaan l-igtimaaɛ meeting place. *ɛamalna gtimaaɛ* we held a meeting. **2** (also *ɛilm il-igtimaaɛ*) /no pl/ sociology.

اجتماعي *ʔigtimaaɛi* /adj */ **1** social. *ʔaxiṣṣaa ʔi gtimaaɛi* (1) social worker, social counsellor. (2) student counsellor. ‖ *ʔil-ḥaala l-igtimaɛiyya* marital status. **2** sociable, fond of society. *raagil igtimaaɛi bi-yḥibb il-ḥafalaat* a sociable man who likes parties.

مجتمع *mugtamaɛ* /n pl *-aat*/ society, milieu. *ʔil-mugtamaɛ il-xaarigi* the outside world.

استجمع *ʔistagmaɛ* /vt/ to concentrate, gather together. *laazim nistagmaɛ kull' qiwwit-na ɛafaan niwaagih il-ɛaduw* we must gather all our forces to face the enemy. - vn *ʔistigmaaɛ*; ava *mistagmaɛ*.

ج م ل [1]

جمال *gamaal* /n/ beauty. *ya gamaal in-nabi (ɛaleek)* expression of admiration ≈ aren't you a beauty! *gamaal id-dinya bil-maal wil-ʔaxra bil-ʔaɛmaal [prov]* the beauty of this world is (attained) by wealth, and that of the hereafter by (good) deeds.

جمالي *gamaali*↑ /adj/ aesthetic.

جمالات *gamalaat* /fem pl adj/ beautiful, lovely. *banaat gamalaat* pretty girls.

الجماليّة *ʔil-gamaliyya* /prop n/ quarter and administrative district (*qism*) in eastern Cairo.

جميل *gimiil* /n pl *gamaayil*/ favour, service, good turn. *ma-b-yiḥfaẓ-ʃ ig-gimiil* he is ungrateful. *ʔilli yiɛmil gimiil yitimm-u [prov]* he who does a good turn should do it in full.

جميلة *gimiila* = *gimiil*.

جميل *gamiil* /adj pl *gumaal*/ **1** beautiful, aesthetically pleasing. *ʔil-funuun il-gamiila* the fine arts. **2** fine, excellent. *zooq gamiil* good taste. ‖ *lu raʃy' gamiil* he has good ideas.

أجمل *ʔagmal*[1] /el/ more/most beautiful, nicer/nicest. *ʔagmal ḥaaga f-ḥayaat-i hiyya l-qiraaya* the nicest thing in my life is reading.

جمّل *gammil*[1] /vt/ to beautify. ‖ *rabb-i-na ygammil-ha bis-satr* may God bless our life with His protection! - vn *tagmiil*; ava *migammil*.

تجميل *tagmiil* /n/ beautification, cosmetics. *ɛamaliyyit tagmiil* plastic surgery.

اتجمّل *ʔitgammil* or *ʔiggammil* /vi/ **1a** to be beautified. **1b** to beautify oneself. *ya hana lli yitgammilu biṣ-ṣabr* ≈ blessed be those who adorn themselves with forbearance. **2** to do a favour, offer a service. *ma-yḥibb'-ʃ ḥadd' yitgammil ɛalee* he doesn't like anyone to do him a favour (thereby making him feel under an obligation). - vn *tagammul*; ava/iva *mitgammil*.

جامل *gaamil* /vt/ **1** to treat with courtesy. **2** flatter. — /vi/ **3** to behave with courtesy. - vn *migamla*; ava *migaamil*.

مجاملة *mugamla* /n pl *-aat*/ **1** courteous expression (of greeting etc.). **2** act of courtesy.

اتجامل *ʔitgaamil* or *ʔiggaamil* /vi/ **1** to boast of doing a favour. *la titgaamil ɛalayya wala ʔatgaamil ɛaleek* let us stop pretending that we try to oblige each other. **2a** to be treated with courtesy. **2b** to be flattered. - ava/iva *mitgaamil*.

استجمل *ʔistagmil* /vt/ **1** to select for beauty. *ʔaḥsan-lu yistagmil bint' yiggawwiz-ha* he should choose a pretty girl to be his wife. **2** to consider beautiful. *mistagmila roḥ-ha* she is vain about her looks. - vn *ʔistigmaal*; ava *mistagmil*.

ج م ل [2]

جمل *gamal*[1] *(i)* /vt/ to combine, add together. *gamal-hum bi-fatma* he blanketed them under one insult. ‖ *ʔil-ḥisaab yigmil* (let the account accumulate) don't bother to pay me back now; I'm keeping a note of what you owe (in situations of frequent financial transaction). - vn *gaml*; ava *gaamil*; pva *magmuul*.

جمل *gumla* /n/ **1a** /pl *gumal*/ total, sum. *gumlit il-baḍaayiɛ miit ḥitta* the total of the goods is one hundred items. *ḥ-adfaɛ big-gumla* I'll pay in a lump sum. ‖ *gumlit naas* a bunch of people. **1b** /no pl/ bulk. *ʔil-ʔintaag big-gumla* mass production. *tigaarit ig-gumla* the wholesale trade. *tuggaar nuṣṣ' gumla* merchants dealing in small quantities of wholesale goods. **2** /pl *gumal*/ phrase, sentence. *gumal musiqiyya* musical phrases.

جملة *gimla: bi-gimlit (dool)* and *min gimlit (dool)* expression dismissive of the importance of a loss sustained, in view of a preceding, and much greater, loss. *xalli g-gineeh da b-gimlit illi ḍaaɛu* count that pound as one of all the rest that were lost.

اتجمل *ʔitgamal* or *ʔiggamal* /vi/ to be combined, be added together. - iva *mitgimil*.

انجمل *ʔingamal* = *ʔitgamal*. - iva *mingimil*.

أجمل *ʔagmal*[2]↑ /vt/ **1** to combine, add together. **2** to sum up. *ʔigmil-li l-mawḍuuɛ fi-talat kilmaat* summarize the subject for me in three words. - vn *ʔigmaal*; ava *mugmil*; pva *mugmal*.

إجمالي *ʔigmaali* **1** /adj/ total, overall. *ʔil-maɛna l-ʔigmaali* the overall meaning. **2** /n/ total (sum). *ʔigmaali taman il-beeɛ* the total sales price.

مجمل *mugmal*↑ /n pl *-aat*/ summary, outline.

ج م ل [3]
جمل *gamal*[2] /n pl *gimaal, gimíla*/ camel. ‖*ɛeen gamal* walnut. *-ma-ʃuft*[i]*-ʃ il-gamal wala l-gammaal [prov]* (I have seen neither the camel nor the cameleer) I have no idea who was responsible. *- ʃil-gamal bima ḥamal* (the camel with what it carried) the whole caboodle. *-ma-gaa-ʃ fi-gamal* ≈ he hasn't asked for too much! *- ʃis-sikka tfawwit ig-gamal* (the way permits the passage of the camel) no-one is forcing (you etc.) to stay! *-ya gamal-i* expression of mourning by a woman lamenting her dead husband. *-gamal il-baḥr* pelican.
جملي *gamali* /adj invar/ **1** of or pertaining to camels. *laḥma gamali* camel meat. **2** requiring long cooking. ‖*ʃaay gamali [joc]* tea very late in coming.
جمّال *gammaal* /n pl *-iin, gammaala*/ camel driver.
جمّل *gammil*[2] /vi/ to work as a camel-driver. -vn *tagmiil*; ava *migammil*.

ج م ل ك
جملكّة *gumalakka, gamalakka* <It *gommalacca*> /n/ lac, shellac.

ج م ل و ن
جمالون *gamaloon* <prob It *comignolo*> /n pl *-aat*/ pitched roof.

ج م م
استجم *ʃistagamm*↑ /vi/ to relax, take things easy. -vn *ʃistigmaam*; ava *mistigimm, mustagimm*.

ج م م ي ز see ج م ز : *gimmeez*

ج م ه ر
جمهرة *gamhara* = *gumhuur*.
جمهور *gumhuur, gamhuur*↓ /n/ **1** /pl *gamahiir*/ crowd, mass or multitude of people. *gumhuur in-naaxibiin* the mass of electors. *gamahiir if-faɛb* the popular masses. **2** /no pl/ public. *di liiha gumhuur* there is a public for this. *gumhuur ik-koora* the football public. *ʃil-muwaẓẓáf rakan ig-gumhuur* the employee kept the public waiting.
جماهيري *gamahiiri* /adj/ pertaining to the public, popular.
جمهوري *gumhuuri* /adj */ republican. ‖*ʃil-ḥaras ig-gumhuuri* the Presidential Guard. *-qaraar gumhuuri* Presidential decree.
جمهوريّة *gumhuriyya* /n pl *-aat*/ republic. *gumhuriyyit maṣr il-ɛarabiyya* the Arab Republic of Egypt.
اتجمهر *ʃitgamhar* or *ʃiggamhar* /vi/ to gather in crowds. *ʃin-naas itgamharit fil-midaan* crowds gathered in the square. -ava *mitgamhar*.

ج م و س
جاموس *gamuus* <P *gâmûs*> /coll n/ water buffalo(es). ‖*gamuus ʃabyaq* stupid oaf.
جاموسة *gamuusa* **1** /n pl *gawamiis, gamusaat*/ female water buffalo. **2** /masc and fem adj/ oafish. *ʃamma raagil gamuusa ṣaḥiiḥ* what a great lout of a man!
جاموسي *gamuusi* /adj/ pertaining to water buffalo. *laḥma gamuusi* (1) buffalo meat. (2) very tough meat.

ج ن ء see [1] ج ن ى : *ginaaʃi*

ج ن ب
جنب *ganab (i)* **1** /vt/ to set aside. *ʃignib iṭ-ṭarabeeza fir-rukn* move the table aside into the corner. **2** /vi/ to move aside. *qult-i-lu yignib fiwayya* I told him to move aside a little. - vn *ganabaan*; ava *gaanib*; pva *magnuub*.
جانب *gaanib*↑ /n pl *gawaanib*/ **1** aspect. *min il-gaanib il-qanuuni* from the legal aspect. ‖*layyin il-gaanib* gentle. *-ɛaziiz il-gaanib* powerful. *-marhuub il-gaanib* feared. *-fasiiḥ il-gawaanib* wide, spacious (of buildings, towns etc.). **2** side. ‖*ʃila gaanib* besides, in addition to. *-ɛala gaanib* to a degree, as in *ɛala gaanib kibiir mil-ʃahammiyya* of great importance. — /prep/ **3** next to, beside. *gaanib il-baab* next to the door.
جنب *gamb*[2] **1** /n pl *ginaab, ʃagnaab, gunuub*/ side. *gamb iṭ-ṭariiq* the side of the road. *siib-u ɛala gamb* leave it aside. *ginaab-i wagɛaa-ni* my sides ache. *ma-timʃii-ʃ min gamb-a-ha* don't leave her side. ‖*ʃiriiṭ gamb [text]* selvage. *-zamb-u ɛala gamb-u [prov]* he'll, get (or, has got) his just deserts. *-kull*[i] *waaḥid yinaam ɛag-gamb illi yrayyaḥ-u* (since agreement is impossible) let everyone go his own way. *-xad gamb*[i] *min* to boycott, keep aloof from, as in *leeh waaxid gamb*[i] *minni* why are you avoiding me? **2** (also *gamb*[i] *min*) /prep, w pron suff often *gambii-*/ **2a** next to, beside. *gamb if-fibbaak* next to the window. *faatit gambiina* she passed by us. **2b** along with, together with. *haati ʃwayyit ṭurʃi gamb il-ʃakl* bring some pickles with the food.
¶ *gamban: gamban silaaḥ [mil]* lower arms!
جنبة *gamba* /n pl *-aat, ginab*/ pannier (especially one of a pair carried by a donkey). *ʃana lli wqiɛt*[i] *min qaɛr ig-gamba* (it is I that fell from the bottom of the pannier) I am hopelessly unlucky.
جنبيّة *gambiyya* /n/ sheath-knife (in the jargon of *fitiwwaat*).
جنب *gunub* /adj invar/ *[Isl]* ritually impure after sexual intercourse (of the human body).

جنّبيّة *gannabiyya* /n pl *gananiib*/ **1** plot of land on either side of a secondary canal. **2** ditch alongside a road or railway track.

أجنبى *ʔagnabi* /pl *ʔagaanib*/ **1** /adj/ foreign. **2** /n/ foreigner.

جناب *ganaab* /n/ *[obsol]* honorific used as a respectful form of reference and address. *ganaab-ak* Sir. ‖*xallii-ha ʕala ganaab illaah* leave it up to God. - *ʔil-ganaab il-ʕaali [obsol]* title of, and form of reference to, the Sultan of Turkey.

جنابة *ganaaba* /n/ *[Isl]* state of ritual impurity after sexual intercourse.

جنوب *ganuub* /n/ south.

جنوبى *ganuubi* /adj/ southern.

جنيبى *ginneebi* /adv/ **1** sideways. *raakib ginneebi* riding sidesaddle. **2** side by side.

اتجنب *ʔitganab* or *ʔigganab* /vi/ **1** to be set or moved aside. **2** to move away, remove oneself. - ava/iva *mitginib*.

انجنب *ʔinganab* = *ʔitganab*. - ava/iva *minginib*.

جنّب *gannib* /vt/ **1** to turn sideways. *gannib il-maktab ʕal-ħeeṭa* turn the desk sideways on to the wall. **2** *[leg]* to demarcate (boundaries). - vn *tagniib*; ava/pva *migannib*.

تجنيبة *tagniiba* /pl *-aat, taganiib*/ instance noun of *tagniib*.

اتجنّب *ʔitgannib* or *ʔiggannib* **1** /vt/ to avoid. *ʔitgannibna l-munaqʃa* we avoided the argument. **2** /vi/ *[leg]* **2a** to fix a demarcation line. **2b** to be demarcated. - vn *tagannub*; ava/iva *mitgannib*.

أجنب *ʔagnab* /vi/ *[Isl]* to become ritually impure as a result of having sexual intercourse. - ava *mugnib*.

اجتنب *ʔigtanab* /vt/ to keep away from, avoid, boycott. - vn *ʔigtinaab*; ava *migtinib*.

ج ن ب ز see ج م ب ا ز : *gumbaaz*

ج ن ت ل

جنتل *jintil* <Engl *gentle(man)*> /adj invar/ **1** well-bred, refined. *walad jintil wi-muʃaddab qawi* a well-bred and very polite boy. **2** gentle. *xallii-k jintil maʕaaha* treat her gently.

جنتلة *jantala* /n/ **1** good-breeding. **2** gentleness.

ج ن ج

جانجا *ganga* <Fr *changeant*> /adj invar/ shot (of a fabric).

ج ن ج ل see ج ل ج ل : *gingil*

[1] ج ن ح

جنح *ganaħ (i)* **1** /vt/ to strand, run (a ship) aground. *ʔil-marakbi ganaħ il-qaarib ʕar-raml' w-saħab-u lil-barr* the boatman ran the boat aground on the sand and pulled it ashore. **2** /vi/ to run aground. - vn *ganħ, ganaħaan*; ava *gaaniħ*; pva *magnuuħ*.

جناح *ginaaħ, ganaaħ* /n pl *ʔigniħa, ʔagniħa, ginaħaat*/ **1** wing (of a bird, an aeroplane). ‖*maksuur ig-ginaaħ* weak, in need of protection. - *ʔilli txaaf ʕala ragil-ha wi-tviir tiqaṣqaṣ ginaaħ-u la yṭiir [prov]* she who worries about her husband and gets jealous should clip his wings so that he does not fly away. - *ʕala gnaaħ is-surʕa* (also *ʕala ganaah ir-riiħ*) very quickly. - *ʕala gnaaħ il-ʔasiir* by radio. - *ʔixfiq ginaaħ-ak* be modest and humble. - *dayman faarid ginaaħ-u* he is always overbearing. **2** wing (of a building). **3** suite. *ħagazna-lhum ginaaħ fil-lukanda* we reserved a suite in the hotel for them. **4** *[soccer]* wing. *ʔig-ganaaħ il-ʔayman* the right wing.

جنّيح *gunayyiħ* /n pl *-aat*/ aileron.

جنح *gannaħ* **1** /vt/ to swing or stretch (the arms) expansively. *gannaħ diraʕaat-u* he stretched out his arms. – /vi/ **2** to swing the arms expansively, take up a lot of room (particularly when walking). **3** to tilt, stand at an angle (of a vehicle with a bent axle or wrecked suspension). - vn *tagniiħ*; ava/pva *migannaħ*.

مجنّح *mugannaħ↑, migannaħ* /adj/ winged.

[2] ج ن ح

جنحة *gunħa* /n pl *gunaħ*/ misdemeanour, civil offence.

ج ن د

جند *gund* /coll n, pl *ʔagnaad*/ body of troops. *gund' murtazaqa* mercenaries. ‖*gundu llaah [Isl]* the faithful. - *gund iʃ-ʃayṭaan* the followers of Satan. - *ʔagnaad ir-rabb [Chr]* the hosts of the Lord. - *rabb il-ʔagnaad [Chr]* the Lord of hosts.

جندى *gundi* /n pl *gunuud*/ **1** *[mil]* ordinary soldier (in contrast with an officer). **2**↑ soldier, fighting-man (of any rank). *ʔil-gundi l-maghuul* the Unknown Soldier.

جنديّة *gundiyya* /n/ military service.

جند *gindi* /n pl *ganaadi*/ *[obsol]* Turkish soldier, mameluke. *ħadd' yquul lig-gindi ʁaṭṭi ṭiiz-ak [prov]* (who would dare to tell the mameluke 'Cover your arse'?) ≈ who dares tell a powerful man how to behave?

جنّد *gannid* /vt/ **1** *[mil]* to recruit, conscript. **2** to employ, call upon the services of (s.o.), enlist the help of (s.o.). *gannidt' nafs-i l-xidmit-hum* ≈ I devoted myself to serving them. - vn *tagniid*; ava *migannid*; pva *mugannad*.

مجنّد *mugannad* /n */ recruit, conscript.

اتجنّد ʔitgannid or ʔiggannid /vi/ **1** to be recruited, be conscripted. **2** to have one's services enlisted. - iva *mitgannid*.

ج ن د ر

جندر *gandar* <prob Fr *calandre*> /vt/ to mangle (laundry), calender (paper). - vn *gandara*; ava/pva *migandar*.

اتجندر ʔitgandar or ʔiggandar /vi/ to be mangled (of laundry), be calendered (of paper). - iva *mitgandar*.

ج ن د ف -

جندوفلي *gandufli* /coll n/ clam(s).

ج ن د ل

جندل *gandal* **1** /n pl *ganaadil*/ boulder, especially obstructing the course of a river. **2** *ganaadil* /pl n/ rapids, cataract.

جندل *gandil*↑ /vt/ to cause to fall down dead (like a stone). *ḍarab-u bin-naar gandil-u* he gunned him down. - vn *gandala*; ava/pva *migandil*.

اتجندل ʔitgandil or ʔiggandil /vi/ to fall down dead, be made to fall down dead. - vn *tigandiil*; ava/iva *mitgandil*.

ج ن ر see ج ن ن ا ر : *ginnaari, gunnaari*

ج ن ز [1]

جنازة *ganaaza* /n pl *-aat*/ funeral, funeral procession. *ṣalaat il-ganaaza [Isl]* ritual prayer said over the coffin. ‖*ganaaza ḥarra wil-mayyit kalb [prov]* ≈ a lot of fuss about nothing. - *yiqtil il-qatiil wi-yimfi f-ganazt-u* (he walks in the funeral procession of the man he murdered) he is utterly brazen. - *ʔin fa-lla ʔamfi f-ganazt-u* ≈ I'd like to see him dead and buried!

جنايزي *ganayzi* /adj/ pertaining to funerals. *ṣala ganayziyya [Chr]* funeral service.

جنّاز *ginnaaz* /n pl *gananiiz*/ *[Chr]* **1** funeral. **2** funeral service. *bi-yiqru l-ginnaaz ɛal-mutanayyiḥiin* they read the funeral service over the dead.

جنّز *ganniz* /vt/ *[Chr]* to perform a funeral service for. *ṣalaat it-tagniiz* funeral service. - vn *tagniiz*; ava *miganniz*.

اتجنّز ʔitganniz or ʔiggannniz /vi/ *[Chr]* to be given a funeral. ‖*ya ʃeex ruuḥ ʔigganniz* drop down dead, you! - iva *mitganniz*.

ج ن ز [2]

جنز *jinz* <Engl> /n pl *-aat*/ jeans. *banṭalunaat jinz* a pair of jeans. *qumaaʃ jinz* denim. - also *jins*.

ج ن ز ب -

جنزبيل *ganzabiil* /n pl/ ginger. - also *zangabiil*↑.

ج ن ز ر [1]

جنزار *ginzaar* <P *zangâr*> /n/ verdigris.

جنزارة *ginzaara* = *ginzaar*.

جنزاري *ginzaari* /adj invar/ bluish-green, turquoise (in colour).

جنزر *ganzar*[1] /vi/ to become verdigrised. ‖*muxx-u mganzar* ≈ he's thick-headed. - *ya mganzara [abus]* you filthy hag! - vn *ganzara*; ava *miganzar*.

ج ن ز ر [2]

جنزير *ganziir* <P *zanjîr*> /n pl *ganaziir*/ **1** heavy metal chain. *ganziir muxṭaaf* anchor chain. *ganziir ɛagala* bicycle chain. **2** track (on, e.g., a bulldozer, tank).

جنزر *ganzar*[2] /vt/ to chain. *ganzar il-bawwaaba* he fastened the gate with a chain. - vn *ganzara*; ava/iva *miganzar*.

مجنزر *miganzar* /adj/ tracked, possessing a track. *ɛarabiyya mganzara* tracked vehicle.

اتجنزر ʔitganzar or ʔigganzar /vi/ to be fastened with a chain, be chained together. - vn *tiganziir*; iva *mitganzar*.

ج ن س [1]

جنس *gins* /n pl *ʔagnaas*/ **1a** type, kind, species. *ʔig-gins il-baʃari* the human race. *ʔil-wiṭwaaṭ miʃ min gins iṭ-ṭeer* a bat is not a bird. *ʔin-naas ʔagnaas* ≈ it takes all kinds to make a world. *gins[i] bazramiiṭ* mixed breed. ‖*ya gins[i] kalb* you dog! **1b** /always w neg/ (not a) single. *ma-fii-ʃ gins[i] waaḥid* there's not a single person there. *wala gins[i] kilma* not a single word. **2** race, nation. *bi-yikrah ʔahl[i] gins-u* he hates his compatriots. **3** *[mus]* tetrachord. – /no pl/ **4a** sex. *ʔig-gins il-laṭiif* the fair sex. **4b** sexual activity.

جنسي *ginsi* /adj/ pertaining to sex. *ʔif-fuzuuz ig-ginsi* sexual perversion. *kutub ginsiyya* sex books.

¶ *ginsiyyan*↑ /adv/ sexually.

جنسيّة *ginsiyya* /n pl *-aat*/ nationality. *ʔidaarit ig-gawazaat wig-ginsiyya* passport and immigration office.

جنّس *gannis* /vt/ **1** to sort or classify according to type. **2** to harmonize, blend. *gannisit il-fustaan maɛa l-kulfa* she made the dress and the trimmings harmonious. - vn *tagniis*; ava/pva *migannis*.

مجنّس *migannis* /adj */ cross-bred, of mixed descent, mongrel. ‖*qumaaʃ migannis [text]* blended cloth, cloth of two sorts one markedly inferior to the other.

اتجنّس ʔitgannis or ʔiggannis /vi/ **1** to be sorted, be classified. ‖ *ʔitgannis bi-ginsiyya* to acquire citizenship, as in

ʔitgannist' *big-ginsiyya l-ʔamrikiyya* I acquired American citizenship. **2** to be harmonized, be blended. - ava/iva *mitgannis*.

جانس *gaanis* /vt/ **1** to resemble, be of the same kind or nature as. *ʔil-ħumaar il-mixaṭṭaṭ bi-ygaanis il-ħumaar il-ɛaadi* the zebra is akin to the donkey. **2** to match up. - vn *migansa*; ava *migaanis*.

اتجانس ʔitgaanis or ʔiggaanis /vi/ **1** to become similar. **2** to be matched up. - vn *tagaanus*; ava/iva *mitgaanis, mutagaanis*↑.

تجانس *tagaanus*↑ /n/ similarity, harmony.

ج ن س [2]

جينس *jins* <Engl> /n pl *-aat*/ jeans. *ɋumaaʃ jins* denim. - also *jinz*.

ج ن ش

جنش *ganʃ* <It *gancio*> /n pl *-aat*/ hook-shaped end of a metal rod.

جنشة *ganʃa* = *ganʃ*.

جنّش *gannif* /vt/ to bend the end of a metal rod into a crook or U-shape. - vn *tagniif*; ava *migannif*.

اتجنّش ʔitgannif or ʔiggannif /vi/ to be bent into a crook or U-shape. - iva *mitgannif*.

ج ن ص

جنص *ganṣ* <Fr *ganse*> /n/ piping, braid.

ج ن ط

جنط *janṭ* <Fr *jante*> /n pl *junúṭa*/ wheel-rim, felloe. ‖*ɛala j-janṭ* penniless.

ج ن ك ل)-(

جونكلير *junkileer* <Fr *jongleur*> /n pl *-aat*/ juggler.

جانكليس *ganakliis* or *janakliis* <prop n *Gianaclis*> /n/ **1** variety of grape, reddish-yellow and large-sized (used for wine). **2** brand name of wine.

ج ن ل ل

جونلّة *gunilla* <It *gonnella*> /n pl *-aat*/ skirt.

ج ن ن [1]

جنّ *gann (i)* /vt/ to drive mad. *di ħaaga tginn* this (is so infuriating, or, so marvellous, that it) drives one crazy! *da raagil yiginn illi ma-yitgann'-ʃ* that man would drive the sanest person mad! *nawya ɛala gnaan-i* she's trying to drive me mad! - vn *ginaan*; ava *gaanin*; pva *magnuun*.

جنان *ginaan* /n/ **1** madness, insanity. **2** /used in apposition/ something wonderful or fantastic. *di bint' gnaan* she's a marvellous girl! — /interj/ **3** crazy! fantastic! super!

مجنون *magnuun* /pl *maganiin*/ **1** /adj/ **1a** crazed, crazy. *ma-tibɋaa-ʃ magnuun* don't be crazy! ‖*ya ṭamaaṭim ya magnuuna [vendor's cry]* crazy tomatoes (referring to the wild movement in price). **1b** infatuated with. *magnuun koora* football crazy. *magnuuna bir-raqṣ* she's crazy about dancing. **2** /n/ madman, lunatic.

جنّة *ganna'* /n/ a fit or attack of madness. *min ʔawwil naẓra gat-lu ganna sm-a-ha muna* at first sight he went wild with love (or: hatred) for Mona.

أجنّ ʔagann /el/ more/most insane, infatuated or infatuating. *ʔiʃ-furba tgannin wil-ʔakl' ʔagann* the soup is great and the food even better!

جنون *gunuun* /n/ madness, insanity. ‖*ʔil-gunuun funuun [prov]* ≈ madness takes many forms (said upon witnessing or hearing of something strange or eccentric).

جنوني *gunuuni* /adj/ crazy, insane. *taṣarrufaat gununiyya* crazy behaviour. *b-aħibb-a-ha b-ʃakl' gunuuni* I love her to distraction.

جنونيّة *gununiyya* /n/ craziness, foolish behaviour. *balaaʃ gununiyya* don't be silly! *ɛandu ʃwayyit gununiyya* he's a little crazy.

جنونة *gannuuna* /n/ **1** quick temper. *ʔir-raagil da b-gannuuna* this man is hot-tempered. *ṭilɛit gannunit-ha* she went into one of her fits of temper. **2** uncontrolled desire. *gannunt-u l-ɋumaar* he is addicted to gambling.

اتجنّ ʔitgann or ʔiggann /vi/ to become mad, be driven mad. - ava/iva *mitgann*.

جنّن *gannin* /vt/ **1** to drive insane, madden. *ħubb-u ħa-ygannin-ni* his love will drive me out of my mind! **2** to infatuate. — /vi/ **3** to cause madness. **4** to inspire delight. *ʔil-ɋumaaʃ da yigannin* this cloth is gorgeous! - ava *migannin*.

اتجنّن ʔitgannin or ʔiggannin /vi/ **1a** to go mad or become insane. **1b** to get into a state, become excessively upset. *lamma-nta tʕaxxart itgannint' w-ruħt il-ɋism* when you were late I got into a state and went to the police station. **2** to become infatuated. *ʔitganninu ɛal-ɛarabiyya* they went crazy over the car. - ava/iva *mitgannin*.

استجنّ ʔistigann /vt/ to consider mad. *ʔinta b-tistigann-i-ni* do you take me for a lunatic? - vn *ʔistignaan*; ava *mistiginn*.

ج ن ن [2]

جنّ *ginn* /coll n/ jinn, demons. *bi-yiʃtaɣal·zayy ig-ginn* he works like a demon. ‖*ginn' mṣawwar* ≈ the devil personified (applied to a mischievous or clever person). - *wala l-ginn il-ʔazraq yiɛraf ṭariiq-u* ≈ not a soul knows

where he has gone. - *ginn-u w-ɛafriit-u lli yṣaḥḥii badri* ≈ he will be furious with anybody who dares to wake him early.

جِنّي *ginni* /unit n */ a male jinni or demon.

جنيّة *ginniyya* /unit n pl *-aat*/ a female jinni or demon. ‖ *ʃibn[i] ginniyya* a clever devil.

جان *gaan* /coll n/ demons, jinn.

ج ن ن [3]

جنّة *ganna[2]* /n/ **1** *ʃig-ganna* Paradise. *ɛaʃam ʃibliis fig-ganna* (Satan's hope of Paradise) a total impossibility. ‖ *ɛaṣfuur ig-ganna* /coll n/ (1) swallow(s). (2) bird-of-Paradise flower(s). **2** /pl *-aat*/ **2a** paradise. *ganna min ɣeer naas ma tindaas [prov]* a paradise without people is not worth walking in. **2b** any of the (seven) degrees of Paradise.

جنينة *gineena* /n pl *ganaayin*/ **1** garden. **2** park. *gineenit il-ḥayawanaat* the zoo. **3** orchard.

جنايني *ganayni* **1** /n pl *-yya*/ gardener. ‖ *yibiiɛ il-ward[i] lig-ganayniyya [prov]* (he tries to sell flowers to the gardeners) ≈ he takes coals to Newcastle. **2** /adj */ garden. *ɛinab ganayni* garden grapes.

ج ن ن [4]

جنين *ganiin* /n pl *ʃaginna*/ **1** foetus, embryo. **2** germ (of a seed).

ج ن ن ا ر

جنارى *ginnaari* or *gunnaari* /adj/ flame-red.

ج ن ى [1]

جنى *gana[1] (i)* /vi/ **1** to commit a crime, sin. *ganit* (or *ganat) fi-ḥaqq-i gnaaya wiḥʃa xaaliṣ* she committed a most terrible crime against me. *ʃil-magni ɛalee* the victim of a crime. **2** to bring suffering (upon s.o., usually unintentionally). *ganeet ɛala-bn-i* I wronged my son. - vn *ginaaya*; ava *gaani*; pva *magni*.

جناية *ginaaya* /n pl *-aat*/ felony, crime, criminal act. *maḥkamit il-ginayaat* criminal court. ‖ *ḥ-awaddii fi-gnaaya* ≈ I'll get the law onto him!

جانى *gaani* /n pl *gunaaḥ↑ / [leg]* criminal.

جنائى *ginaaʃi↑* /adj */ criminal. *ʃil-qaḍaaʃ noɛeen - madani wi-gnaaʃi* there are two kinds of jurisprudence, civil and criminal.

اتجنى *ʃitgana[1]* or *ʃiggana[1]* /vi/ (impersonal) passive of *gana. kaanit bariiʃa wi-tgana ɛaleeha* she was innocent but suffered unjustly. - iva *mitgini*.

اتجنى *ʃitganna* or *ʃigganna* /vi/ to behave injustly, bring a false accusation. *ʃitgannu ɛalayya* they wronged me. - vn *taganni*; ava *mitganni*.

ج ن ى [2]

جنى *gana[2] (i)* /vt/ to gather, pick, harvest (especially cotton). ‖ *ʃilli zaraɛ gana [prov]* he who sows will reap. - vn *gany*; ava *gaani*; pva *magni*.

جنّا *ganna[3]* /n pl *-yiin, gannaaya*/ picker, harvester. *gannaayit il-quṭn* a woman cotton-picker.

اتجنى *ʃitgana[2]* or *ʃiggana[2]* /vi/ to be gathered, picked or harvested. - iva *mitgini*.

ج ن ى ه

جنيه *gineeh* <Engl *guinea*> /n pl *-aat*/ **1** one pound (currency). *nuṣṣ[i] gneeh* fifty piastres. *rubɛ[i] gneeh* twenty-five piastres. **2** (golden) guinea. *gineeh ʃingiliizi* a British gold sovereign. ‖ *sumɛit-u zayy ig-gineeh id-dahab* his reputation is spotless. - *kilmit-u zayy ig-gineeh id-dahab* he keeps his promise, he tells the truth. - *muxx-u zayy ig-gineeh id-dahab* he has a brilliant mind.

ج ه [1] see ج و ه : *giha*

ج ه [2] see ج ى : *gih*

ج ه ا ر

جهار *gihaar, guhaar* <P *chahâr*> /n pl *-aat*/ four (in dice etc.).

جهاركاه *girka* see ج ر ك

ج ه ج ه –

جهجهون *gahgahoon* /adv/ haphazardly, in any old way. *waaxid kull[a] ḥaaga gahgahoon* taking everything as it comes. - /adjectivally/ *raagil gahgahoon* a simple fellow.

ج ه د

جهد *gahad (i)* /vt/ to fatigue, exhaust, overwork. *gahad nafs-u min kutr iʃ-ʃuɣl* he overworked himself. - ava *gaahid*.

جهد *guhd* /n/ **1** effort, endeavour. *ḥa-nistafiid min iṣ-ṣabr[i] wil-ɛaraq wig-guhd* we will profit from patience, sweat and effort. *bazalt[i] kull[i] guhd-i fil-mirwaaḥ badri* I made every effort to go home early. **2** *[elec]* potential, voltage. **3** *[phys]* stress.

جهد *gihd* /n/ capacity, competence. *ɛamal ʃaaxir ma f-gihd-u* he did as much as he could. ‖ *kull[i] waaḥid ɛala qadd[i] gihd-u* everyone according to his means.

جهود *guhuud↑* /pl n/ exertions. *guhuud id-dawla f-magaal il-xadamaat* the efforts of the state in the sphere of public utilities.

جهيد *gahiid: guhd[i] gahiid* tremendous effort, great dif-

ficulty. *wi-b-guhd' gahiid qidirna nfuqq' ṭariq-na f-qalb iz-zaḥma* with a great deal of trouble we managed to elbow our way through the crowd.

مجهود *maghuud* /n pl *-aat*/ effort, exertion. *ʕil-maghuud il-ḥarbi* the war effort. *maghuud zihni* mental effort.

جاهد *gaahid* /vt/ **1** to struggle against, seek to suppress. ‖*laazim tigaahid nafs-ak* you must try to suppress your desires. **2** to wage war or jihad (against). *qariibit gihaad* war tax. — /vi/ **3** to strive, do one's utmost. *bi-ygaahid fi-sabiil maṣr* he is entirely devoted to serving Egypt. *ʕil-kiniisa l-migahda* the Church militant. - vn *migahda, gihaad*; ava *migaahid*.

جهاد *gihaad* /n/ war. *ʕil-gihaad fi-llaah* the Sufi concept of a conflict between spiritual and material desires.

جهادى *gihaadi* /adj */ military.

جهاديّة *gihadiyya* /n/ *[obsol]* military service. *ʕil-gihadiyya* former style of the Ministry of War.

أجهد *ʔaghad*↑ /vt/ to wear out, exhaust. *ʕis-sabbaaḥ baqa mughad* the swimmer became exhausted. *maḥṣuul mughid lil-ʕarḍ* a crop which overworks the soil. - vn *ʕighaad*; ava *mughid*; pva *mughad*.

اجتهد *ʕigtahad* /vi/ to strive, make an effort, do one's best. *ṭaalib mugtahid* a diligent student. - vn *ʕigtihaad*; ava *mugtahid, migtihid*.

اجتهاد *ʕigtihaad* /n/ **1** effort, diligence. **2** judgement, interpretation, (personal) assessment. *ʕil-masʕala b-tiɛtimid fin-nihaaya ɛala gtihaad-ak if-faxṣi* the matter depends in the final analysis on how you personally see things.

اجتهادى *ʕigtihaadi* /adj/ based on personal judgement. *ʕahu wis-salaam - ḥall igtihaadi* it is just a personal solution.

ج ه ر [1]

جهر *gahar*[1]↑ *(a)* /vi/ to make a proclamation (in a loud voice), talk openly and brazenly. *gahar bi-raʕy-u* he declared his opinion openly. *gahar bil-maɛṣiya* he flaunted his sin. ‖*gahar biṣ-ṣala [Isl]* to recite the first two *rakɛa* of the ritual prayer in a loud voice. - vn *gahr, gahaara*; ava *gaahir*; pva *maghuur*.

جهرا *gahran* /adv/ openly, publicly.

جهارا *gahaaran, gihaaran*↑ /adv/ openly, publicly. *faḍaḥ-hum gahaaran* he made a public scandal of them. ‖*gahaaran nahaaran* in broad daylight, as in *saraqu f-faqqa gahaaran nahaaran* they burgled the flat in broad daylight.

جهورى *gahwari, gahuuri* /adj/ loud (of voice). *dayman yitkallim bi-ṣoot gahuuri* he always speaks in a loud voice.

جهير *gahiir*↑ /adj/ loud (of sound). *nadra lamma tismaɛ iṣ-ṣoot il-gahiir fil-mazziika ṣ-ṣiini* you rarely hear a loud sound in Chinese music.

مجهر *mighar*↑ /n pl *magaahir*/ microscope.

جاهر *gaahar*↑ or *gaahir* /vt/ to make an open declaration to (s.o.), address (s.o.) frankly. *bi-ygahir-ni b-ɛadawt-u* he openly expresses his hostility to me. *dayman tigaahir bi-raʕy-a-ha fin-naas* she always lets you know exactly what she thinks of people! - vn *mugahra, migahra*; ava *mugaahir, migaahir*.

ج ه ر [2]

جهر *gahar*[2] *(a)* /vi/ to become dazzled. *naẓar-u gahar* his eyes were dazzled. - vn *gahar, gaharaan*; ava *gaahir*.

جهر *gahar*[3] *(i)* /vt/ to dazzle. *ʕil-baṣaṣaan lif-ʃams' yighir in-naẓar* looking at the sun dazzles the eyes. - vn *gahar, gaharaan*; ava *gaahir*.

أجهر *ʕaghar* /adj, fem *gahra*, pl *guhr*/ albino.

ج ه ر [3] see ج ه ا ر : *gihaar, guhaar*

ج ه ز

جهز *gihiz (a)* /vi/ to become ready. *il-fustaan ḥa-yighaz ʕimta* when will the dress be ready? - vn *gahazaan*; ava *gaahiz*.

جاهز *gaahiz* **1** /adj */ ready-made. *huduum gahza* ready-to-wear clothes. *xarasaana gahza* precast-concrete. **2** /adv/ already. *milawwin gaahiz* ready-coloured. *ʕana laabis gaahiz wi-mistanni* I'm already dressed and waiting.

جهاز *gihaaz* /n pl *ʕaghiza*/ **1** piece of equipment, appliance, apparatus. *gihaaz tilivizyoon* a television set. *gihaaz ḍaɣṭ* pressure gauge. ‖*ʕaghiza taɛwiḍiyya* artificial limbs. **2** system. *ʕil-gihaaz il-ɛaḍali* the muscular system. **3** (official) body, organizational apparatus. *ʕil-ʕaghiza l-ḥukumiyya l-muxtaṣṣa* the governmental bodies concerned. **4** *[euphem]* private parts. — /pl *-aat*/ **5** trousseau (including household furniture).

جهّز *gahhiz* /vt/ **1** to prepare. *gahhizt il-ʕakl* I prepared the food. *libsu maraayil wi-gahhizu ʃunaṭ-hum* they put on smocks and got their satchels ready. **2** to furnish (a home for newly-weds), prepare a trousseau. **3** *[text]* to dress, finish (cloth). - vn *taghiiz*; ava/pva *migahhiz*.

تجهيزات *taghizaat* /pl n/ preparations. *ʕit-taghizaat iḍ-ḍaruriyya lir-riḥla* the preparations necessary for the trip.

اتجهّز *ʕitgahhiz* or *ʕiggahhiz* /vi/ **1** to get ready, prepare oneself. **2** passive of *gahhiz*. - ava/iva *mitgahhiz*.

أجهز *ʕaghaz*↑ /vi/ to put an end (to s.th.), do away (with s.o. or s.th.). *ʕiṭṭarreena nighiz ɛal-ḥayawaan*

il-magruuḥ we were forced to put down the wounded animal. *min fagʕit-u ʔaghaz ʕal-ʔakla l-waḥd-u* he was so gluttonous that he finished off the meal on his own. - vn *ʔighaaz↑*; ava *mughiz↑*.

ج ه ض

أجهض *ʔaghaḍ* **1** /vt/ to abort (a pregnant woman). *ʔaghaḍit nafs-a-ha* she caused herself to abort. - /the literary passive form occurs/ *ʔughiḍat fif-ʃahr il-ʔawwal* she had an abortion in the first month (of pregnancy). **2** /vi/ to miscarry, abort. - vn *ʔighaaḍ*.

إجهاض *ʔighaaḍ* /n/ abortion.

ج ه ل

جهل *gahal (a)* /vt/ **1** to be ignorant of. ‖ *ʔilli ma-yiʕraf-ak yighal-ak [prov]* ≈ to know you is to appreciate you. **2** to behave according to the dictates of youth. *gahal wi-taab* ≈ he has sown his wild oats. - vn *gahl, gihl↓*; ava *gaahil*; pva *maghuul*.

جهل *gahl* /n/ **1** ignorance. *ʔil-gahl[a] ʕadiww il-madaniyya* ignorance is the enemy of civilization. **2** youthfulness.

جاهل *gaahil* /pl *gahala, guhala, guhhaal, guhhal*/ **1** /n/ ignorant and foolish person. *min naṣaḥ gaahil ʕadaa [prov]* give advice to someone ignorant and you will only make an enemy of him. *ʔig-gaahil ʕadiww[i] nafs-u [prov]* the ignorant is his own enemy. **2** /adj/ **2a** ignorant. **2b** young, youthful. *ʕabil-ni gadaʕ gaahil sinn-u ma-yzid-ʃ[i] ʕala ʕifriin sana* a young lad met me who wasn't more than twenty years old.

جاهلي *gaahili* /adj/ pagan, pre-Islamic. *ʔil-ʕaṣr il-gaahili* pre-Islamic period.

الجاهليّة *ʔil-gaahiliyya↑* /n/ the pre-Islamic era.

مجهول *maghuul* **1** /adj */ unknown, anonymous. *ʔil-gundi l-maghuul* the Unknown Soldier. **2** /n pl *magahiil/ [math]* unknown, unknown quantity.

أجهل *ʔaghal* /el/ **1** more/most ignorant, more/most foolish. *ʔaghal min daabba* ≈ dumber than an ox. **2** more/most youthful.

جهول *gahuul* /adj */ ignominious.

مجاهل *magaahil* /pl n/ unknown regions. *magaahil ʔifriqya* darkest Africa.

جهّل *gahhil* /vt/ to accuse (s.o.) of ignorance. - vn *taghiil*; ava *migahhil*.

اتجاهل *ʔitgaahil* or *ʔiggaahil* /vt/ to ignore. *ʔil-mudiir bi-yitgaahil il-muwazẓafiin bituuʕ-u* the boss ignores his employees. - ava *mitgaahil*.

استجهل *ʔistaghil* /vt/ **1** to consider ignorant or stupid. *ʔinta b-tistaghil-ni w-ʔana ʔaʕraf ʔaktar minnak* do you consider me ignorant when I know more than you do? **2** to select for ignorance. *ʔistaghil-lak waaḥid wi-faṛṛal-u mʕaak* choose a stupid fellow to work with you. - vn *ʔistighaal*; ava *mistaghil*.

ج ه م

جهامة *gahaama* /n/ grim look. *ziiḥ il-gahaama lli ʕala wiff-ak* take that scowl off your face!

جهّم *gahhim (i)* /vi/ to frown, scowl. *dayman yigahhim fi-wiff in-naas* he's always scowling at people. - vn *taghiim*; ava *migahhim*.

تجهيمة *taghiima* /inst n, pl *-aat*/ a scowl, a frown. *ʕalee ḥittit diin taghiima* what a scowl he has!

ج ه ن ن م

جهنّم *gahannam, guhannam* /fem n/ hell. *ʔin-nahar-da gahannam* today is very hot. *gahannam gooz-i wala gannit ʔabuu-ya [prov]* (better the hell of my husband than the paradise of my father) better suffer as a wife than be a spinster in comfort. ‖ *ḥagar gahannam* silver nitrate.

جهنّمي *gahannami, guhannami* /adj/ devilish, diabolical. *fikra gahannamiyya* one hell of a good idea.

جهنّميّة *gahannamiyya* (also *gahannamiyya ʃokiyya*) /n/ bougainvillea.

ج ه و ر[1]

جهور *gahwar* **1** /vt/ to deepen and widen, cause to grow deeper and wider. *ʔil-midda gahwarit il-garḥ* pus deepened and widened the wound. **2** /vi/ to grow deeper and wider. - vn *gahwara*; ava/pva *migahwar*.

اتجهور *ʔitgahwar* or *ʔiggahwar* /vi/ to be made deeper and wider. - iva *mitgahwar*.

ج ه و ر[2] see ج ه و ر[1]: *gahwari*

ج و ا ش

جواش *guwaaʃ* <Fr> /n/ gouache pigment.

ج و ا ف

جوافة *gawaafa* /coll n, pl *-aat*/ **1** guava tree(s). **2** guava fruit(s).

جوافاية *gawafaaya* /unit n/ **1** a guava tree. **2** a guava fruit.

ج و ا ن

جوان *juwaan* <Fr *joint*> /n pl *-aat*/ seal, gasket.

ج و ب[1]

جواب *gawaab* /n pl *ʔagwiba*/ **1** answer, reply. ‖ *suʔaal wi-gawaab* (a question and an answer) ≈ briefly. — /pl

gawabaat/ **2** letter. *gawaab tawṣiyya* letter of recommendation. ‖*yitɛirif ig-gawaab min ɛinwaan-u [prov]* ≈ you can tell a book from its cover. **3** *[mus]* **3a** octave (to a given tone). **3b** middle register of the *ɛuud*. *gawaab ig-gawaab* the highest register of the *ɛuud*.

جاوب *gaawib* /vt and vi/ to answer, respond to. *ma-ṭgaawib (ɛala) suʃaal-i* well, answer my question! -vn *migawba*; ava *migaawib*.

اتجاوب *ʃitgaawib* or *ʃiggaawib* /vi/ **1** to be answered (of a question). **2** to be responsive. *ʃitgaawib maɛaaya* he went along with me. -ava/iva *mitgaawib*.

أجاب *ʃagaabˀ* **1** /vi/ to answer, respond. **2** /vt/ to fulfil (a wish). *ʃana ʃagabtˀ ṭalab-ak* I did what you wanted. *ʃiʃ-ʃeex da daɛwit-u mugaaba* this man's prayers are (always) answered. -vn *ʃigaaba*; ava *mugiib*; pva *mugaab*.

إجابة *ʃigaaba* /n pl *-aat, ʃagwiba/* answer. *waraqit ʃigaaba* answer sheet.

استجوب *ʃistagwib* /vt/ to cross-examine. -vn *ʃistigwaab*; ava *mistagwib*.

استجاب *ʃistagaabˀ* **1** /vi/ to respond, react. *ʃiṭ-ṭalaba ma-b-yistagibuu-ʃ* the students don't respond. **2** /vt and vi/ to answer a prayer (of God). *rabb-i-na stagaab (li-daɛwit-i)* Our Lord answered my prayer. -vn *ʃistigaaba*; ava *mistigiib, mustagiib*.

استجابه *ʃistigaaba* /inst n, pl *-aat/* a response, a reaction.

مستجاب *mustagaab* /adj/ fulfilled, answered. *daɛit-lu daɛwa mustagaaba* she prayed a prayer for him and it was answered.

[2] ج و ب see و ج ب : *ʃigaabi, ʃigabiyya*

ج و ح

اجتاح *ʃigtaaḥ* /vt/ to cover completely, spread over. *ʃil-ʃanfilwanza gtaaḥit il-balad* influenza spread throqugh the town. -vn *ʃigtiyaaḥ*; ava *migtaaḥ*; pva *mugtaaḥ*.

ج و خ

جوخ *guux* or *goox* <T *çuḥa* from P> /n pl *ʃagwaax/* baize. ‖*guux ʃimbiryaal* best quality *guux*. *-mashˀ il-guux* flattery, toadying, buttering-up.

جوخة *guuxa* or *gooxa* /unit n, pl *-aat/* piece of baize. ‖*ʃabu guuxa w-ʃabu falla fil-qabrˀ b-yiddalla [prov]* both the rich man and the poor man are lowered (finally) into the grave.

ج و د

جاد *gaad (u)* /vi/ to behave generously or openhandedly. *bi-yguud ɛan-naas bi-kull illi ḥilt-u* he gives all he has to help people. ‖*gaadu b-ʃarwaḥ-hum* they sacrificed themselves. -vn *guud*; ava *gaayid*.

جود *guud* /n/ generosity. *ʃil-guud min il-mawguud [prov]* generosity is to give of what is available.

جودة *guuda* /n/ **1** charity, alms. *naas ʃahlˀ guuda wi-karam* charitable and hospitable people. **2** (good) quality, excellence. *yitwaqqaf ɛaleeha guudit il-maḥṣuul* the quality of the crop depends on it. ‖*wig-guuda* response to the mentioning by someone of his home town, as in *ḥaḍrit-ak mineen. - min ʃasyuuṭ. - wig-guuda* 'Where are you from?' 'From Assiut.' 'Exc٬ ılent people!'

جيّد *gayyid* /adj */ **1** good, excellent. *fi-ṣiḥḥa gayyida* in good health. **2** *[acad]* above average, good. *xadt il-lisansˀ b-taqdiir gayyid* I got my B.A. with the ranking Good (between Satisfactory and Very Good).

أجواد *ʃagwaad* /pl n/ noble and generous people. *muʃ kull-u-hum ʃagwaad zayyˀ ma-nta faakir* not all of them are (as) noble and generous as you believe.

أجاود *ʃagaawid* = *ʃagwaad*.

أجاويد *ʃagawiid* = *ʃagwaad*.

أجود *ʃagwad* /el/ **1** more/most generous. **2** better/best.

جوّاد *gawwaad* /n/ Most Beneficent One (epithet of God).

جوّد *gawwid* /vt and vi/ **1** to do (s.th.) well. *ma-ḥaddᵃ ɛaad bi-ygawwid fiṣ-ṣanɛa zayyˀ zamaan* no one (nowadays) makes things as well as they used to be made. **2** to recite the Koran according to traditional principles. -vn *tagwiid*; ava *migawwid*.

تجويد *tagwiid* /n/ art of reciting the Koran (in accordance with certain rules of pronunciation and intonation).

اتجوّد *ʃitgawwid* or *ʃiggawwid* /vi/ to be recited according to traditional principles (of the Koran). *muʃ kifaaya ḥifẓ il-qurʃaan laazim yitgawwid* it isn't sufficient to learn the Koran by heart; it should be correctly recited according to traditional principles. -iva *mitgawwid*.

أجاد *ʃagaadˀ* /vt/ to be highly proficient in, excel in. *bi-yugiid il-ʃingiliizi* he knows English well. -vn *ʃigaada*; ava *mugiid*.

استجود *ʃistagwid* /vt/ to select for superior quality. -vn *ʃistigwaad*; ava *mistagwid*.

[1] ج و ر

جار *gaarˀ (i)* /vt/ to come to the rescue. *lamma tgawwizt ˀ rabb-i-na gar-ni min il-beet il-wiḥiʃ da* when I got married God saved me from this terrible house. -vn *giira*; ava *gaayir*.

جيرة *giira* /n/ **1** being near to, living in the neighbour-

hood of. *girit-hum wiḩʃa* living as their neighbours is not nice. **2** realm of responsibility. *ʕana (wqiɛt^{i}) f-girt-ak* I throw myself on your mercy! — /pl *ʕagwaar/* **3** locality, district. *ʕil-beet fi-giira miʃ baṭṭaala laakin ɋadiim fiwayya* the house is in a reasonable neighbourhood but is a bit old.

جار *gaar*^{2} **1** /n pl *giraan/* neighbour. *ʕiʃtiri l-gaar ɋabl id-daar [prov]* (buy the neighbour before the house) choose where you live for the neighbours, not the house. *ṣabaaḩ il-xeer ya gaar-i - ʕinta fi-daar-ak w-ana f-daar-i [prov]* ≈ neighbourliness lies in courtesy, not intimacy. ‖*saabiɛ gaar* the remotest neighbour, as in *ʕin-nabi waṣṣa ɛala saabiɛ gaar [prov]* the Prophet (Muhammad) preached the love of (even) the remotest neighbour. **2** /prep/ next to. *gaar il-baab* beside the door. *ɋaɛɛad-u gaarak* sit him down beside you.

جارة *gaara*^{2} /n pl *-aat/* woman neighbour. *ʕik-kalaam liiki ya gaara* (these) words are for you, neighbour (said of talk addressed to one person but intended to be overheard by another).

جوار *giwaar, guwaar*↑ **1** /prep/ next to, in the vicinity of. **2** /n/: *ḩusn il-guwaar* good-neighbourliness. *ḩaɋɋ il-giwaar* rights and duties of neighbourliness (i.e. good neighbourliness, hospitality, protection etc.).

جوارة *guwaara*↓ /n/ nearness, closeness. *ʕana farḩaan bi-guwart-ak* I'm overjoyed at having you near me.

انجار *ʕingaar* /vi/ to be given assistance out of a nasty situation, be rescued. - iva *mingaar.*

جاور *gaawir* /vt/ **1** to be a neighbour to, live next door to or in the vicinity of. *gaawir ɛamm-i* he lived next to my uncle. *min gaawir il-ḩaddaad yitḩiriɋ bi-naar-u [prov]* he who sits next to a blacksmith gets scorched by his fire. **2** to associate with. *min gaawir il-ɋoom ʕarbiɛiin yoom baɋa minhum [prov]* if you mix with people for forty days you become one of them. — /vi/ **3** to make one's abode in the vicinity of a holy place (notably el-Azhar mosque in Cairo, or Mecca or Medina). - vn *migawra*; ava *migaawir.*

مجاور *migaawir* /n */ **1** student or disciple residing in the vicinity of his *jeex.* **2** student boarding at el-Azhar. — *ʕil-migawriin* /prop n/ **3** quarter adjacent to el-Azhar.

أجار *ʕagaar*↑ /vi/ to give aid. ‖ *ʕagaar-ak allaah* God protect you from such things! may you never see the like! as in *ʃakl-a-ha ʕagaar-ak allaah* may you never have to see anyone as ugly as she is! *ʕiṣ-ṣudaaɛ ʕagaar-ak allaah ḩa-yiflaɋ raas-i* I've got a splitting headache - may you never have one like it! - vn *ʕigaara*; ava *migiir.*

مجير *mugiir* /n/ protector (especially as a name of God). ‖*ya mugiir* God save us! as in *wid-dinya naṭṭarit ya mugiir* the rain was so heavy, Lord preserve us!

اتجاور *ʕitgaawir* or *ʕiggaawir* /vi/ to be neighbours, live next door to or in the vicinity of. - ava *mitgaawir.*

استجار *ʕistagaar* /vi/ to appeal for help. *b-astagiir bi-llaah minnak* God help me against you! - vn *ʕistigaara*; ava *mistagiir, mustagiir.*

ج و ر^{2}

جار *gaar*^{3} *(u)* /vi/ **1** to go too far, encroach. *bi-yɋuul ʕinni gurt*^{a} *ɛala ʕarḍ-u* he says I annexed some of his land unlawfully. *ʕis-sikkiina gaarit fid-dibiiḩa* the knife cut too deeply into the animal. **2** to commit an outrage, do wrong. *ʕil-gaar gaar wi-law gaar [prov]* your neighbour is your neighbour, even if he acts wrongly. *ʕin gaar ɛaleek gaar-ak ḩawwil baab daar-ak [prov]* if your neighbour wrongs you, move house. *qawaniin gayra* tyrannical laws. - vn *goor*; ava *gaayir.*

جورة *goora* /n pl *-aat/* **1** instance noun of *goor.* **2** /pl also *giwar, guwar/* ditch, hole, pit, indentation.

انجار *ʕingaar* /vi/ (impersonal) passive of *gaar. ma-yṣaḩḩ*^{i}*-ʃ yingaar ɛalee kida* it is not right that he should be wronged in this way. - iva *mingaar.*

ج و ز^{1}

جاز *gaaz*^{2} *(u)* /vi/ **1** to be fitting, be correct. *ʕik-kalam-da ma-yguz-ʃ*^{i} *minnak* you shouldn't say things like that! **2** /impers/ it was permitted, it was allowed. *ʕir-raagil yiguz-lu ʕarbaɛ sittaat* a man is permitted four wives. - vn *gawaaz*; ava *gaayiz.*

¶ *gaaz ɛala* to take (s.o.) in, deceive. *gaazit ɛaleehum il-ʕawanṭa* the trick worked on them. *yaama gaaz ɛannaas* a lot of tricks have been played on people before!

يجوز *yaguuz* /vi/ modal signalling possibility. *yaguuz ʕinnaha miʃ ḩa-tiigi* she may not come. *min il-gaayiz* it is possible. *gaayiz ma-ɛagabituu-ʃ* maybe he didn't like her. *ḩa-tiigi bukra. - gaayiz* 'Will you come tomorrow?' 'Perhaps.' - ava *gaayiz.*

جواز *gawaaz*^{1} /n pl *-aat/* pass, permit. *gawaaz safar* passport. *gawaaz muruur* permit to pass.

جائزة *gayza* /n pl *gawaayiz/* prize, award.

إجازة *ʕagaaza, ʕigaaza*↑ /n pl *-aat/* **1** holiday, leave. *huwwa n-nahar-da miʃ ʕagazt-ak* today isn't your day off. *ʕagaaza maraḍiyya* sick leave. **2**↑ certificate, degree. *xad ʕigaazit id-dukturaah* he obtained his doctorate. see further under ² ج ز.

جاوز *gaawiz* /vt/ to exceed. *gawzit ḩudud-ha* she overstepped the mark, she went too far. - vn *migawza*; ava *migaawiz.*

اتجاوز ʃitgaawiz or ʃiggaawiz **1** /vt and vi/ to disregard. *ʃil-furuuq it-ṭafiifa di b-nitgawiz-ha* these trifling differences we ignore. *ʃatɛaʃʃim ʃinnak titgaawiz ɛan suuʃ taṣarruf-u* I hope you will overlook his misbehaviour. **2**↑ /vt/ to exceed, be in excess of. *ʃil-birovaat ma-titgawiz-ʃ' ʃusbuuɛ* the tests do not take more than a week. - ava *mitgaawiz*.

ج و ز [2] see also ز و ج

جوز *gawaz (i)* /vt/ to make double. *ʃigwiz il-ḥabl* make the rope double! - vn *gawazaan*; ava *gaawiz*; pva *magwuuz*.

جوز *gooz*[1] /n pl *ʃagwaaz, gizaan*/ **1** husband. — /pl *ʃagwaaz, giwaaz*/ **2** pair. *gooz ḥamaam* a brace of pigeons. *big-gooz* in pairs. *liɛbit gooz walla fard* the game of 'odd or even'. **3** front pair of teeth (of a ruminant). *kasar gooz [rur]* to lose two (front) teeth (of an animal).

¶ *ʃagwaazan: ʃagwaazan wi-ʃafraadan* to an extreme degree, as in *ʃakal il-ɛalqa ʃagwaazan wi-ʃafraadan* he got a terrible beating.

الجوزاء *ʃil-gawzaaʃ* /n/ *[astrol]* Gemini.

جيزة *giiza* /n/ marrying, marriage. *giizit il-banaat mutɛiba* getting one's daughters married is tiresome.

جواز *gawaaz*[2] /n/ marriage. *ɋasiimit gawaaz* marriage certificate. *gawaaz ɛala ḥubb* a love-match. *ʃig-gawaaz sutra [prov]* marriage is protection (advice to girls). *ʃig-gawaaz nuṣṣ' id-diin* to marry is (to assure oneself of fulfilling) half of one's religion.

جوازة *gawaaza* /pl *-aat*/ a marriage. *di kaanit gawaazit ʃeeh* what kind of a marriage was this! ‖*gawaazit naṣaara* an unbreakable relationship. - *ʃimʃi f-ganaaza wala timʃi f-gawaaza [prov]* better escort a funeral than involve yourself in marriage negotiations (as the results of the latter may be more distressing than the former).

جوّازى *gawwaazi* /adj invar/ *[rur]* drawn or worked by a pair of animals. *saɋya gawwaazi* water-wheel turned by two animals (opposite each other).

مجوز *migwiz* /adj invar/ **1** double(d), paired. *fii mifrid wi-fii migwiz* there is single and there is double. *ɛuɋdit watad migwiz* double clove-hitch. *silk' migwiz* double wire. **2** even (of a number).

اتجوز *ʃitgawaz* or *ʃiggawaz* /vi/ to be made double. - iva *mitgiwiz*.

جوّز *gawwiz* /vt/ to effect the marriage of (s.o.) (to). *gawwizuu-ni ḥumaar* they married me to an ass. ‖*gawwizu mifkaaḥ li-riima - ma ɛala l-itneen ɋiima [prov]* ≈ these nobodies deserve each other! - ava/pva *migawwiz*.

اتجوّز *ʃitgawwiz* or *ʃiggawwiz* **1** /vt/ to marry, wed. *ʃitgawwizit duktoor* she married a doctor. **2** /vi/ to get married. *mif ɛaayiz yitgawwiz ʃabadan* he doesn't ever want to get married. - ava *mitgawwiz*.

¶ *ʃitgawwiz ɛalee(ha)* he married another wife in addition to (her).

ج و ز [3]

جوز *gooz*[2] /coll n/ walnut(s), walnut tree(s). ‖*gooz it-ṭiib* nutmeg(s). - *gooz hind* coconut(s).

جوزة *gooza* /n/ **1** /unit n, pl *-aat*/ a walnut. ‖*goozit ir-raɋaba* Adam's apple. **2** /pl *giwaz*/ type of hand-held water-pipe with a water-holder made out of a coconut or substitute (e.g., a jam jar) and a cane stem (see Pl.I, 7). **3** perforated mug used in the making of *kunaafa*.

جوزاية *gozaaya* /unit n/ a walnut.

جوزيّة *goziyya* /n/ confection of syrup and coconut.

ج و ط see ج و ى ط: *gawiiṭ*

ج و ع

جاع *gaaɛ (u)* /vi/ to become hungry. *yixaaf yifuxx' la-yguuɛ* he's afraid to excrete lest he hunger (said of a miser). *ʃil-firaan tudxul beet-u tguuɛ* rats (which) enter his house starve. - vn *guuɛ*; ava *gaɛaan, gaayiɛ*.

جوع *guuɛ* /n/ hunger. *ʃig-guuɛ kaafir [prov]* ≈ hunger can drive one to do anything.

جوعة *guuɛa* /pl *-aat*/ instance noun of *guuɛ*. ‖*ʃabaɛa baɛd' guuɛa* see *ʃabaɛa*.

جعان، جوعان *gaɛaan* /adj * and pl *gawaaɛa*/ hungry. *ʃig-gaɛaan yiḥlam bi-suuq il-ɛeef [prov]* (the hungry man dreams of the bread market) one's aspirations are determined by one's needs. *ʃig-gaɛaan yiɋarɋaf iz-zalaṭ* (a hungry man will chew gravel) need forces one to accept what one would normally despise. *fuut ɛala ɛadiww-ak gaɛaan wala tfut-ʃ' ɛalee ɛiryaan [prov]* (pass by your enemy hungry, since he will not detect your hardship, but not naked, since that would betray your need) shame and weakness lie not in poverty but in exposing oneself to accusations of indecency.

أجوع *ʃagwaɛ* /el/ more/most hungry. ‖*dool ʃagwaɛ naas* they are the meanest people you can imagine.

مجاعة *magaaɛa* /n pl *-aat*/ famine.

جوّع *gawwaɛ* /vt/ to make hungry. *riiḥit il-ʃakl' gawwaɛit-ni* the smell of the food made me hungry. *da mgawwaɛ ɛiyaal-u* he does not give his children enough to eat. - vn *tagwiiɛ*; ava *migawwaɛ*.

اتجوّع *ʃitgawwaɛ* or *ʃiggawwaɛ* /vi/ to be made hungry. - iva *mitgawwaɛ*.

استجوع *ʃistagwaɛ* /vt/ to consider hungry. *laazim istagwaɛuu-k lamma-dduu-lak il-ʃakl* they must have

thought you were hungry since they gave you food. - vn *ʕistigwaaɛ*; ava *mistagwaɛ*.

ج و ف ¹

جوف *goof* /n/ inside, interior. *goof il-ɢizaaza* the inside of the bottle. *goof il-ʕarḍ* the interior of the Earth. *fii ḥaraɢaan fi-goof-i* there's a burning in my stomach.

جوفي *gawfi* /adj/ subterranean. *miyaah gawfiyya* subterranean water.

أجوف *ʕagwaf* /adj, fem *gawfaaʕ*, pl *guuf*/ hollow, concave. ‖*dayman kalaam-u ʕagwaf* he always talks nonsense.

جوّف *gawwif* /vt/ **1** to hollow out, make concave. **2** to gut. - vn *tagwiif*; ava/pva *migawwif*.

تجويفة *tagwiifa* /n pl *tagawiif, tagwifaat*/ cavity, hollow. *tagwiifit il-ʕiid* the hollow of the hand.

اتجوّف *ʕitgawwif* or *ʕiggawwif* /vi/ **1** to be hollowed, be made concave. **2** to be gutted. - iva *mitgawwif*.

ج و ف ² see ج و ا ف : *gawaafa, gawafaaya*

ج و ق

جوق *gooq* = *gooɢa*.

جوقة *gooɢa* /n pl *-aat*/ **1** musical band, musical troupe. *gooɢit zaar* a troupe performing at the *zaar*. **2** theatrical group. **3** crowd, gathering, group. ‖*ga wi-mɛaa g-gooɢa btaɛt-u* he came and brought his clique with him.

ج و ل ¹

جال *gaal (u)* /vi/ to move around, go about. *ʕil-bayyaaɛa l-gayliin* street hawkers. *ʕeeh illi yguul fi-xaṭr-ak* what's going on in your mind? ‖*yiṣuul wi-yguul* he hangs around with people (especially women). - vn *gawalaan*; ava *gaayil*.

جولة *gawla, goola* /n pl *-aat*/ **1** round (in boxing, wrestling etc.). **2** tour. *gawla ntixabiyya* election tour.

جوّال *gawwaal* /n pl *gawwaala*/ Senior Scout, Rover.

مجال *magaal* /n pl *-aat*/ **1** sphere of activity. *fi-magaal it-taɛliim* in the field of education. **2** scope (for activity), range. *ma-fii-ʃ magaal lil-liɛb* there's no scope for mucking about. *magaal maɣnaṭiisi* magnetic field.

اتجوّل *ʕitgawwil* or *ʕiggawwil* /vi/ to go around, move from place to place. *ḥaẓr it-tagawwul* curfew. *bayyaaɛ mutagawwil* street hawker. - vn *tagawwul*; ava *mutagawwil*.

ج و ل ²

جول *goolˁ* <Engl> /n/ *[soccer]* **1** goal (the physical structure). **2** goal (the scored point). **3** (also *gool kiibar*) goal-keeper. - also *goon*.

ج و ن ¹

جون *goon* <Engl> /n pl *ʕigwaan, giwaan/ [soccer]* **1** goal (the physical structure). **2** goal (the scored point). **3** goal-keeper. - also *goolˁ*.

ج و ن ² see also **ج و و ²**

جوّن *gawwin* **1** /vt/ to cause to go deep or far (into s.th). *gawwin il-musmaar fi-ɢalb il-ḥeeṭa* he drove the nail deep into the wall. **2** /vi/ to go deep or far (into s.th). *ma-tgawwin-fˁ bɛiid fil-mayya ʕaḥsan hinaak ɣawiiṭ* don't swim too far; it is deep out there. - vn *tagwiin*; ava *migawwin*.

اتجوّن *ʕitgawwin* or *ʕiggawwin* /vi/ **1** to go deep or far (into s.th.). *ʕitgawwinu fiṣ-ṣaḥra l-ḥaddˁ ma taahu* they went so far out into the desert that they got lost. **2** to be made to go deep or far (into s.th.). - ava/iva *mitgawwin*.

ج و ن ³ see ج و ا ن : *guwaan*

ج و ن ت ي

جونتي *guwanti, gawanti* <It *guanti*> /n pl *-aat*/ pair of gloves. *fardit guwanti* a (single) glove. *maskiin goz-ha mɛaaha zayy ig-guwanti - ma-tilbis-uu-ʃ illa-mma tḥissˁ bil-bard* ≈ poor husband! she only remembers him when she needs money.

ج و ه ر

جوهر *gawharˁ* /n/ essence, crux. *gawhar il-mawḍuuɛ* the crux of the matter.

جوهري *gawhariˁ* /adj/ essential. *ɛunṣur gawhari* an essential factor.

جوهرة *gohara* /n pl *gawaahir*/ **1** jewel, gem. ‖*ʕig-gohara l-maṣuuna* (the well-kept jewel) the wife. *- gawaahir ya ɛinab [vendor's cry]* grapes like jewels! **2** eye of an animal (food).

جواهرجي *gawahirgi* /n pl *-yya*/ jeweler.

مجوهر *mugoohar* /adj/ hard and shining.

مجوهرات *migawharaat* /pl n/ jewels, jewelry.

مجوهراتي *migawharaati* /n pl *-yya*/ jeweler.

ج و و ¹

جوّ *gaww* /n/ **1** air, atmosphere. *ɛayziin niɣayyar gaww* we want to get a change of air. ‖*raaḥ fil-gaww* it disappeared entirely. **2** weather, climate. *ʕig-gawwˁ laṭiif in-nahar-da* the weather is pleasant today. — /pl *ʕagwaaʕ*/ **3** atmosphere, mood. *gawwˁ ɛilmi* an academic atmosphere. *gawwˁ ʃaaɛiri* a poetic atmos-

phere. *ʕaʃaan yiʕmil gaww' mnaasib* in order to create a suitable atmosphere. ‖*huwwa ʕaamil li-nafs-u gaww* he has created an aura for himself. - *kal ig-gaww* he stole the limelight. - *ʃil-waaḥid laazim yitmaʃʃa maʕa l-gaww* ≈ one must bend with the wind. **4** girlfriend, boyfriend. *hiyya di g-gaww' btaaʕ-i* that is my girlfriend.

جوّى *gawwi* /adj */ pertaining to air, atmospheric. *bariid gawwi* airmail. *ɣaara gawwiyya* air raid. *ʃiḍ-ḍaɣṭ ig-gawwi* atmospheric pressure. *ʃis-silaaḥ il-gawwi* the Air Force

ج و و ²

جوّه، جوّا *guwwa* **1** /prep, w pron suff *guwwaa-*/ inside. *guwwa l-beet* inside the house. *ʃil-xażna guwwaaha l-filuus* the safe has the money inside it. **2** /adv/ inside. *ṭiliʕna min guwwa* we emerged from inside. *ʃimsaḥ-u guwwa w-barra* clean it inside and out.

جوّانى *guwwaani* /adj */ inner, internal. *kawitʃ' guwwaani* inner tube. *ʃil-maṣuura g-guwwaniyya* the inside pipe. see further under ج و ن ²

ج و ى ط

جويط *gawiiṭ* <T *civata*> /n pl *gawaayiṭ*/ peg.

ج ى

جا، جه *ga, gih (yiigi)* /vt and vi/ **1** to come (to), arrive (at). *lissa ma-gaa-ʃ* he hasn't come yet. *ma-tguu-ʃ ʃilla biiha* don't come without her! *zaman-ha gayya* she'll be here any minute now. *ʃis-sana g-gayya* next year. *ga badri* he came early. *gat waxri* she came late. *gum fil-maʕaad* they came at the appointed time. *bi-ygii-li* (or *bi-ygii-ni) kull' yoom* he comes to me every day. *bi-yiigi ʕala ʃ-ʃakl' da* it comes in this form. *ʃawwil ma gaa-li* (or *gaa-ni) l-ʕaya* when I first got ill. *gat-lu* (or *gat-u) n-nooba* he had a seizure. *mirwaaḥ wi-mgiyy* going and coming. ‖*zayy' ma tiigi tiigi* come what may. - *raaḥit il-ʃayyaam wi-gat il-ʃayyaam* time passed. - *gat-ak* (or *ga-k) dahya* may a calamity befall you! go to hell! - *ya gat ya raaḥit* it's a matter of luck. - *la raaḥ wala ga* (1) to be without experience, as in *da ʕayyil ʂuɣayyar la raaḥ wala ga* he is just a little boy still wet behind the ears. (2) to be trivial or insignificant, as in *dool itneen gineeh la raaḥu wala gum* it is only a matter of two pounds, nothing to speak about. - *lissa gayy-i-lak fil-kalaam* I'm coming to that now. - *ʃiṭ-ṭalqa ma-gat-ʃ' fiiha* the shot missed it. - *ʃagi-lha ʃmaal - tigii-li ymiin* she and I are always at loggerheads with one another. - *ʃinta gayy* are you in (this round of the game)? are you playing? **2** to happen to be, turn out to be. *ʃil-faraḥ ga (f-)yoom il-xamiis* the wedding fell on Thursday. *ʃil-ḥamdu li-llaah - gat saliima* thank God! it turned out all right. **3** to be in accord (with), be comparable (with). *ʃufna beet yiigi zayy' bet-na* we saw a house comparable with our house. *ʃinta ma-tgii-ʃ ḥittà minni* you aren't a patch on me! *ʕarabiyya xurda zayy' di tiigi feen gamb il-marseedis* how could a rattletrap like this be compared with a Mercedes! *huwwa ma-ygii-ʃ fi-ḍufr-i* he's not worth my finger nail! *loon yiigi ʕala wiʃʃ-i* a colour that suits my face. *ʃil-fustaan ga ʕaleeki* (1) the dress suited you. (2) the dress fitted you. *ʃig-gazma di ma-tgii-ʃ (ʕala) ḳadd-i* these shoes won't fit me. ‖*wi-di tiigi* can that really be right? - *yiigi* ... approximately, as in *yiigi kiilu laḥma* about a kilo of meat, *ḳaʕadt' yiigi nuṩṩ' saaʕa* I sat for about half an hour. - *hawa... gayy[a] ʕala hawa...* ≈ the two are perfectly compatible, as in *di bint' laṭiifa ḳawi - hawaa-ha gayy[a] ʕala hawaa-ya* she's a very nice girl; we hit it off together perfectly. – /pre-verb/ **4** to up and (do s.th.), make a move to (do s.th.). *ga yimsik is-samaka giryit* he was about to grab the fish when it darted away. *kull' ma ʃaagi ʃastaḥamma m-alaḳii-ʃ mayya* every time I come to take a bath I find there's no water. *ʃawwil ma ʃuft-u geet maasik fii* as soon as I saw him, I went and grabbed him. *ga xabṭ-u ḳalam* he upped and slapped him. - vn *migiyy*; ava *gayy, gaay*.

¶ *ga ʕala* to go against (s.o.), especially for reasons of policy rather than conviction. *lamma yiḥṩal xinaaḳa fil-ʕeela dayman bi-yiigi ʕala mṛaat-u* whenever there is a quarrel in the family he makes his wife give in (for the sake of peace). *ʕaʃaan il-ʕiʃra ḥ-aagi ʕala nafs-i w-ʃaṣalḥ-u ʃana* for the sake of our friendship I'll climb down and make things up with him.

مجيّة، مجيئة *migiyya* /inst n, pl *-aat*/ a coming.

جيّة *gayya* /inst n, pl *-aat*/ a coming. *gih gayyit xeer* he came bringing good fortune with him.

ج ى ب ¹

جاب *gaab (i)* /vt/ **1** to bring, fetch. *bi-tgiib il-ʃawlaad min il-madrasa* she fetches the children from school. *gaabit raagil yirakkib laha n-nuur* she brought in a man to install the electricity for her. *mumkin ʃagiib il-ʕarabiyya wara* may I back up the car? ‖*gaab-u l-ʃarḳ* (1) he threw him to the ground. (2) he destroyed his future, career etc. - *gaab xabar-u* he put an end to him. - *rabb-i-na ygiib taʕab-ak bi-fayda* may the Lord reward your efforts! - *ʃeeʃ gaab li-gaab* how can there be any comparison (between these two things)? - *maʕrift-u tgiib wara* to know him is a disadvantage. - *tiʕiif wi-tgib-li [women]* (expression of gratitude for a gift) ≈ may

you live long and continue to provide for me! -*ɋadd is-simsima wi-tgiib il-xeel milaggima.* - *kilma* (a riddle) ≈ (what is) the size of a sesame seed and can draw up an army? -a word. **2** to produce, yield, bring forth. *ʃil-ɛimaara bi-tigib-lu talatiin gineeh fif-ʃahr* the building brings him in thirty pounds a month (in rent). *lissa ma-gabit-f*^{i} *ɛyaal* she hasn't had any children yet. *bi-ygiib damm*^{i} *min manaxiir-u* he has a nosebleed. *miin gaab ig-goon* who scored the goal? *ɛaawiz ʃagiib ʃaktar min tisɛiin fil-miyya fil-imtiḥaan* I want to get more than ninety percent in the exam. *ɛawziin bass*^{i} *ngiib ḥaqq-u* (we don't care about profit,) we just want to realize its cost. ‖*gaab illi f-baṭn-u* (1) he vomited. (2) he confessed all. -*gaab ɛala nafs-u* he ejaculated. -*gab-ha ɛala balaaṭa* he spoke frankly, he laid his cards on the table. -*gaab fi-sirt-ak* he gossiped about you. -*ʃinta fakir-ni gibt*^{a} *ḥaaga min ɛandi* do you think I made it all up? -*ma-ygib-ha ʃilla rigal-ha* ≈ only those with a special ability can do it (said of, or to, one who succeeds where others fail). **3** to cause, bring on, bring about. *bi-tgiib il-maraḍ* it causes illness. *gibt-u l-nafs-ak* you brought it upon yourself. *gibt*^{i} *lit-tuggaar il-kafya* I brought disaster on the merchants. **4** to reach, arrive, get as far as. *mafruuḍ nigiib il-barr it-taani baɛd*^{i} *nuṣṣ*^{i} *saaɛa* we should reach the other shore in half an hour. *zaɛɋit il-marakbi gaabit il-barr* the boatman's cry reached the shore. -vn *gayabaan*; ava *gaayib*.

مجابة *magaaba* /n pl *magaayib*/ act of bringing. *yaama gab laha magaayib ma-lhaa-ʃ ɛadad* he brought her innumerable gifts.

اتجاب *ʃitgaab* or *ʃiggaab* /vi/ passive of *gaab*. -iva *mitgaab*.

انجاب *ʃingaab* = *ʃitgaab*. -iva *mingaab*.

ج ى ب (2)

جيب *geeb* /n pl *giyuub, guyuub*/ **1** pocket. *dafaɛ min geeb-u* he paid out of his own pocket. *huwwa f-geeb-i* I've got him in my pocket, he is at my beck and call. *ʃilli f-geeb-i f-geeb-ak* all I have is yours. ‖*ʃabu geeb maxruuɋ* spendthrift. -*ʃaṣḥaab ig-giyuub it-tiɋiila* the well-off. -*guyuub ʃanfiyya [anat]* sinuses. **2** sine.

جيب *jiib* <Engl>: *ɛarabiyya jiib* /pl *ɛarabiyyaat jiib*/ jeep.

جيبة *jiiba* <Fr *jupe*> /n pl *-aat*/ skirt.

ج ى ح see ج و ح: *ʃigtiyaaḥ*

ج ى د see ج و د: *gayyid*

ج ى ر (1)

جير *giir* /n/ **1** lime. ‖*giir ḥayy*. quick-lime. **2** chalk.

جيرى *giiri* /adj/ calcareous. *ḥagar giiri* limestone. *madda giriyya [dent]* tartar.

جيّارة *gayyaara* /n pl *-aat*/ limekiln.

جيّر *gayyar* **1** /vt/ to render lustreless, give a matt finish to. **2** /vi/ to become lustreless. -vn *tagyiir*; ava/pva *migayyar*.

اتجيّر *ʃitgayyar* or *ʃiggayyar* /vi/ to be (made) lustreless, be given a matt finish. -iva *mitgayyar*.

ج ى ر (2) see ج و ر (1): *giira*

ج ى ز (1)

الجيزة *ʃig-giiza* /prop n/ Guiza, town and province on the west bank of the Nile, the town being considered part of greater Cairo.

جيزاوى *gizaawi* **1** /adj */ Guizan. **2** /n */ a Guizan.

ج ى ز (2) see ج و ز: *giiza*

ج ى ش

جيش *geeʃ* /n pl *giyuuf*/ army.

جيشى *geeʃi* /adj invar/ army, pertaining to an army or armies. *gazma geeʃi* a pair of army boots.

الجيوسى *ʃig-giyuufi* **1** epithet of *seef ʃibn zi yazan* (q.v.). **2** *gaamiɛ ig-giyuufi* the Giyushi Mosque, an old and conspicuous mosque on the Muqattam Hills, built at the instigation of *ʃamiir ig-giyuuf* Badr el-Jamali late in the eleventh century.

ج ى ص

جيص *giiṣ* <Copt> /n pl *ʃigyaaṣ, giyaaṣ*/ (noisy) fart. ‖*giiṣ fi-ɋafaṣ* inconsequential talk or activity.

جيّص *gayyaṣ* /vi/ to fart (with noise). -vn *tagyiiṣ*; ava *migayyaṣ*.

ج ى ف

جيفة *giifa* /n pl *giyaf*/ rotting corpse or carcass.

جيّف *gayyif* /vi/ to become putrid, stink (of a dead body). -ava *migayyif*.

ج ى ل

جيل *giil* /n pl *ʃagyaal*/ generation.

ج ى ل ج

جيولوجيا *jiyulujia* <prob It> /n/ geology.

جيولوجى *jiyulooji* **1** /adj/ geological. **2** /n */ geologist.

(ج ى م)

جيم *giim* /fem n, pl *-aat*/ fifth letter of the Arabic alphabet. ‖*siin wi-giim* questioning, cross-examination, as in *xad-ni f-siin wi-giim* he started questioning me. - *ʕil-ħaala giim* (1) *[obsol]* there is an emergency alert. (2) the (money) situation is very tight.

جيم *geem* <Engl> /n pl *-aat*/ game (in tennis or ping-pong).

ج ى ى و ن

جيّون *gayyuun* <Fr *guillaume*> /n pl *-aat*/ *[carp]* plough plane, rabbet plane.

ح

ح
ح *ħa-* (also *ha-*) /*ħ-* or *h-* before 1st pers sing/ verb prefix with imperfect indicating future action. *ħa-tiigi ʕimta* when will you come? *ʕana ɛaarif ħa-tquul ʕeeh* I know what you're going to say. *kaan ħa-yfuf-ha* he was going to see her.

(ح ا)
حا *ħaa'*, *ħaa'* sound made to urge on a donkey ≈ gee-up! - also *ħarr*.
حا *ħaa*^{2}, *ħaa*^{2} /fem n, pl *ħahaat*/ sixth letter of the Arabic alphabet. - also *ħaaʕ*, *ħah*.

ح ا ء
حاء *ħaaʕ* /fem n, pl *-aat*/ sixth letter of the Arabic alphabet. - also *ħaa*, *ħaa*, *ħah*.

ح ا ب ا see also ح ب ى^{1}
حابا *ħaaba: ħaaba ħaaba (ya rabb*^{i} (or *ya-lli) tgii-ni)* **1** encouragement to a child to crawl or toddle towards one. **2** *[children]* a chant, in ball-catching games, particularly aimed at distracting other catchers ≈ it's coming, it's coming!

ح ا ت ا
حاتا *ħaata: ħaata baata* /invar/ destitute, penniless. *ʕana ħaata baata* ≈ I haven't got a thing to my name.

ح ا ت ى
حاتى *ħaati* /n pl *-yya*/ kebab-seller, kebab restaurateur.

ح ا ج see ح و ج^{1}: *ħaaga*

ح ا د ى^{1}
حادى *ħaadi*^{1}: *ħaadi baadi siid-i mħammad il-baʏdaadi* (or *il-buʏdaadi) ʃaal-u w-ħaʈʈ-u ɛalaa-di* children's counting rhyme ≈ eenie-meenie-mynie-mo etc.

ح ا د ى^{2} see ح د ا ش ر

ح ا ر see ح و ر^{1}: *ħaara*

ح ا ف see ح ف ف: *ħaaf*

ح ا ل see ح و ل: *ħaal, ħaala, ħaali*

ح ا ن ا
حانا *ħaana: ħaana w-baana* or *ħaana w-maana* this and that, one thing and another, as in *been ħaana w-maana qayyaɛna ɛaʃaa-na* (what with this and that we've lost our supper) we've been involved with so many trivialities that we've lost our chance of having what's important, *sabu-haa-lak been ħaana w-baana* they left you completely up in the air about it.

ح ب ا see ح ب ى: *ħaba*

ح ب ب^{1}
حبّ *ħabb*^{i} *(i)* **1** /vt/ to like, love. *bi-tħibb il-musiiqa* do you like music? *b-aħibb il-bint*^{i} *di* I love that girl. *ʕilli yħibb*^{i} *nafs-u tikrah-u n-naas [prov]* who loves himself is hated by others. ‖*ħabb*^{i} *wi-ndabb* he fell madly in love. - *ʕir-rigl*^{i} *tdibb*^{i} *maʈraħ ma tħibb [prov]* ≈ one is guided by one's affections. - *ʕir-rizq*^{i} *yħibb il-xiffiyya [prov]* ≈ you have to look lively to make a living. **2** /preverb/ to like to. *tiħibb*^{i} *tismaɛ-ha* would you like to hear it? — /vt and vi/ **3** to kiss (as a sign of respect). ‖*ħibb*^{a} *(ɛala) raas-u* kiss and make up with him! - *ħabbit-ak il-ɛafya* may good health kiss you! (in response to e.g., *xallet-kum bi-ɛafya* stay in good health.

-*ħabbit-ak ʕuxt-ak* may your spirit-sister kiss you! (used as *ħabbit-ak il-ɣafya*). -*ħabb-ak burʂ* see *burʂ*. -vn *ħubb, maħabba, ħababaan*; ava *ħaabib*; pva *maħbuub*.

حبّ *ħubb* /n/ love, passionate love. ‖*ħubb iz-zaat* selfishness.

محبّة *maħabba* /n/ love. *kull' ʕinsaan miħtaag lil-maħabba* every human being needs to be loved.

محبوب *maħbuub* /n */ **1** beloved. **2** /no pl/ **2a** *[obsol]* gold pound. **2b** *[slang]* a pound note.

حبّ *ħibb* /n pl *ʕaħbaab*/ beloved.

حبّى *ħibbi* /adj/ friendly (of a game). *matʃ' ħibbi* a friendly match.

أحبّ *ʕaħabb*[1] /el/ more/most loved.

حبيب *ħabiib* /n/ **1** /pl *ħabaayib, ʕaħbaab*/ dear one, friend. *ya ħabiib-i* my dear (a common form of address). *ʕil-ɣiyaal ʕaħbaab allaah* children are the loved ones of God. *ʈuul ɣumr il-baladeen ħabaayib* the two countries have always been on good terms. *ʕin kaan ħabiib-ak ɣasal ma-tilħas-uu-ʃ kull-u [prov]* (should your friend be honey, don't lick him all away) ≈ don't abuse the kindness of a friend. *ɋarb il-ħabiib zayy' ʕakl iz-zbiib [prov]* being beaten by a friend is as (good as) eating raisins. ‖*ʕil-ħabiib* the Beloved (epithet of the Prophet Muhammad). **2** /pl *ʕaħibba*/ lover. *ʕil-ʕaħibba tneen itneen* lovers love to walk together (said to tease strolling couples etc.).

حبيبة *ħabiiba* /n pl *-aat, ħabaayib, ʕaħbaab*/ **1** dear woman, female friend. ‖*sitt il-ħabaayib* mother. **2** sweetheart, girlfriend.

حبّوب *ħabbuub* /adj */ likeable, amiable.

حبّيب *ħabbiib* /n pl *ħabbiiba/ [deris]* (inveterate) lover. *ʕayyaam il-madrasa kunt[a] ħabbiib* when I was at school I was always in love. ‖*ʃawaariɣ il-ħabbiiba* the dimly-lit streets favoured by lovers, lovers' lanes.

اتحبّ *ʕitħabb* /vi/ to be loved, be liked. -iva *mitħabb*.

انحبّ *ʕinħabb* = *ʕitħabb*. -iva *minħabb*.

حبّب *ħabbib*[1] /vt/ to cause to feel love or liking. *ʕilli ħabbib-ni fii ʕinnu muxliʂ* what made me like him is his sincerity. -vn *taħbiib*; ava *miħabbib*; pva *muħabbab↑*.

اتحبّب *ʕitħabbib* /vi/ **1** to ingratiate oneself, make up (to s.o.). **2** to be made to like or love. -ava/iva *mitħabbib*.

أحبّ *ʕaħabb*[2]*↑* = *ħabb*[1]. -ava/pva *muħibb*.

محبّ *muħibb* /adj */ loving, kind, benevolent. *raagil muħibb' lin-naas* a man well-disposed to his fellows. ‖*baṣalit il-muħibb' xaruuf [prov]* (an onion eaten with a loving friend is as good as a sheep) ≈ a cheerful look makes a dish a feast.

يستحبّ *yustaħabb* /vi/ to be desirable. *ʕiz-ziyaara ma-tustaħabb'-ʃ saaɣit il-ɤada* visiting is not desirable at lunch time. -iva *mustaħabb*.

ح ب ب[2]

حبّ *ħabb*[2] /coll n, pl *ħubuub*/ **1** seed(s), grain(s). *wi-baɛdeen yigri fii ʕil-laban wi-yimla l-ħabb* then the sap rises and fills the seed. *ħubuub il-liqaaħ* pollen grains. **2** pill(s). *ħubuub manɛ il-ħaml* birth-control pills. **3** pimple(s), papule(s). ‖*ħabb iʃ-ʃabaab* acne. **4** bead(s).

حبّة *ħabba* /unit n, pl *-aat*/ **1** a seed, a grain. ‖*yiɛmil mil-ħabba ɋubba [prov]* ≈ he makes a mountain out of a molehill. -*ħabbit il-ɣeen* pupil of the eye. -*ya ħabbit ɣeen-i* ≈ my poor dear! (expression of affectionate sympathy). -*li-ħabbit ɣeen(-u)* (full) to the brim. **2** a pill. **3** a pimple. **4** a bead. **5** a single specimen (of certain collective nouns). *ħabbit ɋuuʈa* a tomato. — /no pl/ **6** small quantity, smidgen. *bi-nħammar ħabbit ruzz' fis-samna* we brown a little rice in the *samna*. ‖*ħabba (b-)ħabba* little by little. **7** short period of time. *ʕistanna ħabba* wait a bit. *kaanit ʕumm-u twaddii-lu ʕakl' kull[a] ħabba* his mother used to bring him food every so often. *b-albis ɋabl' m-anzil bi-ħabba ʂɤayyariin* (or *ʂuɤayyara*) I get dressed shortly before going out.

¶ *ħabbiteen* /adv/ somewhat, a bit. *huwwa ʈaaliɛ fiiha ħabbiteen* he fancies himself somewhat. *ɋaɛadna ħabbiteen wayyaahum* we stayed with them for a bit.

حبّاية *ħabbaaya* = *ħabba* 1-4.

حبيبة *ħubeeba* /n pl *-aat*/ a grain, a seed.

حبيبى *ħubaybi* /adj/ granular, grainy. ‖*xaʃab ħubaybi* chipboard. -*ramad ħubaybi* trachoma.

حبّب *ħabbib*[2] /vi/ **1** to produce seed. *baɛd' ma yħabbib ik-kuuz yitfattaħ wi-yistiwi* after it has formed its seed the cob opens and ripens. **2** to come out in pimples. *wasaaxit il-muus xallit raɋabt-i tħabbib* the dirtiness of the razor blade made my neck come out in spots. -vn *taħbiib*; ava *miħabbib*.

محبّب *miħabbib* /adj/ grainy, having a grain (of wood, leather, etc.).

ح ب ب ذ ا see ح ب ب ز ا

ح ب ب ز ا

حبّذا *ħabbaʒa↑* /w foll *law* clause/ how nice it is to ..., how much better it would be if .... *(ya) ħabbaza law kaan il-waaħid ɛaarif ism il-ɛamiil wi-yindah-lu bi-sm-u* how much better it is if one knows the customer's name and calls him by it! *(ya) ħabbaza law gibt-i-lna kubbaayit ʃaay* how nice it would be if you brought us a cup of tea!

ح ب ب ه –
حبّهان *ħabbahaan* /coll n/ cardamom.

ح ب ح ب
حبحب *ħabħab* /adj invar/ small, stunted in growth. *baṭṭiix ħabħab* undersized water-melons.

ح ب ر [1]
حبر *ħibr* /n pl *ʕaħbaar*/ ink. ‖*ħibr[a] ɛala waraq* ≈ empty (written) words. - *ʕumm il-ħibr* or *samak il-ħibr* squid. - *leela zayy il-ħibr* a terrible night.
محبرة *maħbara↑* /n pl *maħaabir*/ inkwell, container for ink.
حبّر *ħabbar* /vt/ to ink over, apply ink to. *bi-yħabbaru looħit ir-rasm* they go over the diagram in ink. - vn *taħbiir*; ava/pva *miħabbar*.
اتحبّر *ʕitħabbar* /vi/ to be inked. *ʕil-kiliʃehaat bi-titħabbar bi-ħibr[i] ṭbaaɛa* the plates are covered with printer's ink. - iva *mitħabbar*.

ح ب ر [2]
حبر *ħabar* /n/ **1** black rough silk cloth. **2** /coll/ women's outer wrap(s) made of this cloth.
حبرة *ħabara* /unit n, pl *-aat*/ woman's outer wrap of black silk or velvet.

ح ب ر [3]
حبارى *ħubaara* /n pl *ħubarayaat*/ bustard.

ح ب ز see ح ب ب ز ا: *ħabbaza*

ح ب س
حبس *ħabas (i)* /vt/ **1** to confine, constrict. *ħabast[i] nafs-i barra* I locked myself out. *ħabas ɛannina l-mayya* he cut off our water supply. ‖*ħabas nafas-(u)* to hold (one's) breath. - *ħabas damm-(u)* to cause (s.o.) to feel constricted and ill at ease, put a damper on the spirits of. **2** to shut up, imprison. *law ma-dafaɛt[i]-ʃ il-ɣaraama yiħbisuu-k* if you don't pay the fine they'll put you in prison. – /vi/ **3** to finish off a meal (with a cigarette, tea etc.). *haat lina ʃaay niħbis bii (ɛal-ʃakl)* get us some tea to finish off the meal. - vn *ħabs, ħabasaan*; ava *ħaabis*; pva *maħbuus*.
حبس *ħabs* /n/ **1** imprisonment. ‖*ħabs[i] quʃlaaq [mil]* confinement to barracks. **2** jail, prison. *xaduu fil-ħabs* they took him to jail.
محبوسة *maħbuusa* /n/ variety of backgammon.
محبس *maħbas* /n pl *maħaabis*/ **1** stopcock. **2** clasp, clip (of a necklace, bracelet etc.).
اتحبس *ʕitħabas* /vi/ passive of *ħabas*. - iva *mitħibis*.
انحبس *ʕinħabas* = *ʕitħabas*. - iva *minħibis*.
حبّس *ħabbis* **1** /vt/ to confine, lock up, imprison (a number of things or a number of times). *ħabbisit il-firaax* she shut up (all) the chickens. **2** /vi/ = *ħabas* 3. - vn *taħbiis*; ava/pva *miħabbis*.
تحبيسة *taħbiisa* /inst n, pl *-aat*/ a cigarette, drink of tea etc., taken at the end of a meal.
اتحبّس *ʕitħabbis* /vi/ passive of *ħabbis*. - iva *mitħabbis*.
احتباس *ʕiħtibaas↑* /n/ impediment. *ʕiħtibaas fil-bool [path]* retention of urine.

ح ب ش [1]
حبّش *ħabbiʃ* /vt and vi/ **1** to make an assortment of, gather a variety of (usually food). *ʕakla mħabbiʃa* a meal including a variety of foods. ‖*ħabbiʃ il-ħikaaya* he spiced up the story. **2a** to pad, pad out. *bi-nħabbiʃ-ha* (or *bi-nħabbiʃ ɛaleeha) la-tingiriħ* we pad it over so that it doesn't get scratched. **2b** to fill in, fill up. *ħabbiʃ il-xurm illi fil-ħeeṭa bil-muuna* fill the hole in the wall with mortar. - vn *taħbiiʃ*; ava/pva *miħabbiʃ*.
تحبيشة *taħbiiʃa* /inst n, pl *taħabiiʃ, taħbiʃaat*/ **1** an assortment of snacks. **2** seasoning (of a dish).
اتحبّش *ʕitħabbiʃ* /vi/ passive of *ħabbiʃ*. - iva *mitħabbiʃ*.

ح ب ش [2]
حبش *ħabaʃ* /coll n/ Ethiopians.
الحبشة *ʕil-ħabaʃa* /prop n/ Ethiopia.
حبشى *ħabaʃi* /adj */ **1** Ethiopian, Ethiopic. – /n/ **2** Amharic. **3** /pl *ħabaʃ, ʕaħbaaʃ, ħabaʃa, ħibʃ↓*/ an Ethiopian.

ح ب ك
حبك *ħabak (u, i)* /vt/ **1** to cause to fit exactly. *ʕil-mumaṛriḍa ħabakit ir-rubaaṭ ɛag-garħ* the nurse tightened the bandage over the wound. *ʕiħbuki l-ɣaṭa ɛal-ħalla kwayyis* fit the lid properly on the pan. **2** to be (too) precise with (s.th.). *ma-tuħbuk-haa-ʃ* don't be so finicky! **3** *ħabak* or *ħabakit* /impers/ it was necessary, it had to be. *ħabak* (or *ħabakit) ʕinnak tiigi tzaɛɛaq-li ḳuddaam in-naas* did you really have to come and give me a row in front of everyone? - vn *ħabk, ħabakaan*; ava *ħaabik*; pva *maħbuuk*.
حبكة *ħabka* /n pl *-aat*/ **1** instance noun of *ħabk*. **2** plot (of a story, play etc.). **3** foundation loop of a crochet pattern. **4** headband on the spine of a book.
اتحبك *ʕitħabak* /vi/ passive of *ħabak*. - iva *mitħibik*.
انحبك *ʕinħabak* = *ʕitħabak*. - iva *minħibik*.
حبّك *ħabbik* /vt/ **1** to cause to fit properly. **2** to make difficult, be finicky with (s.th.). *bi-yħabbik il-ʕumuur* he complicates things. *ʕawwil ziyart-i l-ɛelit-ha kaanit*

miḥabbika ʃwayya the beginning of my visit to her family was a little tense. - vn *taḥbiik*; ava/pva *miḥabbik*.

اتحبّك *ʔitḥabbik* /vi/ passive of *ḥabbik*. - iva *mitḥabbik*.

¹ ح ب ل

حبل *ḥibil (a)* /vi/ **1** to become pregnant. *ḥiblit minni* she got pregnant by me. ‖ *lamma tiḥbal il-baʏla* ≈ when Hell freezes over. **2** to have one's fill, be sick (of s.th.). *ʔil-waaḥid ḥibil wi-wilid mik-kalaam da* I've had my fill of that nonsense! - vn *ḥabal, ḥabalaan*; ava *ḥablaan*.

حبل *ḥabal* /n/ pregnancy. *fustaan il-ḥabal* maternity dress.

حبلة *ḥibla* /fem adj, pl *-iin, ḥabaalaʔ* / pregnant.

حبّل *ḥabbil* /vt/ to make pregnant. ‖ *yiḥabbilu l-baʏla* ≈ they tell fantastic lies. - vn *taḥbiil*; ava/pva *miḥabbil*.

انحبّل *ʔitḥabbil* /vi/ to be made pregnant. - iva *mitḥabbil*.

² ح ب ل

حبل *ḥabl* /n pl *ḥibaal, ʔiḥbaal*/ rope, cord. *naʈʈ il-ḥabl* skipping. *ḥabl' ʏasiil* clothes-line. *ḥabl' nagaah* life-line. *ʔil-ḥabl is-surri* the umbilical cord. ‖ *laabis kull illi ʕal-ḥabl* ≈ dressed to kill. - *ḥibaal il-mawadda* ties of friendship. - *ḥibaal-u ʈawiila* he takes his own sweet time.

حبّال *ḥabbaal* /n pl *ḥabbaala*/ **1** rope maker. **2** *[constr]* one of a team of workmen who tug the mixing-shovel through cement with a rope.

حابل *ḥaabil: ʔil-ḥaabil ʕala n-naabil* every Tom, Dick and Harry, as in *fi-ramaḍaan tilaaqi l-ḥaabil ʕala n-naabil ʃaayil is-sibḥa* during Ramadan you'll find everybody and his brother carrying prayer beads.

¹ ح ب ى

حبى *ḥaba (i)* /vi/ to crawl on all fours. *ʔil-waad laazim yiḥbi qabl' ma yimʃi* a child must crawl before he can walk. - vn *ḥaby*; ava *ḥaabi*. see further under ح ا ب ا

² ح ب ى

حابى *ḥaaba* /vt/ to show partiality towards (s.o., at s.o. else's expense). - vn *muḥabaah*; ava/pva *miḥaabi*.

انحابى *ʔitḥaaba* /vi/ passive of *ḥaaba*. - iva *mitḥaabi*.

¹ ح ت ت

حتّ *ḥatt (i)* /vt/ to break, cut or tear pieces off (s.th.), chip away at (s.th.). - vn *ḥatataan*; ava *ḥaatit*; pva *maḥtuut*.

حتّة *ḥitta* /n pl *ḥitat*/ **1** (also pl *ḥittaat*) piece, bit, item. *ḥittit ḥadiid* a piece of iron. *ma-ʕad-ʃ' fiyya ḥitta ʕala baʕḍ-a-ha* there is not a bit of me left in one piece. *ʔid-dasta fiiha tnaaʃar ḥitta* there are twelve items in a dozen. ‖ *ḥitta ḥitta* bit by bit, little by little. - *ḥitta bi-* a coin or note worth ..., as in *ḥitta b-xamsa* a five-piastre piece (or note). - *ḥitta waḥda* (1) at one go, straight off, as in *baqa waziir ḥitta waḥda* he became a minister straight off. (2) in one piece, as in *ʔiddii-ni talaata kiilu laḥma ḥitta waḥda* give me three kilos of meat in one piece. - *ʔil-ḥitta btaʕt-u* his girlfriend. - *ḥitat il-maṭbax* the kitchen rags. - *ḥaṭṭ' ḥitta fil-fingaan* (or *taḥt' dirs-u*) he put a piece of opium in his cup (of coffee) (or in the corner of his mouth). - *ḥa-yaakul min-... ḥitta* to suit perfectly (of clothes), as in *ʔil-mandiil ḥa-yaakul min qurit-ha ḥitta* the kerchief looks bewitching around her forehead. **2a** place, locality. *fii ḥitta warma f-ʔiid-i* there is a swollen place on my hand. *laffeet ʕaleek fi-kull' ḥitta* I looked for you everywhere. **2b** district, neighbourhood. *ʔahl il-ḥitta* the people of the neighbourhood. *hiyya ʔaḥla waḥda fil-ḥitta kull-a-ha* she's the prettiest girl in the whole district. **2c** *[euphem]* red light district. — *ḥittit* /no pl/ **3a** a little of, a smidgen of. *ḥittit ʕayyil* a mere scrap of a child. *ḥittit ʔafandi ma-yiswaa-ʃ nikla* a little guy not worth a penny. *ma-fii-ʃ wala ḥittit ḍill* there's not a spot of shade. **3b** /often w additional intensifiers, esp *diin*/ an incredible ..., a real ...! *ʔamma ḥittit ḥufra* what an incredible hole! *ʔallaah yurzuq-kum bi-ḥittit nula* may God send you a real disaster! *ʔimbaariḥ sihirna ḥittit diin sahra* yesterday we had such a wonderful evening! *xaṭabt' ḥittit diin xuṭba bint' kalb* I gave a bloody fine speech!

حتيته *ḥiteeta* /n/ small piece, bit. *la ḥitta wala ḥteeta* not the littlest bit.

حتّت *ḥattit* /vt/ to break, cut or tear into small pieces. - vn *taḥtiit*; ava/pva *miḥattit*.

انحتّت *ʔitḥattit* /vi/ to be broken, cut or torn into small pieces. - iva *mitḥattit*.

² ح ت ت

حتى *ḥatta* /adv/ **1** even. *di ḥatta maʃhuura fil-ʕeela* she's even renowned within the family. *bi-yruuḥ ʃuʏl-u raakib ʔutubiis walla biskilitta walla ḥatta maaʃi* he goes to work on a bus, or a bicycle, or even walking. *m-amʃii-ʃ ʔilla w-maʕaaya munfaax ḥatta wa-law kunt' waxid-ha laffa* I don't go without a pump even if I'm only going for a spin. — /conj/ **2** until. *ʔiftaʏal ʈuul il-leel ḥatta ʈiliʕ in-nahaar* he worked through the night until daybreak. **3** so that, in order that. *ʕamalit ʕayyaana ḥatta yiigi yzur-ha* she pretended to be ill so that he would visit her.

ح ت ت ك
حتتك *ḥatatak: ḥatatak batatak* rapaciously, feverishly, frantically. *nizil ʕala l-ʕeef ḥatatak batatak* he gobbled up the bread ravenously. *nizlit ʕalee ḍarbᵃ ḥatatak batatak* she beat him frenziedly.

ح ت ح ت
حتحت *ḥatḥit* /vt/ to break into small pieces, divide into bits. ‖*ḥatḥit fil-kalaam* to split hairs. - vn *ḥatḥata*; ava/pva *miḥatḥit*.
اتحتحت *ʔitḥatḥit* /vi/ to be broken into small pieces. - iva *mitḥatḥit*.

ح ت م
حتما *ḥatman* /adv/ decidedly, definitely. *ʔinzili l-balad - ḥatman ḥa-tlaaqi l-ʔumaaf illi-nti ʕawzaa* go into town and you're sure to find the material you want.
حتميّة *ḥatmiyya*↑ /n/ inevitability. *ʔigtimaaʕ bi-nnaaqiʃ fii ʔil-maʕraka w-mutaṭallabat-ha w-ḥatmiyyit-ha* a meeting at which we discuss the battle, its demands and inevitability.
محتوم *maḥtuum* /adj */ inevitable. ‖*qadar wi-maḥtuum* it's fate and there's nothing one can do about it.
حتّم *ḥattim* /vt/ **1** to demand, decree, make compulsory. *wagb-i yḥattim ʕalayya ṣ-ṣaraaḥa* my duty compels me to be frank. **2** to insist on. *ḥattimit ʕaleena nbaat* she insisted that we stay the night. ‖*ḥattim raʃy-(u)* to insist wilfully on, as in *ḥattim raʃy-u ʔinnu ysaafir il-balad fi-nuṣṣ il-leel* he would brook no objection to his going to the village in the middle of the night. - vn *taḥtiim*; ava *miḥattim*; pva *muḥattam*.
تحتيمة *taḥtiima* /n pl *-aat, taḥatiim*/ necessity, demand, exigence. ‖*ʕalee taḥatiim* ≈ he sometimes gets a bee in his bonnet.
اتحتّم *ʔitḥattim* /vi/ **1** to become inevitable. **2** to insist. **3** passive of *ḥattim*. - ava/iva *mitḥattim*.
استحتّم *ʔistiḥattim*↓ = *ʔitḥattim*. - ava *mistiḥattim*.

ح ت ى
حتى *ḥata (i)* /vt and vi/ to smooth-talk. *qaʕad yiḥti ʕaleeha* (or *yiḥtii-ha) lamma xad minha l-fuluus* he worked on her till he got the money from her. - vn *ḥaty*; ava *ḥaati*.

ح ث ث see ² ح س س

ح ج ب
حجب *ḥagab (i)* /vt/ to conceal. *rabb-i-na ḥagab ʕanni n-niʕma* God has hidden His grace from me. - vn *ḥagb, ḥagabaan*; ava *ḥaagib*; pva *maḥguub*.
حاجب *ḥaagib* /n pl *ḥawaagib*/ **1** eyebrow. ‖*ʔil-ʕeen ma-tiʕlaa-ʃ ʕala l-ḥaagib [prov]* (the eye will never become higher than the eyebrow) (1) polite rejoinder to praise ≈ I wouldn't presume to accept any praise. (2) admonition to respect social class. **2** diaphragm (contraceptive device). — /pl *ḥuggaab*/ **3** doorkeeper, usher. *ḥaagib maḥkama* court usher.
حجاب *ḥigaab* /n pl *ʔiḥgiba, ḥigíba*/ **1a** amulet (usually consisting of a written charm worn on the person). **1b** triangular decoration used in gold jewelry making. **2** /no pl/ **2a** woman's veil that covers the entire face. ‖*makfuuf ʕannu l-ḥigaab* he's clairvoyant, he has second sight. *-rafʕ il-ḥigaab* the emancipation of women, women's liberation. **2b** (also *ʔil-ḥigaab il-ḥaagiz*) *[anat]* diaphragm.
اتحجب *ʔitḥagab* /vi/ to be concealed (from sight). - iva *mitḥigib*.
انحجب *ʔinḥagab* = *ʔitḥagab*. - iva *minḥigib*.
حجّب *ḥaggib* /vt/ **1** to cause to wear an amulet. **2** to cover with a veil. - vn *taḥgiib*; ava/pva *miḥaggib*; pva *muḥaggab*↑.
اتحجّب *ʔitḥaggib* /vi/ **1** to wear an amulet, be protected by divine or magical influence. **2** to wear a veil. - ava *mitḥaggib*.
احتجب *ʔiḥtagab* /vi/ to disappear from sight. *ʔiḥtagabit ʕanna l-muddit ʔusbuuʕ* we haven't seen her for a week. - vn *ʔiḥtigaab*; ava *miḥtigib, muḥtagib*.

¹ ح ج ج
حجّ *ḥagg*¹ *(i)* /vi/ to go on pilgrimage (especially to Mecca). *muusim il-ḥigg* the season of the yearly pilgrimage to Mecca. - vn *ḥigg, ḥagg*; ava *ḥaagig*.
حجّة *ḥigga*¹ /inst n, pl *-aat*/ a pilgrimage. ‖*zu l-ḥigga* Zu l-Higga, twelfth month of the Muslim year (during which the annual pilgrimage takes place).
حاجّ *ḥagg*² /n pl *ḥuggaag*/ **1a** pilgrim, one who has performed the Meccan pilgrimage. **1b** title of, and form of address or reference to, a pilgrim. ‖*ʔaḥmad zayy il-ḥagg aḥmad [prov]* (Ahmad is as good as Pilgrim Ahmad) ≈ all people are equal whatever their titles. **2** polite form of address to an older man.
حاجّة *ḥagga* /n pl *ḥuggaag*/ **1a** female pilgrim. **1b** title of, and form of address or reference to, a female pilgrim. **2** polite form of address to an older woman.

² ح ج ج
حجّة *ḥigga*² /n pl *ḥigag*/ pretext, excuse. *ma-ʕad-lak-fⁱ ḥigga* you've run out of excuses.

حجّة *ḥugga* /n pl *ḥugag*/ **1** title deed to property. **2** proof, evidence.

احتجّج *ʔiṯḥaggig* /vi/ to offer pretexts, make excuses. *kull' ma tisʔal-ni ɛan ɛadam noom-i ʔaṯḥaggig bil-baraʏiit* whenever she asks why I don't get any sleep, I give the fleas as an excuse. ‖ *bi-yiṯḥaggig bi-faɛr' raas-u* he'll make an excuse of anything. - ava *miṯḥaggig*.

احتجّ *ʔiḥtagg* /vi/ to complain, protest. *ʔil-ḥakam iḥtagg[a] ɛala l-gumhuur* the referee protested against the (behaviour of) the crowd. - vn *ʔiḥtigaag*; ava *muḥtagg, miḥtagg*.

استحجّج *ʔistiḥaggig*↓ /vi/ to offer pretexts, make false excuses. - ava *mistiḥaggig*.

ح ج ر[1]

حجر *ḥagar*[1] /n/ **1** /coll/ stone(s). *ʔil-ḥagar ig-giiri* limestone. **2** /pl *ḥigaara, ʔaḥgaar*/ a stone. *ḥagar rafiid* the Rosetta stone. ‖ *ḥagar id-damm* green stone hollowed out to hold a few drops of blood, worn by women as a (folk) remedy for internal bleeding. - *ʔil-ḥagar il-ʔaswad* sacred stone fixed in one of the corners of the Kaaba. - *ḥagar ḥammaam* or *ḥagar rigleen* pumice stone. - *ḥagar zeet* oilstone. - *ʔaḥgaar kariima* precious stones. - *makanit ḥagar [print]* lithograph machine. - *raas-u zayy il-ḥagar* ≈ he's pigheaded. - *ḥagar daayir wala sabɛ' naayim [prov]* (a rolling stone is better than a sleeping lion) ≈ a little thing that does something is better than a big thing that does nothing. - *ʔil-ḥagar id-daayir la budd[a] ɛan laṭṭ-u* ≈ you can't get away with everything all the time. **3** /pl *ḥigaara, ḥugaara*/ **3a** dry battery. **3b** spectacle lens. **3c** *ḥagar wallaaɛa* flint of a lighter. **4** /pl *ʔiḥgira, ḥigíra*/ pottery bowl of a water-pipe (see Pl.I, 2), (loosely also) a pipeful of tobacco. *niʃrab ḥagar taani qabl' ma nimʃi* let's smoke another pipe of tobacco before we go.

حجرة *ḥagara* /unit n, pl *-aat*/ a stone.

حجراية *ḥagaraaya* /n pl *-aat*/ piece of stone.

حجّار *ḥaggaar* /n * and pl *ḥaggaara*/ **1** quarryman. **2** stonemason.

محجر *maḥgar* /n pl *maḥaagir*/ quarry.

محجراتي *maḥgaraati* /n pl *-yya*/ quarry-man.

حجّر *ḥaggar* /vt/ **1** to chock (a wheel) with a stone. *rakant' f-ḥitta mdaḥdara w-ḥaggart il-ɛarabiyya* I parked on a slope and put a chock under the car wheel. — /vi/ **2** to become hard (as stone), become petrified. **3** to behave stubbornly. - vn *taḥgiir*; ava/pva *miḥaggar*.

محجّر *miḥaggar* /pva/ ‖ *wazn' mḥaggar [mus]* four-four time.

اتحجّر *ʔiṯḥaggar* /vi/ **1** to be chocked with a stone (of a wheel). **2** to become hard, become petrified. - ava/iva *miṯḥaggar*.

ح ج ر[2]

حجر *ḥagar*[2] *(u): ḥagar ɛala* **1** to confine in quarantine. *ḥagr' ṣiḥḥi* quarantine (for humans). *ḥagr' zraaɛi* quarantine (for animals and plants). **2** *[leg]* to declare legally incompetent. - vn *ḥagr*; ava *ḥaagir*; pva *maḥguur*.

حجرة *ḥugra*↑ /n pl *ḥugar, ḥugraat*/ room. *ḥugrit taftiiʃ* inspection chamber. *ḥugrit xaraayiṭ* map room. *ḥugrit rasm* (1) artist's studio. (2) art room (in a school).

حجر *ḥigr* /n pl *ḥigaar*/ **1** lap. *ɛala ḥigr' ʔumm-u* on his mother's lap. **2** (also *ʔil-ḥigreen*) crotch. *ḥigr il-banṭaloon* the crotch of the trousers.

اتحجر *ʔiṯḥagar: ʔiṯḥagar ɛala* passive of *ḥagar ɛala*. - iva *miṯḥigir*.

انحجر *ʔinḥagar* = *ʔiṯḥagar*. - iva *minḥigir*.

ح ج ز

حجز *ḥagaz (i)* **1** /vt/ to reserve. *ɛaayiz aḥgiz ʔooḍa* I want to book a room. **2** to detain. *ḥagazuu-ni liṯ-taḥqiiq* they detained me for questioning. **3** to bar, block. — /vi/ **4** to make a barrier, put up a barrier. *ḥagazu been il-ʔaɛḍaaʔ wi-ʏeer il-ʔaɛḍaaʔ* they put up a barrier between the members and the non-members. ‖ *ʔil-ḥigaab il-ḥaagiz [anat]* diaphragm. - vn *ḥagz*; ava *ḥaagiz*; pva *maḥguuz*.

¶ *ḥagaz ɛala [leg]* to attach, issue a writ of attachment for. *ʔil-muḥḍar ḥagaz ɛala dukkaan-i* the writ server attached my shop.

حاجز *ḥaagiz* /n pl *ḥawaagiz*/ **1** barrier. ‖ *ḥaagiz iṣ-ṣoot* the sound barrier. - *ḥaagiz moog* breakwater. **2** *[athl]* hurdle.

حاجزة *ḥagza* /n pl *-aat*/ partition.

حجاز *ḥugaaz* /n/ *[mus]* mode in Arabic music beginning on D and having E flat, B flat, and F sharp.

الحجاز *ʔil-ḥigaaz* /prop n/ the Hijaz.

حجازى *ḥigaazi* /adj/ of or pertaining to the Hijaz. ‖ *barsiim ḥigaazi* common medick (Medica gestiva), a variety of *barsiim*, superior for its year-round growth and retention of value as fodder when dried.

اتحجز *ʔiṯḥagaz* /vi/ passive of *ḥagaz*. - iva *miṯḥigiz*.

حجّز *ḥaggiz* /vi/ to act as a barrier. *waaḥid faayit ḥabb' yḥaggiz wi-yxallaṣ-hum min baɛḍ* someone who was passing wanted to interpose himself and break up the fight. - vn *taḥgiiz*; ava *miḥaggiz*.

ح ج ز ك -
حجازكار *ħugazkaar* <T *hicazkâr*> /n/ *[mus]* compound mode beginning on C and having D flat and A flat. *hugazkaar kurd* compound mode beginning on C and having D flat, E flat, A flat, and B flat.

ح ج ل
حجل *ħagal (i)* /vi/ to hop on one foot. *ʃir-rigl illi tiħgil ʕaleeha ʃawwil il-liʕba laazim titann-ak tiħgil ʕaleeha l-ʃaaxir il-liʕba* the foot on which you hop at the beginning of the game you must continue hopping on till the end. ‖*ħagalt*^{i} *fiiha (ya ɤraab il-been)* ≈ the situation has got very bad thanks to your interference (said to one considered to be a bearer of misfortune). - vn *ħagl, ħagalaan*; ava *ħaagil*.
حجلة *ħagla* /inst n, pl *-aat*/ a hop. *liʕbit il-ħagla* hopscotch.
حجّالة *ħaggaala* /n/ bedouin dance in which a woman symbolically chooses a husband from a circle of men.

ح ج م [1]
حجم *ħagam (i)* /vt/ to cup, scarify. - vn *ħagm, ħagamaan*; ava *ħaagim*; pva *maħguum*.
حجامة *ħigaama* /n/ cupping, scarification (especially of the head).
حجّام *ħaggaam* /n */ *[obsol]* cupper.
انحجم *ʃitħagam* /vi/ to be cupped. - iva *mitħigim*.
أحجم *ʃaħgam*↑ /vi/ to hesitate, flinch. *ʃaħgam ʕan if-fihaada* he declined to give evidence. - vn *ʃiħgaam*; ava *muħgim*.

ح ج م [2]
حجم *ħagm* /n pl *ʃaħgaam, ħigíma, ħuguum*↓/ size, volume. *baaku ħagm*^{i} *kbiir* a large-sized packet. *ħagm il-ʃooḍa* the size of the room. *ħagm il-istismaraat* the volume of investment.

ح ج ن
حجنة *ħagna* /n/ common reed (Phragmites communis).

ح خ ا م
حاخام *ħaxaam* <Heb> /n pl *-aat*/ chief rabbi.
حاخامخانة *ħaxamxaana* /n pl *-aat*/ chief rabbi's residence and administrative centre.

ح د see و ح د: *ħida*^{2}

ح د ا see ح ز ى: *ħada*^{3}, *ħida*^{1}

ح د ء see ح د ى [2]: *ħiddaaya*

ح د ا ش ر see ء ح د: *ħidaaʃar*

ح د ب
أحدب *ʃaħdab* /adj, fem *ħadba*, pl *ħudb*/ hunchbacked.
حدّب *ħaddib* /vt/ to make convex. *ʕadasa muħaddaba* a convex lens. - vn *taħdiib*; ava/pva *miħaddib*; pva *muħaddab*.
تحديبة *taħdiiba* /pl *-aat, taħadiib*/ instance noun of *taħdiib*.
اتحدّب *ʃitħaddib* /vi/ **1** to become convex. **2** to be made convex. - ava/iva *mitħaddib*.

ح د ت see ح د س: *ħadiit, ħadduuta, ħaddit, ʃitħaddit*

ح د ث see ح د س

ح د ج see ح د ى ج: *ħudeeg*

ح د د [i]
حدّ *ħadd*^{1} *(i)* /vt/ to sharpen, heighten (the feelings). *ʃeeh illi ħadd-ak ʕal-bint*^{i} *di kida* what has so inflamed your love for that girl? - vn *ħadd, ħadadaan*; ava *ħaadid*; pva *maħduud*.
حدّ *ħadd*^{2} /n pl *ħuduud*/ **1** limit. *ħuduud il-balad* the borders of the country. *ʕala ħuduud il-maħaṭṭa* on the perimeter of the station. *ʃilzam ħadd-ak* (or *ħuduud-ak*) ≈ don't overstep the mark. *di ħkaaya zaadit ʕan ħadd-a-ha* this business has gone too far! *kull*^{i} *feeʃ wi-luu ħuduud* there's a limit to everything. ‖*fi-ħuduud* approximately, as in *ʕaayiz ʃadfaʕ fi-ħuduud xamsa gneeh* I want to pay about five pounds. - *ʕala ħadd*^{i} *taʕbiir-(u)*↑ as (he) put it, as (he) expressed it. - *ʕala ħaddin sawa* it's six of one and half a dozen of the other, it makes no difference. **2** cutting edge. *ħadd is-sikkiina* the blade of the knife. ‖*silaaħ bi-ħaddeen [fig]* a two-edged weapon. **3** *[Isl]* punishment prescribed by Islamic law. ‖*ħadd alla beeni w-beenu* ≈ I'll have nothing to do with him.
¶ *li-ħadd* /prep/ to, till. *baʕat if-ʃaɤɤaala l-ħadd*^{i} *ʕandi* she sent the maid over to my place. *saabit il-ɤasiil manʃuur li-ħadd il-maɤɤribiyya* she left the washing out till sunset. - *li-ħadd*^{i} *ma* /conj/ until. *ʕaʕadit tiʕayyaṭ li-ħadd*^{i} *ma thadd*^{i} *ħel-ha* she went on crying until she was exhausted. - *ʃila ħaddin ma*↑ to a certain extent.
حدّى *ħaddi* /adj/ pertaining to limit. *manṭiqa ħaddiyya* upper limit of a tax bracket. *ʃil-ʕilaawa zawwidit il-manṭiqa l-ħaddiyya btaʕt-i* the rise put me in a higher tax bracket.

حادّ *ħadd*[3], *ħaadd* /adj/ **1** sharp, sharpened. *sikkiina ħadda* a sharp knife. **2** acute (of illness). **3** *[geom]* acute (of an angle).

محدود *maħduud* /adj */ limited, bounded. *ʕil-waqt' maħduud* time's limited. *muxx-u maħduud* his outlook is narrow. *ʃirka maħduuda* a limited company.

أحدّ *ʕaħadd* /el/ more/most sharp. *ʕil-ɣeen ʕaħadd' mif-farfara [prov]* the (evil) eye is sharper than a sickle.

حدّة *ħidda* /n/ vehemence. *kallim-ni b-ħidda* he spoke to me vehemently.

حدودة *ħudúda*↓ = *ħuduuda*.

حدادة *ħidaada* /n/ metalwork, blacksmithery.

حدودة *ħuduuda*↓ /n pl *-aat*/ border of a plot of land. ‖*zaayid ɣan il-ħuduuda* gone too far.

حديد *ħadiid* /n/ iron, (loosely also) any metal. *sulufaat ħadiid* ferro-sulphates. *ħadiid ʒahr* cast iron. *ħadiid ʂulb* steel. *fooka bi-snaan ħadiid* a fork with metal prongs. ‖*xaduu fil-ħadiid* (1) they put him in irons. (2) they arrested him. - *ɣaayiʃ fil-ħadiid win-naar* living under dreadful strain, living in hell. - *baab il-ħadiid* /prop n/ Cairo's main railway station and the area around it. - *xara ħadiid*↓ iron filings.

حديدة *ħadiida* /n/ **1** /inst n, pl *ħadaayid*/ a piece of iron, a piece of metal. ‖*ɣala l-ħadiida* down to one's last penny, as in *ʂaraf il-ɢirfeen illi maɛaa wi-baɢa ɣal-ħadiida* he spent all the money he had and went broke. **2** /pl *ħadaadi*/ metal spike on top of a wall or railing.

حديدى *ħadiidi* /adj/ **1** of iron, of metal. ‖*ɣaziima ħadidiyya* a will of iron. - *raagil ħadiidi* robot. **2** dark grey.

حدّاد *ħaddaad* /n */ blacksmith, metal worker. ‖*beeni w-beenu ma ʂanaɛ il-ħaddaad* ≈ we are at daggers drawn.

حدّادى *ħaddaadi* /adj invar/ pertaining to metal and to metal working. *munʃaar ħaddaadi* metal-cutting saw. *musmaar ħaddaadi* large thick crudely-handmade nail.

اتحدّ *ʃitħadd* /vi/ **1** to be sharpened. **2** to lose one's temper. - ava/iva *mitħadd*.

حدّد *ħaddid* /vt/ **1** to limit, restrict. *ʃis-sawra ħaddidit il-milkiyya* the revolution limited property rights. ‖*taħdiid in-nasl* birth control. **2** to determine, specify. *ħaddidit il-maħkama yoom lil-beeɛ* the court fixed a day for the sale. *ɣayz-ak tiħaddid biʒ-ʒabṭ' miin illi ɣalṭaan* I want you to determine exactly who is at fault. *tiqdar tiħaddid sinn ig-gamal bi-snaan-u* you can tell the age of the camel by its teeth. -/the literary passive imperfect form occurs/ *ʃis-siɛr' b-yuħaddad ħasab ʃuhrit il-muṭrib* the price is fixed according to the fame of the singer. **3** to delimit. *niħaddid ɢiṭɛit il-ʃarq' big-giir* we mark the boundaries of the plot of land with lime. - vn *taħdiid*; ava/pva *miħaddid*; pva *muħaddad*.

اتحدّد *ʃitħaddid* /vi/ passive of *ħaddid*. - iva *mitħaddid*.

احتدّ *ʃiħtadd* /vi/ to become heated (in argument etc.). *dayman yiħtadd' fil-munaɢʃa* he always gets worked up in discussion. - vn *ʃiħtidaad*; ava *miħtadd*.

مستحدّ *mustaħadd* /n pl *-aat*/ *[butcher]* knife-sharpening steel.

ح د د[2]

حدّ *ħadd*[4] /pron/ someone, anyone. *ħadd' fiihum ballaɤ ɣanni* one of them informed on me. *ħadd' ywallaɛ ħaaga w-yisha ɣaleeha* would anyone (be so stupid as to) light something and forget all about it? *ma-ħadd'-ʃ ɣadd-u-hum* no-one has counted them.

حدّ *ħadd*[5] /n pl *ħuduud*/ Sunday. *taɛaala yoom ħadd* come on a Sunday. *taɛaala l-ħadd* (or *yoom il-ħadd*) come (this) Sunday.

ح د د[3] see also ح د ى[2]

حدّ *ħidd* sound used to chase kites away (e.g., from chickens).

ح د ر

انحدر *ʃinħadar* /vi/ **1** to fall down, slide down. *ʃinħadar ɣala ɢahr-u* he fell down on his back. **2** to deteriorate. *ʃinħidaar il-ʃaxlaq* moral decline. - vn *ʃinħidaar*; ava *minħidir*.

ح د ر ج

حدارجه *ħadarga: ħadarga badarga* the opening phrase of a children's counting game.

ح د س

حدث *ħadas*↑ *(a)* /vi/ to happen. *ħadas fiɛlan* it actually happened. - vn *ħadas, ħuduus*; ava *ħaadis*.

حدث *ħadas*↑[2] /n/ **1** /pl *ʃaħdaas*/ event, happening. *ziyart-u kaanit ħadas kibiir* his visit was a great event. **2** /no pl/ *[Isl]* ritual uncleanness, ritual impurity.

حادث *ħaadis*↑ /n pl *ħawaadis*/ event, happening. *ħaadis saɛiid* a happy event (i.e. a birth).

حادثة *ħadsa* /n pl *ħawaadis*/ **1** incident, event. *ħadsa ʒariifa ħaṣalit fil-igtimaaɛ* a nice thing occurred during the meeting. **2** accident. *kaan fi-ʃutubiis ɣamal ħadsa* he was in a bus that was involved in an accident.

حديث، حديث *ħadiit* /n/ talk, conversation. ‖*kitir il-ħadiit wil-kalaam* tongues started wagging.

حديث *ħadiis* /n/ **1** /coll/ the Tradition(s) of the Prophet Muhammad. — /pl *ʃaħadiis*/ **2** a Tradition of the Prophet Muhammad. **3**↑ formal talk or address (e.g., on the radio). — /adj */ **4** modern. *ʃiʃ-ʃiɛr il-ħadiis*

modern poetry. **5** new, recent. *katakiit ḥadiisit il-faqs* newly-hatched chicks. ‖*ḥadiis is-sinn* young.
أحدث ʔaḥdas[1] /el/ more/most modern or recent.
حدّوتة، حدّوتة *ḥadduuta* /n pl *ḥawadiit*/ **1** story for children. **2** piece of gossip, rumour.
محدت *maḥdat* /n pl *maḥadiit*/ *[derog]* conversation, gossip session.
أحداث ʔaḥdaas /n/ **1** /coll/ juvenile(s). **2** (also *malgaʔ ʔaḥdaas*) reform school.
حدّث، حدّت *ḥaddit, ḥaddis*↑ **1** /vt/ to talk to. **2** /vi/ to talk, speak. - vn *taḥdiit, taḥdiis*; ava/pva *miḥaddit, miḥaddis*.
محدّتاتي *miḥadditaati* /n pl *-yya*/ *[derog]* one given to longwindedness.
اتحدّث، اتحدّت *ʔitḥaddit, ʔitḥaddis*↑ /vi/ to exchange talk, chat. *xallii-na ṇitḥaddit wi-nidḥak fiwayya* let's chat and laugh a little. - ava *mitḥaddit*.
أحدث ʔaḥdas[2] **1** /vt/ to produce, give rise to. *kalaam-u ʔaḥdas zuhuul* his words caused amazement. **2** /vi/ *[Isl]* to become ritually unclean, enter into a state of ritual impurity. - vn *ʔiḥdaas*; ava *muḥdis*.
إحداثيّات *ʔiḥdasiyyaat* /pl n/ *[math]* co-ordinates.
محدث *muḥdis* (also *muḥdis niʒma*) /n */ upstart, parvenu.

ح د ف

حدف *ḥadaf (i)* /vt/ **1a** to throw, toss. *ḥadaf-li k-koora* he threw me the ball. ‖*beet maḥduuf* an out-of-the-way house. **1b** to throw at, pelt. *ḥadafuu biṭ-ṭuub* they pelted him with stones. **2** to discard. *farravt il-maḥfaẓa mi-lli fiiha w-ruḥt[a] ḥadif-ha* I emptied the wallet of its contents and threw it away. — /vi/ **3** to veer. *ʔid-diriksiyoon bi-yiḥdif yimiin* the steering-wheel pulls to the right. - vn *ḥadf, ḥadafaan*; ava *ḥaadif*; pva *maḥduuf*.
¶ *ḥadaf fik-kalaam* to speak rashly, as in *damm-ak faayir w-b-tiḥdif fik-kalaam yimiin wi-fmaal* you're all excited and you don't know what you're saying.
حدفة *ḥadfa* /inst n, pl *-aat*/ a throw.
حدّاف *ḥaddaaf* /n pl *-aat*/ **1** flywheel. **2** shuttle. **3** *[naut]* lifeline.
حدّافة *ḥaddaafa* /n pl *-aat*/ **1** *[text]* pick. **2** balance-wheel (in a watch or clock). **3** clapper (of a bell). **4** counterweight on a locomotive wheel. **5** rocker arm on an oil-rig pump.
انحدف *ʔitḥadaf* /vi/ **1** to be thrown. ‖*balwa wi-tḥadafit ʕalee* ≈ what a disaster it is that has befallen him! **2** to be discarded. - iva *mitḥidif*.
انحدف *ʔinḥadaf* = *ʔitḥadaf*. - iva *minḥidif*.
حدّف *ḥaddif* /vt/ **1** to throw (a number of things, or a number of times). **2** to pelt (with a number of missiles). *ʔilli beet-u min ʠizaaz ma-yḥaddif-ʃ in-naas biṭ-ṭuub [prov]* people who live in glass houses shouldn't throw stones. - vn *taḥdiif*; ava/pva *miḥaddif*.
اتحدّف *ʔitḥaddif* /vi/ passive of *ḥaddif*. - iva *mitḥaddif*.

ح د ق[1]

حدق *ḥuduʠ (a)* /vi/ to become (too) salty. *ʔil-mayya kull-a-ha tbaxxarit wil-ʔakl[i] ḥuduʠ* all the water evaporated so the food became too salty. - vn *ḥuduʠiyya*.
حدوقيّة *ḥuduʠiyya* /n/ sharpness, piquancy (of taste).
حادق *ḥaadiʠ* /adj/ **1** salty. *gibna ḥadʠa* salty (white) aged cheese. ‖*mayya ḥadʠa* solution made from chemical salts. **2** sour, tart, sharp. *burtaʠaana ḥadʠa* a sour orange.
حوادق *ḥawaadiʠ* /pl n/ salty foods.
حدق *ḥidiʠ* /adj */ clever, quick-witted.
أحدق ʔaḥdaʠ /el/ **1a** more/most salty. **1b** more/most sour. **2** more/most clever or quick-witted.
حداقة *ḥadaaʠa* /n/ sharp-wittedness. *ʔil-mawḍuuʕ waaḍiḥ ma-bidd[i]-huu-ʃ ḥadaaʠa* the matter is obvious, it doesn't need any special cleverness.
حدّق *ḥaddaʠ* **1** /vt/ **1a** to taste in order to test for saltiness. **1b** to add salt to (food). **1c** to make too salty. **2** /vi/ to eat something salty or sharp in taste. - vn *taḥdiiʠ*; ava/pva *miḥaddaʠ*.
¶ *ḥaddaʠ ʕala* (1) to mock, poke fun at. (2) to try to attract, try to pick up, make passes at (a girl).
تحديق *taḥdiiʠ* /n/ sharp-wittedness. *bit-taʕab wit-tazniiʠ wit-taḥdiiʠ iṭḥaṣṣalt[a] ʕala talaata gneeh* with a lot of effort and belt-tightening and scheming I got together three pounds.
اتحادق *ʔitḥaadiʠ* /vi/ to act smart, play the smart aleck. - ava *mitḥaadiʠ*.
احدقّ *ʔiḥdaʠʠ* /vi/ **1** to become salty (of food). **2** to mature (of pickles). - ava *miḥdaʠʠ*.
استحدق *ʔistaḥdaʠ* /vt/ **1a** to select for saltiness. **1b** to consider (too) salty. **2a** to select for quick-wittedness. **2b** to consider (too) quick-witted. — /vi/ **3** to act clever, affect cleverness. - vn *ʔistiḥdaaʠ*; ava *mistaḥdaʠ*.

ح د ق[2]

حدقة *ḥadaʠa* /n pl *-aat*/ pupil (of the eye).
حديقة *ḥadiiʠa*↑, *ḥadiiqa*↑ /n pl *ḥadaayiʠ*/ garden. ‖*ḥadaayiʠ il-ʠubba* residential area in north-west Cairo.

ح د و[1]

حدا *ḥada[1] (i)* /vt/ to shoe (e.g., a horse). - vn *ḥady*; ava *ḥaadi*; pva *maḥdi*.

حدو *ḥidw* /coll n/ *[rur]* leather sandals with one thong over the instep and another encircling the big toe.
حدوة *ḥidwa* /n pl *-aat, ḥidaw*/ **1** horseshoe. **2** unit noun of *ḥidw*.
اتحدى *ʔitḥada* /vi/ to be shod (e.g., of a horse). - iva *mitḥidi*.

ح د و [2]
حدى *ḥada*[2] *(i)* /vi/ to sing or chant (to a camel caravan). - vn *ḥida*; ava *ḥaadi*.
حادى *ḥaadi*[2] /n pl *ḥudaah*/ one who sings or chants to a camel caravan.

ح د ي [1]
اتحدّى *ʔitḥadda* /vt/ to challenge, defy. *ʔaṭḥaddaa-k law ʃiribt' xamsa biira wara baʕḍ* I challenge you to drink five beers in a row. - ava *mitḥaddi*.
تحدّى *taḥaddi* /n pl *-yaat*/ challenge. *taḥaddiyaat il-ʕaṣr* the challenges of contemporary society.

ح د ي [2]
حدّاية *ḥiddaaya* /n pl *ḥadaadi, ḥiddayaat*/ kite (bird). ‖ *ʔil-ḥiddaaya ma-tirmii-ʃ katakiit [prov]* (a kite doesn't throw away chicks) a man doesn't discard what he most values. - *ya mara ya ḥiddaaya* ≈ you old buzzard of a woman! see further under ح د د [3]

ح د ي [3] see ح ا د ي [1]: *ḥaadi*[1]

ح د ي ج
حديج *ḥudeeg:* *ʔabu ḥdeeg* stork.

ح ذ ا ء see ح ز ى

ح ذ ر see ح ز ر [2]

ح ذ ف see ح د ف

ح ذ ق see ح د ق [1]

ح ذ و see ح د و [1] and ح ز ى

ح ر ب [1]
حرب *ḥarab (i)* /vi/ to strive persistently (usually with evil intent). *ḥarab ʕala l-itneen li-ḥadd' ma farraq benhum* he kept scheming against the two (friends) till he split them up. *ḥarabu ʕala ʔamwaal ʔabuu-hum* they tried all means to get their hands on their father's money. ‖ *bi-yiḥrib fi-nafs-u* he's fuming, he's boiling with anger. - vn *ḥarb, ḥarabaan*; ava *ḥaarib*; pva *maḥruub*.
حرب *ḥarb* /fem n, pl *ḥuruub, ḥurubaat*↓/ war. *ʔil-ḥarb il-ʕalamiyya t-tanya* the Second World War. ‖ *ḥarb abu zeed maʕa diyaab* ≈ a hell of a fight.
حربة *ḥarba* /n pl *-aat, ḥiraab*/ **1** spear, lance. ‖ *raas ḥarba* spearhead (literally and figuratively). **2** *[athl]* javelin.
حربى *ḥarbi* **1** /adj */ pertaining to war, military. *muraasil ḥarbi* war correspondent. *buliis ḥarbi* military police. *kulliyya ḥarbiyya* military academy. **2** /n pl *ḥarbiyyaat*/ that part of a water-pump which consists of a driving-shoe and filter.
حارب *ḥaarib* /vt/ to make war against. *ʔil-ʔatraak gayyiin yiḥarbu mʕaana l-ʔingiliiz* the Turks are coming to fight with us against the English. - vn *miḥarba*; ava *miḥaarib*.
محارب *muḥaarib* /n */ fighter. ‖ *ʔil-muḥaaribiin il-qudamaaʔ* war veterans.
اتحارب *ʔitḥaarib* /vi/ **1** to fight each other. **2** to be fought against. - ava/iva *mitḥaarib*.

ح ر ب [2]
حرّب *ḥarrab* <cf Icelandic> /vt/ *[naut]* **1** to frap. **2** to haul on (a rope etc.), pull (a rope etc.) taut. - vn *taḥriib*; ava/pva *miḥarrab*.
اتحرّب *ʔitḥarrab* /vi/ passive of *ḥarrab*. - iva *mitḥarrab*.

ح ر ب [3]
حربايّة *ḥirbaaya* /n pl *-aat*/ chameleon. ‖ *raagil ḥirbaaya* a-snake-in-the-grass.
محراب *miḥraab* /n pl *maḥariib*/ prayer niche in a mosque, mihrab.

ح ر ت
حرث، حرت *ḥarat (i, u)* /vt/ **1** to plough. *bi-niḥrit il-ʔarḍ[a] ḥart' rfayyaʕ* we plough the ground in close furrows. ‖ *ma-tiḥrit-ʃ' maʕaa* do not be rude to him. **2** *[constr]* to mix (concrete). - vn *ḥart, ḥarataan, ḥiraat*; ava *ḥaarit*; pva *maḥruut*.
حراتى *ḥiraati* /adj invar/ pertaining to, or cultivated on, ploughed land. ‖ *fuul ḥiraati* green broad beans.
حرّاث *ḥarraat* /n * and pl *ḥarraata*/ **1** *[constr]* workman who controls the shovel that is dragged through concrete to mix it. **2** ploughman.
محراث، محرات *miḥraat* /pl *maḥariit*/ **1** /n/ plough (see Pl.D, 8). **2** /adj/ oafish, stupid, thick.
اتحرث، اتحرت *ʔitḥarat* /vi/ **1** to be ploughed. **2** *[constr]* to be mixed (of concrete). - iva *mitḥirit*.
انحرث، انحرت *ʔinḥarat* = *ʔitḥarat*. - iva *minḥirit*.

ح ر ث see ح ر ت

ح ر ج

حرج *ħarag*[1]↓ *(i)* /vt/ to embarrass, put in a fix. - ava *miħrig*.

حرج *ħarag*[2] /n/ embarrassment. *ʕana f-ʁaayit il-ħarag* I feel terribly embarrassed.

اتحرج *ʔitħarag*↓ /vi/ to be embarrassed, be put in a fix. - iva *mitħirig*.

حرّج *ħarrag* /vt/ to make forbidden. *maama ħarragit ʕalayya ʕaṭlaʕ fooq is-suṭuuḥ* mother forbade me to go onto the roof. *ʔid-duktuur miħarrag ʕalayya l-malḥ* the doctor has forbidden me salt. - vn *taħriig*; ava *miħarrag*.

أحرج *ʔaħrag* /vt/ to embarrass, put in an embarrassing situation. *kunt*[a] *ʕaayiz ʔattihm-u quddaamak ʕaʃaan ʔaħrig-u* I wanted to accuse him in your presence in order to embarrass him. -/the literary passive also occurs/ *ʕana ʔuħragt*[i] *minnu* I was embarrassed by him. - vn *ʔiħraag*; ava *muħrig*; pva *muħrag*.

استحرج *ʔistaħrag*↓ /vi/ to have scruples (particularly on religious grounds). *bi-yistaħrag ħatta yaaxud ħaqq-u* he is even reluctant to take what is his right. - vn *ʔistiħraag*; ava *mistaħrag*.

ح ر ج ل

حرجلاتك *ħirgalaatak: ħirgalaatak birgalaatak ħalaqa dahab fi-wdanaat-ak* chant used in the ceremonies for a newborn child on *yoom is-subuuʕ*.

ح ر ج م

حرجم *ħargim* /vi/ to hover around, hang about (with intent to acquire s.th.). *huwwa miħargim ʕal-filuus* he has his eye on the money. - vn *ħargama*; ava *miħargim*.

اتحرجم *ʔitħargim* /vi/ (impersonal) passive of *ħargim*. *bint*[i] *ħilwa zayy*[i] *di laazim yikuun mitħargim ʕaleeha* a pretty girl like this must surely be the object of (a lot of people's) ambitions. - iva *mitħargim*.

استحرجم *ʔistiħargim*↓ = *ħargim*. - ava *mistiħargim*.

ح ر د

حرد *ħarad (i)* /vt/ **1** to cut in a curve (in dressmaking). **2** to train in manners, polish (s.o.). - vn *ħard, ħaradaan*; ava *ħaarid*; pva *maħruud*.

حردة *ħarda* /n pl *-aat*/ **1** /inst n/ a cut along a curve (in dressmaking). **2** woman's head-kerchief.

اتحرد *ʔitħarad* /vi/ **1** to be cut in a curve. **2** to be or become polished (of s.o). - ava/iva *mitħirid*.

انحرد *ʔinħarad* = *ʔitħarad*. - iva *minħirid*.

ح ر ر[1]

حرّر *ħarrar*[1] /vt/ **1** to write up, put in written form. *ħarrar if-ʃiik bi-sm-i* he made out the cheque to me. **2** to edit (a book, newspaper etc.). - vn *taħriir*; ava/pva *miħarrar*.

¶ *ħarrar ʕala* to aim at. *ħarrar il-bunduqiyya ʕaʃ-ʃagara w-ḍarab* he aimed the rifle at the tree and fired.

تحريرى *taħriiri* /adj invar/ written, in written form. *ʔimtiħanaat taħriri* written exams.

تحريرجى *taħrirgi* /n pl *-yya*/ *[obsol]* writer, letter-writer.

محرّر *muħarrir* /n */ editor.

اتحرّر *ʔitħarrar*[1] /vi/ **1** to be written up, be put in written form. **2** to be edited (of a book, newspaper etc.). - iva *mitħarrar*.

ح ر ر[2]

حرّ *ħurr* /adj/ **1** /pl *ʔaħraar, ħurriin*/ free, independent. *di balad ħurra* this is a free country. *huwwa ħurr*[i] *yiʕmil illi yiʕgib-u* he's free to do as he likes. *ʔinta ħurr* suit yourself (but bear the consequences)! *ʕumla ħurra* hard currency. **2** *[pol]* liberal. **3** noble, proud, of integrity. *nafs-u ħurra* or *damm-u ħurr* he's a proud soul, he's a man of integrity. ‖ *ʕeen il-ħurr*[i] *mzaan-u [prov]* the eye of the man of integrity is his (unfailing) judge. **4** genuine, authentic. *ʕuqd*[i] *luuli ħurr* a genuine pearl necklace.

حرّيّة *ħurriyya* /n pl *-aat*/ freedom. *nuqʕud feen ʕaʃaan nitkallim bi-ħurriyya* where can we sit and talk freely?

حرّر *ħarrar*[2] /vt/ to liberate. *fii ħadd*[i] *ʏer-na yħarrar bilad-na* is there anyone but us to liberate our country? - vn *taħriir*; ava *miħarrar*; pva *muħarrar*.

تحرير *taħriir* /n/ liberation. ‖ *(midaan) it-taħriir* Liberation Square, the main square in central Cairo. - *mudiriyyit it-taħriir* land reclamation area in the north-west Delta.

اتحرّر *ʔitħarrar*[2] /vi/ to be liberated. - iva *mitħarrar*.

متحرّر *mutaħarrir* /adj */ free-thinking.

ح ر ر[3]

حرّ *ħarr*[1] *(i)* /vt/ **1** to make (s.o.) hot. *ʔibʕid ʃiwayya ħarret-ni* move away a little, you've made me hot. **2** to make angry. *ʕana maħruur minnu* I am angry with him. - vn *ħararaan*; ava *ħaarir*; pva *maħruur*.

حرّ *ħarr*[2] /n/ heat. *fi-ʕizz il-ħarr* at the peak of the heat. -/adjectivally/ *ʔid-dunya ħarr* the weather is hot.

حارّ *ħarr*[3], *ħaar* /adj/ **1** hot (in temperature). ‖ *ħaar wi-naar (wi-ʏaḍab il-gabbaar)* curse on one who makes an unfair or dishonest profit ≈ may his wellbeing turn to hellfire! **2** hot (in taste). *filfil ħarr* hot pepper(s). ‖ *zeet*

ħaar linseed oil. **3** fervent, warm, ardent. ‖*ganaaza ħarra wil-mayyit kalb* ≈ much ado about nothing.

حرّان *ħarraan* /adj */ hot (of animals and people). *fi-ʕaʁusṭus il-waaħid yibqa ħarraan ṭuul in-nahaar* in August one is hot all day long.

حرارة *ħaraara* /n/ **1** heat. ‖*waraq ħaraara* asbestos. **2** temperature. *mizaan ħaraara* thermometer. *ʕandu ħaraara* he has a (high) temperature. **3** fervour, warmth, ardour. *sallim ʕalayya b-ħaraara* he greeted me warmly. ‖*ma-ʕanduu-ʃ ħaraara* he has no go, he's a wet blanket. **4** rash. *ʔil-ħaraara lli f-wiʃʃ-u natarit ʕala gism-u kull-u* the rash on his face spread to his whole body. **5** electric current (only with respect to the telephone system). *ma-qdirt'-ʃ ʔattiṣil biik - ma-kan-ʃ' fii ħaraara* I couldn't phone you - the line was dead.

حرارى *ħaraari, ħaraari* /adj/ thermal, thermo-. - *ʔit-tasbiit il-ħaraari* thermo-setting. *miʕalga ħarariyya* heat treatment. ‖*suʕr[a] ħaraari* calorie.

احرّ *ʔiħarr* /vi/ **1** to be made hot (of people). **2** to be made angry. - iva *mitħarr*.

انحرّ *ʔinħarr* /vi/ **1** to lose one's temper. *ʔana b-anħarr' min il-kalaam il-faariʁ da* I get angry with this nonsense. **2** to be made to feel hot. - ava/iva *minħarr*.

احترّ *ʔiħtarr* /vi/ **1** to feel hot. **2** to get angry. *ya ʃarr iħtarr* anger took control, as in *qaʕadu yitʕatbu w-ya ʃarr iħtarr' qarabu baʕq* they went on arguing until tempers were lost and they hit one another. - ava *miħtarr*.

[4] ح ر ر

حرير *ħariir* /n pl *ħaraayir*/ silk, (loosely also) any silky material. *ħariir ʃarf* furnishing fabric with a silk-like finish.

حريرى *ħariiri* /adj/ silky.

حرايرى *ħarayri* /n pl *-yya*/ **1** silk merchant. **2** silk maker. — /adj/ **3** silky, silken. *qumaaʃ ʕala ħarayri* a silky type of cloth.

حرّر *ħarrar*[3] /vt/ *[text]* to give a silk-like finish to. - vn *taħrir*; ava/pva *miħarrar*.

[5] ح ر ر

حرّ *ħarr* sound made to urge a donkey ≈ gee-up! - also *ħaa, ħaa*.

ح ر ز

حرز *ħirz* /n pl *ʔaħraaz*/ **1** sealed depository for items of evidence in a criminal case. **2** amulet.

حرّز *ħarraz* /vt/ to put (an item of evidence) into a sealed depository. - vn *taħriiz*; ava/pva *miħarraz*.

انحرّز *ʔinħarraz* /vi/ to be put into a sealed depository (of criminal evidence). - iva *mitħarraz*.

أحرز *ʔaħraz* /vt/ to be in or come into possession of (especially s.th. illegal). *ʔiħraaz silaaħ [leg]* illegal possession of arms. - vn *ʔiħraaz*; ava *muħriz*.

ح ر س

حرس *ħaras', ħaras (u, i)* /vt/ to guard, protect. *ʔik-kalb' b-yuħrus il-firaax min il-ʕirsa* the dog protects the chickens from weasels. *rabb-i-na yuħrus-u [women]* God bless him! ‖*(ʔism) in-nabi ħars-u [women in trad soc]* may the Prophet's name protect him! (used with or instead of a child's name to ward off the evil eye). - vn *ħiraasa*; ava *ħaaris, ħaaris*; pva *maħruus*.

حارس *ħaaris* /n pl *ħurraas*/ guard, watchman.

محروس *maħruus* /adj */ guarded, protected (especially from evil). *ʕaruusa ħilwa mil-ʕeen maħruusa* a lovely bride safeguarded from the evil eye. *maħruus (wi-munṣaan) [women in trad soc]* guarded and safe (from the evil eye)! (used with or instead of the name of a child). ‖*ʔizzayy il-maħruus* how's your little son (may God protect him)?

حرس *ħaras*[2] /n/ escort, guard. *ħaras ʃaraf* guard of honour. *ʔil-ħaras il-gumhuuri* the Presidential Guard.

اتحرس *ʔitħaras* /vi/ to be guarded or protected. - iva *mitħiris*.

حرّس *ħarras* **1** /vi/ to be on one's guard. *laazim niħarras minnu* we must beware of him. **2** /vt/ to set (s.o.) as a guard. *ħarrasuu ʕala l-maxzan* they made him a guard over the warehouse. - vn *taħriis*; ava/pva *miħarras*.

اتحرّس *ʔitħarras* /vi/ to be set as a guard. - iva/pva *mitħarras*.

¶ *ʔitħarras ʕala* to keep under guard. *ʔil-buliiṣ itħarras ʕalee* the police put him under guard.

احترس *ʔiħtaras* /vi/ to be on one's guard. *ʔiħtiris min it-taʕabiin* watch out for snakes! - vn *ʔiħtiraas*; ava *miħtiris*.

ح ر ش

حرس *ħirf* /coll n/ melon(s) which never reach ripeness on the plant.

حرشة *ħirfa* /pl *-aat*/ unit noun of *ħirf*.

حرشاية *ħirfaaya* = *ħirfa*.

حرس *ħirif* /adj/ **1** rough, coarse. *ramla ħirfa* coarse sand. **2** savoury and appetizing (of food).

حرّش *ħarraf* **1** /vi/ to eat savoury food as an appetizer. **2** /vt/ to make rough or coarse. - vn *taħriif*; ava *miħarraf*.

اتحرّش *ʔitħarraf*↑ /vi/ to act provocatively, pick a quarrel. - vn *taħarruf*; ava *mitħarraf*.

ح ر ش ف
حرشف *ħarfaf* /vt/ to cause to feel rough. *ʕakl il-xarfuuf bi-yħarfif il-buqq* eating artichokes makes one's mouth feel rough. - ava/pva *miħarfif*.
حراسيف *ħarafiif* /pl n/ scales (of, e.g., a fish, a crocodile).

ح ر ص
حرص *ħaraṣ (i, u)* /vi/ to be on one's guard, take care. - vn *ħirṣ*; ava *ħaariṣ*.
حرص *ħirṣ↑* /n/ **1** care, solicitude. **2** meanness.
حريص *ħariiṣ* /adj */ careful, solicitous. *laazim il-waaħid yikuun ħariiṣ ɛala siqat il-ɛamiil* one must be careful to retain the client's trust.
أحرص *ʔaħraṣ* /el/ more/most careful or solicitous.
حرّص *ħarraṣ* /vi/ to take care, be careful. *ħarraṣ ɛala l-filuus laħsan titnifil* watch out for your money or it will be pinched. *ħarraṣ min ṣaħb-ak wala txawwin-uu-f [prov]* don't be too trusting with your friend or you will find yourself questioning his honesty. - vn *taħriiṣ*; ava/pva *miħarraṣ*.
اتحرّص *ʔitħarraṣ = ħarraṣ*. - ava *mitħarraṣ*.
استحرص *ʔistaħraṣ* /vi/ to be on one's guard, take care. *ʔistaħraṣ ɛal-filuus* look after the money. *ʔistaħraṣ mil-kilaab* beware of the dogs. - vn *ʔistiħraaṣ*; ava *mistaħraṣ*.

ح ر ض
حرّض *ħarraḍ* /vt/ to provoke, incite. *ɛanaaṣir min barra g-gamɛa ħarraḍu ţ-ţalaba ɛal-muẓahraat* elements from outside the university put the students up to the demonstrations. - vn *taħriiḍ*; ava *miħarraḍ*.
اتحرّض *ʔitħarraḍ* /vi/ to be provoked, be incited. - iva *mitħarraḍ*.

ح ر ف [1]
حرف *ħarf[1]* /n pl *ħuruuf, ʔuħruţ*/ **1** letter (of the alphabet). *min ħarf il-ʔalif ʔila ħarf il-yaa ʔ* ≈ from A to Z. *ẓawya ħarf[i] tih* T-square. ‖*wala ħarf* don't say a word! **2** musical note. *ʔil-maqaam da b-yibtidi b-ħarf[i] dooh* this scale begins with doh.
حرفي *ħarfi* /adj */ **1** literal. *targama ħarfiyya* literal translation. **2** literal-minded, pedantic, pernickety.
¶ *ħarfiyyan* /adv/ literally.
حرفيّة *ħarfiyya* /n/ literalness. *ħarfiyyit il-qanuun* the letter of the law.

ح ر ف [2]
حرف *ħarf[2]* /n pl *ħuruuf, ʔuħruf*/ edge. *ħarf il-maktab* the edge of the desk.
انحرف *ʔinħaraf* /vi/ **1** to become corrupt, become deviant. **2** to become defective. *maẓaag-u munħarif* he's out of sorts, he's not himself. - vn *ʔinħiraaf*; ava *munħarif*.
انحراف *ʔinħiraaf* /n pl *-aat*/ **1** deviation. **2** deflection.
حرّف *ħarraf* /vt/ **1** to change the meaning of. *ma-tħarraf-f il-kalaam* don't twist what has been said. **2** to place on the edge (e.g., of a table). *ʔil-fingaan miħarraf* the cup is right at the edge (of the table). - vn *taħriif*; ava/pva *miħarraf*.
اتحرّف *ʔitħarraf* /vi/ **1** to be changed in meaning. **2** to be placed at the edge (of, e.g., a table). - iva *mitħarraf*.

ح ر ف [3]
حرفة *ħirfa* /n pl *ħiraf*/ trade, (skilled) craft. *ʔibn[i] ħirfa* a (good) craftsman.
حرفي *ħirafi* /adj * and pl *-yya*/ skilled, expert (at a particular trade).
حرّيف *ħarriif* /n pl *ħarriifa*/ expert, master. *da ħarriif kutfiina* he's an expert at cards.
احترف *ʔiħtaraf* **1** /vt/ to practise (a profession). *bi-yiħtirfu qiraayit il-qurʔaan* they practise Koran-reading as a profession. **2** /vi/ to become a professional. *kaan haawi w-baɛdeen iħtaraf* he was an amateur and then turned professional. - vn *ʔiħtiraaf*; ava *muħtarif*.
محترف *muħtarif* /n */ professional.

ح ر ف [4]
حرافة *ħaraafa* /n/ pungency, piquancy (of taste).
حرّيف *ħirriif* /adj/ spicy, piquant, pungent.

ح ر ف ن
حرفنة *ħarfana* /n/ skill, expertise. *di s-siwaaqa ħarfana* driving is a matter of skill.
اتحرفن *ʔitħarfan* /vi/ to act the professional, act the expert. - ava *mitħarfan*.

ح ر ق
حرق *ħaraq (a)* /vt/ **1** to burn. *bi-nigmaɛ il-waraq wi-niħraq-u f-goora barra* we collect the leaves and burn them in a pit outside. ‖*bi-yiħraq id-damm* it is infuriating, it makes one's blood boil. *-ya rabb[i] ma-tiħraq-f[i] qalb-i ɛalee [women]* ≈ O Lord, don't make me suffer by his death (expressing concern for one in danger). *-ħaraq-lu l-ʔaxdareen [abus]* he insulted him vilely. **2** to fire (ceramics). *b-yiħraq iţ-ţawaagin fi-furn[i] maxṣuuṣ* he fires the casseroles in a special oven. **3** to cause a stinging sensation to (s.o.) or in (s.th.). *ʔil-marham da b-yiħraq il-ɛeneen* that ointment makes the eyes sting. **4** to frustrate (e.g., a plan).

ħaraq-li n-nukta he spoiled my joke (by giving away the punch line). *ħaraq iz-zahr* he had a good throw of the dice and wasted it (in backgammon). — /vi/ **5** to burn. ‖*qanaabil ħarqa* incendiary bombs. **6** to smart, sting, cause a burning sensation. *ʕeen-i b-tiħraq* my eye smarts. - vn *ħarq, ħariiq, ħaraqaan*; ava *ħaariq*; pva *maħruuq*.

حرق *ħarq* /n pl *ħuruuq*/ *[path]* burn.

حريق *ħariiq*↑ /n pl *ħaraayiq*/ conflagration, fire. *ṭaffaayit ħariiq* fire-extinguisher. *wabuur ħariiq* fire-engine. *ħanafiyyit ħariiq* fire-hydrant.

حريقة *ħariiqa* /n pl *ħaraayiq*/ conflagration, fire.

حرقان *ħaraqaan* /n/ burning sensation. *ħaraqaan il-qalb* (1) heartburn. (2) misery. *ħaraqaan il-bool [path]* burning sensation in the urinary tract.

حرقة *ħurqa* /n/ intense mental or emotional pain. *bi-tʕayyaṭ bi-ħurqa* she's crying bitterly.

حرّاق *ħarraaq* /adj/ hot, peppery, pungent (of food). *filfil ħarraaq* hot pepper(s). ‖*ʔil-ħubbª ħarraaq* love makes the heart suffer. - *taman ħarraaq* an exorbitant price.

حرّيقة *ħurreeqa* /n pl *ħarariiq*/ blister.

اتحرق *ʔitħaraq* /vi/ **1** to be burnt. *kunt' sayba l-laħma fil-butagaaz lamma tħaraqit wi-baqit faħm* I had left the meat in the oven till it burnt to charcoal. *ʔik-kumm itħaraq minni* I burnt the sleeve by mistake. ‖*ʔaʕṣaab-i tħaraqit* my nerves are frazzled. **2** to be fired (of ceramics). **3** to be frustrated, misfire (of, e.g., a plan). ‖*ʔil-xabar itħaraq* the news leaked out (before its official release). - iva *mitħiriq*.

انحرق *ʔinħaraq* = *ʔitħaraq*. - iva *minħiriq*.

التحاريق *ʔit-taħariiq* /n/ (hot season of) the Nile's lowest water level.

حرّق *ħarraq* **1** /vt/ to burn (s.th.) several times or in several places. **2** /vi/ to burn with passion or lust, suffer intense emotional pain. - vn *taħriiq*; ava/pva *miħarraq*.

اتحرّق *ʔitħarraq* /vi/ **1** to be burnt several times or in several places. **2** to suffer intense emotional pain. - ava/iva *mitħarraq*.

ح ر ك

حرك *ħirik* /adj */ dynamic, on-the-ball, quick-witted. *kaan nifs-i ʔabqa zayy-u milaħlaħ wi-mdardaħ wi-ħirik w-aʕallaq ʔayyuha waħda* I wanted to become like him, glib, outgoing, quick-witted and able to hook any girl.

حركة *ħaraka* /n pl *-aat, -aat*/ **1** movement, motion, activity. *ʕamalit-li ħaraka b-ʕen-ha w-fihimt' qaṣd-a-ha ʔeeh* she winked at me and I understood what she wanted to get across. *waqt il-muulid id-dakakiin tibqa fiiha ħaraka* during the *muulid* the shops are busy. *ħarakaat ʔarḍiyya [gym]* floor exercises. *min il-ħaraka [athl]* from a running start. ‖*qism il-ħaraka* (1) transport section (of a company etc.). (2) *[communic]* operation control section. **2** movement, fluctuation. *ħarakit il-beeʕ* the fluctuation in sales. *ħarakit il-ħisaab* (record of) fluctuation in a bank account. **3** movement (as a social, political or artistic phenomenon). *ʔil-ħaraka l-waṭaniyya* the nationalist movement. **4** trick, deception. *ʕamal fiyya ħaraka xallaa-ni trafadt* he played a dirty trick on me and got me fired. **5** *[mus]* movement. **6** group or annual promotions, appointments etc. for the civil service, diplomatic corps and other official bodies.

حركي *ħaraki* /adj */ pertaining to a *ħaraka*. ‖*ʔism' ħaraki* code-name, nom de guerre.

حرّك *ħarrak* /vt/ **1** to move. *mif qaadir ʔaħarrak diraaʕ-i* I can't move my arm. *qiwwit id-dafʕ illi bi-tħarrak il-bistim* the driving force that moves the piston. ‖*ħarrak il-mumassiliin [theat]* to block a play. **2** to arouse, stimulate, move (emotionally). **3** to stir, agitate. *ħarrak if-faay* stir the tea! - vn *taħriik*; ava/pva *miħarrak*.

تحريكة *taħriika* /inst n, pl *-aat*/ a movement.

محرّك *muħarrik* /n pl *-aat*/ **1** motor. *muħarrikaat id-diizil* diesel engines. **2** propeller.

اتحرّك *ʔitħarrak* /vi/ **1** to move. *ma-titħarrak-f' min hina l-vaayit m-argaʕ* don't move from here till I get back! **2** to be moved. *ʔil-kursi tħarrak min makaan-u* the chair has been moved from its place. - vn *taħarruk*; ava/iva *mitħarrak*.

تحرّك *taħarruk* /n pl *-aat*/ *[mil]* (troop) movement.

متحرّك *mutaħarrik*↑ /adj/ moveable, mobile. *sillim mutaħarrik* escalator. ‖*kursi mutaħarrik* wheelchair.

ح ر ك ر ك

حركرك *ħurukruk: ʕala l-ħurukruk* barely, only just, as in *nigiḥt' bassª ʕala l-ħurukruk* I passed, but only by the skin of my teeth.

ح ر ك ش

حركش *ħarkiʃ* /vt/ to agitate, excite, thrill, stir. - vn *ħarkaʃa*; ava/pva *miħarkiʃ*.

اتحركش *ʔitħarkiʃ* /vi/ to be agitated, be excited, be thrilled, be stirred. - iva *mitħarkiʃ*.

ح ر م

حرم *ħurum (a)* /vi/ to be forbidden. *ʔin kaan il-beet ʕaayiz zeet yiħram ʕala g-gaamiʕ [prov]* ≈ charity be-

gins at home. *ħurmit ɛaleek ɛiʃt-ak [abus]* may you be deprived of your life! (abusive reply to *ħaraam* or *ħaraam ɛaleek*). - ava *ħarmaan*.

حرم *ħaram[1] (i)* /vt/ **1** to deprive. *ma-txalaq-ʃ illi yiħrim-ni minku* the person who could take me away from you has yet to be born. **2** *[Chr]* to excommunicate. - vn *ħirmaan*; ava *ħaarim*; pva *maħruum*.

حرم *ħarm* /n/ *[Chr]* excommunication.

حرمة *ħurma* /n/ **1** /pl *-aat/ [trad soc, abus]* woman. **2** /no pl/ sanctity, inviolability. *ʃil-buyuut laha ħurma* ≈ every man's home is his castle.

حرم *ħaram[2]* /n/ **1** /fem and masc/ wife. *ħaram-i l-munṣaana* (or *l-maṣuun*) ≈ my respected wife. **2** *[Isl]* sacred enclave (as at Mecca and Jerusalem). *ʃil-ħaram iʃ-ʃariif* the sacred enclave at Mecca.

¶ *ħaraman [Isl]* a greeting to one who has just finished his prayers (i.e. may we pray some day in *ʃil-ħaram iʃ-ʃariif*). - *ʃil-ħarameen* the cities of Mecca and Medina.

حرملك *ħaramlik* /n/ *[obsol]* women's quarters in a traditional upper-class house.

حرام *ħaraam* **1** /n/ forbidden thing (especially in Islam). *ʃaṣuum w-aṣalli w-m-akul-ʃ[i] bil-ħaraam ʃabadan* I fast and pray and never accept tainted money. *huwwa ħaraam lamma ʃastarayyaħ ʃiwayya* is it a crime if I take a little rest? ‖ *da ħaraam - ʃana kunt[i] naayim* it's too bad, I was asleep! - *ʃibn[a] ħaraam* bastard. **2** /adj invar/ illegal, illicit. *ʃil-maal il-ħaraam* ill-gotten gains. ‖ *xilfa ħaraam* ≈ little bastards. **3** modal of reproach. *ħaraam (ɛaleeku) tinsuu-ni bil-marra* what a shame for you to forget me completely! ‖ *ħaraam ɛaleek* shame on you! have a heart!

حرام *ħiraam* /n pl *ħiríma/* coarsely woven woollen blanket, rug or wrap.

حرامى *ħaraami* /n pl *-yya/* thief. ‖ *ɛaskar* (or *ɛasaakir) wi-ħaramiyya* cops and robbers (children's game). *-ħaraami l-ħalla* large black ant.

حريم *ħariim* /n/ **1** women's quarters (in a traditional house). **2** /coll/ women. *ɛumr-u ma-ʃaaf ħariim* (1) he has never had anything to do with women. (2) he is sexually frustrated.

حريمى *ħariimi* /adj invar/ pertaining to women. *manadiil ħariimi* ladies' kerchiefs.

اتحرم *ʃitħaram* /vi/ **1** to be deprived. *ʃilaah-i m-atħirim minha* O God, may I never lose her! **2** *[Chr]* to be excommunicated. - iva *mitħirim*.

انحرم *ʃinħaram* = *ʃitħaram*. - iva *minħirim*.

حرّم *ħarram* /vt/ **1a** *[Isl]* to declare to be *ħaraam* (q.v.). *bi-yħarramu n-nibiit* they consider wine *ħaraam*. **1b** to forbid, prohibit. *baaba mħarram ik-kutʃiina fil-beet* Daddy has forbidden card-playing in the house. **2** to dissuade (s.o. from doing s.th. shameful). *laazim ʃaħarram-u yisraq taani* I must get him to stop stealing. — /preverb/ **3** to heed the (bad) results (of doing s.th.), be warned off (doing s.th.). *ʃinta ma-ħarramt[i]-ʃ tiɛaakis il-bint[i] di* haven't you learnt your lesson and stopped teasing that girl? *ɛamalt[i] kida ɛaʃaan tiħarram tibuus il-xaddaama* I did that so that you stay away from kissing the maid. ‖ *lissa ma-ħarramt[i]-ʃ* haven't you wised up yet? haven't you learnt your lesson yet? - vn *taħriim*; ava/pva *miħarram*.

محرّم *muħarram* /n/ Muharram, first month of the Muslim year.

اتحرّم *ʃitħarram* /vi/ **1** *[Isl]* to be declared *ħaraam* (q.v.). **2** to be forbidden, be prohibited. ‖ *ʃilli f-ʃiid-u mitħarram ɛalee* he's so miserly he can't enjoy his wealth. **3** to be dissuaded (from doing s.th. shameful). - iva *mitħarram*.

أحرم *ʃaħram* /vi/ *[Isl]* to put on the dress of a pilgrim to Mecca. - vn *ʃiħraam*; ava *muħrim*.

إحرام *ʃiħraam* /n/ *[Isl]* **1** state of ritual preparedness of a pilgrim in Mecca. **2** garments worn while on pilgrimage to Mecca.

احترم *ʃiħtaram* /vt/ to respect. *ʃiħtirim nafs-ak* have some self-respect (i.e. behave yourself)! - vn *ʃiħtiraam*; ava *miħtirim*; pva *muħtaram*.

احترام *ʃiħtiraam* /n/ respect. *laazim tiɛaamil waldit-ak bi-ħtiraam* you should treat your mother with respect.

احترامات *ʃiħtiramaat* /pl n/ respectful greetings. *baɛd is-salamaat wil-iħtiramaat* after giving greetings and paying respects.

محترم *muħtaram* /adj */ **1** respectable. *raagil muħtaram ma-yiɛmil-ʃ[i] kida* a respectable man would not do such a thing. ‖ *ya muħtaram [trad soc]* polite form of address to a man (also used sarcastically and jokingly). **2** good, of good quality or quantity. *haat itneen kiilu laħma muħtarama* go and buy two kilos of first-rate meat. *kalt[i] kimmiyya muħtarama* I ate a good amount.

استحرم *ʃistaħram* /vt/ to consider forbidden or shameful. - vn *ʃistiħraam*; ava *mistaħram*.

(ح ر م ل)

حرمل *ħarmal* /n/ African rue (Perganum harmal) (the seeds of which are used as incense).

حرملة *ħarmala* /n pl *-aat/* loose wrap, shawl.

ح ر ن

حرن *ħaran, ħaran, ħurun, ħirin (i, a, u)* /vi/ **1** to lose one's temper, become angry. *bi-tiħran ɛalayya kida leeh* why are you getting annoyed with me? **2** to balk, be

refractory. *ʕil-ħuṣaan ga ɛand il-mayya w-ħaran* the horse got as far as the water and balked. *xayfa ɛalafaan ibn-i b-yiħran ɛala* (or *ɛan*) *l-bizz* I'm worried because my child refuses the breast. - vn *ħarna*; ava *ħaarin, ħarnaan*.

حرون *ħaruun* /adj invar/ **1** morose, sulky, petulant. **2** recalcitrant, restive (of a riding animal).

ح ر ن ك ش

حرنكش *ħarankaʃ* /coll n/ Cape gooseberries.

ح ر ى

اتحرّى *ʔitħarra* **1** /vt/ to intend, aim at. *yitħarra l-ʃamaana* he strives to be honest. **2** /vi/ to make an investigation. *laazim nitħarra ɛan il-muʃkila qabl' ma nuħkum fiiha* we must investigate the problem before passing judgement. - vn *taħarri*; ava *mitħarri*.

تحرّى *taħarri* /n pl *taħarriyyaat*/ investigation. *bituuɛ il-mabaaħis ɛamalu taħarriyyaat* the detectives made investigations. - /adverbially/ *ʔil-buliiṣ xaduu taħarri* the police took him in for investigation.

ح ز ب

حزب *ħizb* /n pl *ʔaħzaab*/ **1** political party. *niẓaam il-ħizb il-waaħid* one-party system. **2** *[Isl]* **2a** one of the sixty parts of the Koran. **2b** group of prayers known to have been recited by a pious person, and whose subsequent recital is therefore praiseworthy. *ħizb il-baħr* a group of such prayers particularly recited when travelling by sea.

حزبى *ħizbi* /adj/ of or pertaining to a political party.

اتحزّب *ʔitħazzib* /vi/ to take sides, become an adherent. - vn *taħazzub*; ava *mitħazzib*.

متحزّب *mitħazzib* /adj */ partisan, biased.

ح ز ر [1]

حزّورة *ħazzuura* /n pl -*aat*/ riddle, puzzle.

حزّر *ħazzar'* /vi/ to guess. *ħazzar fazzar* make a guess! - ava *miħazzar*.

ح ز ر [2]

حذر *ħizir↑ (a)* /vi/ to be vigilant, be on one's guard. *ʔil-ħazar ma-yimnaɛ-ʃ' qadar [prov]* no amount of vigilance can forestall fate. - vn *ħazar*; ava *ħaazir*; pva *maħzuur*.

حذّر *ħazzar*[2] /vt/ to warn. - vn *taħziir*; ava *miħazzar*.

اتحذّر *ʔitħazzar* /vi/ to be warned. - iva *mitħazzar*.

حاذر *ħaazir↑* /vi/ to be vigilant, be on one's guard. *ħaazir min ik-kalb' da* watch out for that dog! - vn *miħazra*; ava *miħaazir*.

ح ز ز

حزّ *ħazz'* *(i)* /vt/ **1** to score, make an incision in. *ħazz il-ɛaṣaaya ɛaʃaan yiksar-ha* he scored the stick so that he could break it. *ħazz' raqabt-u* he slit his throat. **2** to trim. - vn *ħazz, ħazazaan*; ava *ħaaziz*; pva *maħzuuz*.

¶ *ħazz' f-nafs-(u)* to hurt (s.o.), offend (s.o.). *ħazz' f-nafs-i ʔinnu yiigi l-balad wi-ma-yfut-ʃ' ɛalayya* it hurt me that he came to town and didn't drop in to see me. - *ħazz*[a] *ɛala ... ʔid-diħk* a fit of laughter gripped ..., as in *lamma ftakart in-nukta lli qult'-haa-li ħazz*[a] *ɛalayya d-diħk* when I remembered the joke you told me I was seized by a fit of laughter.

حزّ *ħazz*[2] /n pl *ħuzuuz*/ **1** incision, slit. **2** section of sugar cane.

حزّة *ħazza* /n pl -*aat*/ incision, slit.

حزازة *ħazaaza* /n/ ill-feeling, hostility. *fii ħazaaza benna* there's bad blood between us.

اتحزّ *ʔitħazz* /vi/ to be incised. - iva *mitħazz*.

حزّز *ħazziz* /vt/ to slit, score, make an incision in (s.th.) several times or in several places. - vn *taħziiz*; ava/pva *miħazziz*.

اتحزّز *ʔitħazziz* /vi/ to be slit or scored several times or in several places. - iva *mitħazziz*.

ح ز ق

حزق *ħazaq, ħiziq (a)* /vt/ **1** to corner, put in a tight spot, put pressure on. *ħazaqt-u xadt' minnu l-filuus* I cornered him and got the money off him. **2** to take short. *ħazaq-ni d-diħk* I couldn't control my laughter. *ʔiʃ-faxxa ħazaqit-u* he badly needed to go to the lavatory. **3** to tighten. *ħazaq ir-rubaaṭ* he tightened the lace. — /vi/ **4** to bear down, contract the abdominal muscles (e.g., to defecate or give birth). - vn *ħazq, ħazaqaan*; ava *ħaaziq*; pva *maħzuuq*.

حزقة *ħazqa* /pl -*aat*/ instance noun of *ħazq*.

اتحزق *ʔitħazaq* /vi/ passive of *ħazaq*. - iva *mitħazaq*.

حزّق *ħazzaq* /vt/ to tighten very much or in several stages. *hiduum-u mħazzaqa* his clothes are very tight. - vn *taħziiq*; ava/pva *miħazzaq*.

اتحزّق *ʔitħazzaq* /vi/ to be tightened very much or in several stages. - iva *mitħazzaq*.

ح ز م

حزم *ħazam (i)* /vt/ to bundle, tie in a bundle. - vn *ħazm, ħazamàan*; ava *ħaazim*; pva *maħzuum*.

حزم *ħazm* /n/ firmness, strictness. *ʔil-ħazm' miʃ maɛnaa il-qaswa* strictness doesn't mean cruelty.

حزمة *ħizma* /n pl *ħizam, ħizmaat*/ bundle, bunch.

حزام *ħizaam* /n pl *ʔiħzima, ħizíma*/ **1** belt. ‖*ħizaam baladi* silk cummerbund. **2** saddle girth. **3** centre band

of a tennis net. **4** wooden frame of a wrestling floor. **5** decorative rib on the spine of a book.

حزام *ḥuzaam* /n/ *[mus]* mode in Arabic music beginning on E flat having A flat.

حزّم *ḥazzim* /vt/ **1** to tie successively in bundles. **2** to tighten (a belt). **3** to put a scarf or the like on (s.o. preparatory to his or her performing a belly-dance). **4** to wrap a belt round, put a belt on (s.th. or s.o.). ‖*ʕuqdit taḥziim barmiil* barrel belt hitch. - vn *taḥziim*; ava/pva *miḥazzim*.

تحزيمة *taḥziima* /pl *-aat*/ instance noun of *taḥziim*.

اتحزّم *ʔitḥazzim* /vi/ **1** to be tied successively into bundles. **2** to be tightened (of a belt). **3** to tie a scarf around one's hips preparatory to performing a belly-dance. **4** to put on a belt or have a belt put on. - ava/iva *mitḥazzim*.

ح ز ن

حزن *ḥizin (a)* /vi/ **1** to become sad. *ḥizint[a] ʕalee lamma ʃuft[a] ḥalt-u* I grieved for him when I saw the state he was in. **2** to mourn, go into mourning. - vn *ḥuzn*; ava *ḥaznaan*.

¶ *la ... wala yaḥzanuun* neither ... nor anything at all. *la liqyu ḥaraami wala yaḥzanuun* they didn't find a thief or anything of the sort. *la lu maal wala yaḥzanuun* he has nothing to his name.

حزن *ḥuzn, ḥizn* /n pl *ʔaḥzaan*/ sorrow, grief. *kutr il-ḥuzn[i] yʕallim il-buka [prov]* much grief teaches one to weep. — /no pl/ **2** mourning. *muddit il-ḥuzn* the period of mourning.

حزين *ḥaziin* /adj pl *ḥazaana*/ **1** sad, sorrowful. *ʕalb-i ḥaziin* I'm unhappy. *gat il-ḥaziina tifraḥ ma-laʕit-ʃ[i] laha maṭraḥ [prov]* ≈ one who is born to suffer will find no opportunity to rejoice. ‖*ʔig-gumʕa l-ḥaziina [Chr]* Good Friday. **2** in mourning.

حزايني *ḥazayni* /adj invar/ gloomy, doleful. *navama ḥazayni* a sad tune.

محزنة *maḥzana* /n/ **1** mourning, state of mourning. *fi-balad-na l-maḥzana lir-riggaala win-niswaan talatt iyyaam* in our town mourning for both men and women lasts three days. **2** place of mourning.

حزّن *ḥazzin* /vt/ to make sad, grieve. *manẓar-hum yiḥazzin* the sight of them makes one grieve. - vn *taḥziin*; ava/pva *miḥazzin*.

اتحزّن *ʔitḥazzin* /vi/ to be made sad, be grieved. - iva *mitḥazzin*.

ح ز ى

حذاء *ḥiza* **1** /n/ *[mil]* straight ranking. *ʔuqaf fil-ḥiza* line up with the others! **2** /adv/ *[mil]* in line, abreast. *ʔil-ʕasaakir waqfiin ḥiza* the soldiers are standing in line.

حدا، حذا *ḥada[3], ḥida[1]* /w pron suff *ḥidaa-* (1st pers sing *ḥadaaya*)/ preposition indicating location (cf Latin *apud*, Fr *chez*, and *ʕand* 1). *ʔil-bitt illi qaʕda ḥdaak* the girl sitting next to you. *ʔitneen min ḥadaana* two of our people. *tilaqii-ha ḥida l-xuḍariyya* you'll find it at the greengrocer's.

حاذى *ḥaaza [mil]* **1** /vt/ **1a** to make (soldiers) stand in line. *ḥaazi l-ʕasaakir di* have these soldiers stand in straight lines. **1b** to stand in line with. *ḥaazi l-ʕaskari lli ganb-ak* line up with the soldier beside you. **2** /vi/ to dress ranks. - vn *ḥiza, miḥaziyya*; ava *miḥaazi*.

اتحاذى *ʔitḥaaza* /vi/ *[mil]* **1** to dress ranks. **2** to be stood in line with. - ava/iva *mitḥaazi*.

ح س ب

حسب *ḥasab[1] (i)* /vt/ **1** to calculate, reckon. *bi-yiḥsib it-taḥmiil ʕala l-ʕimdaan* he calculates the load on the pillars. *lamma b-tiigi tiḥsib-lu ḍ-ḍaraayib ...* when you come to reckon his taxes .... **2** to consider, regard. *laazim tiḥsib ḥisaab lin-naas* you must take (other) people into consideration. *ma-b-aḥsib-kum-ʃ[i] riggaala* I don't regard you as men. **3** to think, believe, be under the impression that. *ḥasabt-u-kum xaragtu* I thought you'd gone out. *ʔilli ḥasabt-u laqeet-u* I found things to be just as I had expected. - vn *ḥisaab*; ava *ḥaasib*; pva *maḥsuub*.

حساب *ḥisaab* /n/ **1** /vn/ ‖*bi-ḥsaab* carefully, cautiously, as in *b-aakul bi-ḥsaab ʕaʃaan m-atxan-ʃ* I eat cautiously so that I won't get fat. - *min ɣeer ḥisaab* (1) incautiously, recklessly. (2) in great abundance. - *ʕamal ḥisaab* to take into account, consider, as in *ʔiʕmil ḥisaab illi waraak* have some thought for those behind you! *ʔinta ma-b-tiʕmil-ʃ[i] ḥsaab li-ḥadd* you don't give a damn about anyone. *raagil yitʕimil-lu ḥsaab* a man to be reckoned with. **2** /pl *-aat*/ account, bill. *ḥisaab gaari* current account. *ʔidaarit il-ḥisabaat il-ʕamma* accounts office. *ʕala ḥsaab-u* at his expense. *ʔiddeet-u ḥsaab-u* I paid him (what was due to him). ‖*ṣarf[i] taḥt il-ḥisaab* payment on account. - *kull-u bi-ḥsaab-u* everything has it's price. - *bi-yiftaɣal li-ḥsaab-u* he is self-employed. **3** /no pl/ arithmetic.

حسابي *ḥisaabi* /adj/ **1** of or pertaining to calculating or arithmetic. *ʔalaat ḥisabiyya* calculating machines. ‖*ʕumla* (or *gineeh*) *ḥisaabi* foreign currency transferable only to Egypt and in Egyptian currency (e.g., the Sudanese pound). **2** resting on assumption, supposed, presumed.

حاسب *ħaasib*[1] **1** /adj/ calculating, calculatory. *makana ħasba* calculator. *masṭara ħasba* slide rule. **2** /n pl *-aat*/ calculator, calculating machine. ‖*ħaasib ʕiliktirooni* computer.

محسوب *maħsuub* /n pl *maħasiib*/ protégé. *ʕana maħsuub-ak* I'm yours to command. *ʕil-maħsuub mansuub wi-law kaan maʒyuub [prov]* ≈ you are worth as much as your patronage. ‖*maħsuub-ak* ≈ yours truly, as in *da façiir xaaliş zayy' maħsuub-ak* he's a very poor man just like me.

محسوبيّة *maħsubiyya* /n/ **1** favouritism. *ʕif-ʃirka kull-a-ha maħsubiyya* the company works entirely on favouritism. **2** /pl *-aat*/ instance of favouritism. *ʕif-ʃirka kull-a-ha maħsubiyyaat* everything in the company is done through influence.

حسبى *ħasbi* /adj/ of or pertaining to accounting. ‖*ʕil-maglis il-ħasbi* office of the judiciary which supervises the financial affairs of wards of the court.

حسبة *ħisba* /n/ calculation. ‖*ʕil-mablaʁ ħisba basiiṭa* the sum is paltry. -*ħisbit birma* complicated problem.

حسبان *ħisbaan* /n/ surmise, expectation. *da ma-kan-ʃ' f-ħisbaan-i* that's something I hadn't expected at all.

حسب *ħasab*[2] **1** (also *ʕala ħasab*) /prep/ according to. *kull' waaḥid ħasab rutbit-u* each one according to his rank. *tartiib ʕabgadi ħasab il-muʕallifiin* alphabetical order by author. **2** /n/: *ʕil-ħasab win-nasab* social standing.

¶ *ħasab ma, ʕala ħasab ma* /conj/ as, as in *ʕala ħasab ma tḥibb' hiyya* as she herself wants, *ʕala ħasab ma z-zibuun ʕaayiz* as the customer wants.

حسب الله *ħasab alla* /prop n/ male given name. ‖*firçit ħasab alla [deris]* brass band of old men and even older instruments such as is often hired to play at peasant weddings etc. -*mazziikit ħasab alla* the music played by such a band.

حسيب *ħasiib* /adj */ of noble birth. ‖*ʕil-ħasiib in-nasiib* epithet of anyone descended from the Prophet Muhammad.

حسّيب *ħassiib* /n pl *ħassiiba*/ one good at calculating. *di lil-mawʒudiin miʃ lil-ħassiiba [prov]* (good fortune is) for those who have it provided by God, not for those who scheme and plan.

اتحسب *ʔitḥasab* /vi/ **1** to be calculated. *ʕil-ʕagaaza l-ʒarḍa b-titḥisib min il-ʕagaaza s-sanawiyya* compassionate leave is counted a part of one's annual leave. ‖*saaʒa ma-titḥisib-ʃ' mil-ʒumr* (a time that is not reckoned as part of one's life span) a wonderful time. **2** to be considered. -iva *miṭḥisib*.

انحسب *ʔinḥasab* = *ʔitḥasab*. -iva *minḥisib*.

حسّب *ħassib* /vt/ to entrust (s.o.) to the protection (of, e.g., God or a saint). *ħassibt-u bin-nabi* I have entrusted him to the protection of the Prophet Muhammad (said by a mother when putting her child to sleep). -ava/pva *miħassib*.

اتحسّب *ʔitḥassib* /vi/ to be entrusted to the protection (of, e.g., God or a saint). -iva *miṭḥassib*.

حاسب *ħaasib*[2] **1** /vt/ to settle an account with. *ʒaayiz ʕaḥasb-ak ʒala ħaagit il-beet* I want to settle with you for the shopping. *fi-yoom mil-ʕayyaam ḥ-aḥasb-ak ʒala-lli ʒmalt-u* one of these days I'm going to settle up with you for what you did. **2** /vi/ to take care, be careful. *ħaasib* watch it! be careful! *ħaasib ʒalayya* treat me gently! ‖*ħaasib hina ya-sṭa* stop here, driver! -vn *miħasba*; ava *miħaasib*.

محاسبة *muħasba* /n/ accounting, accountancy.

محاسب *muħaasib* /n */ accountant. ‖*muħaasib qanuuni* chartered accountant.

اتحاسب *ʔitḥaasib* /vi/ **1** to settle accounts with one another. *ma-ʃafu-hum-ʃ' w-humma b-yisraçu ʃafuu-hum wi-humma b-yitḥasbu [prov]* (they didn't see them stealing but they saw them dividing up the swag) ≈ wrongdoers may not be caught in the act, but the consequences of their action will always betray them. **2** to have an account settled. -ava/iva *miṭḥaasib*.

ح س د

حسد *ħasad*[1] *(i)* /vt/ **1** to envy. *ʕaḥsid-ak ʒalee* I envy you it. **2** to put the evil eye on. *ma-tbuşş'-lii-ʃ çawi la-tiḥsid-ni* don't look at me so hard or you'll put the evil eye on me. -vn *ħasad, ħasadaan*; ava *ħaasid*; pva *maḥsuud*.

حسد *ħasad*[2] /n/ **1** envy. **2** the evil eye.

حسود *ħasuud* /adj pl *ħussaad*/ **1** envious. *walad xabiis ħasuud bi-yikrah-hum ʒaʃaan ʕaḥsan minnu* a low, envious boy who hates them because they are better than he. *ʒumr il-ħasuud ma ysuud* the envious never gain ascendancy. **2** having the evil eye. *ʒeen il-ħasuud fiiha ʒuud* may the evil-eyed be struck blind! (a formula against the evil eye).

حسودى *ħasuudi* /adj */ **1** envious. **2** having the evil eye.

حسّاد *ħassaad* /n */ one having the evil eye. *ħaşwaaya f-ʒeen il-ħassaada* ≈ may the evil-eyed woman be struck blind! (a formula against the evil eye).

اتحسد *ʔitḥasad* /vi/ **1** to be envied. **2** to be made a victim of the evil eye. -iva *miṭḥisid*.

انحسد *ʔinḥasad* = *ʔitḥasad*. -iva *minḥisid*.

ح س ر

حسر *ħasar (u)* /vt/ to cause grief to (s.o., usually by loss). *ga l-ħaraami ħasar-ni ʕal-ʠirfeen illi kaanu ʕandi* a thief came and broke my heart by taking (all) the money I had. - vn *ħasaraan*; ava *ħaasir*; pva *maħsuur*.

حسرة *ħasra* /n/ deep grief or regret. *ħa-tmuut bi-ħasrit-ha* she will die of grief. ‖*ya ħasra [women]* a mild exclamation of regret ≈ oh dear! alas! - *ya ħasra ʕala ...* woe betide ...!

اتحسر *ʔitħasar* /vi/ **1** passive of *ħasar*. **2** to feel great grief. - ava/iva *mitħisir*.

انحسر *ʔinħasar* = *ʔitħasar*. *ʔin ʃa-lla ma-tinħisrii-ʃ ʕala ħadd[i] min ħabayb-ak [women in trad soc]* may you never suffer the loss of any of your dear ones. - ava/iva *minħisir*.

حسّر *ħassar* /vt/ to make (s.o.) feel sorry or regretful. *ʃaqqit-ha l-ħilwa ħassarit-ni ʕala nafs-i* her nice flat made me feel sorry for myself. - ava/pva *miħassar*.

محسّر *miħassar* /adj */ mean, miserly.

اتحسّر *ʔitħassar* /vi/ to feel sorrowful, feel regretful. *maal baxt-a-ha wi-b-titħassar ʕala nafs-a-ha dilwaqti* her luck turned and now she feels sorry for herself. *baaʕ ʕarabiyyit-u b-ruxṣ it-turaab wi-dilwaqti b-yitħassar ʕaleeha* he sold his car dirt cheap and now he regrets it. - ava *mitħassar*.

ح س س[1]

حسّ *ħass[1] (i)* /vi/ **1** to experience a physical sensation. *ħasseet bi-suquʕiyyit il-filuus* I felt the cold touch of the coins. *b-aħiss[i] b-ʠalb-i bi-yduqq[i] gaamid* I feel my heart pounding. **2** to have an emotional feeling or psychological awareness. *ħaasis bil-wiħda* he's feeling lonely. *leeh dayman b-aħiss inni ʔaqall[i] min in-naas* why do I always feel that I'm beneath other people? ‖*ʠalb-i ħaasis* I have a premonition. - *ħiss[a] ʕala damm-ak* (or *ʕala laḥm-ak*) ≈ you ought to be ashamed of yourself! **3** to become aware. *lamma rigʕu bet-hum ħassu bil-ħaraami* when they arrived back home they sensed the presence of the thief. *raagil ma-bi-yħiss[i]-ʃ* an insensitive man. - vn *ħasasaan*; ava *ħaasis*; pva *maħsuus*.

حاسّة *ħassa* /n pl *ħawaass*/ sense. *ʔil-ħawaass il-xamsa* the five senses. *ʕandu ħaaga zayy il-ħassa s-sadsa* he has almost a sixth sense. ‖*raaħit ħawass-i* I lost all sensation (an expression of shock). - *ʔana b-axdim-ak bi-kull[i] ħawass-i* I serve you with everything I have.

محسوس *maħsuus* /adj/ concrete, tangible. ‖*kalaam maħsuus* double entendre. - *kallimt-u bil-maħsuus* I gave him indirect hints.

حسّ *ħiss* /n/ **1** voice. *ma-tʕallii-ʃ ħiss-ak* don't raise your voice. **2** sound. *ħiss il-mutoor* the noise of the engine. **3** effective presence (of s.o. or s.th.). *ṭuul ma ħiss-ak fid-dinya* as long as you're alive. *ʔana ṭayyib bi-ħiss-ak* I owe all my well-being to you. ‖*ħiss-ak ...* watch out for ..., as in *ħiss-ak il-baab* mind the door! - *ħiss-ak ʕeen-ak* (or *ħiss-ak biss-ak [joc]*) ≈ just you dare! - *la ħiss[i] wala xabar* ≈ neither sight nor sound, as in *feen-ak ya raagil la ħiss[i] wala xabar* where have you been? there's been no sight or sound of you for ages. - *ʕala ħiss ...* on the strength of one's relationship with ..., as in *ʔana b-atʕaamil fis-suuq ʕala ħiss-ak* I carry on my business by virtue of your good name, *ʔitɤana ʕala ħiss il-maħall* he became rich thanks to the shop.

حسّي *ħissi* /adj */ sensuous. *raagil ħissi* a man who lives to indulge the senses.

حسّيّة *ħissiyya* /n/ sensibility, sensitivity, feeling.

حساسيّة *ħasasiyya* /n pl *-aat*/ **1** sensitivity, feeling. **2** *[path]* allergy.

حسيس *ħasiis* /adj */ sensitive (of people).

حسّاس *ħassaas* /adj/ **1** sensitive. *mizaan ħassaas* fine balance. *bi-yitħifir bi-ʔibra ħassaasa* it is etched out with a sensitive needle. **2** *[phot]* sensitized (of plate or paper).

حسّس *ħassis* /vt/ **1** to cause to feel. *ħassisit-ni ʔinnaha miʃ ʕayza tʃuf-ni* she made me feel that she didn't want to see me. **2** to sensitize. *fuɤlit-u ʔinnu yħassis wi-ygaffif iz-zinka f-nafs il-waqt* its job is to sensitize and dry the plate simultaneously. - /vi/ **3** to give a light touch. *maddeet ʔiid-i ʔaħassis ʕala buuz ig-gazma ʔafuuf-u ṭṭabbaq walla lissa* I stretched out my hand to feel the toe of the shoe and see if it had creased yet. **4** to grope, feel one's way. *kaan il-ʠamar ɤaayib wi-ħassisna l-ɤaayit ma wṣilna* there was no moon so we felt our way along till we got there. - vn *taħsiis*; ava/pva *miħassis*.

اتحسّس *ʔitħassis* /vi/ **1** to be made to feel. *ʔitħassist inni miʃ marɤuub fiyya* I was made to feel that I was not wanted. **2** to be sensitized. **3** (impersonal) passive of *ħassis* 3. *ʔig-gibna di mitħassis ʕaleeha* this cheese has been handled. - iva *mitħassis*.

أحسّ *ʔaħass↑* = *ħass*. - vn *ʔiħsaas*.

إحساس *ʔiħsaas* /n/ **1** /pl *-aat*/ feeling, sense. *ʕandu ʔiħsaas bil-luɤa* he has a feeling for language. *fii ʔiħsaas ʕand il-muwaẓẓaf ik-kibiir ʔinn il-ʕarabiyya mukafʔa lii* top officials seem to think that cars are a reward for them personally. **2** /pl *ʔaħasiis*/ sensibility. *ya baxt[i] min iggawwiz waħda tifham ʔiħsaas-u* how lucky is he who is married to a woman who understands his feelings! ‖*ma-ʕanduu-ʃ ʔiħsaas* or *huwwa ʕadiim il-ʔiħsaas* he is insensitive.

ح س س [2]
حث *ħass*[2] *(i)* /vt/ to urge. *ʠamiir-i ħass-i-ni ɛala l-iɛtiraaf* my conscience urged me to confess. - vn *ħass*.
حث *ħass*[3] /interj/ cry urging a dog to attack. *ħass* or *ħass" ɛalee* go get him!

ح س م [1]
حسم *ħasam*↑ *(i)* /vt/ to settle (s.th.) decisively. *kilmiteen minnu yiħsimu l-masʕala* a couple of words from him would settle the question once and for all. *qqraar ħaasim* a decisive resolution. - vn *ħasm*; ava *ħaasim*; pva *maħsuum*.
حسم *ħasm*↑ /n/ resoluteness, resolution. *b-ymaaris masʕuliyyaat-u b-surɛa w-bi-ħasm* he carries out his responsibilities quickly and resolutely.
اتحسم *ʔitħasam* /vi/ to be settled decisively. - iva *mitħisim*.
انحسم *ʔinħasam* = *ʔitħasam*. - ivn *minħisim*.

ح س م [2]
حسوم *ħusuum* /n/ first seven days of the Coptic month of Baramhat, popularly believed to be a bad time for planting.
حسومات *ħusumaat* = *ħusuum*.

ح س ن
حسن *ħusn* /n/ excellence, (good) quality. *ħusn il-xidma* the excellence of the service. ‖ *ħusn is-suuʠ wala ħusn il-biʠaaɛa [prov]* ≈ a good market is more profitable than having good merchandise. - *sitt il-ħusn (wig-gamaal)* (1) fairy-tale princess or heroine. (2) *[bot]* bella-donna. - *ʈaabıɛ ıl-ħusn* dımple ın the chin.
حسن *ħasan*↑ /adj/ good. *ħasan iş-şuura* good-looking. *ħasan is-seer wis-suluuk* of good conduct and behaviour. *nawayaa ħasana* he has good intentions.
حسنة *ħasana* /n pl *-aat*/ **1** good deed, charitable act, alms. *dool mabsuʈiin wi-ħasanit bet-hum kitiir* they're well-off and give a lot to charity. *ħasana ʠaliila timnaɛ balaawi ktiira [beggars]* a little charity wards off many troubles! *ħasana w-ʕana siid-ak [prov]* ≈ people ask you for charity and yet behave as though they were your master. **2** good aspect, pleasant characteristic. *ʕiz-zawaag ħasanaat-u ʕaktar min sayyiʕaat-u* the good aspects of marriage outnumber the bad. **3** mole, beauty spot.
أحسن *ʕaħsan*[1] **1** /el/ better/best. *ma-ntii-ʃ ʕaħsan minni* you are no better than I. *ʕaħsan film' fil-balad* the best film in town. *limm' lsaan-ak ʕaħsan-lak* you'd better curb your tongue! **2** /conj, also *laħsan*/ **2a** because. *haatu l-ʕutumbiil ʕaħsan il-beeh misaafir* get the car, because the bey is going on a journey. **2b** lest. *ʕiskut ʕaħsan yismaɛ-ak* be quiet or he'll hear you. **3** /adv/ perhaps, maybe (usually indicating worry or fear). *ʕaħsan tikuun fiʈsit taħt il-ɛarabiyya* she may possibly have been run over by the car! **4** /interj/ ≈ serves you (him, her etc.) right!
¶ *ʕaħsan ma* /conj/ rather than. *ʕasib-hum xaaliʂ ʕaħsan m-aɛiif benhum bi-mazalla* I would rather leave them altogether than live among them in humiliation.
حسونيّة *ħusuniyya* /n/ (good) quality.
الحسين *ʔil-ħuseen* **1** el-Husayn, grandson of the Prophet Muhammad. *gaamiɛ* (or *maʃhad) il-ħuseen* the Mosque of el-Husayn in Cairo, between el-Azhar and Khan el-Khalili. **2** *ʔil-ħuśeen* or *ħayy ıl-ħuseen* district immediately surrounding the mosque of el-Husayn.
حسيني *ħuseeni* /m/ *[mus]* **1** mode in Arabic music beginning on D and having C half flat and E half flat. *ħuseeni ɛafiraan* mode in Arabic music beginning on A and having B half flat and E half flat. **2** second pair of strings on a *ɛuud* (the A strings).
الحسينيّة *ʔil-ħiseniyya* /prop n/ the district immediately surrounding the mosque of el-Husayn in Cairo.
حسّن *ħassin* /vt/ to improve, ameliorate. *ʔil-maṣnaɛ da ħassin ʕintaag-u ʠawi* this factory has greatly improved its production. - vn *taħsiin*; ava/pva *miħassin*.
تحسينات *taħsinaat* /pl n/ improvements. *ʔil-maħall' maʠfuul lit-taħsinaat* the shop is closed for improvements.
اتحسّن *ʔitħassin* /vi/ **1** to improve. *ʔig-gaww' ma-yitħassin-ʃ' ktiir ʠabl' fabraayir* the weather doesn't improve much before February. **2** to be improved. - vn *taħassun*; ava/iva *mitħassin*.
تحسّن *taħassun* /n pl *-aat*/ improvement.
أحسن *ʕaħsan*[2] /vi/ to do well. *ʕaħsant* well done! *ʔittiʠi ʃarra man ʕaħsanta ʔilee [prov]* beware the evil of those to whom you do good! - vn *ʔiħsaan*; ava *miħsin, muħsin*.
¶ *ʕaħsan ɛala* to give alms to.
إحسان *ʔiħsaan* /n/ **1** charity. **2** *[Isl]* highest degree of faith and works that can be achieved by a Sufi.
محسن *muħsin* /n */ charitable person. *beet il-muħsin ɛamaar [prov]* the charitable man's house prospers. ‖ ... *wi-kaan allaah yiħibb il-muħsiniin* ≈ ... and that was the end of that, ... and nothing could be done about it (a rueful comment at the end of a tale of mishaps and misfortunes).
استحسن *ʔistaħsin* /vt/ to select as better or best. *ħ-astaħsin-lak ʕayy' ʠaʈr' ywafʠ-ak* I'll pick out for you the train that suits you best. - vn *ʔistiħsaan*; ava

mistaḥsin; pva *mustaḥsan*↑.

يستحسن *yustaḥsan* /imperf preverb/ it would be preferable to, it would be better to. *yustaḥsan tiṣḥa badri* it'd be better if you got up early. *yustaḥsan ma-tgii-ʃ hina taani* you'd better not come here again. *min il-mustaḥsan* it is preferable, as in *min il-mustaḥsan (ʕinn) il-ḥagga tilbis ʕabyaḍ* it is preferable for a woman pilgrim to wear white. - vn *ʕistiḥsaan*; ava *mistaḥsin*; pva *mustaḥsan*↑.

ح س و ك

حسوك *ḥaswik* /vi/ to be pernickety, fuss. - vn *ḥaswaka*; ava *miḥaswik*.

ح ش ر [1]

حشر *ḥaʃar (u, i)* /vt/ to force, stuff. *ḥaʃar ʕiid-u fil-xurmⁱ ma-ɛrif-ʃⁱ yṭallaɛ-ha* he stuffed his hand into the hole and couldn't pull it out. *daxal ḥaʃr* it fitted in only with difficulty. ‖*bi-yuḥʃur (fil-ʕakl)* he stuffs himself (with food). - *ʕeeʃ ḥaʃar-ak maɛaana* what gives you the right to interfere with us? - vn *ḥaʃr*; ava *ḥaaʃir*; pva *maḥʃuur*.

¶ *ḥaʃar nafs-u* to interfere. *bi-yuḥʃur nafs-u f-kullᵃ ḥaaga* he interferes in everything.

حشرى *ḥiʃari* /adj */ interfering, nosey. *ma-tibqaa-ʃ ḥiʃari w-tiddaxxal fi-lli ma-lik-ʃⁱ fii* don't be nosey and interfere in what's none of your business.

اتحشر *ʕitḥaʃar* /vi/ **1** to interfere. *ʕitḥaʃar fil-xinaaqa* he interfered in the fight. *ḥaddⁱ yitḥiʃir-li* will someone stand up for me? **2** to be wedged, be stuck, be forced (into s.th.). *ʕil-muftaaḥ itḥaʃar fil-qifl* the key got stuck in the lock. - ava/iva *mitḥiʃir*.

انحشر *ʕinḥaʃar* = *ʕitḥaʃar*. - ava/iva *minḥiʃir*.

حشّر *ḥaʃʃar* /vt/ to pack, stuff with. *ḥaʃʃaru z-zakaayib (bi)-quṭn* they stuffed the sacks with cotton. - vn *taḥʃiir*; ava/pva *miḥaʃʃar*.

اتحشّر *ʕitḥaʃʃar* /vi/ to be packed, be stuffed. - iva *mitḥaʃʃar*.

أحشر *ʕaḥʃar*↓ /vt/ *[women]* to cause to interfere. *ʕeeh illi ʕaḥʃar-ak benhum* whatever made you interfere with them?

ح ش ر [2]

حشرة *ḥaʃara* /n pl *-aat*/ **1** insect. **2** insignificant person, nonentity.

حشرى *ḥaʃari* /adj/ insectile, insecti-. *mubidaat ḥaʃariyya* insecticides.

ح ش ر ج

حسرج *ḥaʃrag* /vi/ **1** to become hoarse (of the voice). *ʕil-bardⁱ xalla ṣoot-u ḥaʃrag* his cold made his voice hoarse. **2** to gasp for breath (of one suffocating). ‖*ḥaʃragit il-moot* the death rattle. - vn *ḥaʃraga*; ava *miḥaʃrag*.

اتحسرج *ʕitḥaʃrag* = *ḥaʃrag*. - ava *mitḥaʃrag*.

ح ش ش

حشّ *ḥaʃʃ (i)* **1** /vt/ to cut or mow (grass, clover etc.). *ʕilli yfiiq mil-bahaayim niḥiʃʃ-u driis* what's left after the animals have grazed we cut to make into dried fodder. *ʕin kuntⁱ f-balad yiɛbidu g-gaḥʃⁱ ḥiʃʃⁱ wi-ddii-lu [prov]* (when in a country where they worship the ass, cut some grass and feed him) ≈ when in Rome do as the Romans do. ‖*ḥaʃʃ wiṣṭ-u bin-nabbuut* he felled him with his club. - *ʕil-beeɛa di ḥaʃʃit wiṣṭ-i* (or *ḍahr-i*) this deal left me flat broke. **2** /vi/ to eat large quantities. *qaɛad yiḥiʃʃⁱ l-ɣaayit ma xallaṣ il-ʕakl kull-u* he kept on guzzling until he finished all the food. - vn *ḥaʃʃ*; ava *ḥaaʃif*; pva *maḥʃuuf*.

حشيش *ḥaʃiiʃ* /coll n/ **1** /pl *ḥaʃaayiʃ*/ grass(es). **2** /no pl/ hashish. ‖*baxxᵃ ḥaʃiiʃ* devilish kids.

حشيشة *ḥaʃiiʃa* /n/ **1** = *ḥaʃiiʃ*. — /unit n, pl *-aat*/ **2** a blade of grass. **3a** a piece of hashish. **3b** a variety of hashish.

حشّاش *ḥaʃʃaaʃ* /n */ **1** habitual hashish-smoker. **2** *[joc]* one who is ingenious, artful and humorous in the way of hashish-smokers. ‖*kalaam ḥaʃʃaʃiin* weird ideas.

حشّاشى *ḥaʃʃaaʃi* /adj invar/ **1** of or pertaining to hashish smokers. **2** extraordinarily ingenious and imaginative. *nukat ḥaʃʃaaʃi* amazing jokes.

محشّة *miḥaʃʃa, maḥaʃʃa* /n pl *-aat*/ medium-sized sickle (for cutting grass, clover etc.).

اتحشّ *ʕitḥaʃʃ* /vi/ to be cut (of grass etc.). - iva *mitḥaʃʃ*.

انحشّ *ʕinḥaʃʃ* = *ʕitḥaʃʃ*. - iva *minḥaʃʃ*.

حشّش *ḥaʃʃiʃ* /vi/ **1** to take hashish. **2** to graze on grass. *xud il-ɣanam tiḥaʃʃiʃ ɛag-gisr* take the sheep to graze along the bank. - vn *taḥʃiiʃ*; ava *miḥaʃʃiʃ*.

ح ش ف

حسف *ḥaʃaf* /coll n/ encrustation of seaweed etc. on ships' bottoms, fouling.

محشّف *miḥaʃʃif* /adj/ seaweed-encrusted, fouled.

ح ش م

حشم *ḥaʃam' (i)* /vt/ to keep (s.o.) on a short leash, keep (s.o.) under control. *ʕiḥʃim banaat-ak* make your daughters behave respectably! - vn *ḥaʃamaan*; ava *ḥaaʃim*.

حشمة *ḥiʃma* /n/ decency, modesty. *ya banaat sib-ku mil-ḥiʃma - bukra tʃiibu* don't be so modest, girls -

tomorrow you'll be old and grey! *ʕil-faqr' ḥiʃma wil-ɛizz' bahdala [prov]* poverty (induces) reserve; wealth, flamboyance. - /adjectivally/ *raagil ḥiʃma* a decent man. *sitt' ḥiʃma* a modest woman.

حشم *ḥaʃam*[2] /coll n/ entourage. *xadam wi-ḥaʃam* servants and followers-on.

محاشم *maḥaaʃim*↓ /pl n/ genitals.

اتحشّم *ʔitḥaʃʃim* /vi/ to behave modestly. - ava *mitḥaʃʃim*.

ح ش و see [1] ح ش ى : *ḥaʃw, ḥaʃwa*

[1] ح ش ى

حشى *ḥaʃa*[1] *(i)* /vt/ **1** to stuff. *ḥaʃa l-martaba b-quṭn* he stuffed the mattress with cotton. ‖*kurumb' ya-lli tiḥʃi [vendor's cry]* cabbage, you who (want to) make *maḥʃi*! - *maa-lak maḥʃi hduum* (or *ḥaaʃi nafs-ak hiduum) kida leeh* why ever are you bundled up in so many clothes? **2** to fill (a tooth). **3** to load (a rifle). - vn *ḥaʃw*; ava *ḥaaʃi*; pva *maḥʃi*.

حشو *ḥaʃw* /n/ **1** stuffing, padding. *jakitta ʃitwi b-ḥaʃw* a padded winter jacket. ‖*ɣurzit il-ḥaʃw [needlew]* satin-stitch. - *da fustaan ḥilw' ɋawi.* - *ʔir-rakk[a] ɛal-ḥaʃw* 'That's a very pretty dress.' 'It's the person inside that makes the clothes!' **2** filling (for teeth). **3** panelling. *ḥaʃw' ḥubaybi* chipboard panelling. ‖*ḥaʃw' baladi* style of intricate panel work employing interlocking geometric designs traditionally fitted without nails or glue, used for doors, mosque pulpits etc. (see Pl.G, 9).

حشوة *ḥaʃwa* /unit n, pl *-aat*/ **1** a filling (for a tooth). **2** a piece of panelling.

محشى *maḥʃi* /coll n/ stuffed vegetables. *maḥʃi kuruṃb* stuffed cabbage (leaves).

محشّاية *maḥʃiyyaaya* /unit n, pl *-aat*/ a stuffed vegetable or vegetable leaf.

حشا *ḥaʃa*[2], *ḥiʃa* /n, in constr *ḥaʃaa-* or *ḥaʃaat-*/ **1** guts, belly. *yinḍirib fi-ḥaʃaat-u [women]* may he be struck in his guts! **2** offspring. ‖*ya ḥaʃaa-ya [women]* O my poor child!

أحشاء *ʔaḥʃaaʔ* /pl n/ internal organs of the body.

اتحشى *ʔitḥaʃa* /vi/ **1** to be stuffed. **2** to be filled (of a tooth). **3** to be loaded (of a rifle). - iva *mitḥiʃi*.

انحشى *ʔinḥaʃa* = *ʔitḥaʃa*. - iva *minḥiʃi*.

حشّى *ḥaʃʃa* /vt/ to stuff repeatedly or forcefully. *ɋaɛad yiḥaʃʃi fig-garḥ' lamma d-damm' wiɋif* he went on packing the wound till the blood stopped. - vn *taḥʃiyya*; ava/pva *miḥaʃʃi*.

[2] ح ش ى

حاشية *ḥaʃya* /n pl *ḥawaaʃi*/ marginal note, annotation.

حاشا *ḥaaʃa: ḥaaʃa li-llaah* God forbid!

اتحاشى *ʔitḥaaʃa* /vt/ to avoid, shun. *kull-u-hum fil-maṣlaḥa b-yitḥaʃuu-ni* everybody in the agency is avoiding me. - ava/pva *mitḥaaʃi*.

ح ص ا see [1] ح ص و : *ḥaṣa*

ح ص ا و

حصاوى *ḥaṣaawi* /adj/: *ḥumaar ḥaṣaawi* hinny. ‖*muxx-u ḥaṣaawi* he's stupid and rash.

ح ص ب

حصبة *ḥaṣba* /n/ measles. *ḥaṣba ʔalmaani* German measles.

حصّب *ḥaṣṣab* /vi/ to come down with measles. *law ibn-ak ḥaṣṣab labbis-u ʔaḥmar* if your son gets measles dress him in red. - vn *taḥṣiib*; ava *miḥaṣṣab*.

اتحصّب *ʔitḥaṣṣab* = *ḥaṣṣab*. - ava *mitḥaṣṣab*.

ح ص د

حصد *ḥaṣad (u)* /vt/ to harvest (wheat, barley, rice and mature clover). *ʔilli tizraɛ bi-ʔiid-ak tuḥṣud bi-ʔiid-ak [prov]* ≈ as you sow, so shall you reap. - vn *ḥaṣd, ḥaṣaad*; ava *ḥaaṣid*; pva *maḥṣuud*.

حصيدة *ḥaṣiida* /n/ *[agric]* **1** cropped land before the stubble has been ploughed in. **2** harvest time (especially for wheat).

حصّادة *ḥaṣṣaada* /n pl *-aat*/ (mechanical) harvester.

اتحصد *ʔitḥaṣad* /vi/ to be harvested. - iva *mitḥiṣid*.

انحصد *ʔinḥaṣad* = *ʔitḥaṣad*. - iva *minḥiṣid*.

ح ص ر

حصر *ḥaṣar (u)* /vt/ **1** to narrow down, restrict, limit. *ʔil-muxbir ḥaṣar if-ʃubha fil-xaddaama* the detective narrowed suspicion down to the maid. *ʔiḥna ɛayziin nuḥṣur il-xinaaɋa* we want to keep the quarrel within bounds. **2** to determine the extent or quantity of. *ʔil-ḥukuuma ɛayza tuḥṣur ɛadad il-ʔummiyyiin* the government wants to determine the number of illiterates. *ma-l(uu)-ʃ ḥaṣr* beyond counting, innumerable. ‖*ḥaṣr it-tirka [leg]* taking inventory of a legacy for legal purposes. **3** to take short. *ʔil-mayya ḥaṣarit-u* he badly needed to relieve himself. *fakk[a] ḥaṣr*↓ to urinate, have a pee. - vn *ḥaṣr*; ava *ḥaaṣir*; pva *maḥṣuur*.

حصرى *ḥuṣari* /n pl *-yya*/ reed mat maker.

حصار *ḥuṣaar* /n/ *[mus]* (the note) A flat.

حصير *ḥaṣiir* /coll n/ woven reed matting.

حصيرة *ḥaṣiira* /n/ **1** /pl *ḥuṣr, ḥaṣaayir*/ reed mat. ‖*ɛala l-ḥaṣiira* penniless, flat broke. - *ḥaṣiirit gibna* rush sieve for straining curds. - *ḥaṣiirit iṣ-ṣeef wasɛa [prov]* (summer's mat is broad) there's always room for guests in

the summer (because one can put a mat down anywhere and sleep on it). - *kureek ḥaṣiira* hydraulic car-lift. **2** /pl *ḥaṣiir/ [naut]* bottom part of the hull of a sailing boat.

اتحصر *ʕitḥaṣar* /vi/ passive of *ḥaṣar*. - iva *mitḥiṣir*.

انحصر *ʕinḥaṣar* = *ʕitḥaṣar*. - iva *minḥiṣir*.

حاصر *ḥaaṣir* /vt/ to surround, contain, besiege. *ʕil-buliiṣ ḥaaṣir il-muharribiin* the police surrounded the smugglers. *firʔit il-maṭaafi ḥaṣrit in-naar* the firemen contained the fire. - vn *ḥiṣaar, muḥaṣra*; ava/pva *miḥaaṣir*; pva *muḥaaṣar*↑.

حصار *ḥiṣaar* /n pl *-aat*/ siege.

اتحاصر *ʕitḥaaṣir* /vi/ to be surrounded, be contained, be besieged. - iva *mitḥaaṣir*.

ح ص ر م

حصرم *ḥaṣram* **1** /vt/ to prevent the ripening of (grapes or dates). *ʕig-gaww*ª *ḥaṣram il-ɛinab* the weather spoiled the grapes. **2** /vi/ to become sour or otherwise unpleasant in taste. - ava *miḥaṣram*.

حصرم *ḥuṣrum* /coll n/ unripe grapes or dates.

ح ص ص

حصّة *ḥiṣṣa* /n pl *ḥiṣaṣ*/ **1** class period. *ɛandina n-nahar-da ḥiṣṣit riyaaḍa* we have a mathematics class today. **2** share, allotment. *ḥiṣṣit il-muwaẓẓaf fit-taʕminaat l-igtimaɛiyya* the employee's social insurance contribution. *ḥiṣṣit-ak kaam fir-ruzz* how much is your share of the rice?

[1] ح ص ل

حصل *ḥaṣal (a)* /vi/ to happen, take place, occur. *ʕeeh illi b-yiḥṣal hina* what's going on here? *ḥaṣalit ḥariiqa fil-ɛimaara* a fire occurred in the building. *ʕil-ḥadsa lli ḥaṣalit laha* the accident that happened to her. *ma-ḥaṣal-ʃ*[i] *liyya ʃ-ʃaraf* I haven't had the honour. *ḥaṣal ɛandi sahw* I forgot. *ḥaṣal minnu ɣalaṭ* he made a mistake. *ḥaṣal fii kasr* it got broken. ‖*ḥaṣal xeer* it turned out O.K., nothing serious happened. - *ḥuṣuul il-bala wala ntiẓaar-u [prov]* it's better to suffer a calamity than to live in expectation of it. - *ma-yiḥṣal-ʃ* (1) (also *ʕin ʃa-lla ma-yiḥṣal*) may it not happen! God forbid! (2) it'll never happen (as you say), your threats are empty. - vn *ḥuṣuul*; ava *ḥaaṣil*.

¶ *ḥaṣal ɛala*↑ to obtain, get. *ḥaṣalt*ª *ɛad-dukturaah* I obtained a doctorate.

حاصل *ḥaaṣil* /n/ **1** state of affairs. *da l-ḥaaṣil* that's the way things stand. **2** *[rur]* storehouse for grain. **3** *[math]* result. *ḥaaṣil iḍ-ḍarb* product.

محصول *maḥṣuul* /n pl *maḥaṣiil*/ crop, yield. *maḥaṣiil ṣefiyya* summer crops. *ʕir-rayy il-maẓbuuṭ bi-yzawwid maḥṣuul il-ʕarḍ* proper irrigation increases the yield of the land.

حصالة *ḥuṣaala* /coll n/ *[rur]* grains and heavy straw left after winnowing.

حصيلة *ḥaṣiila* /n/ amount collected, takings. *ḥaṣiilit bank id-damm*[i] *kaam litr in-nahar-da* how many litres did the blood bank collect today?

حصّالة *ḥaṣṣaala* /n pl *-aat*/ money-box.

حصّل *ḥaṣṣal* /vt/ **1a** to catch up with. *maddeet li-ɣaayit ma ḥaṣṣalt-u-hum* I hurried till I caught up with them. *kaanit ḥa-tintiḥir zayy*[i] *ma-ttafaqna w-kunt*ª *ḥ-aḥaṣṣal-ha* she would have killed herself as we had agreed and I was going to follow her. **1b** to manage to get, obtain with effort. *ruḥt ig-gamɛiyya w-ḥaṣṣalt(-i-li) farxa* I went to the co-operative and managed to get a chicken. ‖*taḥṣiil ḥaaṣil* (1) without due care, in a slapdash way, as in *ɛamal ʔif-fuvl*[i] *taḥṣiil ḥaaṣil* he did the work sloppily. (2) something (so obvious as to be) hardly worth stating, as in *yibqa taḥṣiil ḥaaṣil lamma nquul ʕinnu laazim kaan fii ʕazma been is-sawra wil-ʕixwaan* needless to say, there had to be a crisis between the Revolution and the Muslim Brothers. **2a** to reach. *ḥa-nḥaṣṣal ʕiskindiriyya qabl iḍ-ḍalma* we'll reach Alexandria before it's dark. *ma-ḥaṣṣal-ʃ*[i] *la marḥala talta wala rabɛa* he didn't get to the third or fourth stage. *ʕil-manga ḥaṣṣalit sittiin ʔirʃ ik-kiilu* mangoes have reached sixty piastres a kilo. ‖*hiyya ḥaṣṣalit baqa* has it come to this then? have things come to such a pass? - *kull-u mḥaṣṣal baɛḍ-u* it all comes to the same thing. - *la mḥaṣṣal wala mwaṣṣal* good-for-nothing. **2b**↑ to grasp, comprehend. *ʕiṭ-ṭalaba ma-ḥaṣṣaluu-ʃ id-dars* the students didn't grasp the lesson. **3a** to collect (dues). *ṣaaḥib il-beet bi-yḥaṣṣal il-ʕigaar yoom il-xamiis* the landlord collects the rent on Thursday. **3b** to yield (in dues). *ʕil-ɛimaara bi-tḥaṣṣal tultumiit gineeh fiʃ-ʃahr* the building brings in a revenue of three hundred pounds a month. - vn *taḥṣiil*; ava/pva *miḥaṣṣal*.

محصّل *muḥaṣṣil* /n */ collector of dues (e.g., fares, debts, taxes).

محصّلة *muḥaṣṣila* /n pl *-aat*/ *[math]* resultant.

اتحصّل *ʕitḥaṣṣal* /vi/ **1** to be collected (of dues). **2** to be comprehended, be grasped. - iva *mitḥaṣṣal*.

¶ *ʕitḥaṣṣal ɛala* to obtain (with effort). *ʕitḥaṣṣalt*ª *ɛala talaata gneeh wi-xaatim dahab* I managed to get hold of three pounds and a gold ring.

متحصّل *mitḥaṣṣal*↓ /n/ income. *magmuuɛ il-mitḥaṣṣal maɛaaya ʃahri ʕitnaaʃar gineeh* my total monthly income is twelve pounds.

استحصل *ʕistaḥṣal*↓ /vi/ to gain possession (of s.th.) by exertion. *yiʃtaval yoom bi-ḥaal-u ɛalaʃaan yistaḥṣal-lu*

ɛala ɛifriin qirf he works the whole day long to get twenty piastres. - ava *mistaḥṣal*.

² ح ص ل
حوصلة *ḥuṣála, ḥuṣla* /n pl *-aat, ḥawaaṣil*/ craw, crop of a bird. ‖*ḥuṣalt-u dayyiqa* he's hot-tempered.

- ح ص ل ب
حصلبان *ḥaṣalbaan* /n/ rosemary.

¹ ح ص ن
حصن *ḥiṣn* /n pl *ḥuṣuun*/ fortress.
حصانة *ḥaṣaana* /n pl *-aat*/ immunity. *ʔil-ḥuqna di b-tiɛmil ḥaṣaana min id-diftirya* this injection gives immunity from diphtheria. *ʔil-ḥaṣaana d-diblumasiyya* diplomatic immunity.
حصين *ḥaṣiin* /adj/ impregnable. *ḥigaab il-ḥiṣn il-ḥaṣiin [magic]* the amulet of unfailing protection.
حصّن *ḥaṣṣan* /vt/ **1** to fortify, protect. **2** to immunize (against disease). **3** to cast a spell as protection against the evil eye. *miḥaṣṣan min if-feen↓ [women]* may you be protected from harm. - vn *taḥṣiin*; ava/pva *miḥaṣṣan*.
تحصين *taḥṣiin* /n pl *-aat*/ charm or spell to protect one from evil.
اتحصّن *ʔitḥaṣṣan* /vi/ passive of *ḥaṣṣan*. - iva *mitḥaṣṣan*.

² ح ص ن
حصان *ḥuṣaan* /n pl *ḥiṣína*/ **1** stallion, (loosely) a horse of either sex. *qiwwit ḥuṣaan* horsepower. *ḥuṣaan il-qafz [athl]* vaulting horse. **2** knight (chess piece).

¹ ح ص و
حصو *ḥaṣw* /coll n/ pebble(s), fragment(s) of stone, pottery etc.
حصى *ḥaṣa = ḥaṣw*. ‖*ḥaṣa lbaan [bot]* rosemary.
حصوة *ḥaṣwa* /unit n, pl *ḥaṣaawi*/ a pebble, a fragment of stone. *ḥaṣwa fik-kila* a stone in the kidney. ‖*ḥaṣwit malḥ' f-ɛeen illi ma-yṣalli ɛan-nabi* a grain of salt in the eye of whoever refuses to bless the Prophet (a formula of protection against the evil eye). - *waaɛi zayy il-ḥaṣwa* very thrifty.
حصواية *ḥaṣwaaya = ḥaṣwa*.

² ح ص و see ح ص ا و : *ḥaṣaawi*

¹ ح ص ى
أحصى *ʔaḥṣa↑* /vt/ to count, enumerate. - vn *ʔiḥṣa*.
إحصاء *ʔiḥṣa* /n/ statistics.
إحصائيّة *ʔiḥṣaʔiyya* /n pl *-aat*/ statistic.

² ح ص ى see ¹ ح ص و : *ḥaṣa*

¹ ح ض ر
حضر *ḥaḍar (a)* /vt/ **1** to attend, be present at. *ḥaḍart il-muḥaḍra* I attended the lecture. *ma-ḥaḍart'-ʃ il-film* I didn't go to the film. *fil-waqt il-ḥaadir* at the present time. ‖*badiht-u ḥaḍra* he is quick-witted. **2** to be a contemporary of, be around at the same time as. *ḥaḍart-u fig-geef* I was in the army when he was. – /vi/ **3**↑ *[Isl]* to become due (of prayer). *ʔiṣ-ṣala ḥaḍarit* it is time to pray. *dayman ṣalaat-u ḥaḍra* or *dayman bi-yṣalli ḥaadir* he is always prompt in his prayers. - vn *ḥuḍuur*; ava *ḥaadir*.
حضور *ḥuḍuur* /n/ presence. ‖*ḥuḍuur wi-nṣiraaf* clocking in and out.
حاضر *ḥaadir'* /interj/ at your service! O.K.! (indicating willingness to comply with an order or request).
حضرة *ḥaḍra* /n/ **1** /usu in constr, pl *ḥaḍaraat*/ formal or respectful form of address to, and title of, a man or woman. *ḥaḍrit-ak mineen* where are you from, Sir? *ḥaḍrit id-duktuura* the (respected) lady doctor. ‖*ʔiṣ-ṣala ɛala ḥaḍrit in-nabi* blessings be upon the Prophet! - *ya ḥaḍrit* (1) sarcastic form of address. (2) form of address used to attract the attention of one whose name is unknown to the speaker. **2** /pl *-aat, ḥuḍar*/ **2a** Sufi ceremony, dhikr. **2b** tomb of any venerated Muslim religious figure.
حضارة *ḥaḍaara↑* /n pl *-aat*/ civilization.
محضر *maḥḍar* /n pl *maḥaaḍir*/ **1** formal record or memorandum of a case reported to the police. *maḥḍar ʃakwa ḍidd ig-giraan* report of a complaint against the neighbours. ‖*ḥa-tiftaḥ-li maḥḍar* ≈ are you going to conduct an inquest? (why) are you going to start asking all these penetrating questions? **2** official record of proceedings, minutes. *maḥḍar ig-galsa* the minutes of the session. *maḥḍar il-gard* inventory, list. **3** gathering, session. *maḥḍar xeer* (1) informal meeting to settle a quarrel. (2) mediator in a quarrel. **4** presence. *maḥḍar-u laṭiif* he is pleasant company. **5** /prop n/ a spirit invoked in the *zaar*.
محضر *muḥḍar* /n */ *[leg]* writ server.
حضّر *ḥaḍḍar* /vt/ **1** to prepare, get ready. *ḥaḍḍar ʃanṭit-u* he packed his bag. ‖*ḥaḍḍar muxx-(u)* to concentrate, keep one's wits about one, as in *laazim tiḥaḍḍar muxx-ak ɛalaʃaan tifham id-dars' kwayyis* you have to concentrate to understand the lesson well. - *ḥaḍḍar id-damm* to stimulate the blood, give energy, as in *ʃakl ik-kibda bi-yḥaḍḍar id-damm* eating liver increases vitality. - *ḥaḍḍar-lak il-xeer [women]* may He (God) bring you good fortune! (a courteous response to *ḥaadir*

q.v.). **2** to call up (spirits). **3** to mark as present. *ʕibqa ħaḍḍar-ni fik-kaff* put me down as present on the list. - vn *taħḍiir*; ava *miħaḍḍar*.

تحضير *taħḍiir* /n pl *-aat*/ preparation.

تحضيرى *taħḍiiri* /adj/ *[acad, obsol]* preparatory, elementary.

محضّر *muħaḍḍir* /n */ laboratory assistant.

اتحضّر *ʔitħaḍḍar* /vi/ passive of *ħaḍḍar*. - iva *mitħaḍḍar*.

حاضر *ħaadir*[2↑] **1** /vt/ to lecture to. **2** /vi/ to lecture, present a lecture. - ava *muħaḍra*; ava *miħaadir*.

محاضرة *muħaḍra* /n pl *-aat*/ lecture.

محاضر *muħaadir* /n */ lecturer.

استحضر *ʔistaħḍar* = *ħaḍḍar*. - vn *ʔistiħḍaar*; ava/pva *mustaħḍar*.

مستحضرات *mustaħḍaraat* /pl n/ preparations, products. *mustaħḍaraat tagmiil* beauty preparations.

استحضّر *ʔistaħaḍḍar*↓ /vi/ to prepare oneself. - ava *mistaħaḍḍar*.

ح ض ر[2] see ح ظ ر

ح ض ن

حضن *ħaḍan (u)* /vt/ **1** to embrace. *raaħit maḥḍuuna fiyya* she rushed into my arms. **2** to stick close to. *lamma tirkin il-ʕarabiyya laazim tuḥḍun ir-raṣiif* when you park the car you should hug the kerb. - vn *ħaḍn*; ava *ħaaḍin*; pva *maḥḍuun*.

حضن *ḥuḍn* /n pl *ʔaḥḍaan*/ **1** bosom (in contexts of embracing). *xadu baʕḍ[i] bil-ḥuḍn* they hugged each other. *raaħit waxdaa f-ḥuḍn-a-ha* she took him in her arms. ‖ *ʔitrabba f-ḥuḍn[i] ʔahl-u* he was raised in the bosom of his family. **2** armful, armload. *xud-lak ḥuḍn[i] barsiim ʕalaʃaan ḥumart-ak* take an armful of clover for your donkey.

حضانة *ħaḍaana* /n/ **1** (also *daar ħaḍaana*) nursery school. *duur ħaḍaana* nursery schools. **2** custody (of children).

حضّانة *ħaḍḍaana* /n pl *-aat*/ incubator (for chicks).

اتحضن *ʔitħaḍan* /vi/ to be embraced. - iva *mitħiḍin*.

انحضن *ʔinħaḍan* = *ʔitħaḍan*. - iva *minħiḍin*.

حضّن *ħaḍḍan* **1** /vt/ to bring close. *ħaḍḍan ik-kutub fi-baʕḍ[a] ʕaʃaan tiddi makaan* move the books together to make more room. — /vi/ **2** to pull over. *fardit kawitf[i] ʕarabit wi-ma-lḥiʔt[i]-ʃ ʔaħaḍḍan yimiin* a tyre blew and I didn't have time to pull over to the right. **3** to clinch (in boxing). - vn *taħḍiin*; ava/pva *miħaḍḍan*.

اتحضّن *ʔitħaḍḍan* /vi/ to be brought close together. - iva *mitħaḍḍan*.

ح ض ى

محظيّة *maḥḍiyya*↓ /n pl *-aat, maḥaaḍi*/ favourite woman.

استحظى *ʔistaḥḍa* /vt/ to treat (a woman) as a favourite (of a man). - ava/pva *mistaḥḍi*.

ح ط ب

حطب *ḥaṭab* /coll n/ dry stalks of harvested crops, and other vegetable refuse, used for fodder and kindling.

حطّاب *ḥaṭṭaab* /n */ *[obsol]* collector and seller of firewood.

حطّب *ḥaṭṭab* /vi/ to practise quarter-staff fencing. - vn *taḥṭiib*; ava *miħaṭṭab*.

تحطيب *taḥṭiib* /n/ quarterstaff fencing.

ح ط ط

حطّ *ḥaṭṭ (u)* /vt/ **1a** to put, place, set. *ḥuṭṭ[i] ʃelt-ak* set down your load. *ḥuṭṭ[i] nafs-ak maṭraḥ-i* put yourself in my place: *ḥaṭṭeet ʕala wiff iṣ-ṣiniyya kiilu laḥma* I put a kilo of meat in the pan. *ḥaṭṭuu fis-sign* they put him in prison. ‖ *ḥaṭṭ[i] rigl-(u) fi-* to set foot in, as in *min ʔawwil ma ḥaṭṭeet rigl-i fil-balad* since I first set foot in the town. - *ḥaṭṭ[i] ʔiid-(u) fi-* to put (one's) hand to, get to work on, as in *miʃ ḥ-alaaqi waqt aḥuṭṭ[i] ʔiid-i fii ʔin-nahar-da* I shan't find time to get round to it today. - *ḥaṭṭ[i] ʔiid-(u) ʕala* (1) to get (one's) hands on, acquire, as in *ʔaah law ʕirift aḥuṭṭ[i] ʔiid-i ʕala qirfeen* ah, if only I knew how to get my hands on some money! (2) to put (one's) finger on, determine, as in *ʔana ḥaasis bi-diiq bass[i] miʃ qaadir ʔaḥuṭṭ[i] ʔiid-i ʕas-sabab* I feel depressed but I can't put my finger on the cause. - *ḥaṭṭ[i] ʕeen-(u) ʕala* to set (one's) sights on, set one's heart on, as in *hiyya ḥaṭṭa ʕen-ha ʕalee min yoom ma ʃafit-u* she's been out to get him since the day she saw him. - *ḥaṭṭ-a-ha waaṭi* (to bow one's head) to be meek, be humble. - *ḥaṭṭ-(u) fil-ʔiʕtibaar* to take (s.th.) into consideration. - *ḥaṭṭ-(u-hum) quddaam baʕḍ* to set (people) in confrontation with one another, as in *ʔinta dayman bi-tḥuṭṭ-i-na quddaam baʕḍ[i] kida leeh* why are you always forcing us into confrontation like that? **1b** to apply, administer. *tiḥuṭṭ[i] fazliin liʃ-faʕr* do you want any brilliantine on your hair? *ḥaṭṭit-lu dawa ʕag-garḥ* she put a medication on the wound for him. **2a** to pay. *ḥaṭṭeet fiiha miit gineeh* I paid a hundred pounds for it. **2b** to bet, place (money). *ḥuṭṭ[i] xamsa gneeh ʕala nimra sabʕa* put five pounds on number seven! - /vi/ **3** to alight. *ʔin-naḥla ḥaṭṭit ʕal-warda* the bee alighted on the flower. ‖ *ʔinʃa-lla ygii-lak wi-yḥuṭṭ[a] ʕaleek* may disaster come and rest upon you! - *ma-bi-yḥuṭṭ[i]-ʃ waaṭi* he is very proud. **4** to become exhausted, become weak,

collapse. - vn *ħaṭṭ, ħaṭaṭaan*; ava *ħaaṭiṭ*; pva *maħṭuuṭ*. ¶ *ħaṭṭ' min* to detract from, undermine. *bi-yħuṭṭ' min ʿimit-ha* he runs her down.

حطّة *ħaṭṭa* /pl *-aat*/ instance noun of *ħaṭṭ*. ‖ *ħaṭṭa ya baṭṭa* beginning phrase of child's rhyme used to set the rhythm in games.

حطّة *ħiṭṭa* /n/ degradation, debasement. *di ħiṭṭa f-faraf-ak* that's an insult to your honour. *huwwa ħiṭṭa f-ʕelt-u* he is a disgrace to his family.

أحطّ *ʔaħaṭṭ* /el/ more/most degenerate, more/most debased. *da-nta ʔaħaṭṭ' bani ʔaadam ʕumr-i ʿabilt-u* you're the basest man I've ever met!

حطيطة *ħaṭiiṭa* /adj invar/ exhausted, whacked, done in.

محطّ *maħaṭṭ* /n/ focal point, object, centre. *maħaṭṭ il-ʔanẓaar* the object of attention. ‖ *ħaṭṭ-i-lu maħaṭṭ* he intrigued against him.

محطّة *maħaṭṭa* /n pl *-aat*/ **1** alighting point, stop. *maħaṭṭit ʔutubiis* bus stop. *maħaṭṭit ʿaṭr* railway station. **2** station, installation. *maħaṭṭit banziin* petrol station, filling station. *maħaṭṭit ʔizaaʕa* or *maħaṭṭit ʔirsaal* radio station. *maħaṭṭit kahraba* power plant.

انحطّ *ʔitħaṭṭ* /vi/ **1a** to be put, be placed, be set. ‖ *ruuħ ʔitħaṭṭ* go sit down and get out of the way! - *ʔitħaṭṭ' ʔuʕʕud* sit down and shut up! **1b** to be applied, be administered. **2** to be paid. **3** to be bet, be laid as a bet. - iva *mitħaṭṭ*.

انحطّ *ʔinħaṭṭ* /vi/ **1** = *ʔitħaṭṭ*. **2**↑ to degenerate, become debased. *ʔaxlaaʿ-u nħaṭṭit* his morals degenerated. *ya munħaṭṭ* you degenerate! - vn *ʔinħiṭaaṭ*↑; ava *minħaṭṭ, munħaṭṭ*.

حطّط *ħaṭṭaṭ* /vt/ **1a** to lift down, lower. *ħaṭṭaṭit if-feela min ʕala raas-u* she took down the load from off his head. **1b** to unburden, (help to) unload. *ħaṭṭaṭ is-sitt' di* help that lady put down her load (from off her head). **2** to cause to pay. *ħaṭṭaṭ-ni ʕarbuun xamsa gneeh* he made me pay a five pound deposit. **3** to cause to alight. *ħâṭṭaṭt in-naħl[a] ʕaf-ʃagara* I brought the bees down on the tree. - vn *taħṭiiṭ*; ava/pva *miħaṭṭaṭ*.

انحطّط *ʔitħaṭṭaṭ* /vi/ passive of *ħaṭṭaṭ*. - iva *mitħaṭṭaṭ*.

ح ط م

حطّم *ħaṭṭam*↑ /vt/ to shatter, wreck. *ʔaʕṣaab-u mħaṭṭama* his nerves are wrecked. - vn *taħṭiim*; ava/pva *miħaṭṭam, muħaṭṭam*.

انحطّم *ʔitħaṭṭam* /vi/ to be shattered, be wrecked. - iva *mitħaṭṭam*.

ح ظ ر

حظر *ħaẓar (u)* /vt/ **1** to forbid, prohibit, ban. *ħaẓarit ʕaleehum il-liʕb' fiʃ-ʃaariʕ* she forbade them to play in the street. ‖ *wiqiʕ fil-maħẓuur* to take a false step. ‖ *ħaẓr' tagawwul* curfew. **2** to catch (s.o.) in the act. - vn *ħaẓr*; ava *ħaaẓir*; pva *maħẓuur*.

حظير، حضير *ħaḍiir* /n pl *ħiḍraan*/ *[rur]* **1** hall or corridor off which are situated a number of smaller rooms. **2** small roof-top room usually for storing milk and dairy products.

حظيرة *ħaẓiira*↑ /n pl *ħaẓaayir*/ enclosure or pen for animals.

اتحظر *ʔitħaẓar* /vi/ **1** to be forbidden, be prohibited. **2** to be caught in the act. - iva *mitħiẓir*.

انحظر *ʔinħaẓar* = *ʔitħaẓar*. - iva *minħiẓir*.

ح ظ ظ

حظّ *ħaẓẓ'* *(i)* /vt/ to give pleasure to, delight. *ʔallaah yiħiẓẓ-ak ya ʃeex [joc]* God grant you enjoyment! (said to s.o. in appreciation of his entertaining company). - vn *ħaẓẓ, ħaẓaẓaan*; ava *ħaaẓiẓ*; pva *maħẓuuẓ*.

حظّ *ħaẓẓ*[2] /n pl *ħuẓuuẓ*/ **1** luck, fortune. *ħaẓẓ-i maayil* I'm out of luck. *ħaẓẓ-a-ha zayy il-bumb* she has fantastic luck. *ʔana w-ħaẓẓ-i* I'll take my chance. *ʔid-dinya ħuẓuuẓ* life is a matter of luck. ‖ *ħaẓẓ-ak fi-ṭiiz-ak [abus]* you have incredibly good (or bad) luck! **2** enjoyment, fun. *ʔibn[a] ħaẓẓ* fun-lover, happy-go-lucky type. *saaʕit il-ħaẓẓ' ma-titʕawwaḍ-ʃ [prov]* you can't make up for a lost moment of pleasure. *xad ħaẓẓ-u minha w-sab-ha* he had his fill of pleasure from her and then left her.

محظوظ *maħẓuuẓ* /adj */ lucky.

اتحظّ *ʔitħaẓẓ* /vi/ to enjoy oneself, have a good time. *ʔitħaẓẓu ʿabl iʃ-ʃabaab ma yṭiir minkum* enjoy yourselves before youth flies from you! - ava *mitħaẓẓ*.

ح ظ ى see ح ض ى

ح ف د

حفيد *ħafiid*↑ /n pl *ʔaħfaad*/ grandson.

حفيدة *ħafiida*↑ /n pl *ʔaħfaad*/ granddaughter.

ح ف ر

حفر *ħafar (u)* /vt/ **1** to excavate, dig. *ħafaru maṭraħ il-ʕalaama* they dug up the place where the marker was. ‖ *ħafar il-biir bi-ʔibra [prov]* (to dig a well with a needle) to persevere with patience and skill. **2** to make a groove or grooves, chisel, carve etc. - vn *ħafr*; ava *ħaafir*; pva *maħfuur*.

حفرة *ħafra* /pl *-aat*/ instance noun of *ħafr*. ‖ *ħafra ʿafra* barren and uninhabited land, desolate area.

حافر *ħaafir* /n pl *ħawaafir*/ hoof.

حفرة *ħufra* /n pl *ħufar*/ hole, pit.

حفّار *ħaffaar* /n * and pl *ħaffaara*/ **1** digger, labourer

engaged in digging. **2** engraver. **3** woodpecker.
اتحفر *ʔitḥafar* /vi/ **1** to be excavated, be dug up. **2** to be marked with a groove or grooves, be chiselled, be carved, be etched. - iva *mitḥifir*.
انحفر *ʔinḥafar* = *ʔitḥafar*. - iva *minḥifir*.

ح ف ز

حفز *ḥafaz (i)* /vt/ to encourage, stimulate, give incentive to. - vn *ḥafz, ḥafazaan*; ava *ḥaafiz*.
حافز *ḥaafiz* /n pl *ḥawaafiz*/ incentive. *ʔil-ʔagr il-ʔiḍaafi yuʕtabar ḥaafiz lil-muwaẓẓaf* the extra pay is considered an incentive for the employee.

ح ف ض see ح ف ظ: *ḥafaḍ, ḥaafiḍ, ḥufaaḍ, maḥfaḍa, ʔitḥafaḍ, ʔinḥafaḍ, ḥaffaḍ, miḥaffaḍ, ʔitḥaffaḍ*

ح ف ط

حفاطة *ḥuffaaṭa* /n pl *-aat*/ six-holed single-reed pipe shorter and fatter than the *naay*. - also *ʕuffaaṭa*.

ح ف ظ

حفظ *ḥafaẓ (a)* /vt/ **1a** to keep, retain, store. *bi-yiḥfaẓu ʃwayya min il-ʔamḥ[a] ʕafaan yibʔa taʔaawi* they save some of the wheat for seed. *xud il-fuluus di ʔiḥfaẓ-ha ʕandak* take this money and keep it with you. ‖*ma-b-yiḥfaẓ-ʃ[i] gmiil* he is ungrateful. **1b** *[admin]* to file, put on file for reference. **1c** *[leg]* to suspend action on (a case). *ma daam iṣṭalaḥtu yibʔa l-buliiṣ yiḥfaẓ it-taḥʔiiʔ* since you have reached a settlement the police will drop the case. **2a** to protect, preserve (from harm). *ʔil-waraʔ bi-yiḥfaẓ-ha min it-turaab* the paper protects it from dust. *ʔallaah yiḥfaẓ-ak* God preserve you! (in response to praise and generous or kind words or actions). *fi-ḥifẓ illaah* (go) in God's safe-keeping! goodbye! **2b** to keep a watch on. *ʔiḥfaẓ lisaan-ak* watch your tongue! *ʔiḥfaẓ markaz-ak* (have a regard for your position) ≈ watch your step! **3** (also *ḥifiẓ, ḥafaḍ* or *ḥifiḍ*) **3a** to memorize, learn by heart. *ma-kan-ʃ[i] maʕaaya ʔalam fa-ḥafaẓt in-nimra* I didn't have a pencil on me, so I memorized the number. *ḥafaẓt il-ʔaṣiida kull-a-ha ʃ-talatt iyyaam* I got the whole poem off by heart in three days. **3b** to learn (a lesson). *ʔiza ma-ḥafaẓt[i]-ʃ id-dars[i] kwayyis ḥ-addii-k sifr* if you don't learn the lesson well, I'll give you a zero. ‖*ʔiḥna ḥafẓiin ik-kalaam da* we know all about that, that's not new to us. - vn *ḥifẓ, ḥifḍ*; ava *ḥaafiẓ, ḥaafiḍ*; pva *maḥfuuẓ, maḥfuuḍ*.
¶ *ḥifẓan ʕala↑* out of regard or concern for. *miʃ ḥ-aballaʏ il-buliiṣ ḥifẓan ʕala markaz-ak* I shall not inform the police so as not to jeopardize your position.

حافظ *ḥaafiẓ[1], ḥaafiḍ* /n pl *ḥuffaaẓ, ḥafaẓa/ [Isl]* one who has committed the Koran to memory.
حافظة *ḥafẓa* /n pl *-aat, ḥawaafiẓ*/ record of mail sent either interdepartmentally or by the postal system.
محفوظ *maḥfuuẓ* /adj/ **1** preserved, canned. *laḥma maḥfuuẓa* canned meat. — *maḥfuẓaat* /pl n/ **2** *[admin]* archives. **3** *[acad]* passages set for memorization in schools. *ʔiṭʕit maḥfuẓaat* a piece for memorization.
حفاظ *ḥufaaḍ* /n pl *-aat, ʔiḥfiḍa, ḥifíḍa*/ sanitary napkin.
حفيظ *ḥafiiẓ* /n/ Protector (epithet of God). *ya ḥafiiẓ* ≈ God protect us! (said on encountering something unpleasant or ugly).
محفظة *maḥfaẓa, maḥfaḍa↓* /n pl *maḥaafiẓ, maḥaafiḍ*/ wallet, billfold. ‖*ʃanṭa maḥfaza* zip-up case for papers.
اتحفظ *ʔitḥafaẓ, ʔitḥafaḍ* /vi/ passive of *ḥafaẓ*. - iva *mitḥifiẓ, mitḥifiḍ*.
انحفظ *ʔinḥafaḍ* = *ʔitḥafaẓ*. - iva *minḥifiẓ*.
حفّظ *ḥaffaẓ, ḥaffaḍ* /vt/ **1** to cause to commit to memory. *ḥaffaḍit-ni l-ʕinwaan* she made me memorize the address. *ʔiʃ-ʃeex bi-yḥaffaẓ-hum il-qurʔaan* the sheikh teaches them the Koran by rote. — *ḥaffaḍ* only **2** to bless (usually a baby) with the formula *miḥaffaḍ (min ir-radi)*. — /vi/ **3** to put on a sanitary napkin. - vn *taḥfiiẓ, taḥfiiḍ*; ava/pva *miḥaffaẓ, miḥaffaḍ*.
محفّظ *miḥaffaḍ* /pva/ ‖*miḥaffaḍ bi-suurit ir-raḥmaan* protected by the sura of the Merciful (i.e. Koran sura 55; phrase used instead of a child's name as a prophylactic against the evil eye). *ʔil-miḥaffaḍ ibn-ik feen* where's your son, bless him?
اتحفّظ *ʔitḥaffaẓ, ʔitḥaffaḍ* /vt/ **1** to be made to learn (s.th.) by memory. *ʔitḥaffaẓna l-qurʔaan biḍ-ḍarb* we were beaten into learning the Koran by heart. — /vi/ **2** to be learned by heart, be memorized. **3** (*ʔitḥaffaḍ* only) to put on a sanitary napkin. - ava/iva *mitḥaffaẓ*.
¶ *ʔitḥaffaẓ ʕala* to take custody of, take into custody. *ʔin-niyaaba tḥaffaẓit ʕala gism ig-gariima* the Prosecutor's office took custody of the material evidence of the crime. *ʔil-buliiṣ itḥaffaẓ ʕalee fit-taxʃiiba* the police took him into custody (and put him) in the lock-up.
تحفّظ *taḥaffuẓ↑* /n/ **1** aloofness, reserve. *kallim-ni bit-taḥaffuẓ* he spoke to mė aloofly. *bi-duun taḥaffuẓ* without reservation. **2** *taḥaffuẓaat* /pl n/ reservations. *ʔana liyya taḥaffuẓaat ʕala n-nuqṭa di* I have some reservations on that point.
تحفّظي *taḥaffuẓi: ḥabs[i] taḥaffuẓi* detention pending trial.
حافظ *ḥaafiẓ[2]* /vi/ **1** to give protection. *bi-nruff-u b-buṭaas ʕaʃaan yiḥaafiẓ ʕalee min il-mann* we spray it

with potash to protect it from aphids. *ma-ḥafiẓt'-ʃ ɛak-kutub illi sallift'haa-lak* you didn't take good care of the books I lent you. **2** to pay attention, give regard. *bi-yḥaafiẓ ɛala mawaɛiid-u* he is punctual. - vn *miḥafẓa, muḥafẓa, ḥifaaẓ*; ava *miḥaafiẓ, muḥaafiẓ*.

محافظة *muḥafẓa* /n pl *-aat/ [admin]* province, one of the twenty-five main administrative units into which Egypt is divided. ‖ *laazim ʕawaddi-k il-muḥafẓa* I must take you to the police!

محافظ *muḥaafiẓ* /n */ **1** governor of a province. **2** *[pol]* conservative. *ḥizb il-muḥaafiẓiin* the (British) Conservative Party. — /adj */ **3** conservative, traditional in outlook.

احتفظ *ʔiḥtafaẓ* /vi/ to retain possession. *b-aḥtifiẓ bii ka-ʕarfiif* I keep it as a record. *ʔiḥtafaẓu bil-buṭuula* they retained the championship. - vn *ʔiḥtifaaẓ*; ava *miḥtifiẓ, muḥtafiẓ*; pva *muḥtafaẓ*.

استحفظ *ʔistaḥfaẓ* **1** /vt/ to call upon (s.o.) to maintain and respect. **2**↓ /vi/ **2a** to be careful, take great care. *bi-yistaḥfaẓ ɛala kull' ɋirf* he treasures every penny. **2b** *[leg]* to apprehend. - vn *ʔistiḥfaaẓ*; ava *mistaḥfaẓ*.

ح ف ف

حفّ *ḥaff (i)* /vt/ **1** to surround, make a border around. *ḥaffeena ṣ-ṣuura b-firiiṭ* we put a ribbon round the edge of the picture. *maḥfuuf bi-maxaaṭir↑* surrounded by danger. **2** to trim, cut the edge off. *xud il-xaʃaba ḥiff-a-ha mig-gamb' ʃwayya* take the piece of wood and trim it from the side a little. **3** to depilate, remove unwanted hair from. — /vi/ **4** to brush (against s.th.). *maaʃi yḥiff' fil-ḥeeṭa* brushing up against the wall as he walks. - vn *ḥaff, ḥafafaan*; ava *ḥaafif*; pva *maḥfuuf*.

¶ *ḥaffa ɛala* (or *fi-*) to take too much of (e.g., food). *ḥaffa ɛal-fuul* (or *fil-fuul) lamma ma-fḍil-ʃ illa ɛeef* he ate the beans at such a rate that he found himself left with just bread (and no beans to eat it with).

حاف *ḥaaf* /adv/ by itself (either of bread without any accompaniment, which is a sign of want, or of food without bread, which is a sign of plenty). ‖ *ʔil-waaḥid yakul-ha ḥaaf ʕaḥsan ma yisraɋ* one would rather live on dry bread than steal. *min istaktar ɤumuus-u kal ḥaaf [prov]* ≈ one who overestimates his resources will soon have a real crisis. — /adjectivally/ *ɛeef ḥaaf* bread eaten alone.

حافّة *ḥaffa, ḥaaffa↑* /n pl *-aat, ḥawaafi, ḥawaff↑*/ edge, border. *rigl-u ɛala ḥaffit il-ɋabr* he has one foot in the grave.

حفوف *ḥufuuf* /n/ **1** depilation, removal of unwanted hair from the body. **2** depilatory paste.

حفيف *ḥafiif* /n/ rustle, rustling sound.

اتحفّ *ʔitḥaff* /vi/ **1** to be surrounded. **2** to be trimmed. **3** to be depilated. - iva *miṭḥaff*.

انحفّ *ʔinḥaff* = *ʔitḥaff*. - iva *minḥaff*.

حفّف *ḥaffif* /vt/ **1** to measure out (a quantity of goods) with niggardly exactitude, give (exact weight) and not a little more. **2** to depilate (a part of the body) with depilatory paste. - vn *taḥfiif*; ava/pva *miḥaffif*.

اتحفّف *ʔitḥaffif* /vi/ **1a** to depilate oneself, pluck out unwanted hair. **1b** to be depilated (of a part of the body). **2** to pay (excessive) attention to one's grooming. *miṭḥaffifa ɛal-ʕaaxir* dolled up to the nines. **3** passive of *ḥaffif* 1. - ava/iva *miṭḥaffif*.

ح ف ل

حفلة *ḥafla* /n pl *ḥafalaat*/ **1a** ceremony. *ḥaflit taʕbiin* memorial ceremony. **1b** party, celebration. *ḥaflit ɛiid milaad* a birthday party. **2** performance. *ḥaflit sinima* a cinema performance. *ḥaflit musiiqa* a concert.

محفل *maḥfal* /n pl *maḥaafil*/ **1** *[rur]* procession. **2** (masonic) lodge.

احتفل *ʔiḥtafal* /vi/ **1** to hold a celebration. *ʔiḥtafalu b-ɛiid gawaz-hum* they celebrated their wedding anniversary. **2** to give a warm welcome. *ʔiḥtafalu bil-ḥuggaag fil-maṭaar* they received the pilgrims at the airport with great rejoicing. - vn *ʔiḥtifaal*; ava *miḥtifil*.

احتفال *ʔiḥtifaal* /n pl *-aat*/ celebration.

ح ف ل ط

حفلط *ḥaflaṭ* /vt/ to overdo, be fussy in. *bi-tḥaflaṭ fi-wiʃʃ-a-ha* she overdoes her make-up. *ʔinta bi-tḥaflaṭ ɳafs-ak kida leeh* why are you so fussy about your appearance? *kalaam-u mḥaflaṭ* he talks in an exaggerated way (in order to impress). - vn *ḥaflaṭa*; ava/pva *miḥaflaṭ*.

حفلاط *ḥiflaaṭ* /adj/ foppish, extravagant in dress and manner.

حفلوط *ḥafluuṭ* = *ḥiflaaṭ*.

اتحفلط *ʔitḥaflaṭ* /vi/ **1** to preen oneself. **2** to be adorned or arranged in an extravagant manner. - ava/iva *miṭḥaflaṭ*.

ح ف ن

حفن *ḥafan (i)* /vt/ to take in one's cupped hands. ‖ *bi-yiḥfin wi-yiddii* he gives to him without measure, he gives to him freely. - vn *ḥafn*; ava *ḥaafin*; pva *maḥfuun*.

حفنة *ḥifna, ḥafna* /n pl *-aat, ḥifan*/ handful. *ḥifnit ṣabuun* a handful of soap.

حفان *ḥifaan* /n pl *ʔiḥfina, ḥifína*/ quantity held by both hands cupped together. ‖ *ɛayyaṭt' min kull' ɛeen ḥifaan* ≈ I cried buckets.

اتحفن ʔitḥafan /vi/ to be taken in cupped hands. -iva *mitḥifin*.
انحفن ʔinḥafan = ʔitḥafan. -iva *minḥifin*.

ح ف ى
حفى *ḥifi (a)* /vi/ to wear out one's shoes completely. *ḥa-tistanna lamma l-ʔawlaad yiḥfu ʕala ma tiftiri-lhum gizam* are you going to wait till the children have gone right through their shoes (and are going barefoot) before you buy them new ones? ‖ *riglee ḥifyit* to wear one's feet off, go far and wide (in search of s.th.), as in *dawwart[a] ʕala qiṭaʕ ʏiyaar lamma riglay-ya ḥifyit* I searched high and low for spare parts. -vn *ḥafa, ḥafayaan*; ava *ḥaafi, ḥafyaan*.
¶ *ḥifi wara* (or *ʕala*) to pursue, toil after. *ṭuul ʕumr-i-na ḥafyaniin wara luqmit il-ʕeef* we've spent all our lives chasing a living. *ḥifiina ʕaleek ʔimbaariḥ ma-laqena-k-ʃ* we wore ourselves out looking for you yesterday, but couldn't find you.
حافى *ḥaafi* /adj */ barefoot. *daayis ḥaafi leeh* why are you going barefoot?

ح ق ب
حقيبة *ḥaqiiba↑* /n pl *ḥaqaayib*/ satchel, bag. *ḥaqiiba diblumasiyya* diplomatic bag.

ح ق د
حقد *ḥaqad (i)* /vi/ to hold a grudge. *dayman yiḥqid ʕala xalq illaah* he's always holding grudges against people. -vn *ḥiqd, ḥiqd, ḥaqadaan*; ava *ḥaaqid*; pva *maḥquud*.
حقد *ḥiqd, ḥiqd* /n pl *ʔaḥqaad*/ hatred, rancour, spite. *fii ʔaḥqaad qadiima been il-ʕelteen* there are old feuds between the two families.

ح ق ر
حقير *ḥaqiir↑* /adj */ despicable.
أحقر *ʔaḥqar* /el/ more/most despicable.
حقّر *ḥaqqar* /vt/ to disparage. -vn *taḥqiir*.
احتقر *ʔiḥtaqar* /vt/ to despise. -vn *ʔiḥtiqaar*; ava *miḥtiqir*; pva *muḥtaqar*.
استحقر *ʔistaḥqar↓* /vt/ to despise. -vn *ʔistiḥqaar*; ava *mistaḥqar*.

ح ق ق
حقّ *ḥaqq[1] (i, u)* **1** /vt/ **1a** to find to be in the wrong. *ʔiḥna smiʕna lli ḥaṣal minnu w-ḥaqqenaa-lik* we have heard what he did and consider that he is in the wrong rather than you (or: for what he did to you). **1b** to admit (o.s.) to be in the wrong, blame (o.s.). *ʔana gaay ʔaḥuqq[i] nafs-i liik* I am coming to apologize to you (for what I have done). **2** /vi; imperf only/ to be appropriate or justifiable. *ma-yḥiqq[i]-lak-ʃ[i] titkallim biṭ-ṭariiqa di* you shouldn't be talking this way. ‖ *ʔilli yḥiqq-i-lak ʔiʕmil-u* do as you wish (since there's nothing to stop you). -*yiḥiqq-i-lu yquul kida* he's not to blame for talking that way (since no one seems to be able to shut him up, or: since everyone else is talking nonsense). -vn *ḥaqq, ḥaqaqaan*; ava *ḥaaqiq*; pva *maḥquuq*.
¶ *ḥaqq[a] ʕala* to kiss (e.g., the head) as a way of apology. *ḥuqq[a] ʕala ras-ha* kiss her head (in apology).
محقوق *maḥquuq* /adj */ in the wrong. *hiyya maḥquuqa-ma-kan-ʃ[i] yṣaḥḥ[i] tiʕmil kida* she's at fault; she shouldn't have done that.
حقّ *ḥaqq[2]* /n/ **1a** truth. *qul-li l-ḥaqq* tell me the truth. *ʔil-ḥaqq[i] yiʕla wala yiʕlaa-ʃ ʕalee ʕaali [prov]* (the truth rises and no-one, no matter how high, may rise above it) ≈ the truth will always out. *kilmit il-ḥaqq[i] ṭilʕit* (or *itqaalit*) the truth is out! now we have it! *kilmit il-ḥaqq[i] tuqaf fiz-zoor [prov]* ≈ people cannot accept the truth. ‖ *bi-ḥaqq* or *bil-ḥaqq* or *bi-ḥaqq[i] w-ḥaqiiq* or *bi-ḥaqq[i] w-ḥaqiiqi* really and truly, as in *tibqa ṣaḥb-i b-ḥaqq* then you are truly my friend, *bil-ḥaqq[a] ḥaṣal kida* honestly that's what happened, *ʔik-kalaam da b-ḥaqq[i] w-ḥaqiiqi* is that really so? is that on the level? -*ma-ḥadd[i]-ʃ ʕaarif yaaxud minnak ḥaqq[i] wala baaṭil* no one can get anywhere with you, trying to get something out of you is like trying to get blood out of a stone. -*ʕirif ʔinn allaah ḥaqq* ≈ to mend one's ways, as in *miʃ ḥ-aftiri minnu ʕafaan yitʕallim wi-yiʕraf ʔinn allaah ḥaqq[i] wi-ybiiʕ bit-tasʕiira* I shan't buy from him so that he may learn a lesson and mend his ways and sell at the fixed price. **1b** *ʔil-ḥaqq* Truth (epithet of God). **2** /in constr/ the appropriate thing for, what is fitting for. *ḥaqq-ak taakul* you should eat. *kaan ḥaqq-i ṭaradt-u-hum* I should have thrown them out. *kaan ḥaqq[i] gooz-ik yibuus riglee-ki* your husband should have kissed your feet. ‖ *bil-ḥaqq* (also *ʔilla bil-ḥaqq* or *min ḥaqq*) by the way, apropos of that, as in *(ʔilla) bil-ḥaqq[a] ʕala ziкr iz-zawaag* ... by the way, talking of marriage .... **3** cost, what is payable (for an item bought or service rendered), worth. *ʔil-qalam da ḥaqq-u kaam* how much does this pencil cost? *ḥaqq if-faʏʏaala ʕan fahr[i] tamanya* the maid's wages for August. — /pl *ḥuquuq*/ **4** right, title, claim. *b-aṭaalib bi-ḥaqq-i* I demand my rights. *ḥuquuq madaniyya w-qanuniyya* civil and legal rights. *ḥuquuq il-ʔadaaʔ il-ʕalani [broadc]* royalties paid to artists for the broadcasting of their work. *liyya l-ḥaqq[i] f-ʔabuneeh* I'm entitled to a season ticket. *ṣaaḥib il-ḥaqq[a] ʕeen-u qawiyya [prov]* he who has right on his side acts boldly. *bayyin ḥaqq-ak*

wi-siib-u [prov] establish your rights and then drop the matter. ‖ *ʕil-ħaqq' wil-mustaħaqq* full details of entitlement, as in *ħ-aqawwim ʕaħsan muħaami ɛaʃaan yibayyin il-ħaqq' wil-mustahaqq* I'll hire the best lawyer to make clear what is owned by whom. - *liik* (or *ɛandak* or *maɛaak) ħaqq* (1) you're right, what you say is right. (2) you have the right, as in *law ḍarab-ak yibqa liik ħaqq' tiḍrab-u* if he hits you you have the right to hit him. - *ɛala ħaqq* in the right, as in *ʕiz-zibuun dayman ɛala ħaqq* the customer is always right. - *ʕil-ħaqq[a] ɛaleek* you are in the wrong. - *ħaqq-ak ɛalayya* (1) I owe you an apology. (2) rely on me to defend your rights (said to one angered or upset by the action of a third party). - *ħaqq-i ɛandak* you owe me an apology. - *fi-ħaqq-* with regard to, (s.o.) as in *ʕik-kalaam da wiħiʃ fi-ħaqq-a-ha* such talk could damage her reputation, *ɋaalu kalaam kuwayyis fi-ħaqq-ak* they spoke well of you, *ʕit-tuhma sabta f-ħaqq-u* the accusation has been proved against him. - *wi-ħaqq* ... (I swear to do s.th.) by my obligation to ..., as in *wi-ħaqq' gaah in-nabi la-ʕagib-lak ɛarabiyya lamma titgawwiz* by (my obligation to) the mighty Prophet, I swear I'll get you a car when you get married, *wi-ħaqq' min xallaa-k bani ʕaadam ħ-axalli wiff-ak ʃawaariɛ* by what I owe to Him Who made even you a man, I'll cut roads all over your face! - *xad ħaqq-(u)* to get (its) due (of attention, time etc.), as in *lamma f-fuɤl' ykuun waaxid ħaqq-u* when the work is being done as it should be, *ʕil-ɛeef ma-xad-ʃ' ħaqq-u fit-taxmiir* the bread wasn't left to rise long enough. - *kal ħaqq-(u)* to infringe the rights of (s.o.), as in *ɛumr-i-na ma-kalna ħaqq[a] ħadd* we've never treated anyone unjustly. - *ʕil-ɛeef wil-malħ' lii ħaqq* breaking bread (with another) establishes obligations. — *ħuquuq* /pl n/ **5** law (as an academic discipline). *kulliyyit il-ħuquuq* the faculty of law. *xirriig ħuquuq* a graduate in law.

¶ *ħaqq' ma* in return for, a compensation for. *maʃʃii-li ʃ-fuɤlaana di ħaqq' ma saɛidt-ak* get this business seen to for me in return for my having helped you.

حقّة *ħaqqa* /adv/ honestly, really, truly. *m-aqdar-ʃ' ʕaqul-lik ħaqqa xadamtii-na qadd' ʕeeh* honestly, I can't tell you how much help you've been to us! *ħaqqa l-walad bi-yzaakir ʈuul is-sana* as God's my witness, the boy studies all year long! *ħaqqa nta xadt' fluus-ak* I say, did you really get your money?

حقّاني *ħaqqaani* /adj */ just, fair. *raagil ʈayyib wi-ħaqqaani* a decent and fair man.

حقّانيّة *ħaqqaniyya: wizaarit il-ħaqqaniyya [obsol]* the Ministry of Justice.

حقّ *ħuqq* /n pl *ʕiħqaaq, ħiqaaq/* **1** small container, box, pot. **2** pelvis. ‖ *fooq ħuqq-u w-duqq-u* (1) ≈ finish him off immediately, don't hesitate to punish him. (2) choose the most efficient plan and carry it out without hesitation. **3**↓ clay body of a funnel-shaped hand drum, (loosely) any of a variety of clay or wood funnel-shaped drums (see Pl.J, 6).

حقّة *ħuqqa* = *ħuqq*.

أحقّ *ʕaħaqq* /el/ more/most entitled, more/most deserving. *ʕana ʕaħaqq' minnak bii* I have a better right to it than you.

حقيق *ħaqiiq: bi-ħaqq' w-ħaqiiq* really and truly.

حقيقة *ħaqiiqa* /n pl *ħaqaayiq/* fact, truth. *fii ħaqiiqa muhimma gamb il-ħaqiiqa di* there is (another) important fact (to consider) along with that one. *fil-ħaqiiqa* in fact. ‖ *ʕil-ħaqiiqa* the fact is, to tell the truth, as in *ʕil-ħaqiiqa ʕiħna saɛidna ʕahl-a-ha f-kull[a] ħaaga* the fact is we helped her family in everything. *kaanit il-ħaqiiqa ɛagbaa-ni* to tell the truth she had taken my fancy.

حقيقي *ħaqiiqi* **1** /adj/ **1a** true, verifiable. *di qiṣṣa ħaqiqiyya* this is a true story. **1b** real, genuine. *da miʃ ħall[a] ħaqiiqi* that's not a real solution. **2** /adv/ certainly, for sure. *di wiħʃa ħaqiiqi* this is indeed bad. *ħaqiiqi ma-kisbuu-ʃ il-matʃ' laakin liɛbu kwayyis* it's true they didn't win the match, but they played well. *bi-ħaqq' w-ħaqiiqi* really and truly.

اتحقّ *ʕitħaqq* /vi/ **1** to be found to be in the wrong. **2** to admit one's fault. *ʕana ħ-atħaqq' lii* I'll apologize to him. - ava/iva *mitħaqq*.

انحقّ *ʕinħaqq* = *ʕitħaqq*. - ava/iva *minħaqq*.

حقّق *ħaqqaq* **1** /vt/ to make (s.th.) come true, fulfil. *rabb-i-na yħaqqaq-lak muraad-ak* may God make your wish come true. **2** /vi/ to carry out an investigation, inquiry or interrogation. *bi-yħaqqaq maɛa l-muttaham* he's interrogating the accused. - vn *taħqiiq*; ava *miħaqqaq*.

¶ *ħaqqaq fi-* to scrutinize. *ħaqqaqt' fil-ɛafara gneeh ɛafaan ʕaɛraf ʕin kaanit muzayyafa walla laʔ* I looked closely at the ten-pound note to see if it was counterfeit or not.

تحقيق *taħqiiq* /n pl *-aat/* **1** interrogation. *fii maɛaak taħqiiq bukra fil-qism* you will be interrogated tomorrow at the police station. **2** investigation, inquiry. *ʕil-buliiṣ farag ɛannu rahn it-taħqiiq* the police let him go pending investigation. ‖ *taħqiiq ṣuħafi* reportage.

محقّق *muħaqqiq, muħaqqiqˆ* /n */ **1** interrogator. **2** investigator.

اتحقّق *ʕitħaqqaq* /vi/ **1** to be fulfilled, come true.

2 (impersonal) passive of *ħaqqaq* 2. *ʃil-muttaham itħaqqaq maʕaa* the accused was interrogated. - ava/iva *mitħaqqaq*.

¶ *ʃitħaqqiq min* (or *fi-*) to scrutinize.

استحقّ *ʃistaħaqq* **1** /vt/ to deserve, be entitled to, merit. *yistaħaqq[a] ʃugra ʕala kida* is he really entitled to be paid for that? *yistaħaqq[a] ʕalʃa* he deserves a beating. **2** /vi/ to fall due. *ʃil-mablaʁ da yistaħaqq[a] ʕalee yoom xamastaaʃar maayu* he must pay this sum by May the fifteenth. *miʃ mistaħaqq* ... not worth ..., as in *ʃil-ħikaaya di miʃ mistaħaqqa d-dawʃa di kull-a-ha* the matter is not worth all this fuss. - vn *ʃistiħqaaq*; ava/pva *mistaħaqq*.

مستحقّ *mustaħaqq* /adj/ (fallen) due, owing. *ʃil-filuus il-mustaħaqqa ʕaleek* the money you are due to pay. ‖ *ʃil-ħaqq[i] wil-mustaħaqq* see *ħaqq* 4.

استحقّق *ʃistiħaqqaq↓* /vi/ to look carefully, peer. - ava *mistiħaqqaq*.

ح ق ل

حقل *ħaql↑* /n pl *ħuquul, ħuqquul*/ **1** field, plot of land. *ħuqquul bitrool* oil fields. **2** area of activity. *ħaql it-taʕliim ig-gaamiʕi* the field of university of education. **3** tabulation (on a typewriter).

ح ق ن

حقن *ħaqan (i)* /vt/ to inject. *bi-yiħqinu l-firaax ʕalaʃaan ma-tiʕyaa-ʃ* they inject the chickens so that they do not contract diseases. - vn *ħaqn, ħaqanaan*; ava *ħaaqin*; pva *maħquun*.

حقنة *ħuqna* /n pl *ħuqan*/ **1** injection. ‖ *ħuqna ʃaragiyya* enema. **2** hypodermic syringe. ‖ *raagil ħuqna* a thorough pest. **3** malicious story told as an incitement. *ʃil-ħuqan illi mudiir maktab-u b-yiddii-haa-lu zaʕʕilit-u minni* the tales his administrative assistant tells him have set him against me. **4** psychological boost. *natiigit l-imtiħaan kaanit ħuqna tamaam bin-nisbaa-lu* the exam result was a real shot in the arm for him.

اتحقن *ʃitħaqan* /vi/ to be injected. - iva *mitħiqin*.

انحقن *ʃinħaqan = ʃitħaqan*. - iva *minħiqin*.

احتقن *ʃiħtaqan* /vi/ *[path]* **1** to become inflamed. *ʂubaaʕ-i ħtaqan* my finger became inflamed. **2** to become congested. - vn *ʃiħtiqaan*; ava *miħtiqin*.

ح ك ح ك

حكحك *ħakħak* /vt/ to rub clean or smooth with repeated action. *qaʕadit tiħakħak riglee-ha b-ħagar il-ħammaam* she rubbed away at her feet with the pumice stone. ‖ *raagil miħakħak* a finicky man. - vn *ħakħaka*; ava/pva *miħakħak*.

اتحكحك *ʃitħakħak* /vi/ to be rubbed clean or smooth. - iva *mitħakħak*.

ح ك ر

حكر *ħikr* /n/ land or property owned by the government and leased to a private tenant.

احتكر *ʃiħtakar* /vt/ to monopolize. *ma-yʂaħħ[i]-ʃ ħadd[i] yiħtikir ʃaqwaat if-faʕb* no one should monopolize foodstuffs on which the masses live. - vn *ʃiħtikaar*; ava *miħtikir*.

احتكار *ʃiħtikaar* /n pl *-aat*/ monopoly.

ح ك ك

حكّ *ħakk (u, i)* **1** /vt/ to rub. *laazim tiħukk il-marham ʕal-garħ[i] marriteen fil-yoom* you should rub the ointment into the wound twice daily. ‖ *ħagar ħakk* gem-polishing stone. **2** /vi/ to rub together, grate. *lamma ʃaduus ʕad-dibriyaaj it-turuus bi-tħukk* when I step on the clutch the gears grind. ‖ *maaʃi yħukk* he stumbles along. - vn *ħakk, ħakakaan*; ava *ħaakik*; pva *maħkuuk*.

حكّة *ħakka[1]* **1** /inst n, pl *-aat*/ a rubbing, a scraping, a grinding. **2** /n/ *[path]* scabies.

حكّاك *ħakkaak: ħagar ħakkaak* pumice stone.

اتحكّ *ʃitħakk* /vi/ to be rubbed. - iva *mitħakk*.

انحكّ *ʃinħakk = ʃitħakk*. - iva *minħakk*.

احتكّ *ʃiħtakk* /vi/ **1** to clash, get into conflict (with s.o.). *xallii-k fi-ħaal-ak ma-tiħtakk[i]-ʃ bi-ħadd* mind your own business and don't interfere with anyone else. **2** to be in contact, have dealings (with s.o.). - vn *ʃiħtikaak*; ava *miħtakk*.

احتكاك *ʃiħtikaak* /n/ **1** friction. **2** social intercourse. *ʃil-iħtikaak bin-naas bi-yʕallim iṭ-ṭifl izzaay yitʕaamil maʕa l-mugtamaʕ* contact with people teaches the child how to deal with society.

ح ك م

حكم *ħakam[1] (u)* /vt/ **1a** to rule over, govern. *ħukm iʃ-faʕb[i] liʃ-faʕb* the rule of the people by the people. ‖ *ħukm il-ħaakim fil-maħkuum* tyranny, oppression, as in *bi-yʕamluu-na ħukm il-ħaakim fil-maħkuum* they treat us like slaves. **1b** to arbitrate in. *miin ħa-yuħkum il-matʃ* who will referee the match? **1c** to declare (a verdict). *ʃil-maħkama ħakamit baraaʃa* the court declared a verdict of not guilty. **2a** to control, regulate. *ṭalʕa bitt[i] mayʂa ma-ħadd[i]-ʃ ʕaarif yuħkum-ha* she is turning into a spoilt girl - no one can control her. *bi-yʃidd il-xeeṭ ʕaʃaan yuħkum taxaanit il-muuna* he pulls the string tight to regulate the thickness of the mortar. ‖ *ʃana maħkuum bi-waqt* my time is limited. **2b** to hold tightly in position, grip. *ʃil-wiʃʃeen*

bi-yqaffilu l-mutoor wi-b-yuḥkumuu the two surfaces close up the motor and hold it together. **3** to coincide with. *yuḥkum yoom ʕarbaʕ* it falls on a Wednesday. — /vi/ **4** to pass judgement, declare a verdict. *ḥakamu liyya* they passed judgement in my favour. *ḥakamu ʕalayya* they condemned me. *ʔil-qaaḍi b-yuḥkum bi-farʕ il-muslimiin* the judge rules according to Muslim law (i.e. with justice). *rabb-i-na ḥakam ʕalayya ʔaʕiif fil-ḥaraam* Our Lord condemned me to live in sin. || *ʔiẓ-ẓuruuf ḥakamit bi-kida* circumstances so ruled. - *ma-yuḥkum-ʃ [women in trad soc]* ≈ God forbid! how could you ever think such a thing? (sarcastically, in badinage). - /impersonally/ *ḥakamit kida* this is the way it (has) happened (and there is nothing anyone can do about it). **5** to grip, hold tightly. *ʔiṣ-ṣamuula b-tuḥkum ʕal-ʔamyant* the nut grips onto the asbestos. - vn *ḥukm*; ava *ḥaakim*; pva *maḥkuum*.

¶ *ḥakam ʕala* /usually imperf and neg/ to possess, as in *ma-yuḥkum-ʃ illa ʕala murattab-u* he has nothing but his salary. - *ḥakam ʔilla* to insist, as in *ʔumm-u ḥakamit ʔilla yruuḥ il-madrasa* his mother insisted that he go to school.

حكم *ḥakam*[2] *(i)* /vt/ to exercise firm control over. *ʔiḥkim iid-ak* tighten your grip. *ʔiḥkim in-niʃaan* take firm aim. - vn *ḥakamaan*; ava *ḥaakim*; pva *maḥkuum*.

حكم *ḥukm* /n pl *ʔaḥkaam*/ **1** judgement, verdict, sentence. *ḥuwwa waaxid ḥukm' xamastaaʃar sana* he's been sentenced to fifteen years. || *ʔiḍ-ḍaruura liiha ʔaḥkaam* ≈ privation compels people to do things they would not normally consider. **2** stipulation, provision. *ʔaḥkaam qanuun il-ʔigraʔaat ig-ginaʔiyya* the stipulations of the criminal procedures law. — /adv/ **3** imperatively, necessarily. *ḥukm' laazim nizuur-u* we absolutely must visit him.

حاكم *ḥaakim*[1] /n/ **1** /pl *ḥukkaam*/ ruler. **2** /pl *ḥawaakim*/ any of a variety of control or adjust devices (e.g., valve, stabilizer). — /conj/ **3** because, for. *ma-ruḥt'-ʃ if-fuxl in-nahar-da ḥaakim ʔana ma-nimt'-ʃ kiwayyis* I didn't go to work today because I hadn't slept well. *kallim-ni b-zooq ḥaakim ʔana m-agii-ʃ bil-ʕafya* speak to me politely - brusqueness doesn't work on me.

حكمة *ḥikma* /n/ **1** wisdom. || *ḥikmit-ak ya rabb* ≈ Lord, your wisdom is too deep for man to understand (said in the face of an incomprehensible event). - *di ḥikmit rabb-i-na* (such is our Lord's wisdom) it's beyond our comprehension, but this is the way things are. - *ʔamma ḥikam* how very strange! **2** /pl *ḥikam*/ maxim, adage.

حكم *ḥakam*[3] /n/ **1** /pl *ḥukkaam*/ referee, umpire, arbiter, judge. || *xaṣm' w-ḥakam [prov]* opponent and judge (at one and the same time). **2** /no pl/ Righteous Judge (epithet of God).

حكمة *ḥakama* /n pl *-aat*/ **1** thick pad placed under the yoke of a draught animal to prevent chafing. **2** bit (of a bridle).

حكومة *ḥukuuma* /n pl *-aat*/ **1** government. || *bil-ḥukuuma* by force, as in *miʃ xaarig wala bil-ḥukuuma* nothing will force me to go out. - *raaḥ yiḥaasib il-ḥukuuma [slang]* he went to the lavatory. **2** *ʔil-ḥukuuma [slang]* the wife, the missus.

حكومى *ḥukuumi* /adj */ governmental. *ʔil-gihaat il-ḥukumiyya* government bodies.

حكيم *ḥakiim* /pl *ḥukama*/ **1** /n/ physician, doctor. **2** /adj/ wise, sensible, prudent. *xad il-ʕalqa lli mwaṣṣi ʕaleeha l-ḥakiim* he got the beating a wise man would prescribe for the likes of him (i.e. the beating he deserves). — /no pl/ **3** /n/ the All-wise (epithet of God).

حكيمة *ḥakiima* /n pl *-aat*/ **1** woman doctor. **2** qualified nurse or midwife.

محكمة *maḥkama* **1** /n pl *maḥaakim*/ court of law. **2** /interj/ *[leg]* court in session! (call by court usher to announce that the court is convened).

اتحكم *ʔitḥakam* /vi/ **1** to be ruled, be governed. **2** to be controlled, be regulated. **3** to be held tightly in position, be gripped. **4** to be refereed. **5** to be passed (of a sentence). - iva *miṭḥikim*.

حكّم *ḥakkim* **1** /vt/ to appoint as judge or arbitrator. *law ḥakkimuu-ni ʕala s-sitt' di la-ʔaglid-ha fil-midaan* if they put me in judgement over that lady I'd have her flogged in the square! *hay ʔiṭ taḥkiim* committee of arbiters. *kaan laazim ʔaḥakkim ʕaql-i* I should have used my head. || *ḥakkim raʔy-(u)* he insisted. **2** to put in control. *rabb-i-na ma-yḥakkim-ak ʕala walaaya [women in trad soc]* may God never put you in charge of a helpless woman! **3** to insist on. *ḥakkimt innaha tinzil mil-beet is-saaʕa talaata ṣ-ṣubḥ* I insisted on her leaving the house at three in the morning. — /vi/ **4** to referee. *miin ḥa-yḥakkim fil-matʃ* who will referee the match? **5** to fix tightly, seal well. *ḥakkim ʕala l-ḥanafiyya* turn the tap off tightly. - vn *taḥkiim*; ava/pva *miḥakkim*.

اتحكّم *ʔitḥakkim* /vi/ **1** to be placed in judgement. *ʔitḥakkim ʕalayya lli yiswa wi-lli ma-yiswaaʃ* every Tom, Dick and Harry was allowed to do whatever he liked with me. **2** to become determined, insist. *ʔitḥakkim ʕas-safar in-nahar-da* he insisted on travelling today. -vn *taḥakkum*; ava/iva *miṭḥakkim*.

¶ *ʔitḥakkim fi-* to keep under control. *tiqdar titḥakkim fil-maxraṭa zayy' ma-nta ʕaayiz* you can control the lathe in any way you like. *bi-titḥakkim fiyya kida leeh* why are you trying to keep me under your thumb.

حاكم *ħaakim*[2] /vt/ to try, take to court. *ħa-nħaakim il-muhandis illi rakkib il-kablaat ʏalaṭ* we're going to prosecute the engineer who installed the cables wrongly. - vn *miħakma*; ava *miħaakim*.

محاكمة *muħakma* /n pl *-aat*/ trial.

اتحاكم *ʔitħaakim* /vi/ to be tried, be taken to court. - iva *mitħaakim*.

محكم *muḥkam* /adj/ sealed, tightly closed.

احتكم *ʔiḥtakam* /vi/ to gain possession. *ʔaah law ʔaḥtikim ɛala ʔalf*[i] *gneeh* ah, if only I could get hold of a thousand pounds! - ava *miḥtikim*.

استحكم *ʔistaḥkim* /vi/ **1**↓ to gain possession. *ʔistaḥkim ɛala ɛmarteen* he became the owner of two apartment buildings. **2**↑ to take hold, become entrenched. *ʔil-fikra staḥkimit fi-muxx-i* the idea took hold of me. *maʃaakil mustaḥkima* chronic problems. - vn *ʔistiḥkaam*; ava *mistaḥkim, mustaḥkim*.

استحكامات *ʔistiḥkamaat* /pl n/ *[mil]* fortifications.

استحكّم *ʔistiḥakkim*↓ /vi/ to behave tyrannically. - ava *mistiḥakkim*.

ح ك م د -

حكمدار *ḥikimdaar* <T *hükümdar*> /n pl *-iyya*/ one with executive authority (e.g., officer in charge of a police station, plane crew, tank crew etc., prefect in a school).

حكمداريّة *ḥikimdariyya* /n pl *-aat*/ chief of police's office.

ح ك ى

حكى *ḥaka (i)* **1** /vt/ to tell, relate. *ḥ-aḥkii-lak ʔizzaay iggawwizt* I'll tell you the story of how I got married. **2** /vi/ to tell stories. *qaɛadna niḥki ɛala lli ʃufnaa fil-ḥarb* we sat around telling stories about what we saw in the war. - vn *ḥaky, ḥikaaya*; ava *ḥaaki*; pva *maḥki*.

حكاية *ḥikaaya* /n/ **1** matter, affair. *ʔil-ḥikaaya di zaadit ɛan ḥadd-a-ha* this business has gone too far. *ʔeeh ḥikayt-u maɛaak* what's his business with you? *ma-xadt*[i]*-ʃ baal-i mil-ḥikaaya di* I didn't think of that. *da-nta ḥkayt-ak mihabbiba* you're in a terrible fix. *ʔis-sittaat bi-yiɛmilu l-ḥikaaya di* women do this sort of thing. || *ʔeeh ḥikayt-ak* what's the matter with you? **2** /pl *-aat, ḥakaawi*↓/ story, tale. *ʔir-raagil da ɋal-li ḥkaaya ʏariiba* that man told me a strange story.

اتحكى *ʔitḥaka* /vi/ to be told (of a story). *ḥikaaya ʏariiba tḥakit ɛannu* a strange tale was told of him. - iva *mitḥiki*.

انحكى *ʔinḥaka* = *ʔitḥaka*. - iva *minḥiki*.

حكّى *ḥakka*[2] **1** /vt/ to tell (s.o.) stories, entertain (s.o.) with tales, the news etc. *ḥakkii-na ʃwayya* come and chat with us and tell us what's been going on. **2** /vi/ to chat. *ɋaɛdiin niḥakki maɛa baɛḍ* we're chatting to one another. - vn *taḥkiyya*; ava *miḥakki*.

ح ل ب [1]

حلب *ḥalab (i)* **1** /vt/ to milk. *niɋuul ʈoor yiɋuulu ʔiḥlibuu [prov]* (we say it's a bull, they say milk it) we're talking at cross purposes. || *tiɋul-ʃ*[i] *b-yiḥlibuu* you'd say they keep him to milk him (from the way they take such good care of him). - *ḥalb in-nuguum [magic]* a ceremony performed to gain or regain love. **2** /vi/ to give milk, produce milk. *ʔil-baɋara b-tiḥlib kitiir* the cow gives a lot of milk. - vn *ḥalb, ḥilaaba, ḥaliib*; ava *ḥaalib*; pva *maḥluub*.

حليب *ḥaliib* /n/ milk. - /adjectivally/ *laban ḥaliib* (fresh) milk.

حليبة *ḥaliiba: ɋaṭaɛ il-ḥaliiba wir-rayba* (to cut off the fresh milk and the curdled) to cut off all help, as in *ʔil-ḥukuuma ɋaṭaɛit l-ḥaliiba wir-rayba* the government has left us completely in the lurch.

محلب *maḥlab* /n/ **1** *[bot]* mahaleb (Prunus mahaleb). **2** a sort of crisp round bread or biscuit made with mahaleb.

محلبة *maḥlaba* /n pl *maḥaalib*/ earthenware crock (see Pl.A, 3).

محلبيّة *maḥlabiyya* /n/ oil of mahaleb (used in cosmetics).

اتحلب *ʔitḥalab* /vi/ to be milked. - iva *mitḥilib*.

استحلب *ʔistaḥlib* /vt/ to suck (e.g., pastilles). - vn *ʔistiḥlaab*; ava *mistaḥlib*; pva *mustaḥlab*.

مستحلب *mustaḥlab* /n pl *-aat*/ *[chem]* emulsion.

ح ل ب [2]

حلبة *ḥalba* /n pl *ḥalbaat*/ ring, arena. *ḥalbit mulakma* boxing ring. *ḥalbit raɋṣ* dance floor.

حلبة *ḥilba* /n/ **1** fenugreek. **2** an infusion of fenugreek.

ح ل ب س

حلبسّة *ḥalabissa* (also *ʃuʏl il-ḥalabissa*) /n/ rascally and devious behaviour, hanky-panky.

ح ل ج

حلج *ḥalag (i)* /vt/ to gin (cotton). *wabuur ḥaliig* ginning mill. - vn *ḥalg, ḥilaaga, ḥaliig*; ava *ḥaalig*; pva *maḥluug*.

حلاجة *ḥilaaga* /n/ cotton-ginner's trade.

حليج *ḥaliig* /n/ ginned cotton.

محلج *maḥlag* /n pl *maḥaalig*/ ginning mill.

اتحلج *ʔitḥalag* /vi/ to be ginned. - iva *mitḥilig*.

انحلج *ʔinḥalag* = *ʔitḥalag*. - iva *minḥilig*.

ح ل ح
حلحل *ħalħil* /vt/ to budge. *saʕteen ʕala ma ħalħiluu min maṭraħ-u* (it took) two hours for them to move it from its place. - vn *ħalħala*; ava/pva *miħalħal*.
اتحلحل *ʔitħalħil* /vi/ to be budged. - iva *mitħalħal*.

ح ل ز ن
حلزون *ħalazoon* /n/ spiral.
حلزونة *ħalazoona* /n pl *-aat*/ **1a** *[obsol]* horse-drawn tram or bus. ‖*bitaaʕit il-ħalazoona* a whore. **1b** *[rur, obsol]* bus. **2a** Archimedes' screw (see Pl.E, 15). **2b** metal scoop wheel (see Pl.E, 22).
حلزوني *ħalazooni* /adj/ spiral, helical. *tirs' ħalazooni* worm gear. *sillim ħalazooni* a spiral staircase.

ح ل س
حلس *ħils* /n pl *ʔiħlaas, ħilaas*/ *[rur]* saddle blanket of a camel.

[1] ح ل ف
حلف *ħilif, ħalaf (i)* /vi/ to swear an oath, gives one's pledge. *ħilifna niqrab-ak law futt' min hina* we have sworn to beat you if you pass this way. *ħilfit la-tfarraq ʕeef lis-sayyida ħalaawit nagaat-u* she made a vow to distribute bread (to the poor) for the sake of Sayyida Zaynab to celebrate his rescue. *ħ-addii-lak ʕalqa tiħlif biiha ṭuul ʕumr-ak* I'll give you a beating to swear by for the rest of your life! ‖ *ʔin-naas bi-tiħlif bi-ħayaat-u* ≈ people have nothing but good to say about him. - *ʕaalu lil-ħaraami ʔiħlif - ʕaal gaa-lak il-farag [prov]* ≈ a thief's honour is of little worth. - vn *ħilfaan*; ava *ħaalif*. ¶ *ħilif ʕala* (1) to bind someone by an oath, be insistent (that s.o. do s.th.). *ħilif ʕala mraat-u ma tuxrug* he swore that his wife should not go out. *ħilif ʕalayya l-atʕadda maʕaa* he insisted I must have lunch with him. (2) to forswear. *ħilif ʕala l-ħaʃiiʃ* he swore off hashish.
حلفان *ħilfaan* /n pl *-aat*/ oath.
حلف *ħilf* /n pl *ʔaħlaaf*↑/ pact, alliance, treaty. *ʔil-ħilf il-ʔaṭlasi* the North Atlantic Treaty Organization.
محالفة *muħalfa* /n pl *-aat*/ pact, alliance, treaty.
حلّف *ħallif* /vt/ **1** to adjure, cause to take an oath. *ħallifuu-ni b-ʔinni m-atgawwiz-ʃ' l-ʕaayit ma ʔatimm' talaata w-ʕifriin sana* they made me swear I would not marry until I was twenty-three. **2** to finish off completely, use up utterly. *kifaaya daʕk' fil-ħalla - ʔinti ħa-tħallifii-ha* that's enough scrubbing at the pan - are you trying to scour it all away! - vn *taħliif*; ava *miħallif*.
اتحلّف *ʔitħallif* /vi/ **1** to be adjured. **2** to resolve to inflict suffering. - ava/iva *mitħallif*.
اتحالف *ʔitħaalif* /vi/ to make an alliance. *ʔitħalfu maʕa baʕḍ' ḍidd il-ʕaduw* they made an alliance against the enemy. - vn *taħaaluf*; ava *mitħaalif*.
استحلف *ʔistaħlif* **1** /vi/ to resolve to inflict suffering (on s.o.) *da mistaħlif-li* he's out to get me, he has it in for me. **2**↑ /vt/ to adjure *ʔastaħlif-ak bi-bn-ak tisaʕid-ni* by (the love you bear) your son, I plead with you to help me. - vn *ʔistiħlaaf*; ava *mistaħlif*.
استحلّف *ʔistaħallif* = *ʔistaħlif*. - ava *mistaħallif*.

[2] ح ل ف
حلفاء، حلفة *ħalfa* /n/ *[bot]* alfa esparto, halfa grass. ‖*xud bi-ħaqq-ak ħalfa wi-ħraq-u [prov]* (exercise your full rights, even if you're only entitled to *ħalfa* which you will then burn) don't give up anything you have a right to even if it is completely worthless.
حلفاية *ħalfaaya* /unit n, pl *-aat*/ a blade of halfa grass.

[3] ح ل ف see ح ل ل و ف: *ħalluuf, ħalluufa*

[1] ح ل ق
حلق *ħalaq'* *(a)* **1** /vt/ **1a** to shave (beard, head), cut (hair). *ʔiħlaq-li daqn' w-faʕr* give me a shave and haircut. *ħalaquu-li raas-i* they shaved my head. *maʕguun ħilaaqa* shaving cream. *makanit ħilaaqa* razor. ‖*muluxiyya maħluuqa* coarse-chopped *muluxiyya*. **1b** to strip (a screw thread). **2** /vi/ **2a** to have a shave or haircut. **2b** to strip, be stripped (of a screw thread). - vn *ħalq, ħilaaqa*; ava *ħaaliq*; pva *maħluuq*.
حلقة *ħalqa* /inst n, pl *-aat*/ a shave, a haircut. ‖*ħalqa ngiliizi* a crewcut.
حليق *ħaliiq*↑ /adj/ shaven. *ħaliiq id-daqn* clean-shaven. *raagil ħaliiq id-daqn* a clean-shaven man.
حلاّق *ħallaaq* /n */ barber, men's hairdresser. *ħallaaq iṣ-ṣiħħa [rur, obsol]* barber-surgeon.
اتحلق *ʔitħalaq* /vi/ **1** to be barbered, be shaved. **2** to be stripped (of a screwthread). - iva *mitħiliq*.

[2] ح ل ق
حلق *ħalq* /n pl *ħuluuq, ħulúqa*/ **1** throat. **2** frame (of a door, window etc.). **3** neck (of, e.g., a bottle).
حلق *ħalaq*[2] /n/ **1** /coll/ ring(s), circle(s). *ħalaq sataayir* curtain rings. **2** /pl *ħilqaan, ħulqaan*/ pair of earrings. *fardit ħalaq* an earring. ‖*yiddi l-ħalaq li-lli bala wdaan [prov]* (He gives earrings to those who have no ears) ≈ the best goes to those least equipped to appreciate it.
حلقة *ħalaqa* /n pl *-aat, ħalqaat, ħulqaan*/ **1** /unit n/ a ring, a circle. *ħalaqit mafatiiħ* key ring. *qaʕʕad-na ħalaqa ʕal-ħaṣiira* he sat us in a circle on the mat. ‖*ħalaqit mulakma* boxing ring. - *ħalaqit ẓikr* a Sufi

gathering for chanting the name of God. **2** section in a market devoted to selling a particular commodity. *ħalaqit il-xuḍaar* market area where vegetables are sold. **3** episode (in, e.g., a television or radio serial). ‖ *ʕala ħalqaat* (1) in instalments, bit by bit. (2) from time to time, as in *bi-yṣuumu ʕala ħalqaat [joc]* they fast sporadically.

حلقي *ħalaqi* /adj/ ring-shaped, circular.

حلقيّة *ħalaqiyya* /n/ surrounding circle. *ḍarabu ħalaqiyya ħawalee* they encircled him.

حلّق *ħallaq* /vi/ **1** to move about so as to block routes of escape. *ħallaq ħuuf* cut him off and catch him! (cry after a thief or escaped animal). *ħallaqu ʕalayya w-ḍarabuu-ni* they cornered me and beat me. *ħallaq ʕalayya fik-kalaam* he tried to stop me making my point. **2**↑ to circle in the air. - vn *taħliiq*; ava *miħallaq*.

اتحلّق *ʔitħallaq* /vi/ **1** to set in a ring-shape. **2** impersonal passive of *ħallaq* 1. *ʔitħallaq ʕalayya* I was cornered. - ava/iva *mitħallaq*.

ح ل ق م

حلقوم *ħalquum* /n pl *ħalaqiim*/ throat, gullet.

ح ل ل ١

حلّ *ħall[1] (i)* /vt/ **1** to undo, untie. *bi-yħill iṣ-ṣamuula* he unscrews the nut. *ħall il-ʕuqda* he untied the knot. ‖ *yiħill[i] w-yurbuṭ* to exercise effective power, get things done (usually in negative contexts), as in *la yħill[i] wala yurbuṭ* he's ineffective. - *miʃi ʕala ħall[i] faʕr-u* to do as one likes with no regard for convention. - *ħill-i-ni lamma ...* ≈ it's bound to take a long time for ..., as in *ħill-i-ni lamma yirgaʕ* ≈ it will be ages before he comes back. **2** to solve. *muʃkila ma-yħill[i]-haa-ʃ ʔilla rabb-i-na* a problem only our Lord can solve, a very tough problem. **3** to dissolve. *ħall[i] ʃwayyit ʕambar fil-qahwa* he dissolved a little ambergris in the coffee. **4** to disperse, break up. *ħallu g-gamʕiyya* they dissolved the association. **5** *[Chr]* **5a** to absolve of sin. *ħill-i-ni ya-buu-na* give me absolution, Father. *rabb-i-na yħill-ak* God grant you remission of your sins. **5b** to grant sanction to (s.o., of a priest). — /vi/ **6** to dissolve. *ʔis-sukkar ħall[i] fil-mayya* the sugar dissolved in the water. ‖ *ʔil-alwaan ħallit* the colour ran. **7** to become loose, come undone. *ʔiṣ-ṣawamiil ħallit maʕa surʕit il-mutoor* the bolts worked loose with the speed of the motor. ‖ *ʔaʕṣaab-i ħallit* my nerves are in shreds. - *ħill[a] ʕanni* leave me alone! **8** to come into or upon (s.o. or s.th.). *ħallit ir-rooħ fi-gasad-u* he revived. *ħuluul ir-rooħ il-qudus [Chr]* (1) the descent of the Holy Spirit. (2) epiclesis. *ʔil-maṣaayib illi ħallit ʕaleena* the disasters that befell us. - vn *ħalalaan, ħuluul, ħall*; ava *ħaalil*; pva *maħluul*. ¶ *ħall[i] maħall* (or *makaan-*) to take the place of. *miin ħa-yħill[i] makaan-ak lamma tkuun fi-ʔagaaza* who'll take your place when you're on holiday?

حلّ *ħall[2]* /n pl *-ħuluul*/ solution. *muʃkila ma-lhaa-ʃ ħall* an insoluble problem.

محلول *maħluul* **1** /n pl *-aat, maħaliil/ [chem]* solution. **2** /adj */ sexually impotent.

حلّة *ħalla[1]* /n pl *-aat* **1** instance noun of *ħall*. **2** = *ħall[2]*. — /pl *ħilal*/ **3** metal cooking-pot. ‖ *ħallit furn* or *ħallit keek* cooking-pot constructed to produce results comparable with those of oven cookery. - *ħalla ʔumm[a] ṣuffaara*↓ or *ħalla bristu* or *ħallit buxaar* pressure cooker. - *ʔil-ħikaaya di ħalla w-huwwa maʏrafit-ha* ≈ he knows everything about his matter. - *ħalla w-laqeet ʏaṭaa-ha* I found just what I was looking for. - *ħallit l-ittifaaq* food eaten by a couple on their wedding-night.

حلّ *ħill* /n/ *[Chr]* **1** (declaration of) absolution. *laazim taaxud ħill[i] qabl it-tanaawul* you must receive absolution before communion. **2** sanction, privilege. *ʔil-qassiis bi-yiddi ħill[i] lil-ʕayyaan ʕaʃaan ma-yṣum-ʃ* the priest gives a sick man permission not to fast. *xadt[i] ħill[a] ʕaʃaan ʔadbaħ* I obtained (from a priest) permission to slaughter (animals for food).

¶ *fi-ħill* free to act, having a free hand. *ʔana miʃ fi-ħill inni ʔaqul-lak* I am not at liberty to tell you.

حلّة *ħilla* /n/ metal conduit leading from a water-wheel to a ditch.

حلال *ħalaal* /n/ what is allowed by the precepts of Islam. ‖ *ʔibn* (or *bint[a]*) *ħalaal* nice person, decent sort, as in *wilaad il-ħalaal ʔilli faafu d-duxxaan ballaʏu l-maṭaafi* the good folk who saw the smoke called the fire-brigade. - *ʔibn* (or *bint) il-ħalaal* ≈ Mr (or Miss) Right, as in *miʃ ħ-atgawwiz ʔilla lamma ʔalaaqi bint il-ħalaal* I shan't marry till I find Miss Right. - *filuus ħalaal* honestly-gotten gains (which are always expected to be fruitful), as in *ʔilli fluus-u ħalaal yiftiri minni [vendor's cry]* ≈ you'll never go wrong if you buy from me! - *ħalaal-i balaal-i* or *ħalaal-i zalaal-i* it is my own to enjoy. - /adjectivally/ *ʔil-filuus il-ħalaal ma-tḍiʕ-ʃ* honestly-earned money will never be lost.

حليلة *ħileela*↓*: ya ħleela [women]* /interj/ how nice! how wonderful!

حلاّل *ħallaal* /n */ solver (of problems), untier (of knots). *ħallaal maʃaakil* or *ħallaal ʕuqad* a solver of problems, one who gets things put right. *kull[i] ʕuqda w-liiha ħallaal* ≈ there's always someone who can sort things out (no matter how complicated a situation may be).

محلّ *maħall* /n pl *-aat*/ **1** shop, store, place of business.

maḥall alf' ṣanf emporium. *maḥall' ngaara* carpenter's shop. *ʕil-maḥallaat ɋafla g-gumʕa* the shops are closed on Fridays. **2** place. *ʕuɋʕud maḥall-ak* sit where you are. *bi-yustaʕmal maḥall-u* it is used in its place. ‖*kalaam-ak fi-maḥall-u* ≈ how right you are! -*fi-ɤeer maḥall-(u)* inappropriately, unnecessarily, as in *wala ṣaraft' ɋirf' f-ɤeer maḥall-u* I haven't wasted a single piastre. **3** (also *maḥall il-ʕadab*) *[euphem]* lavatory, w.c.

محلّي *maḥalli* /adj/ local, locally-made. *ʕil-istihlaak il-maḥalli* local consumption.

انحلّ *ʕinḥall* = *ʕitḥall*. -ava/iva *minḥall*.

حلّل *ḥallil* /vt/ **1** to analyse. *ḥallilu l-ʕayyina fil-maʕmal* they analysed the sample in the lab. **2** *[Isl]* **2a** to declare to be *ḥalaal* (q.v.). **2b** to slaughter (an animal at the point of death) so as to make the eating of its flesh ritually permissible. -vn *taḥliil*; ava *miḥallil*.

تحليل *taḥliil* /n/ **1** /pl -*aat*, *taḥaliil*/ analysis. **2** /pl *taḥaliil* only/ *[Chr]* absolution.

محلّل *muḥallil* /n */ *[Isl law, obsol]* intermediate husband employed to enable a man to remarry a woman he has divorced with the threefold repudiation.

اتحلّل *ʕitḥallil* /vi/ passive of *ḥallil*. -vn *taḥallul*; iva *mitḥallil*.

احتلّ *ʕiḥtall* /vt/ to occupy (territory) by force. -vn *ʕiḥtilaal*; ava *miḥtall*; pva *muḥtall*.

احتلال *ʕiḥtilaal* /n/ military occupation (of an area).

محتلّ *muḥtall* /n */ occupier, invader.

استحلّ *ʕistaḥall* /vt/ to consider *ḥalaal* (q.v.), consider fair game. *yistaḥall' maal in-nabi* he would swindle the Prophet himself. -ava *mistiḥill*.

ح ل ل [2]

حلل *ḥalal* /n pl *ʕiḥlaal*/ penis.

إحليل *ʕiḥliil* /n pl *ʕiḥlaal*, *ʕaḥaliil*/ penis.

ح ل ل و ف

حلّوف *ḥalluuf* /n pl *ḥalaliif*/ **1** boar, pig. **2** *[fig]* fat, dirty or base person.

حلّوفة *ḥalluufa* /n pl -*aat*/ **1** sow. **2** *[rur]* any of various types of metal scoop wheel used in irrigation (see Pl.E, 22).

ح ل م [1]

حلم *ḥilim'* *(a)* /vi/ to dream. *ṭuul ʕumr-i b-aḥlam bi-kida* all my life I've dreamed of that. -vn *ḥilm*; ava *ḥaalim*, *ḥalmaan*.

حلم *ḥilm'* /n pl *ʕaḥlaam*/ dream. *tafsiir il-ʕaḥlaam* interpretation of dreams. *ḥilm ibliis fig-ganna [prov]* (Satan's dream of Paradise) a total impossibility. *ḥilm' w-itfassar* a dream come true.

استحلم *ʕistaḥlim* /vi/ to have wet dreams. -vn *ʕistiḥlaam*; ava *mistaḥlim*.

ح ل م [2]

حلم *ḥilim²* *(a)* /vi/ to behave with patience and restraint. *laazim tiḥlam ʕala wlaad-ak* you should go easy with your children. -vn *ḥilm*; ava *ḥaalim*, *ḥalmaan*.

حلم *ḥilm²* /n/ tolerance. *ʕil-ḥilm' sayyid il-ʕaxlaaɋ [prov]* tolerance is the chief of virtues. *ḥilm-ak ʕalayya* be patient with me! *ḥilm-ak ʃiwayya* take it easy! don't get het up!

حليم *ḥaliim* **1** /adj pl *ḥulama*/ tolerant, good-natured. **2** /n/ Patient One (i.e. with sinners) (epithet of God).

ح ل م [3]

حلمة *ḥalama* /n pl -*aat*/ nipple, teat. ‖*ḥalamıt widn* earlobe. -*lamma tʃuuf ḥalamıt widn-ak* (when you see your earlobe) ≈ when hell freezes over.

ح ل ن ج

حلنجي *ḥalangi* /n pl -*yya*/ swindler.

ح ل و م

حلوم *ḥaluum* <Copt> /n/ mild white cured cheese, sometimes braided.

ح ل و

حلى *ḥili* *(a)* /vi/ **1** to be or become attractive, pleasant or enjoyable, gain favour. *baʕd' maʃna xadt if-faɋɋa ḥilyit taanı f-ʕeen-u* after I had taken the flat he started to feel it was attractive again. *yiigi ṣeṣeef wil-ɋaʕda barra tiḥla* summer comes and sitting in the open becomes pleasant. **2** to become sweet. *ʕif-faay ḥili zyaada ʕan il-luzuum* the tea became over-sweet. -vn *ḥala*, *ḥalaawa*, *ḥiliww*; ava *ḥaali*.

حلى *ḥala'* *(ı)* /vt/ **1** to sweeten. *ma-tiḥlii-ʃ if-faay fil-barraad* don't sweeten the tea in the teapot. **2** to cheer, brighten up. *ga ḥala l-ɋaʕda* he came and cheered up the gathering. -vn *ḥalayaan*; ava *ḥaali*; pva *maḥli*.

حلا *ḥala²* /n/ sweetness. *ʕis-sukkar il-mikarrar ḥalaa ʕaɋall* refined sugar is less sweet.

حلاوة *ḥalaawa* /n/ **1** pleasurableness, pleasantness, sweetness. *ya ḥalaawa* how nice! *ya ḥalawit-ha* how sweet she is! *ma-fii-ʃ ḥalaawa min ɤeer naar* and *ʕilli yaakul min ḥalawit-ha yitḥammil mararit-ha [prov]* ≈

there's no pleasure without pain. ‖*ħalawt-ak* well done! -*ħalaawit (ir-)rooḥ* (final) burst of energy born of a zest for life, final fling, as in *ʕil-xinaaqa l-ʕaxiira di bass[a] ħalaawit rooḥ* the last quarrel is just a final attempt to put up a fight, *ʕil-baṭṭa l-madbuuḥa b-tifqal timʃi wi-tfaṭfaṭ min ħalaawit ir-rooḥ* a duck that has its throat cut goes on walking and jumping about, so strong is the hold life has on it. **2** present or treat given in celebration. *ḥ-aʕaʃʃii-k barra ħalaawit nagaaḥ-i* I'll take you out to dinner to celebrate passing my exams. *ma-tinsu-naa-ʃ fil-ħalaawa* don't overlook us when you're treating everyone. **3** any of a variety of sweetmeats or candies. *ħalaawa ṭḥiniyya* halwah. *ħalaawa fuliyya* hard white candy encrusted with peanuts. *ħalaawa ʕalaf* sesame seeds pressed together with caramel. ‖*ħalaawit is-sayyid* sweetmeats and candies made in Tanta for the *muulid* of the saint el-Sayyid el-Badawi. -*ʕaruusa ħalaawa* sugar doll of the sort sold at the *muulid* of any saint. -*kal ʕaʔl-(u) b-ħalaawa* to dupe (s.o.). -*bi-yitbaaʕ zayy il-ħalaawa* ≈ it sells like hot cakes. **4** depilatory paste made from sugar, water and lemon juice.

حلو *ḥilw* **1** /adj */ **1a** sweet (to taste). ‖*zeet ḥilw* common cooking oil. -*mayya ḥilwa* fresh water. **1b** nice, good. *ḥilwa kida* is that O.K.? *kalaam-u ḥilw* he speaks well. *waḍḍabt il-baṭaaṭis wil-makaroona w-xallet-hum mil-ḥilwiin* I prepared the potatoes and pasta and made them really nice. *wabbaxt-u b-kaam kilma ḥilwiin ʕal-haamiʃ* I rebuked him with a few well-chosen words in passing. /adverbially/ *ʕiɣsil-u ḥilw* wash it well! ‖*nifs-u ḥilwa* he's easy to please. -*ʕil-ḥilw[i] ma-yikmal-ʃ [prov]* nothing can be perfect. -**1c** good-looking. *ʃakl-a-ha ḥilw* she looks pretty. ‖*wiʃʃ(-u) ḥilw[u] ʕala ...* ≈ (he) brings good luck to ..., as in *wiʃʃ il-bint iṣ-ṣuɣayyara ga ḥilw[u] ʕala ʕabuu-ha* the newborn girl brought her father good luck. **2** /n/ sweet course (of a meal).

حلية *ḥilya* /n pl -*aat*/ decoration, ornament, embellishment.

حلوان *ḥilwaan[1]* /n/ **1** remuneration for services rendered. **2** ransom, redemptive price. see further under ح ل و ن

حلوانة *ḥilwaana: ḥilwaana f-silwaana* see *silwaana*.

حلويّات *ḥalawiyyaat* /pl n/ **1** confections, sweetmeats, fancy pastries. **2** neck sweetbreads.

حلوانى *ḥalawaani* /n pl -*yya*/ confectioner, maker and seller of sweetmeats and fancy pastries.

أحلى *ʔaḥla* /el/ more/most sweet, lovely, pleasant etc. *(ya) m-aḥla* how lovely, as in *(ya) m-aḥlaa-ha* how lovely she is! *ya m-aḥla l-biira f-ʕizz il-ḥarr* how lovely to drink beer when the weather's really hot!

حليوة *ḥileewa* /adj invar/ goodlooking. *waad ḥileewa* a handsome lad.

حلّى *ḥalla[2]* /vt/ **1a** to sweeten. *ḥalli z-zabaadi b-fiwayyit ʕasal* sweeten the yoghurt with a little honey. *ʔiddii-ni ḥittit baqlaawa ʔaḥalli biiha buqq-i* give me a piece of baklava to sweeten my mouth. ‖*ḥalli buqq-ak bi-ṣalaat in-nabi* sweeten your mouth with the words 'Blessings on the Prophet!' **1b** to make pleasant. *ḥalla l-qaʕda* he brightened up the gathering. **2** to eat (s.th.) as a dessert. *baʕd[i] ma nitɣadda ʕayziin niḥalli baṭṭiix* after we've eaten we would like water-melon for dessert. **3** to decorate, ornament. *ḥallit il-fustaan bi-dantilla* she decorated the dress with lace. -vn *taḥliyya*; ava *miḥalli*.

اتحلّى *ʔitḥalla* /vi/ passive of *ḥalla*. -iva *miṭḥalli*.

احلوّ *ʔiḥlaww* /vi/ **1** to be or become sweet (to the taste). *ṭaʕm-u miḥliww* it tastes sweetish. **2** to become pretty. *ʔil-ḥibla lamma tiḥlaww[i] yibqa lli f-baṭn-a-ha bint* when a pregnant woman gets prettier it means she's carrying a girl. **3** to become enjoyable, become pleasant. *ʔid-dinya ḥlawwit fi-ʕeen-i* I started to enjoy life. -ava *miḥliww*.

احلىّ *ʔiḥlayy* = *ʔiḥlaww*. -ava *miḥlayy*.

استحلى *ʔistaḥla* /vt/ to consider pleasant, find enjoyable. *ʔistaḥleet il-film* I enjoyed the film. -ava *mistaḥli*.

ح ل و ا ن

حلوان *ḥilwaan[2]* /prop n/ Helwan, a residential and industrial town to the south of Cairo.

حلوانى *ḥilwaani* /adj */ from Helwan. *ʔig-giir il-ḥilwaani* Helwan limestone.

ح ل و ن see also ح ل و

حلون *ḥalwin* **1** /vt/ to sweeten (the mouth, of food). *ḥaaga tḥalwin il-buqq* something to sweeten your mouth. **2** /vi/ to eat or taste something sweet. ‖*ʔana mḥalwin* I fancy eating something sweet. -vn *ḥalwana*; ava/pva *miḥalwin*.

¶ *ḥalwin ʕala* to pay for the return of, redeem, ransom. *ḥalwin ʕal-baqara lamma rigʕit* he paid for the return of the (stolen) cow.

ح ل ى see ح ل و

ح ل ى ط

حليط *ḥalyaṭ* /vi/ to toady, make up (to s.o.). -vn *ḥalyaṭa*.

حلياط *ḥilyaaṭ* /n */ toady.

ح م

حم *ḥama[1]* /n, in constr *ḥamaa-*/ father-in-law.

حماة، حمة *ḥama²* /n, in constr *ḥamaat-*, pl *ḥamawaat*/ mother-in-law. *ʕil-ḥama ɛama [prov]* a mother-in-law is (as hard to bear as) blindness. *ḥamaat-i mnaqra qaal ṭallaq bint-a-ha [prov]* (he said) 'My mother-in-law's a plague!' Someone told him, 'Divorce her daughter!' (of one who complains of a situation whose solution is in his own hands). ‖ *ḥamaat-ak bi-ṯḥibb-ak* you've come at the right time (to one who arrives when food is being served).

ح م ب ط see ح ن ب ط: *ḥambuuṭ, ḥambaṭ*

ح م ح ر
حمحر *ḥamḥar* /vi/ to set one's sights (on s.th.). *bi-yḥamḥar ɛak-kitaab da* he is out to get that book by any means. - vn *ḥamḥara*; ava *miḥamḥar*.

ح م ح م
حمحم *ḥamḥam* /vi/ **1** to flutter the wings (especially of a pigeon). **2a** to puff itself up, prance, strut etc., prior to mating (of animals and birds). **2b** to become sexually aroused. - vn *ḥamḥama*; ava *miḥamḥam*.
¶ *ḥamḥam ɛala* to give protective care to (s.o.). *ḥamḥam ɛala l-ɛiyaal wi-ʃaaf maṣaliḥ-hum* he cared for the children and looked after their interests.

ح م د
حمد *ḥamad (i)* /vi/ to praise, give thanks to (God). *ɛala l-ɛumuum il-waaḥid yiḥmid rabb-i-na* ≈ anyway, one isn't too badly off. ‖ *ʕiḥmid rabb-i-na* ≈ count your blessings! - vn *ḥamd*; ava *ḥaamid*; pva *maḥmuud*.
حمد *ḥamd* /n/ praise. *ʕil-ḥamdu li-llaah* praise be to God! (used (1) in reply to any enquiry after one's well-being. (2) as a grace after eating. (3) as an expression of relief or satisfaction). *ḥamd illa ɛas-salaama* praise be to God for (your) safety! (said (1) to one arriving at the end of a journey. (2) to one who has just recovered from an illness. (3) to a woman who has just given birth).
أحمد *ʔaḥmad* /prop n/ male given name. ‖ *ʔabu ʔaḥmad* ≈ big shot.
أحمدات *ʔaḥmadaat: ʔabu ʔaḥmadaat [obsol]* green tarbush with a white tassel, formerly worn by the Alexandrian *miɛallim*, hence such expressions as *laabis ʔabu ʔaḥmadaat* dressed like an Alexandrian, *miɛallim ɛamil-li ʔabu ʔaḥmadaat* trying to lord it over me (in the manner attributed to Alexandrian *miɛallimiin*).
أحمدى *ʔaḥmadi: ʕil-busaaṭ ʔaḥmadi* welcome! there's room for everyone and anyone. *xalli l-busaaṭ ʔaḥmadi* let's keep things friendly!
حميد *ḥamiid* /n/ Praiseworthy One (epithet of God).
حميدى *ḥamiidi* /adj/ *[path]* benign. *waram ḥamiidi* a benign tumour.

ح م ر ¹
أحمر *ʔaḥmar¹* /adj, fem *ḥamra*, pl *ḥumr*/ red, reddish-brown. ‖ *ʔaḥmar ʕingiliizi* fire-engine red. - *ʔaḥmar ʃafaayif* lipstick. - *ḥuṣaan ʔaḥmar* a bay horse. - *ṭuub ʔaḥmar* fired bricks. - *laḥma ḥamra* lean meat. - *naḥaas ʔaḥmar* copper. - *ʔabu kaɛb aḥmar* a baby. - *ʕig-ginn il-ʔaḥmar* the most powerful of the jinn. - *wala g-ginn il-ʔaḥmar yiqdar yigiib-u* ≈ nothing on earth could make him come, it is impossible to make him come. - *warra(a) l-ɛeen il-ḥamra* to be intimidatingly severe (toward s.o.), as in *ʕis-sikirteera tɛawwidit ɛala qillit il-ʔadab bass il-mudiir ig-gidiid warraa-ha l-ɛeen il-ḥamra* the secretary had habitually been very rude, but the new director let her know what he thought of that!
أحمرانى *ʔaḥmaraani* /adj/ reddish.
حمرة *ḥumra* /n/ **1** *[path]* erysipelas, St. Anthony's fire. **2** /coll/ broken bricks.
حمار *ḥamaar* /n/ redness, reddish-browness, ruddiness. ‖ *ḥamaar wi-ḥalaawa ya baṭṭiix* water-melon vendor's cry ≈ it looks good and tastes good!
محمور *maḥmuur* /adj/ afflicted with laminitis (of a horse).
حمّر *ḥammar* /vt/ **1** *[cook]* to fry (particularly in *samn*). *baṭaaṭis miḥammara* potato chips, French fries. **2** to make red. *bi-yḥammar il-ɛeen* it makes the eye inflamed. ‖ *ḥammar-lu qafaa* give him a slapping on the back of the neck! - *ḥammar-lu ɛeen-ak* be very strict with him, show him you won't put up with any nonsense! - vn *taḥmiir*; ava/pva *miḥammar*.
اتحمّر *ʔitḥammar* /vi/ *[cook]* to be fried (particularly in *samn*). - iva *mitḥammar*.
احمرّ *ʔiḥmarr* /vi/ to burn red, turn reddish-brown. *ʔil-fustaan iḥmarr¹ mis-sabɣa* the dress turned red from the dye. *ʔil-balaḥ iḥmarr* the dates (ripened and) turned red. *wiff-i ḥmarr* I blushed. *ʔiḥmarreet qawi fi-skindiriyya* you got very sunburned in Alexandria. - vn *ʔiḥmiraar*; ava *miḥmirr*.
استحمر *ʔistaḥmar¹* /vt/ **1** to consider red. **2** to select for redness. - ava *mistaḥmar*.

ح م ر ²
حمار *ḥumaar* /n pl *ḥimiir*/ **1** male donkey, jackass. ‖ *xallaa-ha baṭn¹ ḥmaar [prov]* ≈ he added insult to injury. - *ʕeef ɛarraf il-ḥimiir bi-ʔakl ig-ganzabiil [prov]* (what taught donkeys to eat ginger?) ≈ what's the point

of throwing pearls before swine? - *muut ya ḥmaar ɛala ma ygii-lak il-ɛaliiq [prov]* (you will be a dead donkey before the fodder comes) you have a long wait ahead of you. - *sikitnaa-lu daxal bi-ḥmaar-u* ≈ we gave him an inch and he took a mile. - *ḥumaar waḥfi* or *ḥumaar mixaṭṭaṭ* zebra. - *ḥumaar fuxl* grind, swot. - *xulub* (or *xilib*) *ḥumaar-i* I give up, I'm stumped. **2** fool, dolt. **3** any of a variety of supporting devices (e.g., trestle, jack).

حمارة *ḥumaara* /n pl *ḥimiir*/ female donkey. ‖ *ḥumart-ak il-ɛarga wala suʃaal il-laʃiim [prov]* better make do with your lame donkey than go to the wicked for help.

أحمر *ʔaḥmar*[2] /el/ more/most stupid.

حمّار *ḥammaar* **1** /n * and pl *ḥammaara*/ *[obsol]* donkey driver. **2** /adj */ mannerless, vulgar.

حمّاري *ḥammaari: rikib ḥammaari* to ride astride.

حميري *ḥimmiiri, ḥimmeeri, ḥummeeri: rikib ḥimmiiri* (etc.) to ride astride.

استحمر *ʔistaḥmar*[2] **1** /vt/ to consider stupid. **2** /vi/ to behave stupidly. - ava/pva *mistaḥmar*.

ح م ر ق

حمرق *ḥamraq* /vi/ to be difficult, be unco-operative, be evasive, stall. - vn *ḥamraqa*; ava *miḥamraq*.

اتحمرق *ʔitḥamraq* = *ḥamraq*. - ava *mitḥamraq*.

استحمرق *ʔistiḥamraq*↓ = *ḥamraq*. - ava *mistiḥamraq*.

ح م س

حماس *ḥamaas* /n/ enthusiasm, fervour, zeal.

حماسة *ḥamaasa* = *ḥamaas*. *balaaf ḥamaasa* don't be so rash!

حمّس *ḥammis* /vt/ to inspire with enthusiasm. - vn *taḥmiis*; ava *miḥammis*.

اتحمّس *ʔitḥammis* /vi/ to become enthusiastic. - vn *taḥammus*; ava *mitḥammis, mutaḥammis*.

ح م ش

حمش *ḥamaʃ (i)* /vt/ to scorch, burn. - vn *ḥamʃ*; ava *ḥaamiʃ*; pva *maḥmuuʃ*.

حمشة *ḥamʃa* /inst n, pl *-aat*/ a scorching.

حمش *ḥimiʃ* /adj */ **1** tough-minded, virile. *goz-ha ḥimiʃ mimaʃʃii-ha ɛal-ɛagiin ma-tlaxbaṭ-uu-ʃ* her husband is a real man; he really makes her behave herself. **2** crisply roasted. *ḥimiʃ wi-laziiz ya maqli [vendor's cry]* crisp roasted peanuts!

اتحمش *ʔitḥamaʃ* /vi/ to be scorched, be burnt. - iva *mitḥimiʃ*.

انحمش *ʔinḥamaʃ* = *ʔitḥamaʃ*. - iva *minḥimiʃ*.

ح م ص

حمص *ḥummuṣ* /coll n/ chick-pea(s). *salaṭit ḥummuṣ* a dip of ground chick-pea, sesame seed, garlic and lemon. *ḥummuṣ iʃ-ʃaam* hot, spicy drink made with whole chick-peas. ‖ *ṭiliɛ mil-muulid bala ḥummuṣ [prov]* he left the fair without any chick-peas (of one who gets nothing out of an affair from which he might expect to profit).

حمّصة *ḥummuṣa* /n pl *-aat*/ **1** /unit n/ a chick-pea. ‖ *ɛamal ḥummuṣa* to apply a chick-pea to a boil or the like to draw out the pus. **2** cloaca (of a chicken). **3** *[rur]* pond in a field (for drainage).

حمّصيّة *ḥummuṣiyya* (also *ḥalaawa ḥummuṣiyya*) /n/ hard white candy studded with dried chick-peas.

حمّصاني *ḥummuṣaani: zaraayir ḥummuṣaani* buttons made of knotted thread.

محمص *maḥmaṣ* /n pl *-aat, maḥaamiṣ*/ oven for roasting coffee beans, peanuts and seeds.

محمصة *maḥmaṣa* = *maḥmaṣ*.

حمّص *ḥammaṣ* /vt/ **1** to parch (seeds or grain). *bi-nḥammaṣ id-dura qabl*[i] *ma nixzin-ha* we parch the maize before storing it. *bi-yḥammaṣ is-sudaani* he roasts the peanuts. ‖ *ɛeef miḥammaṣ* crisp dried bread. **2** *[phys]* to superheat. - vn *taḥmiiṣ*; ava/pva *miḥammaṣ*.

اتحمّص *ʔitḥammaṣ* /vi/ **1** to be dried by heat (of food). **2** to become crisp or brittle. *ʔik-kawitʃ*[i] *qidim wi-tḥammaṣ* the rubber got old and brittle. **3** *[phys]* to be superheated. - iva *mitḥammaṣ*.

ح م ض

حمض *ḥimiḍ* or *ḥumuḍ (a)* /vi/ to go bad (of cooked food or fruit), go sour (of milk). - vn *ḥamaḍaan*; ava *ḥaamiḍ, ḥamḍaan*.

حامض *ḥaamiḍ* /n pl *ʔaḥmaaḍ, ḥawaamiḍ*/ acid.

حمض *ḥimḍ* = *ḥaamiḍ*.

حموضة *ḥumuuḍa* /n/ acidity (of the stomach).

حموضيّة *ḥumuḍiyya* /n/ spoilage (of food), sourness (of milk that has gone off).

حمّاض *ḥummaaḍ* /n/ *[bot]* sorrel.

حمّض *ḥammaḍ* /vt/ **1** *[phot]* to develop (film). **2** to cause (milk) to go sour or (food) to go bad. ‖ *maṯḥammaḍ-uu-ʃ [women in trad soc]* don't go too far! - vn *taḥmiiḍ*; ava/pva *miḥammaḍ*.

اتحمّض *ʔitḥammaḍ* /vi/ *[phot]* to be developed (of film). - iva *mitḥammaḍ*.

احمضّ *ʔiḥmaḍḍ* = *ḥimiḍ*. - ava *miḥmiḍḍ*.

ح م ق

حمقة *ḥamqa* /n/ (bad) temper, ill-humour, pique.

حمقان *ḥamqaan* /adj */ overwrought, in a state.
حمق *ḥumqˀ* /n/ foolishness, folly.
حمقى *ḥimaqi* /adj pl *-yya*/ quick to take offence, peevish, touchy.
أحمق *ʔaḥmaqˀ* /adj, fem *ḥamqa*, pl *ḥumq*/ foolish, silly.
محموق *maḥmuuq* /adj */ in a state, wrought up. *ʔawwil ma simiʕ il-xabar raaḥ maḥmuuq bil-ʕiyaaṭ* as soon as he heard the news he burst into tears.
اتحمق *ʔitḥamaq* /vi/ to become worked up, get into a state. *lamma ʏiliṭ itḥamaq ʕalayya* when he made a mistake, he lost his temper with me. - ava *miṭḥimiq*.
انحمق *ʔinḥamaq* = *ʔitḥamaq*. - ava *minḥimiq*.

ح م ل ˈ

حمل *ḥamalˈ (i)* /vt/ **1** to carry (especially a person). *ḥamalit ibn-a-ha w-miʃyit* she picked up her son and left. *ḥamal hamm* to be laden with care. *ḥamalit hamm-i* she bore my burdens, she concerned herself with my troubles. *ma-tiḥmil-fˈ hamm* don't worry! **2** to put up with, tolerate. *ma-yiḥmil-f aktar min kida* it can't take any more than that. — /vi/ **3** to become pregnant. *hiyya ḥamalit minnu* she became pregnant by him. - vn *ḥimlaan, ḥamalaan, ḥaml*; ava *ḥaamil*; pva *maḥmuul*. ¶ *ḥamal ʕala* to attack (particularly verbally). - *ḥamal min* to be offended by (s.o. or s.th.).
حامل *ḥaamil* /pl *ḥawaamil*/ **1** /adj/ pregnant. **2**ˈ /n/ stand, support. *ḥaamil garaayid* newspaper stand.
حملة *ḥamla* /n pl *-aat*/ **1** campaign. **2** load, burden, care. *ʔil-ʕiyaal ḥamla* children are a burden. *rabb-i-na yxaffif ḥamlit-ak* may God lighten your troubles!
حمل *ḥiml* /n/ **1** /pl *ḥumuul, ʔaḥmaal*/ load, burden. *xalli tawakkul-ak ʕal-allah wi-rmi l-ḥımlᵃ ʕal-baaqi [prov]* put your trust in God and cast your load on the Everlasting (or, as a pun: on others). *ʔil-ḥimlˈ btaaʕ il-mutoor* the (electric) load on the motor. ‖*ḥiml-u xafiif* his family responsibilities are few. - *ʔana miʃ ḥiml-ak* you're too heavy (or: too much) for me. **2** /pl *ḥimlaan*/ coarse woollen blanket.
حلي *ḥimali* /adj/ long-suffering, stoic.
حمول *ḥamuul* /adj */ long-suffering, stoic.
حمولة *ḥumuula* /n/ **1** load, burden (on a vehicle). **2** load limit, bearing capacity. *ḥumuulit ik-kubri xamsa ʈinn* the bridge has a load limit of five tons.
حمّال *ḥammaal: ḥammaal il-ʔasiyya* longsuffering, stoic, uncomplaining.
حمّالة *ḥammaala* /n pl *-aat*/ **1a** shoulder strap. *fanilla b-ḥammalaat* a sleeveless vest. **1b** braces, suspenders. **2** strap with which to carry a load. **3** trivet, tripod.
محمل *maḥmal* /n pl *maḥaamil*/ richly decorated camel litter; specifically, that formerly sent each year to Mecca with the Egyptian pilgrim caravan.
اتحمل *ʔitḥamal* /vi/ to be borne, be carried. - iva *miṭḥimil*.
انحمل *ʔinḥamal* = *ʔitḥamal*. - iva *minḥimil*.
حمّل *ḥammil* /vt/ **1** to load. *ḥammiluu ʕala gmaal* they loaded it on camels. *b-aḥammil-ak il-masʔuliyya* I hold you responsible. ‖*ḥammil il-faraamil* to slam on the brakes. **2** to support, hold up. *ʔik-kureek bi-yḥammil il-ʕarabiyya* the jack holds the car up. - vn *taḥmiil*; ava/pva *miḥammil*.
¶ *ḥammil ʕala* to lean on. *ḥaasis b-dooxa ʔiddii-ni k-kursi ʔaḥammil ʕalee* I feel giddy, give me the chair to lean on.
تحميل *taḥmiil* /n pl *-aat/ [arch]* load, weight.
تحميلة *taḥmiila* /n pl *-aat/ [auto]* block or chock at the end of a hydraulic lift ramp which prevents a car from rolling off.
اتحمّل *ʔitḥammil* /vt/ **1** to endure, put up with. *laazim nitḥammil mataaʕib il-ḥayaah* we must put up with the hardships of life. **2** to take upon oneself. *miin ḥa-yitḥammil il-masʔuliyya* who will assume the responsibility? - /vi/ **3** to be loaded, be carried. **4** to be held up, be supported. **5** to bear a grudge, bear malice. *miṭḥammil minni min yoom ma ʃatamt-u* he's had a grudge against me ever since the day I swore at him. - vn *taḥammul*; ava/iva *miṭḥammil*.
اتحامل *ʔitḥaamil* /vi/ to take sides (against s.o. or s.th.), make unreasonable demands (of s.o.), be hard (on s.o. or s.th.). *ma-titḥamil-fˈ ʕala balad-ak kida* don't be so hard on your country. *raʏmˈ ʔinni ʕayyaan itḥamilᵃ ʕala nafs-i w-ʕumt iftaʏalt* although I was ill I braced myself and set to work. - vn *taḥaamul*; ava *miṭḥaamil*.
احتمل *ʔiḥtamal* /vt/ to endure, suffer, put up with. *maskiina - ʔiḥtamalit kitiir* poor woman, she's had a lot to put up with in life. - vn *ʔiḥtimaal*; ava *miḥtimil*; pva *muḥtamal*.
¶ *yuḥtamal* it is possible, there is a possibility. *yuḥtamal ʔinnak tiqabl-u fis-sikka* you may just meet him on the way.
احتمال *ʔiḥtimaal* /n pl *-aat*/ possibility. *da mugarrad iḥtimaal ḥa-tiigi bukra* it is only a possibility that she may come tomorrow.
محتمل *muḥtamal* modal of possibility. *muḥtamal yiigi wi-muḥtamal ma-ygii-f* maybe he'll come, maybe he won't.
استحمل *ʔistaḥmil* **1** /vt/ to endure, put up with. *ʔiz-zahrˈ b-yistaḥmil in-naar* cast iron withstands fire. *ʔistaḥmilt-ik lamma l-marḥuum gooz-ik itwaffa laakin*

dilwaqti ... I put up with you till your husband died, but now .... **2** /vi/ to last, have stamina. *haatii-lu gazma kwayyisa ʕafaan tistaḥmil* buy him good-quality shoes so that they will last. *ʏaṣbin ʕan kull[i] maʃakl-ak laazim tistaḥmil* no matter what your problems are, you must carry on. - vn *ʃistiḥmaal*; ava *mistaḥmil*.

[2] (ح م ل)

حمل *ḥamal[2]↑* /n pl *ḥimlaan*/ **1** lamb. *ʃil-ḥamal [astrol]* Aries. **2** *[Chr]* offertory, (unconsecrated) Host.

حملاوى *ḥamalaawi* /adj */ from Hamoul, a village in Minufiya. *ḥamalaawi ya xaṣṣ* lettuce vendor's call.

[1] ح م م

حمى *ḥamma[1]* /vt/ **1** to bath. **2** to water a crop heavily, flood a field (e.g., of rice). - vn *taḥmiyya*; ava/pva *miḥammi*.

حمى *ḥuma* /n/ bathing. *yoom il-ḥuma* bath day. *ma-bi-yḥibb[i]-ʃ il-ḥuma* he doesn't like bathing.

حموم *ḥumuum* /n/ bathing. *ḥumuum il-ʕaruusa* (or *il-ʕariis*) the bride's (or groom's) traditional ceremonial bathing on the night preceding the consummation of a marriage.

حمّام *ḥammaam* /n pl *-aat*/ **1** bathroom, public bath-house, (loosely also) w.c., lavatory. *feen il-ḥammaam min faḍl-ak* where is the bathroom, please? ‖*zayy[i] ḥammaam bala mayya* (like a bathroom without water) utterly useless. - *duxuul il-ḥammaam miʃ zayy[i] xruug-u [prov]* it's easier to get yourself into a situation than it is to get out of it. **2** bath. *ʃiddeet-u ḥammaam* I gave him a bath. *xad ḥammaam* he took a bath. ‖*ḥammaam sibaaḥa* swimming pool. - *ḥammaam ʃams* a sunbathe.

حمّامجى *ḥammamgi* /n pl *-yya*/ *[obsol]* proprietor of, or attendant at, a public bath.

استحمّى *ʃistaḥamma* /vi/ **1a** to bathe, have a bath, wash oneself all over. **1b** *[euphem]* to have sexual intercourse (in reference to the bath that, according to Islamic precepts, must follow the act). **2** to bathe, go for a swim. - vn *ʃistiḥmaam↑*; ava *mistaḥammi*.

[2] ح م م see also [2] ح م ى

حمى *ḥumma* /n pl *ḥummiyyaat, ḥummiyaat*/ fever. *ḥumma muʕdiyya* an infectious fever. *ʃil-ḥumma l-ʃisbanyooli* Spanish influenza. *ḥumma ṣafra* yellow fever. *mustaffa l-ḥummiyaat* fever hospital, hospital for infectious disease. ‖*raagil ḥumma* a pest of a man.

محموم *maḥmuum* /adj */ **1** feverish, suffering from fever. **2** excited.

[3] ح م م

حمام *ḥamaam* /coll n/ pigeon(s), dove(s). ‖*ʃaal il-ḥamaam ḥaṭṭ il-ḥamaam* (the doves flew off, the doves flew down) a rhythmic chant used by children when pounding on the back of one of their number as part of a guessing game. - *dura ḥamaam* or *ḥamaam ya dura* corn as delicious as pigeon! (cry of the vendor of grilled corn-on-the-cob).

حمامة *ḥamaama* /n/ **1** /unit n, pl *-aat*/ a pigeon, a dove. *ḥamaamit is-salaam* the dove of peace. ‖ *ʃir-raagil zayy il-ḥamaama ʃiza rayyiʃit ṭaarit [prov]* a man is like a pigeon - when it grows feathers it flies away (advice to a woman to spend her husband's money lest it tempt him to marry another). - *(zayy il-)ḥamaama* very fast, as in *rawwaḥ ʕal-beet (zayy il-)ḥamaama* he went flying home. **2** /no pl/ *[children]* penis.

[1] ح م و

حموى *ḥamawi* /adj */ from Hama (in Syria). *ḥamawi ya miʃmiʃ* apricot vendor's cry.

[2] ح م و see [2] ح م ى : *ḥamw, ḥamwa*

[1] ح م ى

حمى *ḥama[3] (i)* /vt/ to protect, defend. *rabb-i-na yiḥmii-k* God keep you! *ʃana sawwaaq ʃaqdar ʃaḥmi nafs-i fiṭ-ṭariiq* I'm a driver who can take care of himself on the road. - vn *ḥimaaya*; ava *ḥaami*; pva *maḥmi*.

حماية *ḥimaaya* /coll n/ *[obsol]* European(s) in Egypt enjoying certain legal privileges. ‖ *ʃinta ḥmaaya* do you think you can get away with your (insolent) behaviour?

حامى *ḥaami[1]* /n */ protector (often used in intercessions to saints). ‖*ḥamii-ha ḥaramii-ha [prov]* its guardian is its robber (e.g., in reference to a corrupt upper official in an organization).

حامية *ḥaamiya↑* /n pl *-aat*/ garrison.

حمى *ḥima* /n/ **1** protection, patronage. *ʃana f-ḥimaa-k* I rely on your protection. **2** place of security, especially one's homeland.

انحمى *ʃitḥama* /vi/ to be protected, be defended. - iva *miṭḥimi*.

انحمى *ʃinḥama* = *ʃitḥama*. - iva *minḥimi*.

حامى *ḥaama* /vi/ to stand in defence. *dayman bi-yḥaami ʕan abuu* he always takes his father's side. - vn *miḥamiyya*; ava *miḥaami*.

محامى *muḥaami* /n * and pl *-yya*/ lawyer.

اتحامى *ʃitḥaama* /vi/ to take refuge (behind s.o. or s.th.), place oneself under protection. *ma-titḥamaa-ʃ fiyya* don't try to hide behind me! - ava *miṭḥaami*.

احتمى *ʃiḥtama* /vi/ to take refuge. - ava *miḥtimi*.

[2] ح م ى
حمى *ħimi (a)* /vi/ **1** to become hot. *ʕif-fams' ħimyit* the sun grew hot. **2** to become sharp. *ʕis-sikkiina ħimyit mis-sann* the knife got sharp with whetting. **3** to become pungent, strong or spicily hot in taste. **4** to become intense. *ʕil-matʃ' ħimi* the game warmed up. - vn *ħumuww. ħamayaan*; ava *ħaami, ħamyaan.*
حمى *ħama[4] (i)* /vt/ to heat (an oven or furnace). - vn *ħamy, ħamiyya*; ava *ħaami*; pva *maħmi.*
حميّة *ħamiyya* /n/ zeal, fervour, intensity. *raagil ma-ɛanduu-ʃ ħamiyya* he's a spineless fellow.
حامي *ħaami[2]* /adj */ **1** hot. *damm-u ħaami* he's hot-blooded. ‖ *bil-ħaami w-bil-baarid* by all possible means. *-la ɛala ħaami wala ɛala baarid* restive. **2** sharp. **3a** pungent, strong, spicy (to taste). **3b** unpleasantly sweet (to taste). **4** energetic, lively, quick.
حمو *ħamw* /n/ **1** heat. *ʕeeh il-ħamw' da* how hot it is! ‖ *ħamw in-niil* prickly heat. **2** rash.
حموة *ħamwa* /n pl *-aat*/ **1** /inst n/ a stoking. ‖ *fi-ħamwit-(u)* ≈ (strike) while the iron is hot, as in *xuff' fil-mawquuɛ fi-ħamwit-u* get on with the business while it's a hot issue. **2** *[mech]* spot of excess metal removed from a metal sheet with a welding torch. **3** a pimple.
حمّى *ħimmi: ʈumbaak ħimmi* a strong type of tobacco.
محمى *miħma* or *maħma* /n pl *-aat, maħaami*/ fire-chamber of a mud oven (see Pl.C, 10).
حمّى *ħamma[2]* /vt/ **1** to make spicy. *ħammi l-kaari ʃwayya* add more spice to the curry. **2** to vitalize, stimulate, intensify. *ʕig-goon illi ga f-ʕawwil diqiiqa ħamma l-matʃ* the goal which was scored in the first minute gave spirit to the match. ‖ *ħamma ʈ-ʈalq* to induce labour, as in *ʕil-baṣal bi-yħammi ʈ-ʈalq* onions induce labour. - vn *taħmiyya*; ava *miħammi.*
استحمى *ʕistaħma* /vt/ **1** to find to be or consider hot or spicy. **2** to select for spiciness. *ʕistaħmaa-li qarn' filfil min hinaak* find me a hot pepper from over there. - ava *mistaħmi.*

[3] ح م ى see [1] ح م م: *ħamma[1], ħuma, ʕistaħamma*

ح ن ب ل
حنبلى *ħanbali* /pl *-yyiin, ħanbaliyya, ħanabla*/ **1** /n/ adherent of the school of Islamic law named after Ahmad Ibn Hanbal. – /adj/ **2** Hanbalite. *ʕil-mazhab il-ħanbali* the Hanbalite school of law. **3a** rigid, strict, puritanical. **3b** finicky, fastidious.

[1] ح ن ت
حنت، حنب *ħint: ʕibn' ħint* opportunist, sharp operator.

[2] ح ن ت
حانوتى، حنوتى *ħanuuti* /n pl *-yya*/ one who prepares a corpse for burial, undertaker, mortician.

ح ن ت ف
حنتف *ħantif* /vt/ **1** to trim tiny pieces off (s.th.). *laazim tiħantif il-luqma bi-snaan-ak* do you have to nibble bits off the edge of the bread?! **2** to touch up, attend painstakingly to the appearance of (s.o. or s.th.). *ʈuul in-nahaar qaɛda tħantif fi-bint-a-ha* she fusses over her daughter's appearance all day long. *ħantifit ħawagib-ha* she plucked her eyebrows. - vn *ħantafa*; ava/pva *miħantif.*
حنتوفة *ħantuufa* /n pl *-aat*/ small piece, fragment.
اتحنتف *ʕitħantif* /vi/ **1** to have tiny pieces trimmed off. **2** to be touched up. **3** to preen oneself. - ava/iva *mitħantif.*

ح ن ث see [1] ح ن ت

ح ن ب ط
حنبوط *ħambuuṭ* /n pl *ħanabiiṭ*/ *[agric]* flowering shoot (e.g., of an onion, radish or carrot plant) grown for seed.
حنبط *ħambaṭ* /vi/ **1** *[agric]* to produce flowering shoots (of, e.g., onions, radishes, carrots). **2** *[slang]* to become erect (of the penis, clitoris, nipples). - vn *ħambaṭa*; ava *miħambaṭ.*

ح ن ج ر
حنجرة *ħangara↑* /n pl *ħanaagir*/ larynx, throat.

ح ن ج ل
حنجل *ħangil* /vt/ **1** to make (clothes) short or too short. *ʕinta ħangilt il-fustaan xaaliṣ* you've made the dress extremely short. – /vi/ **2** to hop on one foot. **3** to practise trickery and deception. *kaan ɛaayiz yiħangil fil-mawquuɛ bass iħna faqsiin-u kwayyis* he wanted to do some dirty work, but we are wise to him. - vn *ħangala*; ava *miħangil.*
حنجل *ħangal: bil-ħangal wil-mangal* (1) bringing bad luck. (2) using every possible means to achieve an end.
اتحنجل *ʕitħangil* /vi/ **1** to hop on one foot. *ʕawwil ir-raqṣ it-tiħangiil [prov]* (when one first dances, one hops) ≈ everything is difficult at the beginning, practice makes perfect. **2** to practise trickery. **3** to be made too short (of clothes). - vn *tiħangiil*; ava/iva *mitħangil.*

ح ن د ق
حندق *ḥandaq* /vt/ to make dainty and small. *ʕik-kaam ḥaaga lli ɛamaltii-ha fil-ʕooḍa ḥandaquu-ha* what you've done to the room has made it much more charming and intimate. *gineena mḥandaqa* a pocket-handkerchief of a garden. *bint' mḥandaqa* a petite girl. - vn *ḥandaqa*; ava/pva *miḥandaq*.
اتحندق *ʕitḥandaq* /vi/ to be made or become dainty and small. - iva *mitḥandaq*.

ح ن س
حنّس *ḥannis* /vt/ to tantalize, stimulate a desire that cannot be fulfilled. - vn *taḥniis*; ava/pva *miḥannis*.
اتحنّس *ʕitḥannis* /vi/ to be tantalized. - iva *mitḥannis*.

ح ن ش
حنش *ḥanaʃ* /n pl *ʕaḥnaaf, ḥiniʃa*/ snake, eel.

ح ن ش ص
حنشصة *ḥanʃaṣa* /n/ affected airs. *balaaf il-ḥanʃaṣa k-kaddaaba di* none of these ridiculous airs and graces!
محنشص *miḥanʃaṣ* /adj */ ostentatious, putting on airs.
اتحنشص *ʕitḥanʃaṣ* /vi/ to put on airs, affect a manner calculated to impress. - ava *mitḥanʃaṣ*.

ح ن ض ل
حنضل، حنظل *ḥanḍal* /coll n/ colocynth. ‖*ɛiʃt-u ḥanḍal* he has a wretched life.

ح ن ط
حنط *ḥiniṭ* /adj */ savoury (of food).
حناطة *ḥanaaṭa* /n/ savouriness, tastiness (of food).
حنوط *ḥunuuṭ* /n/ *[Chr]* embalming oils.
حنّط *ḥannaṭ* /vt/ to embalm. - vn *taḥniiṭ*; ava/pva *miḥannaṭ*.
اتحنّط *ʕitḥannaṭ* /vi/ to be embalmed. - iva *mitḥannaṭ*.

ح ن ط و ر
حنطور *ḥanṭuur* <perh T *hinto* from Hungarian> /n pl *ḥanaṭiir*/ horse-drawn cab. ‖*ḥanṭuur il-ɛeen* the orbital ridge of the eye. *ʕiddeet-u ɛala ḥanṭuur ɛeen-u* I gave him a real shiner.

ح ن ظ ل see ح ن ض ل

(ح ن ف)
حنفي *ḥanafi* **1** /prop n/ male given name. **2** /n * and pl *-yya, ʕaḥnaaf*/ adherent of the school of Islamic law named after Abu Hanifa. **3** /adj */ Hanafite. *ʕil-mazhab il-ḥanafi* the Hanafite school of law.
حنفيّة *ḥanafiyya* /n pl *-aat*/ tap, faucet.

ح ن ك ¹
حنكة *ḥunka, ḥinkaˀ* /n/ experience, skill.
حنّك *ḥannik* /vt/ to make (s.o.) experienced or worldly wise. *ḥannikit-u t-tagaarib* experience has taught him a thing or two. - vn *taḥniik*; pva *muḥannak*.
اتحنّك *ʕitḥannik* /vi/ to become or be made worldly wise, gain experience. - ava/iva *mitḥannik*.

ح ن ك ²
حنك *ḥanak* /n/ **1** animal's mouth. ‖*ḥanak is-sabɛ* snapdragon, antirrhinum. **2**↓ (person's) mouth. *ḥadd' fiina yiqdar yiftaḥ ḥanak-u* would anyone of us dare to open his mouth? *da lsaan-u ma-yidxul-f' f-ḥanak-u* he talks too much. ‖*ɛazam-hum bi-nuṣṣ[a] ḥanak* he invited them half-heartedly.

ح ن ك ش
حنكش *ḥankiʃ* /vi/ to rummage around, potter about. *ma-luu-ʃ fuxl' ɣeer il-ḥankaʃa* he's got nothing to do but potter around. - vn *ḥankaʃa*; ava *miḥankiʃ*.
محنكشاتي *miḥankaʃaati* /adj pl *-yya*/ dithery, confused.

ح ن ن ¹
حنّ *ḥann (i)* /vi/ **1** to show tenderness, behave kindly. *bi-tsiib-u l-ɣaayit ma yitnibiḥ wi-baɛdeen tiḥinn[a] ɛalee* she leaves him till he's cried himself hoarse and then her heart goes out to him. ‖*bi-yḥinn[a] ɛal-ɣalaaba* he gives alms to the poor. *-zayy il-wizz - ḥinniyya bala bizz [prov]* like the goose who mothers her goslings without breast feeding (of one who does nothing to prove his convictions). **2** to yearn. *da-na b-aḥinn' l-ʕayyaam zamaan* how I miss the old days! **3** to become soft. **4** to relax and begin to yield milk (of a dairy animal). *ʕil-baqara g-gidiida b-taaxud ɣalaba ɛala ma tḥinn* the new cow takes a lot of coaxing before she gives milk. - vn *ḥinniyya, ḥanaan, ḥaniin*; ava *ḥaanin*.
حنون *ḥanuun* /adj */ kind-hearted, affectionate, tender. *qalb-u ḥanuun* he has a kind heart.
حنين *ḥuneenˀ, ḥineen'* /prop n/ male given name. ‖*rigiɛ bi-xuffay ḥuneen* he came back empty-handed.
حنّين *ḥinayyin* /adj */ **1** kind, affectionate, tender. *qalb-u ḥnayyin* he's kindhearted. **2** soft, yielding. *martaba ḥnayyina* a soft mattress. *bi-titɛimil warda rṣaaṣ ɛafaan tibqa ḥnayyina ɛaṣ-ṣiini* the washer is made of lead so it will be easy on the porcelain.
أحنّ *ʕaḥann* /el/ more/most kind, affectionate or tender.

حنّن *ħannin* /vt/ **1** to cause to behave with kindness or tenderness. *ʕana ʕawz-u yitwassaṭ-li ʕandaha wi-yħannin ʕalb-a-ha ʕalayya* I want him to put in a good word with her and soften her heart towards me. ‖ *ʕallaah yiħannin (ʕaleek)* may God make people be kindly to you (said to a beggar when refusing him alms). **2** *[rur]* to calm and give confidence to (a dairy animal) as an encouragement before milking. - vn *taħniin*; ava *miħannin*.

انحنّن *ʕitħannin* /vi/ passive of *ħannin*. - iva *mitħannin*.

[2] ح ن ن see [1] ح ن ى: *ħinna*

[3] ح ن ن see ح ن ى ن: *ħineen*[2]

[1] ح ن ي

حنّة، حنّاء *ħinna* /n/ henna. ‖ *leelit il-ħinna* eve of consummation of a marriage when the bride and groom are traditionally decorated with henna. - *tamr' ħinna* mignonette.

حنّى *ħanna* /vt/ to dye with henna. ‖ *ya mħanni deel il-ʕaṣfuur ... huwwa l-manṣuur* O putter of henna on the bird's tail, he (name of the person referred to) is the victorious! (chant sung to oneself or another for encouragement). - vn *taħniyya*; ava *miħanni*.

انحنّى *ʕitħanna* /vi/ to be dyed with henna. - iva *mitħanni*.

[2] ح ن ى

حنى *ħana (i)* /vt/ to bend, twist. *ḍahr-u maħni* his back is bent. - vn *ħany, ħanayaan*; ava *ħaani*; pva *maħni*.

حنية *ħanya* /n pl *-aat*/ **1** bend, curve. ‖ *ħanyit ir-raḍaba* humiliation. **2** stoop.

حنيّة *ħaniyya* /n pl *-aat*/ low recess.

انحنى *ʔinħana* /vi/ **1** to bend or twist, be bent or twisted. **2a** to bow, curtsey. **2b** to stoop. - vn *ʔinħina*; ava/iva *minħini, munħani*.

انحناء *ʔinħinaaʔ↑* /n pl *-aat*/ bend, curve.

منحنى *munħanaʔ↑* /n pl *munħanayaat*/ bend, curve. *ʔis-sawwaaq laazim yudxul fil-munħana bir-raaħa* the driver should make the turn slowly.

انحنى *ʔitħana* = *ʔinħana*. - ava/iva *mitħini*.

ح ن ى ن

حنين *ħineen[2]↑: ħineen wi-mineen* a very long time, as in *kull' ħneen wi-mneen* once in a blue moon, *baʕd' ħneen wi-mineen* after endless waiting and bother.

ح ه

حه *ħah* /fem n, pl *-aat*/ sixth letter of the Arabic alphabet. - also *ħaa, ħaa, ħaaʔ*.

ح و ت

حوت *ħuut* /n pl *ħitaan*/ **1** whale. ‖ *zeet kibdit il-ħuut* cod-liver oil. **2** *ʔil-ħuut [astrol]* Pisces.

[1] ح و ج

حوج *ħawag (i)* /vt/ to expose to need, cause to need. *ʔallaaħ ma-yiħwig-na lii* may God never put us in a situation where we need him! *ʔilli tikrah wiff-u yiħwig-ak iz-zamaan li-ʕafaa [prov]* ≈ the person you hate the sight of now you may have to beg from later. ‖ *lamma ħawagit li-ḍarb* when it came to blows. - vn *ħawga, ħaaga*; ava *ħaawig*; pva *maħwuug*.

حوجة *ħawga* /n/ need, want, destitution. *ma-yzill'-ʃ il-bani ʔaadam ʔilla l-ħawga [prov]* nothing degrades a man like need. ‖ *wala ħawga* ≈ I don't need your help (any more). *wala (l-)ħawga li-...* there is no need for the help of ... (with reference to one whose unwilling assistance is dispensed with), as in *ʔana ʕamalt if-faay bi-nafs-i wala l-ħawgaa-lu* I made the tea myself without any help from the likes of him!

حاجة *ħaaga* /n pl *-aat*/ **1a** thing. object. *ʔinta gaayib il-ħagaat di mineen* where did you get these things from? ‖ *ħaagit il-ħukuuma* government property. - *ħaagit il-beet* the household shopping, the groceries. **1b** anything, something. *ma-ʕult'-ʃ ħaaga* (1) I didn't say anything. (2) I haven't raised any objection. *ma-ʃatamt-uu-ʃ wala ħaaga* I didn't insult him or anything of the sort! **2** matter, affair. *ʔiftakart-a-ha ħaaga basiiṭa* I thought it was a simple matter. — /no pl/ **3** need, want. *fi-waʕt il-ħaaga* in time of need. *ṣaaħib il-ħaaga ʔarʕan [prov]* a man in need is a headstrong man. *fi-ħaaga li-* in need of, as in *ʔana miʃ fi-ħaaga l-ʔayy' musaʕda minnu* I don't need any help from him. ‖ *ʕaḍa ħaaga* to relieve oneself. - *ʕaḍa minha* (or *maʕaaha) ħaaga* he had sexual intercourse with her.

أحوج *ʔaħwag* /el/ more/most needy.

احتوج *ʔitħawag* /vi/ to be exposed to need. *ʔin ʃa-lla ma-titħiwig-ʃ [women and beggars]* may you never be in need! - iva *mitħiwig*.

انحوج *ʔinħawag* = *ʔitħawag*. - iva *minħiwig*.

حوّج *ħawwig'* **1** /vt/ to expose to need, cause to need. *goz-ha miʃ miħawwig-ha l-ħaaga* her husband lets her want for nothing. **2** /vi except w foll *ʃiwayyit ħagaat*/ to shop, go shopping. - vn *taħwiig*; ava *miħawwig*.

تحوّج *ʔitħawwig'* /vi/ **1** to be exposed to need. **2** to shop, go shopping. - ava/iva *mitħawwig*.

احتاج *ʔiħtaag* **1** /vt/ to need. *yiħtaag fatla* it needs a piece of string. **2** /vi/ to be in need. *bi-yiħtaag li-taʕb'*

kitiir it requires a lot of effort. *huwwa lli miḥtag-li mif ʕana lli miḥtag-lu* it's he who needs me, not I who need him. - vn *ʕiḥtiyaag*; ava *miḥtaag*.

احتياج *ʕiḥtiyaag* /n pl *-aat*/ necessity, need.

محتاجات *miḥtagaat: ḥagaat wi-miḥtagaat* all sorts of things; this, that and the other.

ح و ج [2]

حوايج *ḥawaayig* /pl n/ **1** oddments. **2** giblets.

حوّج *ḥawwig*[2] /vt/ **1** to season with spices. **2** to add delicacies (such as raisins and nuts) to (food). - vn *taḥwiig*; ava/pva *miḥawwig*.

تحويجه *taḥwiiga* /inst n, pl *-aat, taḥawiig*/ a mixture of spices, seasonings or delicacies for adding to food.

محوّجة *miḥawwiga* /n/ a preparation of oil, sugar and other fattening substances taken to help one gain weight.

اتحوّج *ʕitḥawwig*[2] /vi/ passive of *ḥawwig*[2]. - iva *mitḥawwig*.

ح و ح و

حوحو *ḥuuḥu* /n/ last remains, all that's left.

ح و د

حود *ḥawad (i)* **1** /vt/ to turn, divert. *ma-tiḥwid-f*[i] *ʕiid-ak* don't turn your hand aside. *ʕiḥwid wiff il-ɛarabiyya ʃwayya* turn the front of the car a little. **2** /vi/ to turn, veer, change direction. *ʕiḥwid yimiin ya-sṭa* turn to the right, driver! - vn *ḥawadaan, ḥawda*; ava *ḥaawid*; pva *maḥwuud*.

حودة *ḥawda* /n pl *-aat*/ bend, turn.

حودايه *ḥawadaaya* /n pl *-aat*/ bend, turn (in a street).

اتحود *ʕitḥawad* /vi/ to be diverted, be turned aside. - iva *mitḥiwid*.

حوّد *ḥawwid* = *ḥawad*. - vn *taḥwiid*; ava *miḥawwid*.

¶ *ḥawwid ɛala* to drop in at, stop off at. *ḥ-aḥawwid ɛalee* I'll call in at his place on the way. *ḥawwidt*[a] *ɛal-baqqaal fa-tʃaxxart*[i] *ʃwayya* I stopped at the grocer's, so I was made a little late.

اتحوّد *ʕitḥawwid* = *ʕitḥawad*. - iva *mitḥawwid*.

ح و ر [1]

حارة *ḥaara* /n pl *-aat, ḥawaari*/ **1** narrow lane, alley (traditionally constituting a small neighbourhood). *laffifit-ni ḥaara guwwa ḥaara w-zuqaaq guwwa zuqaaq* she led me round about from lane to lane and alley to alley. *ʕil-ḥaara kull-a-ha stafaaɛit bil-mawḍuuɛ* the whole neighbourhood buzzed with the affair. **2** track or lane within a wider way (e.g., that for a single contestant in a running or swimming race, or a traffic lane).

محور *miḥwar* /n pl *maḥaawir*/ **1** axis. **2** axle.

محوري *miḥwari* /adj/ central. ‖*musmaar miḥwaari* pivot bolt.

محارة *maḥaara, muḥaara* /n pl *-aat*/ **1** /unit n/ a sea-shell. *raqeet-ak min ɛeen ig-gaara ʕaḥadd*[i] *mil-maḥaara* I have censed you against your neighbour's evil eye, sharper than a sea-shell. **2** plasterer's trowel, float. see further under م ح ر

حوّر *ḥawwar* /vt/ to change, modify, twist. *yaaxud il-fikra w-yḥawwar-ha* he takes the idea and adapts it. *ʕinta bi-tḥawwar kalaam-i* you're twisting my words! - ava *taḥwiir*; ava/pva *miḥawwar*.

اتحوّر *ʕitḥawwar* /vi/ to be changed, be modified, be twisted. - iva *mitḥawwar*.

حاور *ḥaawir* /vt/ **1** to dodge, feint. **2** to argue with, debate with. *ḥawir-ni ktiir fit-taman* he debated the price with me for a long time. **3** to keep (s.o.) guessing, play verbal games with. *ḥawir-ni mudda w-baɛdeen ɋal-li l-ḥaqiiqa* he kept me guessing for a while and then told me the truth. - vn *ḥiwaar, miḥawra*; ava *miḥaawir*.

حوار *ḥiwaar*↑, *ḥuwaar*↑ /n pl *-aat*/ dialogue.

اتحاور *ʕitḥaawir* /vi/ to debate, argue. - ava *mitḥaawir*.

ح و ر [2]

حور *ḥuur*[1]↑ /coll n/ houris.

حورية *ḥuriyya* /n pl *-aat, ḥawaari*/ houri, nymph.

حور *ḥawar* /n/ intense contrast between the white of the eye and the darkness of the iris (regarded as a sign of beauty).

ح و ر [3]

حور *ḥuur*[2]↑ /n/ kidskin.

حور *ḥuur*[3] /coll n/ poplar(s).

ح و ز

حاز *ḥaaz*↑ *(u)* /vt/ to obtain, gain possession of. - vn *ḥayazaan*; ava *ḥaayiz*.

حوزة *ḥooza* /n/ possession, property.

حيازة *ḥiyaaza* /n/ *[leg]* custody of land or property by right of ownership or tenancy. *kull*[i] *ḥyazt-u xamas fadadiin wi-ḥatta dool bil-ʕigaar* he only has control over five feddans and even those he rents.

انحاز *ʕinḥaaz* /vi/ to take sides, side (with s.o.). *ʕinḥaaz li-mraat-u ḍidd axuu* he sided with his wife against his brother. *ɛadam il-inḥiyaaz [pol]* non-alignment. - vn *ʕinḥiyaaz*; ava *minḥaaz*.

منحاز *munḥaaz* /adj/ *[pol]* aligned.

ح و س

حوس *ḥawas (i)* /vt/ to perplex, confuse, bewilder. *ʕeeh*

illi ħays-ak what is confusing you? - vn *ħawasaan*; ava *ħaayis*.

حوسة *ħoosa* /n/ perplexity, bewilderment, embarrassment. ‖ *ya ħoosa sooda* or *ya ħost-i [women]* ≈ what am I to do?!

احتاس *ʕiħtaas* /vi/ to become perplexed. *ʕawwil ma nizil maṣr iħtaas fi-kull[a] ħaaga* when first he came to Cairo, he was at a complete loss. ‖ *bi-yiħtaas fi-hduum-u* (he gets entangled in his own clothes) he can't cope with anything. - ava *miħtaas*.

ح و ش [1]

حاش *ħaaf (u)* /vt/ **1** to hold back, keep in, restrain. *ħuufi l-waad ya haanim* keep the child back, Madam. *saɛaat ma-tiqdar-f' tḥuuf nafs-a-ha wi-truuḥ mafguura fil-ɛiyaaṭ* sometimes she can't restrain herself and bursts into tears. *ħuufu l-ħaraami* stop thief! **2** to withhold, reserve. *ħaafit ik-kitaab ɛanni* she withheld the book from me. - vn *ħawaʃaan*; ava *ħaayif*.

¶ *ħaaf ɛan* to protect. *ħuuf ya rabb* Lord protect us! *ʃana ʃaɛraf aḥuuf ɛan nafs-i* I know how to look after myself.

حوش *ħoof* /n pl *ʃaḥwaaf, ḥiwaaf, ḥifaan*/ **1** yard, courtyard. *ħoof il-maḥaṭṭa* the forecourt of the station. *ħoof il-madrasa* school playground. *faraʃt-i-lhum ḥaṣiira fil-ħoof* I put down a mat for them in the courtyard (of the house). **2** sectioned-off plot of land. *bi-nizraɛ-u fi-ḥwaaf ɛaʃaan yiṭlaɛ ʃatl* we sow it in separate plots to produce seedlings. **3** graveyard.

حوّاش *ħawwaaf* /n */ **1** one who intervenes in a quarrel, mediator. **2** /no pl/ Protector (epithet of God). *ħuuf ya ħawwaaf [women in trad soc]* Lord protect us! (used sarcastically in quarrels).

انحاس *ʃitḥaaf* /vi/ to be retained, be held back. *ʃil-bool ɛandu tḥaaf* he suffers from retention of the urine. *ʃil-ɣaraama tḥaafit ɛannu* his fine was suspended. ‖ *ṣooṭ-u tḥaaf* he couldn't speak. - iva *mitḥaaf*.

انحاس *ʃinḥaaf* = *ʃitḥaaf*. - iva *minḥaaf*.

حوّش *ħawwif* /vt/ to put aside for later use. *ma-ħawwift'-f wala malliin* I haven't saved a penny. *bi-ngiib is-sibaax wi-nḥawwif-u l-ħadd il-muusim* we get the fertilizer and store it till the season. ‖ *ʃin ʃa-alla ma-ħadd[a] ħawwif [joc]* never mind the cost! - vn *taḥwiif*; ava *miħawwif*.

تحويشة *taḥwiifa* /inst n, pl *-aat, taḥawiif*/ savings, nest-egg. *taḥwiifit il-ɛumr* life-savings.

اتحوّش *ʃitḥawwif* /vi/ to be set aside for later use. - iva *mitḥawwif*.

ح و ش [2]

حوش *ħawaʃ* /coll n/ rabble, scum, dregs of society.

ح و ص ل see ح ص ل [2]

ح و ض

حوض *ħooḍ* /n pl *ʃiḥwaaḍ, ḥiwaaḍ, ʃaḥwaaḍ*/ **1** basin, sink. *ħooḍ maṭbax* kitchen sink. *ħooḍ ḥammaam* (1) bathroom sink. (2) bath tub. ‖ *ħooḍ rabaaba* peg box of a rebaba. **2a** *[agric]* field plot sectioned off for irrigation. *bi-nirwi l-ɣeeṭ bil-ħooḍ* we irrigate the field plot by plot. **2b** flower-bed or the like in a garden. **3** pelvis. *ħooḍ il-kilya↑ [anat]* renal pelvis. **4** dock. *ħooḍ gaaff* dry dock. **5** rectangular piece in tent appliqué work (see Pl.H, 6).

حوّض *ħawwaḍ* /vt/ *[agric]* to divide (a field) into irrigation basins. - vn *taḥwiiḍ*; ava/pva *miħawwaḍ*.

ح و ط

حاط *ħaaṭ (i)* /vi/ to surround. *ħaaṭu bii min kull' ḥitta* they surrounded him on all sides. ‖ *ʃaḥiiṭ-ak ɛilm* I inform you, I notify you. - vn *ḥayaṭaan*; ava *ḥaayiṭ*.

حيط *ḥeeṭ* = *ḥeeṭa*.

حيطة *ḥeeṭa* /n pl *ḥeṭaan*/ wall. *ʃil-ḥeṭaan laha wdaan [prov]* walls have ears. ‖ *ɛaqil-u ḥeeṭa* he's a blockhead. - *ʃil-ḥeeṭa l-waṭya kull in-naas tinuṭṭ[a] ɛaleeha [prov]* ≈ debase yourself and all men will abuse you. - *mifi gamb il-ḥeeṭa* to behave in a self-effacing way, keep out of trouble.

حوط *ḥawaṭ* /n/ cunning, slyness.

حواطة *ḥawaaṭa* = *ḥawaṭ*.

حويط *ḥawiiṭ* /adj pl *ḥuwaṭa*/ crafty, sly.

اتحاط *ʃitḥaaṭ* /vi/ (impersonal) passive of *ḥaaṭ*. *ʃitḥaaṭ biina* we were surrounded. - iva *mitḥaaṭ*.

حوّط *ḥawwaṭ* /vt/ to fence, enclose. *ḥawwaṭ ig-gineena* he put a wall around the garden. - vn *taḥwiiṭ*; ava/pva *miḥawwaṭ*.

تحويطة *taḥwiiṭa* /n pl *taḥawiiṭ*/ written charm carried in order to keep away evil spirits.

اتحوّط *ʃitḥawwaṭ* /vi/ **1** to be fenced in, be enclosed. **2** to close in (on s.o. or s.th.). *ʃitḥawwaṭu biina* they closed on us. **3** to wear a *taḥwiiṭa*. - ava/iva *mitḥawwaṭ*.

اتحاوط *ʃitḥaawaṭ* /vi/ **1** to make an enclosure (around s.o. or s.th.). *ʃitḥawaṭna biihum* we surrounded them. **2** to behave cunningly or deceitfully. *ḥa-titḥaawaṭ ɛala miin* who do you think you're trying to deceive? - ava *mitḥaawaṭ*.

أحاط *ʃaḥaaṭ↑* = *ḥaaṭ*. - vn *ʃiḥaaṭa*; ava *muḥiiṭ*.

إحاطة *ʃiḥaaṭa* /n pl *-aat*/ information, notification.

محيط *muḥiiṭ* **1** /adj */ surrounding. *ʕil-manṭiqa l-muḥiiṭa* the surrounding area. — /n pl *-aat*/ **2** circle, coterie. *fil-muḥiiṭ bitaɛ-na* in our circle, among our acquaintance. *muḥiiṭ il-ʕusra* the family circle. **3** *[math]* circumfererence. **4**↑ ocean. - /adjectivally/ *raagil muḥiiṭ* a man of boundless knowledge.

احتاط *ʕiḥtaaṭ* /vi/ to be cautious, take precautions. *ʕiḥtaaṭ minnu - da ḥalangi* watch out with him - he's a swindler! - vn *ʕiḥtiyaaṭ*; ava *miḥtaaṭ*.

احتياط *ʕiḥtiyaaṭ* /vn/ ‖ *ẓubbaaṭ l-iḥtiyaaṭ [mil]* reservist officers. - *min baab l-iḥtiyaaṭ* as a precaution.

احتياطات *ʕiḥtiyaṭaat* /pl n/ precautions.

احتياطى *ʕiḥtiyaaṭi* /adj * and invar/ precautionary, reserve, spare. *ḥabs iḥtiyaaṭi* detention pending investigation. *ɛagala ḥtiyaṭiyya* (or *ʕiḥtiyaaṭi*) spare tyre. - /adverbially/ *ḥ-agiib maɛaaya fluus ziyaada ḥtiyaaṭi* I'll bring some extra money with me for contingencies.

استحوط *ʕistaḥwaṭ* /vi/ to take precautions. *min baab il-istiḥwaaṭ* by way of precaution. - vn *ʕistiḥwaaṭ*; ava *mistaḥwaṭ*.

ح و ف

حوف *ḥoof: ḥoof zaaf* see *zaaf*.

ح و ق

حاق *ḥaaq (u)* /vi/ to be sufficient, be enough - vn *ḥawaqaan*; ava *ḥaayiq*.

حوّق *ḥawwaq* /vi/ to suffice, be satisfying. *mahma tiddii-hum barḍu miʃ miḥawwaq fiihum* no matter how much you give them it's never enough. ‖ *ʕik-kalaam ma-bi-yḥawwaq-ʃ*^{i} *fii* ≈ he is very thick-skinned. - vn *taḥwiiq*; ava *miḥawwaq*.

ح و ل

حال *ḥaal*^{1} *(u)* /vi/ to complete a full cycle (of time), go full circle. *ma-ḥal-ʃ*^{i} *ɛalee l-ḥool ʕilla w-huwwa mitgawwiz* by the same time the next year he was already married. - vn *ḥawalaan*; ava *ḥaayil*.

¶ *ḥaal been ... wi-been*↑ ... to prevent (s.o. or s.th.) from .... *huwwa lli ḥaal beeni w-been ʕinni ʕasiib il-balad* he is the one who prevented me from leaving the country.

حال *ḥaal*^{2} *(i)* /vt/ to transfer, pass over, refer. *ḥiil iʃ-ʃuɤl*^{i} *da ɛaleeha* pass this job over to her! *ḥaluu ɛal-maɛaaʃ* they pensioned him off. - vn *ḥeela, ḥayalaan*; ava *ḥaayil*.

حول *ḥiwil (a)* /vi/ to develop strabismus, become squint-eyed. - vn *ḥawal*.

حول *ḥawal (i)* /vt/ **1** to make (the eyes) squint, make (the eyes) look in different directions simultaneously. *ma-tiḥwil-ʃ*^{i} *ɛenee-k laḥsan tiḥwall* don't squint your eyes like that or you'll end up with a real squint. **2** to change the direction of. *ʕiḥwil ʕiid-ak ʃiwayya* direct your hand a little the other way. - vn *ḥawalaan*; ava *ḥaawil*.

حال *ḥaal*^{3} /masc and fem n/ **1** /pl *ʕaḥwaal*/ state, condition. *ʕil-ḥaal itɤayyar* things have changed. *ma-ʃii-ʃ ḥadd*^{i} *raaḍi b-ḥaal-u* no-one's ever satisfied with his situation. *laazim tiqbaluu-na ɛala ḥal-na* you must accept us as we are. *kull*^{i} *yoom ɛala di l-ḥaal* every day it's the same. *ʃahr*^{a} *ʕaw ʃahreen wi-kull*^{i} *feeʕ yirgaɛ li-ḥaal-u* a couple of months and everything will be back to normal. *ʕil-ʕaḥwaal is-siyasiyya fil-balad* the political conditions in the country. *ḥasab ma tismaḥ il-ʕaḥwaal* as conditions allow. *ʕil-ʕaḥwaal ig-gawwiyya* weather conditions. ‖ *ʕizzayy*^{i} *ḥaal-ak* or *ʕizzayy il-ʕaḥwaal* how are things? how are you doing? - *ɛala kull*^{a} *ḥaal* or *ɛala ʕayy*^{i} *ḥaal* in any case, at any rate. - *fil-ḥaal*↑ right away, immediately. - *bi-ḥaal-* a whole ..., an entire ..., as in *saaɛa b-ḥal-ha* a whole hour, *kiilu lahma b-ḥaal-u* a whole kilo of meat, *kursi nafareen bi-ḥaal-u* a whole double seat. - *ɛala ɋadd*^{a} *ḥaal-(u)* (1) commensurate with (s.o.'s) means as in *ʕil-ɛarabiyya miʃ ɋawi bass*^{a} *ɛala ɋadd*^{a} *ḥaal-i* the car is not up to much but it's all I can afford. (2) poor, badly off, as in *ʕiḥna naas ɛala ɋadd*^{a} *ḥal-na bass*^{i} *muḥtaramiin* we are poor people, but respectable. - *ʕil-ḥaal min baɛḍ-u* I'm as badly off as you are, as in *law kaan maɛaaya kunt addii-k bass il-ḥaal min baɛḍ-u* if I had any I'd give you some, but I'm no better off than you. - *ʕil-ḥaal wil-miḥtaal* everything to do with it, the whole works, as in *saʕalt-u ɛan ʕamr-u gab-li l-ḥaal wil-miḥtaal* I asked how he was (and) he told me the whole story, *bi-yṭallaɛ kirʃ-u w-maṣariin-u w-ḥaal-u w-miḥtaal-u* he takes out its tripes and its intestines and the whole kit and caboodle. - *la ɛandu ḥaal wala miḥtaal* he's destitute. - *daftar il-ʕaḥwaal* chronological register of events used particularly in a police station, police blotter. - *ʕil-ʕaḥwaal iʃ-ʃaxṣiyya [leg]* matters relating to personal status. **2** /no pl/ **2a** one's personal affairs, one's own business. *ḥa-nsiib-ak hina lamma nfuuf ḥal-na w-nirgaɛ naxd-ak baɛdeen* we'll leave you here while we tend to our business and come back and pick you up later. *miʃyu kull*^{i} *waaḥid wara ḥaal-u* each one went about his own business. ‖ *fi-ḥaal-(u)* about his own business, as in *ruuḥ fi-ḥaal-ak* mind your own business! *ʕana f-ḥaal-i wi-nta f-ḥaal-ak* you mind your business and I'll mind mine, *ṭuul ɛumr-i maafi gamb il-ḥeeṭa wi-f-ḥaal-i* all my life I've kept out of trouble and minded my own business,

siib-u f-ħaal-u leave him be! - *raaħ li-ħaal-(u)* to go (one's) own way, as in *ʈallaqt-a-ha w-raaħit li-ħaal-ha* I divorced her and she went her own way. - *ʔil-ħaal wiqif* business stagnated. *ħaal-i wiqif* I ceased to prosper. **2b** belongings. *limm' ɛzal-na w-lamlim ħal-na* get together our baggage and gather up our belongings. - *ʔaħwaal* /pl n/ **3a** (ways of) behaviour (usually with a pejorative implication). *ʔaħwaal-u ɤariiba* he's a queer fish, one can never tell what he'll do next. *ʔana mistaɛgib ɛala ʔaħwaal-u* I find everything he does extraordinary. **3b** *ʔil-ʔaħwaal* those supernatural powers (the ability to read the future, to be in more than one place at one time etc.) attributed to the most advanced Sufis.

¶ *ħaalan* /adv/ right away, immediately. *hiyya gayya ħaalan* she's coming right away.

حاله *ħaala* /n pl *-aat*/ **1** particular state or condition, situation, case. *ħaalit ʈawaariʔ* a state of emergency. *il-ħaala l-igtimaɛiyya* marital status. *fi-ħaalit ɤiyaab muwaẓẓaf* when an official is away. *fiqlit il-ħaala ɛala kida ʔusbuɛeen* it went on like that for two weeks. *ħalit-na dayyiqa fwayya l-yomeen dool* our (financial) situation is a bit tight these days. ‖*ħalt-ak ħaala* you're in a really bad way! - *bi-ħaalit il-fabriika* in factory condition, brand new. - *zayy" ħalaat-* like, *waaħid zayy" ħalaat-i* someone like me. **2a** case (of sickness). *ħaalit tayfuud* a case of typhoid. **2b** fit, attack, bout (of sickness, depression etc.). *ɛandu ħaala kida bi-tgii-lu lamma ykuun zaɛlaan* he suffers from a condition which makes him subject to an attack when he gets upset.

حالى *ħaali* /adj/ **1** actual. *ʔil-maqaas il-ħaali btaaɛ il-ʔaks* the actual size of the axle. **2** present, current. *fil-waqt il-ħaali* at the present time.

¶ *ħaalıyyan↑* /adv/ presently, at the present time.

حول *ħawl* /n/ power, might. *la ħawla wala quwwa ʔilla bi-llaah* (or, more commonly) *la ħawl illaah* there is no power or strength but with God! (an exclamation of helplessness and resignation), *ya ħawl illaah* O might of God! (an exclamation of resignation or indignation).

حول *ħool* /n/ year.

حولى *ħawli* /adj/ *[bot]* annual. *zuhuur ħawliyya* annual flowers.

أحول *ʔaħwal* /adj, fem *ħoola*, pl *ħuul*/ squint-eyed, cross-eyed.

حوالى *ħawaali* /adv/ approximately, circa. *ħawaali s-saaɛa tisɛa* about nine o'clock. *ħawaali xamsa mitr* about five or six metres.

حوالين *ħawaleen* /prep, w pron suff *ħawalee-* (w 1st sing *ħawalayya*)/ around, about. *suur ħawaleen il-beet* a wall around the house. *huwwa mif daari bi-lli ħawalee* he's oblivious to what's about him. ‖*ħawalee kalaam kitiir* he has a bad reputation.

حوالة *ħiwaala* /n pl *-aat*/ money order.

حوّال *ħawwaal* /n pl *-aat, ħawawiil/ [agric]* ridge of earth made to control the flow of water to a field being irrigated.

محال *muħaal* /n/ impossibility.

محول *maħwal* /n pl *maħaawil*/ = *ħawwaal*.

محولجى *miħwalgi* /n pl *-yya*/ railroad switchman.

انحال *ʔinħaal* /vi/ to be transferred, be shifted. *baɛd' xamsiin sana fil-wizaara ʔinħaal ɛal-maɛaaf* after fifty years in the ministry he was put on a pension. - *iva minħaal*.

انحال *ʔinħaal* = *ʔinħaal*. - *iva minħaal*.

انحول *ʔinħawal* /vi/ **1a** to develop a squint, develop strabismus (of the eyes). **1b** to be made to squint (of the eyes). **2** to be dislocated (of a joint). - *ava/iva miniħiwil*.

انحول *ʔinħawal* = *ʔinħawal*. - *ava/iva minħiwil*.

حوّل *ħawwil* /vt/ **1** to hand over, transfer. *ħa-yħawwil il-qaḍiyya ɛala l-maħaakim* he'll hand the case over to the courts. *ħawwil if-fiik liyya* he made the the cheque over to me. ‖*ħawwil [communic]* over! **2** to transform into, convert into. *xadu l-badroon wi-ħawwiluu maktab* they took the basement and turned it into an office. - vn *taħwiil*; ava *miħawwil*.

تحويلة *taħwiila* /n pl *-aat*/ **1** (telephone) extension. **2** liability. **3** points (on a railway).

محوّل *muħawwil* /n pl *-aat*/ *[elec]* transformer.

انحوّل *ʔinħawwil* /vi/ **1** to be handed over, be transferred. **2** to be transformed, be converted. - *iva miniħawwil*.

حاول *ħaawil* /vi/ to try, attempt. *ħawilt' maɛaaha bi-zooq* I tried being polite to her. *bi-tħaawil tiɤiz-ni* she is trying to irritate me. - vn *miħawla*; ava *miħaawil*.

محاولة *muħawla* /n pl *-aat*/ attempt.

أحال *ʔaħaal↑* /vt/ to transfer, pass over, refer. *ʔil-mudiir ʔaħal-ni lit-taḥqiiq* the director referred me for investigation. *qaaḍi l-ʔiħaala* magistrate whose job it is to evaluate sufficiency of evidence for trial. - vn *ʔiħaala*.

احوّل *ʔiħwall* = *ħiwil* - *ava miħwill*.

استحال *ʔistaħaal* /vi/ it was impossible. *ʔistaħaal ɛalayya ʔafahhim-u* it was impossible for me to make him understand. -/sometimes used w neg part *la* for emphasis/ *kaan la yistaħiil baɛd' kida ʔaħuṭṭ" ħaaga f-buqq-i* it was quite impossible for me after that to put anything in my mouth. - vn *ʔistiħaala*; ava *mustaħiil*.

استحالة *ʔistiħaala* /n/ *[Chr]* transubstantiation.

مستحيل *mustaħiil* /n pl *-aat*/ impossibility. ‖*min raabiɛ il-mustaħil* (or *il-mustaħilaat*) absolutely impossible.

ح و م
حام *ħaam (u)* /vi/ to hover (around s.th.). - vn *ħoom, ħawamaan*; ava *ħaayim*.
حومة *ħooma* /n/ empty piece of land, vacant lot.
حوّامة *ħawwaama* /n pl *-aat*/ hovercraft.

ح و ن see ح ى ى [1]: *ħiwaan*

ح و و
حوّاء *ħawwa[1]* /prop n/ Eve. *ya bint[a] ħawwa, ya-bn[a] ħawwa* terms used in spells to designate a person whose mother's name is unknown to the magician.

ح و ى [1]
حوى *ħawa[1] (i)* /vt/ to contain. - vn *ħawy*; ava *ħaawi*; pva *maħwi*.
حواية *ħawaaya* /n pl *-aat, ħiwyaan*/ coil of cloth or straw used as a pad under hard heavy loads carried on the head.
حويّة *ħawiyya* /n pl *-aat, ħiwy*/ pad under a camel-saddle.
حوّى *ħawwa[2]* /vt/ to coil (cloth or straw) for use as a *ħawaaya*. - vn *taħwiyya*; ava/pva *miħawwi*.
انحوّى *ʔiṯħawwa* /vi/ to be coiled for use as a *ħawaaya*. - iva *miṯħawwi*.
احتوى *ʔiħtawaṯ* /vi/ to contain. *ʔil-baaku b-yiħtiwi ɛala ɛaʃar ɛilab* the packet contains ten boxes. - vn *ʔiħtiwaaʔ*; ava *miħtiwi*.
محتويات *muħtawayaat* /pl n/ contents.

ح و ى [2]
حوى *ħawa[2] (i)* /vi/ **1** to conjure, do magic tricks. **2** to behave cunningly. - vn *ħawy, ħiwa*; ava *ħaawi*; pva *maħwi*.
حاوى *ħaawi* /n pl *ħuwaah*/ snake-charmer, magician, conjurer. ‖*ħa-tiftaval ħaawi ɛalayya* are you trying to deceive me? - *yaama fig-giraab ya ħaawi* see *giraab*.

ح ى ث see ح ى س

ح ى ج see ح و ج [1]: *ʔiħtiyaag*

ح ى د
حاد *ħaad (i)* /vi/ to deviate, stray. *ma-tħid-ʃ[i] ɛan il-ħaqq* don't stray from the truth! - vn *ħayadaan, ħiyaad*; ava *ħaayid*.
حياد *ħiyaad* /n/ neutrality. *xallii-k ɛal-ħiyaad* don't get involved. *ʔil-ħiyaad il-ʔigaabi* active neutrality.
حايد *ħaayid* /vt/ to handle cautiously, deal with diplomatically. *ʔana b-aħayid-hum ɛaʃaan ma-ħadd[i]-ʃ yismaɛ lina ħiss* I am always careful when I deal with them so as not to cause scenes. ‖*miħaayid nafs-u* minding his own business. - vn *miħayda*; ava *miħaayid*.
محايد *muħaayid* /adj */ neutral. *bilaad muħayda* neutral countries.

ح ى ر
حيرة *ħiira* /n/ perplexity, bewilderment. *kaanit ħirt-u ma-baɛd[a]-haa-ʃ ħiira* he was totally perplexed. ‖*ʃahr il-ħiira [rur]* the month of Baramhat when it is too cool to sit in the shade but too warm to sit in the sun.
حيران *ħayraan* /adj */ perplexed. ‖*ʔil-kalb il-ħayraan* pig-in-the-middle, game in which two or more players toss a ball to each other while one other player tries to get possession of it.
حيّر *ħayyar* /vt/ to confuse, bewilder. *ʔilli maɛaa ɢirf[i] mħayyar-u yigiib gooz ħamaam wi-yṭayyar-u [prov]* he who has some money and doesn't know what to do with it buys a pair of pigeons and flies them (a comment on the high cost of the hobby). - vn *taħyiir*; ava *miħayyar*.
اتحيّر *ʔiṯħayyar* /vi/ to be (put) in a quandary. - ava/iva *miṯħayyar*.
احتار *ʔiħtaar* /vi/ **1** to be perplexed, be at a loss. *ʔiħtart[i] f-ʔamr-i* I didn't know what to do. **2** to try one's utmost and still fail. *raagil ɛaguuz yiħtaar yirḍii-ki wi-ydallaɛ-ik* an old man would never manage to please and pamper you. *ʔana ħtart[i] maɛa l-ɛiyaal* I can't cope with the children. - ava *miħtaar*.

ح ى ز see ح و ز: *ħiyaaza*

ح ى س [1]
حيث *ħees* (also *ħees ʔinn-*) /conj/ since, as. *ħees kida ma-fii-ʃ maaniɛ* that being the case, there's no objection. *zayy[i] baɛḍ-u ħees ʔinnak miṣammim* O.K., since you insist.
¶ *min ħees* /prep/ with regard to. *min ħees il-mabdaʔ* in principle. *min ħees if-fakl* as far as the appearance is concerned. - *bi-ħees ʔinn-* /conj/ in such a way that, so that. *bi-nħuṭṭ-i-lha gilda b-ħees ʔinnaha ma-tnaqqaṭ-ʃ* we put a washer on it so that it won't drip.
حيثيّة *ħaysiyya* /n pl *-aat*/ **1** social position, standing. **2** *ħaysiyyaat* /pl n/ *[leg]* whereases, legal reasons (for a judgement).

ح ى س [2]
حيسى *ħeesi: ɛama ħeesi* complete blindness.

(ح ى ص)

حيص *ħeeṣ* /n/ perplexity. *fi-ħeeṣ beeṣ* at a complete loss.

حياصة *ħiyaaṣa* /n pl *-aat*/ girth, strap.

ح ى ض

حاض *ħaaḍ (i)* /vi/ to menstruate. - vn *ħeeḍ, ħayaḍaan*; ava *ħaayiḍ*.

حيض *ħeeḍ* /n/ menstruation, monthly period.

حيضة *ħeeḍa* /pl *-aat*/ instance noun of *ħeeḍ*.

ح ى ط see ح و ط: *ħeeṭ, ħeeṭa, muħiiṭ, ʕiħtaaṭ, ʕiħtiyaaṭ, ʕiħtiyaaṭi*

ح ى ف

حيّف *ħayyif* /vt/ to alloy (gold). - vn *taħyiif*; ava *miħayyif*.

اتحيّف *ʔitħayyif* /vi/ to be alloyed (of gold). - iva *mitħayyif*.

ح ى ق

حيّق *ħayyaq* /vt/ to flavour (food), especially by adding salt. - vn *taħyiiq*; ava/pva *miħayyiq*.

حياق *ħiyaaq* /n/ flavour (especially saltiness).

ح ى ل

حيل *ħeel* /n/ **1** strength. *ʔithadd' ħel-ha* she became exhausted. *ma-ʕad-ʃ' fii ħeel* he has no strength left. *m-aqdar-ʃ ʕaṣlub ħeel-i* I'm exhausted. ‖ *ħeel-ak* hold it! stop! *-ʃidd' ħeel-ak* (1) pull yourself together!, pull your socks up! (2) take courage, be brave! - *ʕuqʕud ʕala ħeel-ak* sit down! *ʕuqaf ʕala ħeel-ak* stand up! **2** side effect, after-effect.

حيلة *ħiila* /n/ **1** resource, means. *kull illi ħilt-i* all that I have. *ma-kan-ʃ' ħilt-u ħaaga* or *ma-ħilt-uu-ʃ* he didn't have a thing. *ma-xallit-ʃ' ħilt-u ħiila* she left him with nothing. ‖ *ʔil-ħiila* the only possession, as in *da ħiilit ʔumm-u* he is his mother's only child. *fii ʕandak wilaad ɣeer il-bint' di. - laʔ hiyya l-ħiila* 'Do you have any other children apart from this girl?' 'No, she is all I have.' **2** /pl *ħiyal*/ trick, ruse, stratagem. *ma-bil-yadd' ħiila* there is nothing to be done, one is helpless.

حيلى *ħiyali* /adj * and pl *-yya*/ artful.

حايلة *ħayla* /fem adj/ in heat (of a mare).

حايل *ħaayil* /vt/ to cajole. *ʕaʕad yiħaayil miraat-u ʕaʃaan tuxrug maʕaa* he kept trying to talk his wife into going out with him. - vn *miħayla*; ava *miħaayil*.

اتحايل *ʔitħaayil* /vi/ to beg, plead. *fiḍilt atħaayil ʕala ʃ-ʃawiif ʕaʃaan yifukk ik-kalabʃaat min ʔiday-ya* I kept pleading with the police officer to take off my handcuffs. ‖ *bi-yitħaayil ʕan-noom* he is trying desperately to get to sleep. - ava *mitħaayil*.

احتال *ʔiħtaal* /vi/ **1** to con, practise chicanery. **2** /preverb/ to try hard. *ʔiħtalt axallii yistannaa-k ma-fii-ʃ fayda* I tried in vain to make him wait for you. - vn *ʔiħtiyaal*; ava *miħtaal*.

محتال *miħtaal* /ava/ ‖ *ʔil-ħaal wil-miħtaal* see *ħaal*[3] under ح و ل .

محتال *muħtaal* /n */ con man, swindler.

ح ى ن [1]

حان *ħaan (i)* /vi/ to approach, draw near (in time). *ħaan is-safar* the time for departure has come. *lamma yħiin il-ħiin* when the time comes. - ava *ħaayin*.

حين *ħiin* /n pl *ʔaħyaan, ʔaħayiin*/ time, occasion. *fi-baʕḍ il-ʔaħyaan* sometimes. *been kull[a] ħiin wi-miin* ≈ once in a blue moon.

¶ *ʔaħyaanan* /adv/ sometimes. - *li-ħiin ma* /conj/ until. *ʔistanna l-ħiin m-aagi* wait until I come.

حيّن *ħayyin* /vt/ to supply with money. *lamma ʔaqbaḍ ħ-aħayyin-ak* when I get my wages I'll give you some money. - vn *taħyiin*; ava/pva *miħayyin*.

محيّن *miħayyin* /adj */ rich, well-off.

اتحيّن *ʔitħayyin* /vi/ **1** to have ready money. **2** to have one's finances replenished. - ava/iva *mitħayyin*.

¶ *ʔitħayyin il-furṣa* to watch for or seize an opportunity. *dayman bi-yitħayyin il-furaṣ ʕaʃaan yitxaaniq maʕaaya* he's always on the look-out for chances to pick a fight with me.

استحيّن *ʔistaħayyin*↓ /vi/ to have ready money. - ava *mistaħayyin*.

ح ى ن [2]

حيّانى *ħayyaani: balaḥ ħayyaani* a large reddish variety of date, eaten fresh.

ح ى و see ح ى ى

ح ى ى [1]

حيى *ħiyi (a)* /vi/ to live. *yiħya* (or *yaħya) r-rayyis* long live the president! - ava *ħayy*.

حيى *ħaya*[1] *(i)* /vt/ **1** to give life to, revive, vitalize. *ʔiħyii-ni n-nahar-da w-mawwit-ni bukra [prov]* ≈ sustain me today and you can do what you like with me tomorrow. **2** to perform, stage, put on. *ʔil-firqa ħayit sahriteen* the group gave two evening performances. *bi-yiħyu z-zaar bil-ʔugra* they perform the *zaar* for a fee. - vn *ħaya*; ava *ħaayi*; pva *maħyi*.

حيّ *ħayy*[1] /interj/: *ħayy*[a] *ɛala* ... hasten to ..., as in *ħayy*[a] *ɛala ṣ-ṣalaah [Isl]* come to prayer!

حيّ *ħayy*[2] **1** /adj */ alive, living. *ʕil-misiiħ il-ħayy* the living Christ. *zaxiira ħayya* live ammunition. **2** /n/ Living One (epithet of God).

حيّ *ħayy*[3] /n pl *ʕaħyaaʕ*/ **1** quarter, district, neighbourhood. *ħayy*[i] *raaqi* a high-class district. **2** one of the main administrative sectors within an Egyptian city. *ħayy il-ʕazbakiyya* the Ezbekiya district (in Cairo) *raʕiis il-ħayy* administrative head of a sector.

حيّة *ħayya*[1] /n pl *-aat*/ snake, serpent. *ʕilli tuqruṣ-u l-ħayya min del-ha yxaaf [prov]* and *ʕilli tuqruṣ-u l-ħayya yxaaf min garrit il-ħabl [prov]* who has been bitten by a snake fears its tail (or: fears the pulling of a rope). *ʕin ħabbit-ak ħayya ʕiṭṭawwaq biiha [prov]* ≈ cherish an offer of friendship no matter from whom.

حياة *ħaya*[2] /n/ (state of) life. *been il-moot wil-ħaya* between life and death. ‖*bil-ħaya* alive and well, alive and kicking, as in *dafanuu bil-ħaya* they buried him alive, *ya rabb*[i] *xud-ni bil-ħaya* O Lord, take me (now, although I am very much) alive.

حياة *ħayaah* /n, in constr *ħayaat*/ life. *ʕil-muhimm*[i] *ʕinn*[a] *ħayat-ha maɛaa tkuun saɛiida* the important thing is that her life with him should be happy. *ʕana f-ħayaat-i ma-ʃuft*[i]*-ʃ suuʕ ħaẓẓ*[i] *bif-ʃakl*[i] *da* all my life I've never seen such bad luck. *ħayaat-u fin-namiima* he thrives on gossip. ‖*ya ħayaat-i* a tender form of address. *-wi-ħyaat* an intensification of the oath particle *wi-*, as in *wi-ħyaat-ak, wi-ħyaat rabb-i-na, wi-ħyaat in-nabi, wi-ħyaat raħmit ʕabuu-k, wi-ħyaat maqaam il-ħuseen* etc., any of which may be used (1) in polite request, ≈ if you please, as in *wi-ħyaat-ak mumkin tiqul-li s-saaɛa kaam* please, would you tell me the time? (2) in strong affirmation, as in *wi-ħyaat-ak miʃ ħa-taxd-u* you certainly will not take it! (3) as a connection in narrative with little function other than to give a slight emphasis to the following words ≈ whereupon, so, as in *fa-qult-i-lu la muʕaxza ya-bn-i ma-xadt*[i]*-ʃ baal-i mil-ħikaaya wi-ħyaat-ik wi-xadt il-waad ɛala ħigr-i* then I told him, 'Sorry, son, I didn't think of that', and I took the kid on my lap. *- la ħayaata li-man tunaadi*↑ ≈ you're flogging a dead horse.

حيوى *ħayawi* /adj/ vital. *door ħayawi fil-masraħiyya* a vital role in the play. ‖*muḍadd*[a] *ħayawi* antibiotic.

حيويّة *ħayawiyya* /n/ vitality, vigour.

حيوان *ħayawaan* /pl *-aat*/ **1** /n/ animal. *ʕil-ħayawanaat il-manawiyya* spermatozoa. *gineenit il-ħayawanaat* the zoo. **2** /adj/ beastly, gross (of a person).

حيوانى *ħayawaani* /adj/ pertaining to animals, of animal origin.

حوان *ħiwaan*↓ /n pl *-aat*/ animal.

محيا *maħya* /n/ Sufi dhikr.

حيّا *ħayya*[2] /vt/ to greet, salute. *ħayyi ʕil-ɛalam* salute the colours! ‖*w-ana daaxil ig-gamɛa ħayyeet il-bawwaab bi-sgaara* as I was going into the University, I gave the doorman a cigarette in greeting. *-* vn *taħiyya*; ava/iva *miħayyi*. See further under [1] ت ح ى

تحيّة *taħiyya* /n pl *-aat, taħaaya*/ **1** salute, greeting. *maɛa taħiyyit if-firka* with the compliments of the company. ‖*ʕit-taħiyyaat [Isl]* that part of the Muslim ritual prayer which contains the creed and invocations of blessing on the prophets and saints. **2** food or drink offered in hospitality to a guest.

حايا *ħaaya* /vt/ *[agric]* to water (a crop) for the first time after the shoots appear. *-* vn *miħayaah*; ava *miħaayi*.

اتحايا *ʕitħaaya* /vi/ passive of *ħaaya*. *-* iva *mitħaayi*.

[2] ح ى ى

حياء *ħaya*[3] /n/ **1** diffidence, modesty, politeness. *ʕil-ħaya fir-riggaala ywarris il-faqr [prov]* diffidence in men brings poverty. *qaliil il-ħaya* indecent, shameless. **2** *[rur]* vagina (of a quadruped).

حيّ *ħayy*[4] /adj */ diffident, modest and well-mannered. *walad ħayy*[i] *wi-mrabbi kwayyis* a polite, well brought-up boy.

استحى *ʕistaħa* /vi/ to behave with or feel diffidence or embarrassment. *ʕistaħeet akallim-ha fiʃ-ʃaariɛ* I was too shy to talk to her in the street. *ʕinta ma-b-tistiħii-ʃ* aren't you ashamed of yourself? *ʕilli ma-yistiħi yifɛal ma yiftihi [prov]* who feels no shame acts as he pleases. ‖*ʕis-sitt il-mistiħiyya* Cape gooseberry fruit(s). *-* ava *mistiħi*.

استحيا *ʕistaħya* = *ʕistaħa*. *-* vn *ʕistiħya*; ava *mistiħyi*.

خ

خ ا
خا *xaa* /fem n/ seventh letter of the Arabic alphabet. ‖ *ʔil-mawḍuʕ-da ʕala ḥarf il-xaa* no one knows if this matter will turn out to be good or bad. - also *xaaʔ, xah*.

خ ا ء
خاء *xaaʔ* /fem n, pl *-aat*/ seventh letter of the Arabic alphabet. - also *xaa, xah*.

خ ا ش
خاش *xaaʃ: yinʕal xaaʃ-ak, yilʕan xaaʃ ʔabuu-k*, etc. ≈ damn you!

خ ا ل [1]
خال *xaal[1]* /n pl *ʔaxwaal, xilaan*/ **1** maternal uncle. **2**↓ familiar form of address to a youngish man.
خالو *xaalu* /n/ affectionate form of address to a maternal uncle. *xaalu ga* uncle came.
خالة *xaala* /n pl *-aat*/ **1** maternal aunt. **2** (also *xalt-i*) affectionate, familiar or respectful title of, and form of address or reference to **2a** a maternal aunt. **2 b**↓ an older woman. **2c** an older woman who is one's social inferior. ‖ *xalt-i ʕanduku* is my aunt here? (said in reference to one who dashes in to ask something and dashes out again as soon as he has the answer without bothering to observe the niceties expected of a visitor).

خ ا ل [2]
خال *xaal[2]* /n/ mole on the cheek, beauty spot.

خ ا م
خام *xaam* <P *khâm*> /adj invar/ **1** raw, unprocessed. *bilastik xaam* raw plastic. *ʔil-ḥadiid il-xaam* iron ore. **2** inexperienced, naive. *di bint' xaam lissa gayya mil-balad* she's an inexperienced girl just come from the village.
خامة *xaama* /n pl *-aat*/ **1** raw material. *xamaat iṭ-ṭibaaʕa* printing materials. *ʔil-ʕizaaz maṣnuuʕ min xamaat kitiira* glass is made from many materials. **2** quality, kind, type. *ʔil-xaʃab nafs-u laazim yikuun min xamaat kuwayyisa* the wood itself must be of good quality. ‖ *xamt-u kwayyisa* he's made of good stuff.

خ ا ن
خان *xaan'* <P *khân*> /n pl *-aat*/ *[obsol]* caravanserai, bazaar. ‖ *xaan il-xaliili* district of Cairo famous for its tourist bazaars, near el-Azhar mosque.
خانة *xaana* <P *khâna*> /n pl *-aat*/ **1** pigeon-hole (for papers etc.). *fii xaana b-raqam il-ʔooḍa yaaxud iz-zibuun minha l-muftaaḥ* there is a pigeonhole with the room-number on it from which the client takes his key. **2** blank space or box in a form. *ʔimḍi fil-xaana di* sign in this space. **3** *[math]* digit column. *xaanit il-ʔaḥaad* the units column. **4** point of a backgammon board, square on a chessboard or draught-board. ‖ *wiqiʕ fi-xaanit il-yakk* to be trapped totally, be trapped without hope of escape or release. **5** *[mus]* that section of an instrumental piece followed by the refrain. **6** jack on a telephone switchboard.
¶ *-xaana* suffix indicating a house or building, forming quasi-compounds with some nouns. *ʔil-ʔantikxaana* the Egyptian Museum. *ʔil-kutubxaana [obsol]* the Egyptian National Library (later *daar il-kutub*). ‖ *ʔil-muhandisxaana [obsol]* the School of Engineering. - *ʔadabxaana [obsol]* lavatory. - *ʃafaxaana* (1) *[mil]* clinic. (2) *[rur]* animal hospital.

خ ب ء see **خ ب ى**: *maxbaʔ, maxaabiʔ*

خ ب ث see **خ ب س**

خ ب ر [1]

خبر *xabar* [1] /vt/ to experience. *xabar il-ɛiifa f-ʕurubba* he experienced life in Europe. - vn *xibra*; ava *xaabir*.

خبرة *xibra* /n pl *-aat*/ experience. *ɛandu xibra ṭawiila f-mashḥ il-ʕaraaḍi* he has had a lot of experience in surveying. *bi-nistawrid xibraat fi-magaal iṣ-ṣinaaɛa* we import expertise in the industrial field.

خبر *xabar* [2] /n pl *ʔaxbaar*/ (item of) news. *diriit bil-xabar* did you hear the news? *xudu ʔaxbar-kum min ṣiɣar-kum [prov]* get the gossip from the children. || *ʔaxbaar-ak ʕeeh* ≈ how are you? how are things? - *ya xabar (ʕiswid* or *ʔabyaḍ)* exclamation of dismayed surprise ≈ good heavens! oh no! as in *ya xabar - ɛamal kida b-ṣaḥiiḥ* oh no! did he really do that? *ya xabar - laḍu ṣaraṣiir fil-gatooh* good grief! they found cockroaches in the cakes! - *fi-xabar kaan* over and done with, beyond recall. - *ḥ-aqṭaɛ xabar-ak* or *ḥ-agiib xabar-ak* I'll kill you! I'll finish you! - *ʔaaxir xabar* stop-press, late news. - *la ygiib xabar wala ywaddi xabar* useless, good-for-nothing. - *ʕil-xabar ʕeeh* what's the matter? - *xabar(-ak) ʕeeh* (said with irritation) what's up with you?

¶ *ʕidda xabar* to give forewarning, give notice. *ʕiddii-ni xabar ɋabliiha b-ʕiwayya* let me know a little beforehand. *ʕizzaay tixiib min ɣeer ma tiddi xabar* how come you absent yourself without notice?

خبريّة *xabariyya* /n pl *-aat*/ piece of news.

خبير *xabiir* /n pl *xubara/* **1** expert. *gaabu xubara ʔagaanib yiftaɣalu fis-sadd il-ɛaali* they brought foreign experts to work on the High Dam. *da xabiir fiz-zarra* he's an atomic expert. **2** (also *xabiir mutammin*) auctioneer.

أخبر *ʔaxbar* /el/ **1** better/best informed. **2** more/most experienced.

مخبر *muxbir* /n */ detective.

إخباريّة *ʕixbariyya* /n pl *-aat*/ (piece of) information passed to, e.g., the press, the police, the relevant authorities.

خبّر *xabbar* /vt/ to tell, inform. *xabbart abuu-k bi-nnina ḥa-nitgawwiz* have you told your father that we're getting married? - vn *taxbiir*; ava *mixabbar*.

مخبّرانى *mixabbaraati* /n pl *-yya/* tell-tale.

خابر *xaabir* /vt/ to pass on information to. - vn *mixabra*; ava *mixaabir*.

مخابرة *muxabra* (also *muxabra tilifoniyya*) /n pl *-aat*/ telephone call.

المخابرات *ʕil-muxabaraat* /pl n/ the Bureau of Intelligence, the Secret Service.

اتخابر *ʕitxaabir* /vi/ to be in communication. *ʕil-ɛaskari da txaabir maɛa l-ɛaduw waɋt il-ḥarb* that soldier passed on information to the enemy during the war. - ava *mitxaabir*.

اختبر *ʕixtabar* **1** /vt/ to test, assess, try out. *ʕil-xuṭuuba ɛaʃaan il-maxṭubiin yixtibru baɛɋ* the engagement period is for the couple to get to know each other. **2** /vi/ to have a deep spiritual experience. - vn *ʕixtibaar*; ava *mixtibir*.

اختبار *ʕixtibaar* /n pl *-aat/* **1** test, examination. *ʕixtibaar siwaaɋa* driving test. *bi-yiɛmilu xtibaar li-kull[i] ṭaalib* they give each student a test. *taḥt il-ixtibaar* on probation, under surveillance or observation, on trial. **2** spiritual or mystical experience.

استخبر *ʕistaxbar* /vi/ to inquire, make inquiries. - vn *ʕistixbaar*; ava *mistaxbar*.

خ ب ر [2] see خ ب و ر : *xabuur*

خ ب ز [1]

خبز *xabaz (i)* **1** /vt/ to bake (especially bread). || *ʕana ɛagn-u w-xabz-u* I know him inside out. **2** /vi/ to bake bread. *bi-nixbiz kull[i] ʕusbuuɛ* we bake bread every week. - vn *xabiiz, xabz*; ava *xaabiz*; pva *maxbuuz*.

خبّاز *xabbaaz* /n */ baker. || *ʕiddi l-ɛeef li-xabbaziin-u wa-law yaklu nuṣṣ-u [prov]* (give the bread to those who know how to bake it, even if they eat half of it) ≈ have it done by an expert even if it costs more.

مخبز *maxbaz* /n pl *maxaabiz/* bakery.

اتخبز *ʕitxabaz* /vi/ to be baked (especially of bread). *ɋabl il-ɛeef ma yitxibiz bi-yḥuṭṭu ɛalee simsim* before the bread is baked they put sesame on it. - iva *mitxibiz*.

انخبز *ʕinxabaz* = *ʕitxabaz*. - iva *minxibiz*.

خ ب ز [2]

خبّيزة *xubbeeza* **1** /coll n/ mallow(s). **2** /n/ *[obsol]* brothel.

خ ب س

خبث *xubs* /n/ **1** deceitful cunning, deviousness, wiliness. **2** defilement. *ʔaɛuuzu bi-llaah mil-xubs[i] wil-xabaayis* Lord protect me from all defilements (uttered notably when entering the lavatory).

خبث *xabaṯ* /n/ evil. *ʕil-xamra xabas* alcoholic drinks are a vice.

أخبث *ʔaxbas* /el/ **1** more/most cunning, devious or deceitful. **2** more/most wicked.

خبيث *xabiis* /adj pl *xubasa/* **1** deceitful, cunning, wily. *ya xabiis* you snake-in-the-grass! **2** *[path]* malignant. *waram xabiis* malignant tumour.

خبيثة *xabiisa* /n pl *xabaayis, xabaaʕiṣ*/ vice, sin. *ʕil-xamra ʕumm il-xabaayis* liquor is the root of all vices.

اتخابس ʕitxaabis /vi/ to act cunningly, behave deceitfully. - ava *mitxaabis*.

خ ب ص

خبص *xabaṣ (u)* /vi/ **1** *[deris]* to tattle, inform. *ḥa-yuxbuṣ ɛaleek law geet mitʕaxxar* he'll tell on you if you come late. **2** to practise deceit or trickery. *xabaṣ ɛaleena* he tricked us. **3** to intrigue. *miraat-u dayman tixbuṣ been ig-giraan* his wife is always setting the neighbours at odds with one another. **4** to philander. - vn *xabṣ*; ava *xaabiṣ*.

خبص *xabṣ* /n/ **1** deceit, fabrication. ‖ *ʕil-xabṣ' wil-labṣ* wiliness, deviousness, monkey-business, as in *baṭṭal ʕil-xabṣ' wil-labṣ' wil-laff' wid-dawaraan bitaaɛ-ak da* stop this deviousness and beating about the bush of yours, *ma-fiif ḥadd' ɛayyu fil-xabṣ' wil-labṣ* no one can tell tall stories the way he can. **2** philandering.

خبصة *xabṣa* /inst n, pl *-aat*/ a lie, a deception, a slanderous tale.

خبيصة *xabiiṣa* /n/ **1** concoction, mixture. **2** mess.

خبّاص *xabbaaṣ* /adj */ **1** lying, devious. **2** tell-tale. **3** philanderer.

خبّص *xabbaṣ* /vt/ to press, squeeze, squash together. *xabbaṣit il-ɛagiina* she kneaded the dough. ‖ *ma-txabbaṣ-ʃ iz-zarɛ* don't trample on the plants! - vn *taxbiiṣ*; ava/pva *mixabbaṣ*.

اتخبّص ʔitxabbaṣ /vi/ to be pressed or squeezed, be squashed together. - iva *mitxabbaṣ*.

خ ب ط

خبط *xabaṭ (a)* /vt/ **1** to hit, strike. *xabaṭ il-waad bil-ɛarabiyya* he hit the kid with the car. *xabaṭ-u ɢalam* he gave him a slap. ‖ *xabaṭ bi-kalaam* to address brusquely, as in *ma-tixbaṭ-nii-ʃ bi-kalaam-ak* don't use such hard words with me! - *xabaṭ miʃwaar* to go on a (long, tiresome) errand or journey. - *xabṭ' lazɢ* abruptly, without beating about the bush, as in *ɢaal xabṭ' lazɢ innaha maatit* he blurted out that she had died, *xuff' fil-mawɢuuɛ xabṭ' lazɢ* come right to the point! **2** to appropriate. *xabaṭ xabṭa kbiira* he landed a good deal, he made a killing. *xabaṭ il-filuus* he pocketed the money, he knocked off the money. — /vi/ **3** to rattle, knock, bang. *ʕil-baab xabaṭ* (1) the door banged. (2) there was a knock at the door. - vn *xabṭ*; ava *xaabiṭ*; pva *maxbuuṭ*.

خبط *xabṭa* /inst n, pl *-aat*/ **1** a knock, a blow. *xabṭiteen fir-raas tiwgaɛ [prov]* (two blows on the head hurt) ≈ one disaster can be endured, two are almost unbearable. **2** a coup. *xabṭa ṣaḥafiyya* a journalistic scoop. *xabṭa ʕaṣiila* a real coup. *xabṭit miɛallim* a master-stroke.

اتخبط ʔitxabaṭ /vi/ **1** to be hit or hit oneself, be knocked or knock oneself. *ɛarabiyyit-i txabaṭit min wara* my car was run into from behind. *ʔil-markib itxabaṭit fir-raṣiif* the ship struck the quay. ‖ *ʕin ʃa-lla ʕatxibiṭ fi-naẓar-i law ...* may I be struck blind if ... (as a disclaimer). - *da ʕakiid itxabaṭ fi-dmaaɤ-u ɛaʃaan yiṭṣarraf bif-ʃakl' da* he surely must be off his rocker to act like this. **2** to be appropriated. - ava/iva *mitxibiṭ*.

انخبط ʔinxabaṭ = ʔitxabaṭ. - ava/iva *minxibiṭ*.

خبّط *xabbaṭ* /vi/ **1** to give a series of knocks. *xabbaṭ ɛal-baab* he knocked at the door. ‖ *bi-yxabbaṭu maɛa baɛḍ' fil-kalaam* they bandy words with each other. **2** to emit a knocking sound. *ʔil-mutoor bi-yxabbaṭ* the engine is knocking. *ʔil-baab bi-yxabbaṭ* there's a knock at the door. **3** to behave confusedly, grope. *siib-u yxabbaṭ* let him blunder around, leave him in his confusion! - vn *taxbiiṭ*; ava/pva *mixabbaṭ*.

اتخبّط ʔitxabbaṭ /vi/ **1** to be hit, be knocked, be bumped. **2** to speak confusedly. *lamma txabbaṭ fi-kalaam-u ɢabaḍ ɛalee l-buliiṣ* when he gave contradictory statements the police arrested him. - ava/iva *mitxabbaṭ*.

خ ب ل [1]

خبل *xabal' (i)* /vt/ to stupefy. *yuuh - ʔil-fustaan da yixbil* my! that's a stunning dress! *ʔil-bint' xabalit-ni* the girl made me flip. - vn *xabal*; ava *xaabil*; pva *maxbuul*.

خبل *xabal*[2] /n/ lunacy. *ɛandu xabal* he's crazy.

اتخبل ʔitxabal /vi/ to be stupefied. - iva *mitxibil*.

انخبل ʔinxabal = ʔitxabal. - iva *minxibil*.

خبّل *xabbil* /vt/ to make a mess of, spoil. *ʔiṭ-ṭabbaax xabbil il-ʃakl* the cook ruined the food. *ʕinti xabbilti il-waad* you spoiled the boy. - vn *taxbiil*; ava/pva *mixabbil*.

خ ب ل [2]

خبل *xabal*[3] /coll n/ barnacles and seaweed etc. encrusted on the bottom of a boat.

خ ب و ر

خابور *xabuur* /n pl *xawabiir*/ wedge, wooden peg or plug. ‖ *xabuur miʕarri* (1) a nasty trick. (2) a tight spot, a nasty situation.

خ ب ي

خبى *xiba* /n/ **1** seclusion, hiding. *ɢaaɛid fil-xiba* (he is) hiding himself away. *ʔil-ɢumaaʃ iṣfarr' min kutr il-xiba* the fabric turned yellow from being stored away so long. **2** secluded quarters for bedouin women.

خبايا *xabaaya* /pl n/ hidden things, secrets, intricacies. *huwwa ɛaarif kull[i] xabaaya l-qiṣṣa* he knows all the ins and outs of the story.

خابية *xabya* /n pl *-aat, xawaabi/* large jar, vat.

مخبأ *maxbaʔ* /n pl *maxaabiʔ/* air-raid shelter.

خبّى *xabba* /vt/ to conceal, hide. *kaan mixabbi l-musaddas taḥt il-maxadda* he was hiding the gun under the pillow. *bi-txabbi ɛanni kull[a] ḥaaga* she hides everything from me. *ʕinta bi-txabbi ɛala mraat-ak* are you hiding your affairs from your wife? - vn *taxbiyya*; ava/pva *mixabbi*.

اتخبّى *ʔitxabba* /vi/ **1** to be hidden. **2** to hide oneself. - ava/iva *mitxabbi*.

استخبّى *ʔistaxabba* /vi/ **1** to hide oneself. *ʔistaxabbeet minni leeh* why did you hide from me? ‖*sitt[i] mistaxabbiyya* Cape gooseberry fruit(s). **2** to become hidden. *misiir il-mistaxabbi ybaan* hidden truths come out. *rabb-i-na yikfii-na ʃarr il-mistaxabbi [prov]* may God protect us from the evil of the unknown. - ava/iva *mistaxabbi*.

خ ت م

ختم *xatam (i)* /vt/ **1a** to stamp. *ʔiṣ-ṣarraaf bi-yixtim-lu l-waṣl* the cashier stamps the receipt for him. **1b** to seal. **2** to conclude, finish (a reading, recitation etc.). *xatam il-qiṣṣa* he finished the story. *w-axtim kalaam-i biṣ-ṣalaatu ɛan-nabi* and I finish my tale by blessing the Prophet (closing formula used by narrators of popular epics). ‖*xatam iṣ-ṣala* to follow the Muslim ritual prayer with certain prescribed devotional formulae. - *xatam il-qurʔaan* (1) to recite the entire Koran at a *xatma* (q.v.). (2) to complete one's memorization of the Koran. **3** to pin down (an opponent's shoulders, in wrestling). — /vi/ **4** to be completed, be finished. ‖ *ʔahi xatamit* and that's the last straw! **5a** to heal over, close (of a wound). *ʔig-garḥ[i] xatam* the wound healed over. **5b** to form a skin (of fluids such as milk). - vn *xatamaan, xatm, xitaam-* ava *xaatim*; pva *maxtuum*.

ختم *xatm* /n pl *xawaatim/ [coarse]* arsehole, anus.

ختمة *xatma[t]* /n pl *-aat/* evening ceremony held at the time of a death or of a happy event, or in fulfilment of a vow, the main feature of which is the recitation of the entire Koran.

الختمة *il-xatma, ʔil-xitma[t]* /n/ Koran. *wil-xatma ʃ-ʃariifa* by the Holy Koran!

ختام *xitaam* /n/ ending, conclusion. *ʔaḥsan* (or *misk il-) xitaam* the best of endings, as in *ʔin ʃa-lla ʃ-ʃuɤa titxitim ʔaḥsan xitaam* let's hope the work reaches the most successful possible conclusion. ‖ *ʔil-xitaam iṣ-ṣuɤayyar* the memorization of the thirtieth, twenty-ninth, and twenty-eighth parts of the Koran. - *ʔil-xitaam ik-kibiir* the memorization of the complete Koran.

ختامى *xitaami* /adj/ final, concluding. *ʔil-maʃhad il-xitaami* the final scene.

خاتم *xaatim* /n pl *xawaatim/* **1** finger ring more elaborate than a plain band (cf *dibla*). ‖*xaatim sulaymaan* the seal of Solomon. *-ʃaɛr[i] xawaatim* curly hair. *-makaroona xawaatim* macaroni. *-faḍḍ il-xaatim* de-flowering (on the occasion of marriage-consummation). **2** motif in tent appliqué designs (see Pl.H, 18). **3** anus.

خاتم *xaatam: xaatam il-ʔanbiya* the last of the prophets (epithet of the Prophet Muhammad).

خاتمة *xatma, xaatima[t]* /n pl *xawaatim/* end, conclusion. *ʔil-ʔumuur bi-xawatim-ha* all's well that ends well.

ختم *xitm* /n pl *ʔaxtaam, xitaam/* **1** stamp. *xitm[i] tariix* date stamp. **2** seal. *xitm ig-gumhuriyya* the Seal of the Republic. ‖*ḥaṭṭ[i] xitm(-u) ɛala [abus]* to set one's seal on, label as one's own (without right), as in *manaɛ-ak tifrab leeh - huwwa ḥaṭṭ[i] xitm-u ɛal-ḥanafiyya* why won't he let you drink? - has he staked a claim on the tap?

ختّام *xattaam* /n */* employee whose function is related to stamping operations (e.g., policeman in charge of finger-printing suspects, employee who stamps grades on carcasses in a slaughterhouse).

ختّامة *xattaama* /n pl *-aat/* ink pad.

اتختم *ʔitxatam* /vi/ **1** to be stamped. *ʔitxatam bil-maqbuul* it has been stamped Approved. **2** to be sealed. **3** to end, come to an end. - ava/iva *mitxitim*.

انختم *ʔinxatam* = *ʔitxatam*. - ava/iva *minxitim*.

خ ت ن

ختن *xatan (i)* /vt/ to circumcise. - vn *xitaan[t]*; ava *xaatin*; pva *maxtuun*.

ختان *xitaan[t]* /n/ circumcision.

ختّن *xattin* /vt/ to inoculate, vaccinate. - vn *taxtiin*; ava/pva *mixattin*.

اتختّن *ʔitxattin* /vi/ to be inoculated, be vaccinated. - iva *mitxattin*.

خ ج ل

خجل *xigil (a)* /vi/ to become shy or embarrassed. *xigilt[i] lamma smiɛt in-nukta* I was embarrassed when I heard the joke. - vn *xagal*; ava *xaglaan*.

خجول *xaguul* /adj */* bashful, shy.

خجّل *xaggil* /vt/ to embarrass, put to shame. - vn *taxgiil*; ava *mixaggil*.

أخجل *ʔaxgal* /vt/ to embarrass, put to shame. ‖*ʔaxgaltum tawaquɛ-na* you've embarrassed me,

you've made me feel unworthy of your praise.

خ د see ء خ د: *xad, xud*

خ د د

خدّ *xadd* /n pl *xuduud*/ **1** cheek. *ɛala xadd-u ʃaama* on his cheek is a mole. ‖*ɛamal li-... xadd-u madaas* (to make one's cheek a stepping place for ...) to treat with the utmost deference. ‖*ʃaḥmar xuduud* rouge. **2** *[naut]* one of the two supporting blocks (partners) at the foot of a mast.

خدّيّة *xudadiyya* or *xududiyya* /n pl *-aat*/ small pillow, cushion.

مخدّة *mixadda* /n pl *-aat*/ **1** pillow, cushion. **2** *[elec]* armature coil. **3** *[arch]* pile-cap.

خ د د و ج

خدّوجة *xadduuga* /n pl *xadadiig*/ pair of cross-thonged sandals.

خ د ر ¹

خدّر *xaddar* /vt/ **1** to drug. *duktuur il-bing' bi-yxaddar il-mariiq qabl ig-giraaḥa* the anaesthetist anaesthetizes the patient before surgery. *ʃil-ḥaʃiiʃ bi-yxaddar* hashish has a drugging effect. **2** to lull into a false sense of security. - vn *taxdiir*; ava/pva *mixaddar*; ava *muxaddir*↑.

مخدّرات *muxaddaraat*¹ /pl n/ drugs, narcotics. *mukafḥit il-muxaddaraat* Narcotics Division (of a police department).

اتخدّر *ʃitxaddar* /vi/ to be drugged. - iva *mitxaddar*.

خ د ر ²

مخدّرات *muxaddaraat*² /fem pl adj/: *ʃis-sittaat il-muxaddaraat*↓ aristocratic women sheltered and protected from hardship.

خ د ش

خدش *xadaʃ (i)* /vt/ to scratch. *ʃil-luuri xadaʃ ɛarabiyyit-i* the truck scratched my car. ‖*ʃayy' kilma mumkin tixdiʃ sumɛit-ha* anything can damage her reputation. - vn *xadʃ*; ava *xaadiʃ*; pva *maxduuʃ*.

خدش *xadʃ* /n pl *xuduuʃ*/ scratch.

خدشة *xadʃa* /inst n, pl *-aat*/ a (single) scratch.

اتخدش *ʃitxadaʃ* /vt/ to be scratched. - iva *mitxidiʃ*.

انخدش *ʃinxadaʃ* = *ʃitxadaʃ*. - iva *minxidiʃ*.

خدّش *xaddiʃ* /vt/ to scratch repeatedly, make scratches on. *ma-txallii-ʃ il-quṭṭa txaddiʃ il-mubilya* don't let the cat scratch the furniture. *ʃil-bistim il-qadiim xaddiʃ is-silindar* the old piston made scratches on the cylinder. - vn *taxdiiʃ*; ava/pva *mixaddiʃ*.

اتخدّش *ʃitxaddiʃ* /vi/ to be scratched repeatedly or extensively. - iva *mitxaddiʃ*.

خ د ع ¹

خدع *xadaɛ (a)* /vt/ to trick, deceive. *xadaɛna l-ɛaduw bi-munawraat* we took the enemy in with manoeuvres. ‖*ʃil-ḥarb' xidɛa [prov]* ≈ all's fair in war. ‖*ʃarbaab il-xidaaɛ [obsol]* politicians. - vn *xidaaɛ*, *xidɛa*; ava *xaadiɛ*; pva *maxduuɛ*.

خدعه *xidɛa* /n pl *xidaɛ*/ deception, swindle, trick, bluff. ‖*xidɛa sinimaʃiyya* gimmick, trick photography in cinema.

خديعه *xadiiɛa* /n pl *xadaayiɛ*/ deceit, treachery.

خدّاع *xaddaaɛ* /adj */ deceitful, deceptive (of s.o. or s.th.).

انخدع *ʃinxadaɛ* /vi/ to be tricked, be taken in. *ʃin-naas il-busaṭa b-yinxidɛu bil-ḥiyal il-basiiṭa* simple people are deceived by simple tricks. - iva *minxidiɛ*.

اتخدع *ʃitxadaɛ* = *ʃinxadaɛ*. - iva *mitxidiɛ*.

خ د ع ²

خدّع *xaddaɛ* /vt/ *[cook]* to cook (fried onions) in tomato purée. - vn *taxdiiɛ*; ava/pva *mixaddaɛ*.

مخديعة *taxdiiɛa* /n/ fried onions cooked with puréed tomatoes (a basic constituent of many Egyptian dishes).

اتخدّع *ʃitxaddaɛ* /vi/ *[cook]* (of onions) to be fried and then cooked in tomato purée. - iva *mitxaddaɛ*.

خ د ع ³

مخدع *maxdaɛ*↑ /n pl *maxaadiɛ*/ sleeping-place. ‖*mara maxdaɛ*↓ voluptuous woman.

خ د ل

خدل *xidil (a)* /vi/ to become numb. *rigl-i xidlit* my leg went numb. ‖*ma-b-yixdal-ʃ* (1) he is always nagging. (2) he is always going places. - *zayy ir-rigl il-xadlaana [deris]* useless (like a numb leg). - vn *xadalaan*; ava *xadlaan*.

خدّل *xaddil* **1** /vt/ to numb. *tuql if-ʃanṭa xaddil kitf-i* the weight of the bag numbed my shoulder. **2** /vi/ to become numb. *rigl-i xaddilit min kutr il-quɛaad* my leg became numb from so much sitting. - vn *taxdiil*; ava/pva *mixaddil*.

خ د م

خدم *xadam*¹ *(i)* /vt/ **1a** to serve, wait on. *ʃis-suɛaah illi b-yixdimu l-muwaẓẓafiin* the messengers who serve the employees. *ʃaxrit xidmit il-yuzz*ª *ɛalqa [prov]* the up-

shot of serving a Turk is a beating (said when one gets ingratitude in return for a service). **1b** to do (s.o.) a favour, perform a service for. *ʕana ḥ-axdim-ak fi-taɛyiin ibn-ak* I will do what I can for you to get your son appointed. **1c** to support, strengthen. *bi-ynaqqi ṣ-ṣuwar illi b-tixdim il-maqaal* he picks the illustrations that best back up the article. **2** to work (s.th.) with due care and skill, manipulate (skilfully) by labour. *xadamt il-xaʃab biz-zeet* I gave the wood the oiling it needed. *xidmit il-ʕarḍ* working the land. *ʕintaag maṣr' kwayyis bass illi yixdim-u laazim yikuun ḍaqiiq* the Egyptian (product) is all right, but the one who works with it has to be nifty. — /vi/ **3** to serve, do service. *xadam fig-geef* he served in the army. *malaff il-xidma* the employment record. **4** to be of use. *ʕif-fuṿl' da ma-yixdim-ʃ* this work is useless! - vn *xidma*; ava *xaadim*; pva *maxduum*.

خدمه *xidma* /n pl *xadamaat*/ **1** service. *yilzam (ʕayy') xidma* is there anything I can do for you? *xidma ɛaskariyya* military service. ‖ *ʕayy' xidma* (1) is there anything more I can do for you? (2) at your service! **2** *[Chr]* (organized) meeting or service in church. — /no pl/ **3** *[Isl]* **3a** distribution of free food and drink at the time of *muulid* (q.v.) celebrations. **3b** food and drink so distributed.

خادم *xaadim* /n pl *xuddaam*/ **1** mosque custodian, mosque janitor. **2** *[Chr]* lay worker, volunteer worker in a church. **3** *[frozen contexts]* one who serves, servitor, servant. *sayyid il-ɋoom xadim-hum [prov]* the lord of the people is their servant. *xaadim ir-rabb* or *xaadim il-ʕingiil [Chr]* form of reference to a Protestant minister. *xuddaam l-ism [magic]* spirits assigned to certain roles.

مخدوم *maxduum*↑ /n */ employer, master.

خدم *xadam*[2] /coll n/ servants, attendants. *sillim il-xadam* the servants' stairs. ‖ *xadam wi-ḥaʃam* servants and followers-on, entourage.

خدوم *xaduum* /adj */ helpful, obliging (of a person).

خدّام *xaddaam* /n */ male servant. *xaddaam-ak ya beeh* (I'm) your servant, Sir!

خدّامة *xaddaama* /n pl *-aat*/ female servant, maid.

اتخدم *ʕitxadam* /vi/ passive of *xadam*. - iva *mitxidim*.

انخدم *ʕinxadam* = *ʕitxadam*. - iva *minxidim*.

خدّم *xaddim* /vt/ **1** to find employment for, put to work. *huwwa bi-yxaddim if-faṿṿaliin fil-biyuut* he finds jobs for servants in private houses. *xaddimt-u ɛand[a] ɛamm-i* I got him work at my uncle's. *maktab taxdiim* domestic employment agency. **2** to bring into direct contact, make even or level. *xaddim il-maktab ɛala l-ḥeeṭa* put the desk flush against the wall. **3** to cause to serve. *ṭuul ma huwwa ɋaaɛid bi-yxaddim illi ḥawalee* all the while he's sitting there he keeps people around him busy. — /vi/ **4** to come into direct contact, meet properly. *ʕit-tirseen ma-bi-yxaddimuu-ʃ maɛa baɛḍ* the two cogs don't mesh. - vn *taxdiim*; ava *mixaddim*.

¶ *xaddim ɛala* to serve. *xaddim ɛaḍ-ḍuyuuf il-ʕawwil* serve the guests first.

مخدّم *mixaddim, muxaddim*↑ /n */ = *mixaddimaati*.

مخدّماتي *mixaddimaati* or *mixaddamaati* /n pl *-yya*/ employment agent for domestic help.

اتخدّم *ʕitxaddim* /vi/ passive of *xaddim*. - iva *mitxaddim*.

استخدم *ʕistaxdim* **1**↑ /vt/ to make use of. *ʕif-feex bi-yiɛraf yistaxdim ig-ginn* the sheikh knows how to use the jinn (to serve him). - /the literary passive form occurs frequently in elevated speech/ *da n-nooɛ illi b-yustaxdam fil-maktab* that's the type used in the office. **2**↓ /vi/ to take up employment. *balaaʃ tistaxdim fil-ḥukuuma* don't work for the government. - vn *ʕistixdaam*; ava/pva *mistaxdim*; pva *mustaxdam*.

مستخدمين *mustaxdimiin* /pl n/ personnel. *mudiir il-mustaxdimiin* personnel manager.

خ د ي و ي

خديوي *xideewi* <P *khidev*> **1** /n */ Khedive. **2** /adj */ pertaining to a Khedive.

خ ذ ل

see ² خ ز ل

¹ خ ر ا

خرا، خره *xara'* (also *xara sinnu*) <perh Copt> **1** /n/ children's ball game. **2** /interj/ call marking first serve of the game where the ball is served backwards over the head or shoulder.

² خ ر ا

see ¹ خ ر ى: *xara*[2]

¹ خ ر ب

خرب *xirib, xurub (a)* /vi/ **1** to be destroyed, be ruined. *bahayim-hum maatit wi-byut-hum xirbit* (their animals died and their houses fell to ruin) they were hit by total disaster. **2** to cease to function, go out of order. *ʕil-makana xirbit fagʕa* the machine suddenly conked out. *ʕil-ʕasanseer xarbaan* the lift is out of order. - vn *xaraab*; ava *xarbaan*.

خرب *xarab (i)* /vt/ to destroy, ruin. *fii ḥadd' yixrib beet-u b-ʕiid-u* would anyone deliberately bring ruin upon himself? ‖ *(ʕallaah) yixrib beet-ak* ≈ (God) damn you! (used as a curse but also to denote surprise or wonder). - *ʕallaah la yixrib-lak beet [beggars]* may God not destroy your home! - *(ʕallaah) yixrib ɛaql-ak* exclamation of affectionate amusement ≈ you're a riot!

what a devil you are! - *xarab-ha w-qaɛad ɛala tall-a-ha* he ruined it and sat (in satisfaction) on the mound of ruins. - *ʃasiib il-maxruub il-beet da* I'll leave this blasted house! - vn *xarabaan, xaraab*; ava *xaarib*; pva *maxruub*.

خراب *xaraab* /n/ destruction, ruin. ‖*ya xaraab-i* (also, euphemistically, *ya xaraaf-i*) exclamation of dismay or despair ≈ woe is me! ‖*moot wi-xaraab diyaar [prov]* death and destruction, complete devastation. - *xaraab malṭa* total destruction, the end of the world. *gayy' tqul-li baɛd' xaraab malṭa* is it now that you tell me (after it's too late)!

خرابة *xaraaba* /n pl *-aat, xaraayib*/ piece of waste ground. ‖*luu fi-kull' xaraaba ɛafriit [prov]* (he has a demon in every piece of waste ground) (1) he has friends everywhere, he has lots of influence. (2) he is very suspicious, he is full of fears.

خروبة *xaruuba* /n/ space between rails on a railway track.

اتخرب *ʃitxarab* /vi/ to be destroyed, be ruined. ‖*ʃitxarab geb-u* to go broke. - iva *mitxirib*.

خرّب *xarrab* /vt/ **1** to ruin, destroy. *ʃil-ɛiyaal xarrabu l-liɛab kull-a-ha* the kids have ruined all their toys. **2** to sabotage. - vn *taxriib*; ava/pva *mixarrab*.

اتخرّب *ʃitxarrab* /vi/ **1** to be ruined, be destroyed. **2** to be sabotaged. - iva *mitxarrab*.

خ ر ب ²

خرّوب *xarruub* /coll n/ carob(s). *ʃayyaam ʃaswad min qarn il-xarruub [prov]* days blacker than a carob pod.

خرّوبة *xarruuba* /n pl *-aat*/ unit of volume equal to one sixteenth of an *qadaḥ* or 0.129 litres.

خ ر ب ش

خربش *xarbiʃ* /vt/ **1** to scratch. *ʃil-quṭṭ' xarbiʃ-ni* the cat scratched me. **2** to scrawl, scribble. *xarbiʃ ʃimḍit-u* he scribbled his signature. — /vi/ **3** to scratch, be scratchy. *bi-ynaɛɛam il-xaʃab ɛaʃaan ma-yxarbiʃ-ʃ* he smooths the wood so that it won't scratch. - vn *xarbaʃa*; ava/pva *mixarbiʃ*.

مخربش *mixarbiʃ* /adj */ *[slang]* on-the-ball, aware and alert.

خربوش *xarbuuʃ* = *xarbuuʃa*.

خربوشة *xarbuuʃa* /n pl *xarabiiʃ*/ **1** scratch mark, claw mark. **2** scribble, scrawl.

اتخربش *ʃitxarbiʃ* /vi/ to be or become scratched. - ava/iva *mitxarbiʃ*.

خ ر ب ق

خربق *xarbaq* /vt/ to ruin, wreck, destroy. *ʃil-makana mxarbaqa xaaliṣ* the machine is completely wrecked. - vn *xarbaqa*; ava/pva *mixarbaq*.

اتخربق *ʃitxarbaq* /vi/ to be ruined, be wrecked, be destroyed. - iva *mitxarbaq*.

خ ر ت ى ت

خرتيت *xartiit* /n/ **1** /coll/ rhinoceros(es). **2** /pl *xaratiit*/ rhinoceros.

خ ر ج

خرج *xarag' (u)* /vi/ **1** to go out, leave. *ʃuxrug barra* get out! *ʃil-bitt' di ma-lhaa-ʃ xuruug mil-beet ʃabadan* this girl isn't allowed to leave the house ever. ‖ *ʃil-ḥikaaya xaragit min ʃiid-i* the matter passed out of my control. - *baṭn-u xaragit* he defecated. - *kalaam xaarig (ɛan ḥadd il-ʃadab)* improper, impolite or ill-mannered language or talk. - *ʃid-daxla wil-xarga* the ins and outs, the details, as in *laazim tiɛraf id-daxla wil-xarga* do you have to know the ins and outs of it all? **2** to project, jut out. - vn *xuruug*; ava *xaarig*.

¶ *xarag wara* to follow (a bier) to the cemetery, walk in the funeral procession of. - *xarag ɛan* to break with the authority of. *ʃibn-i xarag ɛan ṭooɛ-i* my son no longer obeys me. *xaarig ɛan il-qanuun* an outlaw. *xarag ɛan il-xaṭṭ* (1) to become derailed. (2) to deviate.

خرج *xarag² (i)* /vt/ **1** to put outside. *ʃixrig il-karaasi fil-balakoona* take the chairs out onto the balcony. **2** to extract (e.g., essences). - vn *xarg, xaragaan*; ava *mixrig*; pva *maxruug*.

خروج *xuruug* /vn/ exit. ‖*sifr il-xuruug* the Book of Exodus.

خروجة *xuruuga* /inst n, pl *-aat*/ an outing.

خرج *xarg* /n/ yield, essence, turnout, produce. ‖*xarg in-nagaf* drop-shaped glass or crystal beads. - *ɛaff' xarg' beet* second-hand furniture. - *sitt' xarg' beet* a second-rate woman.

خرجة *xarga* /n pl *-aat*/ **1** funeral procession. **2** protrusion, projection.

خارج *xaarig* **1** /prep/ **1a** on the outer surface of. *raakib xaarig il-makana* mounted on the outside of the machine. **1b** in the space surrounding. *waaqif xaarig il-murabbaɛ* standing outside the square. **2** *ʃil-xaarig* /n/ **2a** the outer surface, the exterior. *mitwassax min il-xaarig* soiled on the outside. **2b** the outside world, abroad. *ʃana msaafir il-xaarig* I'm going abroad.

الخارجة *ʃil-xarga* /prop n/ oasis in the Western Desert, situated between the Nile at Luxor and the Dakhla oasis.

خارجى *xaarigi* /adj */ **1** outer, external. *ʃil-ʃagnaab*

il-xaarigiyya the outer surfaces. *ʃizaaɛa xaarigiyya* outside broadcasting. *xaṭṭ[i] xaarigi* outside (telephone) line. ‖*mukalma xaarigiyya* overseas call. **2** pertaining to what is foreign. *ʃif-fuʃuun il-xaarigiyya* foreign affairs. *ɛilaqaat xaarigiyya* foreign relations.

الخارجيّة *ʃil-xaarigiyya* (also *wizaarit il-xaarigiyya*) /n/ the Ministry of Foreign Affairs. *waziir il-xaarigiyya* the Minister of Foreign Affairs.

خرج *xurg* /n pl *ʃaxraag*/ cloth saddlebag. *rakkibt-ak waraaya saraqt il-ɛeef mil-xurg [prov]* ≈ you bit the hand that fed you. ‖*raagil xurg* a useless, feckless or inept fellow. - *ɦaaga tfawwit il-ɛaṭṭaar xurg-u* ≈ a thoroughly exasperating matter.

خرّاج *xurraag* /n pl *xarariig*/ abscess.

خرّيج *xirriig, xarriig* /n */ graduate.

مخرج *maxrag* /n pl *maxaarig*/ **1** outlet, exit. *maxrag il-ɛaadim [mech]* exhaust outlet. **2** *[ling]* point of articulation.

خرّج *xarrag* /vt/ **1** to take out, let out, send out. *bint-i ma-txarrag-haa-ʃ mil-beet ʏeer lamma tgiib ʃabka* you won't be taking my daughter out of the house till you've brought an engagement present! *xarraguu-ni mil-mustaʃfa* they discharged me from hospital. *xarragt-a-ha min qalb-i* I drove her from my heart. *ʃana ɦ-axarrag-ik xuruuga ɦilwa yoom il-xamiis* I will take you for a nice outing on Thursday. **2** to (cause to) graduate. *ʃig-gamɛa xarragit kaam duktuur* how many doctors did the university graduate? - vn *taxriig*; ava/pva *mixarrag*.

تخريجة *taxriiga* /n pl *-aat*/ solution, way out, contrived justification.

اتخرّج *ʃitxarrag* /vi/ passive of *xarrag*. - vn *taxarrug*; ava *mitxarrag, mutaxarrig*↑.

تخرّج *taxarrug* /n/ graduation (from, e.g., a university). *ɦaflit taxarrug* graduation ceremony.

أخرج *ʃaxrag* /vt/ to direct (a play, film etc.). *miin ʃaxrag il-masraɦiyya* who directed the play? - vn *ʃixraag*; ava *muxrig*.

مخرج *muxrig* /n */ director (in cinema, theatre, radio etc.).

استخرج *ʃistaxrag, ʃistaxrig* /vt/ **1** to extract. *bi-yistaxragu l-fusfaat min il-manaagim* they extract phosphates from the mines. **2** to procure by application. *laazim tidfaɛ damva ɛaʃaan tistaxrag if-ʃihaada* you have to pay for a fiscal stamp before you can procure the certificate. - vn *ʃistixraag*; ava *mistaxrag*; pva *mustaxrag*.

مستخرج *mustaxrag* /n pl *-aat*/ copy of a document. *mustaxrag rasmi min ʃihaadit milaad* an official copy of a birth certificate.

خ ر خ ر

خرخر *xarxar* /vi/ to leak continuously, trickle. *ʃil-mayya xarxarit ṭuul is-sikka* the water leaked all along the way. - vn *xarxara*; ava *mixarxar*.

خ ر خ ش

خرخش *xarxif, xarxaʃ* **1** /vt/ to make hoarse. *ʃil-bard[i] xarxif ṣoot-i* the cold has made my voice hoarse. **2** /vi/ to wheeze, crackle, rattle. *bi-txarxif w-hiyya nayma* she wheezes when she's sleeping. *ʃir-radyu bi-yxarxif* the radio crackles. - vn *xarxaʃa*; ava *mixarxif*.

خ ر د

خردة *xurda* <P *khurda*> **1** /coll n/ scrap-metal. *taagir xurda* scrap-metal dealer. ‖*raagil xurda* a useless man. **2** /n/ *[obsol]* one-fortieth of a piastre. ‖*ma-ɦilt-uu-ʃ xurda* he's penniless.

خردوات *xirdawaat, xurdawaat, xardawaat* /pl n/ haberdashery, smallwares, notions.

خردواتي *xirdawaati, xurdawaati, xardawaati* /n pl *-yya*/ haberdasher, vendor of smallwares and notions.

خرّد *xarrad* /vt/ to gather (scrap). - vn *taxriid*; ava/pva *mixarrad*.

اتخرّد *ʃitxarrad* /vi/ to be gathered (of scrap). - iva *mitxarrad*.

خ ر د ق

خردق *xurduq* /coll n/ pellets (e.g., for an air-gun).

خردقة *xurduqa* /unit n, pl *-aat*/ a pellet.

خردقاية *xurduqaaya* = *xurduqa*.

خ ر د ل

خردل *xardal* /n/ mustard. /adjectivally/ lousy, rotten. *ɛiiʃa xardal* a rotten life.

خ ر ر

خرّ *xarr (u)* **1** /vi/ to leak. *ʃil-gardal bi-yxurr* the bucket leaks. ‖*ma-txurr[i]-ʃ min ʃiid-u l-mayya* (1) he's tight-fisted. (2) he's very precise. **2** /vt/ to leak out, allow to flow out. *ʃig-garɦ[i] bi-yxurr[i] damm* the wound is bleeding. ‖*xarr illi f-baṭn-u* he spilled the beans, he confessed to everything. - vn *xarr, xararaan, xariir*; ava *xaarir*.

خرير *xariir* /n/ purl, murmur, gurgle (of running water).

خرّارة *xarraara* /n pl *-aat*/ cesspool, drain. ‖*ruuɦ fi-xarraara* to hell with you!

خ ر ز [1]

خرز *xaraz, xaraz[1] (i, u)* /vt/ to pierce, bore. - vn *xarz*;

ava *xaariz*; pva *maxruuz*.

خرز *xaraz*[2] /coll n/ bead(s). ‖*xaraz il-baqar* gall bladders of cows. *marabbit xaraz il-baqar* a preparation supposed to have fattening properties.

خرزة *xaraza* /n/ **1** /unit n, pl *-aat, -aat*/ a bead. **2** /pl *xaraz*/ squared-off back end of a *faas* (q.v.).

مخراز *muxraaz* /n pl *maxariiz*/ awl.

مخارز *maxaariz* /pl n/ secret ways, tricks, devious behaviour. *ma-ħadd'-ʃ yiʕraf maxarz-ak ʃilla ʃana* I'm the only one who knows all your ins and outs.

اتخرز *ʃitxaraz* /vi/ to be pierced, be bored. - iva *mitxiriz*.

انخرز *ʃinxaraz* = *ʃitxaraz*. - iva *minxiriz*.

خرّز *xarraz*[1] /vt/ to pierce in a number of places. - vn *taxriiz*; ava/pva *mixarraz*.

مخرّز *mixarraz* /n pl *-aat*/ bar made up of connected pieces of wood (in *mafrafiyya* work, see Pl.G, 6).

اتخرّز *ʃitxarraz*[1] /vi/ to be pierced in a number of places. - iva *mitxarraz*.

خ ر ز[2]

خرّز *xarraz*[2] /vt/ *[naut]* to splice (rope). - vn *taxriiz*; ava/pva *mixarriz*.

تخريزة *taxriiza* /n pl *taxariiz*/ *[naut]* splice.

اتخرّز *ʃitxarraz*[2] /vi/ to be spliced (of rope). - iva *mitxarraz*.

خ ر ز ا ن

خرزان *xarazaan* /coll n/ bamboo, cane. ‖*kursi xarazaan* cane chair or straight-backed wooden chair after the pattern of a cane chair. - also *xazaraan*.

خرزانة *xarazaana* /unit n, pl *-aat*/ a piece of cane, a cane. *ḍarab-ha b-xarazaana* he beat her with a cane. - also *xazaraana*.

خ ر س

خرس *xiris, xurus (a)* /vi/ **1** to shut up, fall silent. *ʃixras* shut up! **2** to become dumb. - vn *xars, xaras*; pva *maxruus*.

خرس *xaras (i)* /vt/ to silence, shut (s.o.) up.

أخرس *ʃaxras* /adj, fem *xarsa*, pl *xurs*/ dumb. *ʃumm il-ʃaxras tiʕraf luʕat ibn-a-ha [prov]* (the dumb man's mother knows her son's speech) familiarity teaches understanding. *xadu gooz il-xarsa ʃitkallimit [prov]* (they took the dumb woman's husband (and) she spoke) ≈ a drowning man will learn to swim. ‖*ʃarḍ' xarsa* non-porous soil unfit for cultivation.

اتخرس *ʃitxaras* /vi/ to become dumb, become silent. *ʃir-radyu txaras leeh* why has the radio gone dead? - ava *mitxiris*.

انخرس *ʃinxaras* = *ʃitxaras*. - ava *minxiris*.

خرّس *xarras* /vt/ to shut (s.o. or s.th.) up, quieten, silence. *xarras ir-radyu* shut the radio off! - vn *taxriis*; ava/pva *mixarras*.

اتخرّس *ʃitxarras* /vi/ to be silenced. - iva *mitxarras*.

خ ر س ا ن

خرسانة *xarasaana* <T *ḥorasan*> /n/ concrete.

خرساني *xarasaani* /adj */ made of concrete.

خ ر س ي س

خرسيس *xarsiis* (also *xarsiis marsiis*) <T *ḥırsız*> /adj/ good-for-nothing.

خ ر ش see خ ر ب : *xaraaf*

خ ر ش ف

خرسوف *xarʃuuf* /coll n/ globe artichoke(s).

خرشوفة *xarʃuufa* /unit n, pl *-aat*/ an artichoke.

خرسوفاية *xarʃufaaya* = *xarʃuufa*.

خ ر ش م

خرشم *xarʃim* /vt/ to give (s.o.) a severe beating (especially about the head and face). *ʃiliʕ ginaan-u w-xarʃim-ha* he went crazy and beat her face to pulp. - vn *xarʃama*; ava/pva *mixarʃim*.

اتخرشم *ʃitxarʃim* /vi/ to be beaten severely (especially about the head and face). - iva *mitxarʃim*.

خ ر ص ي ن

خارصين *xarṣiin* /n/ zinc.

خارصيني *xarṣiini* = *xarṣiin*.

خ ر ط[1]

خرط *xaraṭ (u)* /vt/ **1** to chop, cut up (vegetables, herbs). **2** to lathe, turn on a lathe. ‖*xaraṭ-u l-xarraaṭ wi-nqalab maat* (the turner turned it and fell down dead) it has no like, it cannot be reproduced. — /vi/ **3** to allow colouring, flavour, etc. to seep out. *ma-tiʕsil-uu-ʃ fi-mayya suxna laħsan yuxruṭ* don't wash it in hot water in case it runs. *xalli ʃ-ʃaay yuxruṭ* leave the tea to brew. **4** to tell lies, tell tales. *ṭuul ʕumr-u yixruṭ fik-kalaam* he's always telling lies. *nazla tixruṭ fi-siirit ġiran-ha* she's gossiping away about her neighbours. - vn *xarṭ*; ava *xaariṭ*; pva *maxruuṭ*.

خرطة *xarṭa*[1] /n pl *-aat, xuraṭ*/ slice, chopped-off piece.

مخروط *maxruuṭ* /n pl *maxariiṭ*/ *[geom]* cone.

مخروطة *maxruuṭa* /n/ *[rur]* type of home-made noodle (usually eaten with milk and sugar).

مخروطي *maxruuṭi* /adj/ *[geom]* conical.
خراطة *xiraaṭa* /n/ lathing, turning.
خرّاط *xarraaṭ* /n */ **1** lathe operator, turner. ‖*bukra xarraaṭ il-banaat yixruṭ-ha* one day God who shapes the girls will make her shapely and pretty. **2** one who chops dough into lengths (in a bakery). **3** liar, slanderer.
مخرطة *maxraṭa* /n pl *maxaariṭ'*/ **1** lathe. **2** mincing knife (see Pl.B, 1).
اتخرط *ʔitxaraṭ* /vi/ **1** to be chopped, be cut up (of vegetables, herbs). **2** to be lathed, be turned on a lathe. - iva *mitxiriṭ*.
انخرط *ʔinxaraṭ* = *ʔitxaraṭ*. - iva *minxiriṭ*.
خرّط *xarraṭ* /vt/ **1** to chop finely, mince (vegetables, herbs). ‖*xarraṭuu lil-wizz* (they've chopped him up for the geese) he's disappeared, he's not around these days. **2** to chop into lengths. *ṣabbaɛit il-ɛagiina w-xarraṭit-ha bis-sikkiina* she formed the dough into fingers and chopped them into lengths with the knife. - vn *taxriiṭ*; ava/pva *mixarraṭ*.
اتخرّط *ʔitxarraṭ* /vi/ **1** to be chopped finely, be minced. **2** to be chopped into lengths. - iva *mitxarraṭ*.

خ ر ط [2]

خارطة *xarṭa*[2] /n pl *xuraṭ*/ map, chart.
خريطة *xariiṭa* /n pl *xaraayiṭ*/ map, chart.

خ ر ط م

خرطوم *xarṭuum* /n pl *xaraṭiim*/ **1** hose, flexible tube. ‖*xarṭuum fiil* elephant's trunk. **2** *[coarse]* penis, dick.
خرطم *xarṭam* /vi/ to set one's heart, mind or eyes (on s.th.), have designs (on s.th.). *ʔatarii mxarṭam ɛal-bint' wala ḥadd'-ʃ ɛaarif* it turned out that he had set his heart on the girl without anyone realizing. - vn *xarṭama*; ava *mixarṭam*.

خ ر ط و ش

خرطوش *xarṭuuf* <perh Fr *cartouche*> /coll n/ cartridge(s).
خرطوشة *xarṭuuʃa* **1** /unit n, pl *-aat, xaraṭiiʃ*/ a cartridge. **2** /n pl *xaraṭiiʃ*/ carton (of 200 cigarettes).

خ ر ع [1]

اخترع *ʔixtaraɛ* /vt/ to invent. *ʔixtaraɛit liɛba gdiida* she invented a new game. - vn *ʔixtiraaɛ*; ava *mixtiriɛ*.
اختراع *ʔixtiraaɛ* /n pl *-aat*/ invention.

خ ر ع [2]

خرع *xaraɛ (i)* /vt/ **1** to trouble, annoy, upset, bother. *ʔil-wad-da xaraɛ-ni mil-ɛiyaaṭ* this boy has driven me up the wall with his crying. **2** to frighten, shock. - vn *xaraɛaan*; ava *xaariɛ*; pva *maxruuɛ*.
خرعة *xarɛa* /n/ **1** bother. **2** shock.
خرع *xiriɛ* /adj */ spineless, wishy-washy.
خراعة *xaraaɛa* /n/ spinelessness, wishy-washiness.
اتخرع *ʔitxaraɛ* /vi/ **1** to be troubled, be bothered, be made tired. **2** to be frightened. - iva *mitxiriɛ*.
انخرع *ʔinxaraɛ* = *ʔitxaraɛ*. - iva *minxiriɛ*.

خ ر ف [1]

خرفان *xarfaan* /adj */ raving, incoherent (especially from hunger). *hiyya xarfaana mig-guuɛ* she's so hungry she's raving.
خرافة *xuraafa* or *xuraafa* /n pl *-aat, -aat/* **1a** superstition. **1b** legend, fable. **2** *[slang]* something fantastic, something fabulous.
خرافي *xuraafi* /adj/ **1** legendary. *ḥayawaan xuraafi* a legendary beast. **2** incredible, fantastic, marvelous. *film' xuraafi* a fantastic film.
خرّف *xarraf* /vi/ to become feeble-minded. *fii riggaala lamma yikbaru yxarrafu* there are men who lose their wits when they grow old. *bi-txarraf bi-tquul ʔeeh* what are you raving about? ‖ *ʔis-saaɛa bi-txarraf* ≈ the watch is running on cart-wheels. - vn *taxriif*; ava *mixarraf, muxarrif*[1].
تخريف *taxriif* /n pl *taxariif*/ raving, nonsensical talk. ‖*taxariif ramaḍaan* the nonsense supposedly talked by those fasting in Ramadan.

خ ر ف [2]

خريف *xariif* /n/ autumn, fall. *xariif il-ɛumr* old age.
خريفة *xariifa* /n/ **1** *ʔil-xariifa* the cool northern breeze that blows intermittently during the summer. **2** cool weather (during the summer). *ʔid-dinya baqit xariifa* a cool spell has come.
خريفي *xariifi* /adj */ autumnal.
خرّف *xarrif* /vi/ to turn cool (of the weather in summer). *ʔid-dinya b-tiigi l-bil-leel wi-txarrif* night comes and it gets cooler.

خ ر ف [3]

خروف *xaruuf* /n/ **1** /pl *xirfaan*/ ram, (loosely) sheep. *farwit xaruuf* sheep-skin. **2** man who has no say in the morals of his family.

خ ر ف ش

خرفش *xarfiʃ* /vi/ **1** to make a sound of scratching, rustling or crackling. *ʔil-faar bi-yxarfiʃ fid-durg* the mouse is scrabbling in the drawer. *ʔir-radyu bi-yxarfiʃ* the radio is crackling. ‖*ɛaql-u mxarfiʃ* he's crazy. **2** to be-

come rough, uneven or coarse. *saṭḥ iṭ-ṭarabeeza mxarfiʃ* the table top is rough. - vn *xarfaʃa*; ava *mixarfiʃ*.
خرفشة *xarfaʃa* /n/ roughness of finish. *ʃil-xaʃab laazim yikuun niḍiif wi-xaali min il-xarfaʃa* the wood must be clean and free of roughness.

خ ر ق
خرق *xaraq (a)* /vt/ **1** to pierce or bore (a hole) through. ‖ *geeb-u maxruuq* or *ʃiid-u maxruuqa* he's a spendthrift. **2** to deflower (a virgin). - vn *xarq, xaraqaan*; ava *xaariq*; pva *maxruuq*.
خارق *xaariqˆ* /adj */ extraordinary.
خوارق *xawaariqˆ, xawaariqˆ* /pl n/ miracles, marvels, wonders.
مخروقة *maxruuqa* /n/ *[butcher]* rump.
خرقة *xirqa* /n pl *xiraq*/ **1** rag, scrap of cloth. **2** Sufi attire.
اتخرق *ʃitxaraq* /vi/ **1** to be pierced. **2** to be deflowered (of a virgin). - iva *mitxiriq*.
انخرق *ʃinxaraq* = *ʃitxaraq*. - iva *minxiriq*.
خرّق *xarraq* /vt/ to pierce repeatedly, make several holes in. *fustaan mixarraq mil-ɛitta* a moth-eaten dress. - vn *taxriiq*; ava/pva *mixarraq*.
اخترق *ʃixtaraq* /vt/ **1** to penetrate. *ʃiṭ-ṭayyaara xtaraqit ḥaagiz iṣ-ṣoot* the aeroplane broke the sound barrier. **2** to traverse, cross. ‖ *ʃixtiraaq iḍ-ḍaḥya* cross-country racing. - vn *ʃixtiraaq*; ava *mixtiriq*.

[1] خ ر م
خرم *xaram (u)* **1** /vt/ to make a hole in. *ʃir-ruṣaaṣa xaramit il-ḥeeṭ* the bullet pierced the wall. *xaram il-ḥeeṭa ɛaʃaan yibuṣṣ[a] ɛalayya* he made a hole in the wall to peep at me. *ṭablit widn-u maxruuma* his eardrum is perforated. ‖ *geeb-u maxruum* or *ʃiid-u maxruuma* he is a spendthrift. **2** /vi/ to wander off the point. - vn *xarm*; ava *xaarim*; pva *maxruum*.
خرم *xurm* /n pl *xuruum, xiraam*/ hole, opening. *xurm' ʃibra* eye of a needle.
خرمة *xurma* /n pl *-aat*/ a small hole.
خرّامة *xarraama* /n pl *-aat*/ **1** paper punch. **2** *[naut]* pricker for making holes in sailcloth.
خرّامى *xarraami* /adv/ in a straight line, directly.
اتخرم *ʃitxaram* /vi/ to be punctured, be pierced with a single hole. - iva *mitxirim*.
انخرم *ʃinxaram* = *ʃitxaram*. - iva *minxirim*.
خرّم *xarram* /vt/ **1** to make holes in, perforate. *yixarram widaan il-banaat ɛaʃaan il-ḥalaq* he pierces the girls' ears for earrings. — /vi/ **2** to take a short cut. *mumkin tixarram min wara g-gamɛa* you can take a short cut behind the university. ‖ *xarram fik-kalaam* to speak improperly. **3** to be overspent (of a budget). *ʃil-mizaniyya xarramit maɛaaya* I have overspent my budget. - vn *taxriim*; ava/pva *mixarram*.
تخريمة *taxriima* /n pl *-aat, taxariim*/ **1** instance noun of *taxriim*. **2** short cut.
اتخرّم *ʃitxarram* /vi/ to be perforated. - iva *mitxarram*.

[2] خ ر م
خرمان *xarmaan* /adj */ craving, longing. *ʃana xarmaan ɛala sgaara* I'm dying for a cigarette.

[1] خ ر و ع
خروع *xarwaɛ[1]* /coll n/ castor oil plant(s). *zeet xarwaɛ* castor oil.

[2] خ ر و ع see also [2] خ ر ع
خروع *xarwaɛ[2]* **1** /vi/ to become feeble, become physically weak and helpless. *ʃir-raagil xarwaɛ min qillit il-ʃakl* the man became weak from lack of food. **2** /vt/ to weaken, exhaust, enfeeble. *ʃis-sahar mixarwaɛ-ni* staying up late has worn me out. - vn *xarwaɛa*; ava/pva *mixarwaɛ*.

[1] خ ر ى
خرى *xiri (i)* /vt and vi/ *[coarse]* to defecate, shit. *ẓarraṭ il-ʃimaam xiryu l-muṣalliin [prov]* (the imam farted so those praying shitted) ≈ the error of a leader is compounded by his followers. - vn *xara*; ava *xaari*.
خرى *xara[2]* /coll n/ *[coarse]* faeces, shit. ‖ *ʃil-xara baqaa-lu mara yiḥlif ɛaleeha biṭ-ṭalaaq [prov]* even the lowest of the low have acquired rights which they can abuse, look what the world has come to! - /adjectivally/ *ʃil-ʃayyaam il-xara faydit-ha nom-ha [prov]* the only good thing you get from lousy times is the sleep you have during them.
خرية *xarya* /unit n, pl *-aat/ [coarse]* a turd.
خرّى *xarra* /vt/ *[coarse]* **1** to make (s.o.) defecate. *ʃilli yxarrii zayy illi yqarrii* (or *yiwaḍḍii) [prov]* ≈ he doesn't know chalk from cheese. **2** to give (s.o.) a hard time. - ava/pva *mixarri*.
اتخرّى *ʃitxarra* /vi/ passive of *xarra*. - iva *mitxarri*.

[2] خ ر ى
خريّة *xariyya* /n pl *xaraaya*/ fine small gold or gold-plated disc (e.g., on necklaces and bracelets).

خ ر ى ط
خريط *xaryaṭ* /vt/ **1** to exhaust, drain of strength. *kutr iʃ-ʃuɣl' xaryaṭ-ni* I'm worn out from so much work. — /vi/ **2** to become exhausted. *ʃana xaryaṭ* I'm

finished! **3** to do badly, fail hopelessly (e.g., in an exam). - vn *xaryaṭa*; ava/pva *mixaryaṭ*.
اتخريط ʔitxaryaṭ /vi/ to be or become exhausted. - ava/iva *mitxaryaṭ*.

خ ز ا م
خزام *xuzaam*[1] *[bot]* hyacinth.

خ ز ر ا ن
خزران *xazaraan* /coll n/ bamboo, cane. ‖*kursi xazaraan* cane chair or straight-backed wooden chair made after the pattern of a cane chair. - also *xarazaan*.
خزرانة *xazaraana* /unit n, pl *-aat*/ a bamboo cane. - also *xarazaana*.

خ ز ع ب ل
خزعبلات *xuzaɛbalaat* /pl n/ superstitions.

خ ز ف
خزف *xazaf*↑ /n/ pottery, ceramic work.
خزفى *xazafi*↑ /adj/ ceramic.
خزّاف *xazzaaf*↑ /n */ potter, ceramist.
خزّف *xazzif*↑ /vt and vi/ to pot, work in ceramics. - vn *taxziif*; ava/pva *mixazzif*.

خ ز ق
خزق *xazaq (u)* /vt/ to pierce, make a hole in. - vn *xazq*; ava *xaaziq*; pva *maxzuuq*.
خازوق *xazuuq* /n pl *xawaziiq*/ **1** impaling spike. **2** dirty trick, doublecross. **3** *[carp]* wooden peg or pin. **4** *[constr]* **4a** a pile. **4b** pile-driver. see further under خ و ز ق
اتخزق ʔitxazaq /vi/ to be pierced. - iva *mitxiziq*.
خزّق *xazzaq* /vt/ to impale, drive a peg or stake into. *law ma-skitt*[i]*-f ḥ-axazzaq ɛenee-k* if you don't shut up I'll put your eyes out! - vn *taxziiq*; ava/pva *mixazzaq*.
اتخزّق ʔitxazzaq /vi/ to be impaled or pierced. - iva *mitxazzaq*.

خ ز ل [1]
اختزل ʔixtazal /vt/ *[chem]* to reduce. - vn *ʔixtizaal*; ava *muxtazil*.
اختزال ʔixtizaal /n/ shorthand.
اختزالى ʔixtizaali /adj/ *[chem]* pertaining to reduction. *mawaadd ixtizaliyya* reduction agents.

خ ز ل [2]
خذل *xazal (i)* /vt/ to let down, disappoint. *xazal-ni waqt if-fidda* he left me in the lurch in time of need. - vn *xizlaan*; ava *xaazil*; pva *maxzuul*.
انخذل ʔinxazal /vi/ to be disappointed, be left in the lurch. - iva *minxizil*.
اتخذل ʔitxazal = ʔinxazal. - iva *mitxizil*.

خ ز م [1]
خزم *xazam (i)* /vt/ to pierce (the nose, particularly of an animal). - vn *xazm*; ava *xaazim*; pva *maxzuum*.
خزام *xuzaam*[2], *xizaam* /n/ **1** /pl *-aat*/ nose ring. ‖*xizaam-u liif* he is kept on a tight leash. **2** /pl *xizíma*/ seton.
اتخزم ʔitxazam /vi/ to be pierced (of the nose, particularly of an animal). - iva *mitxizim*.

خ ز م [2] see خ ز ا م : *xuzaam*[1]

خ ز ن
خزن *xazan (i)* /vt/ to store. *bi-nixzin il-quṭn*[i] *l-ɣaayit ma l-ḥukuuma tiftirii* we store the cotton till the government buys it. *lift*[i] *btaaɛ il-xaziin [vendor's cry]* turnips for storage (fit to be kept - not too ripe). - vn *xazn, xaziin*; ava *xaazin*; pva *maxzuun*.
خزين *xaziin* /n/ **1** /coll n/ household provisions. **2** pantry, cupboard.
خزينة *xaziina* /n pl *xazaayin*/ = *xazna*.
خزنة *xazna* /n pl *xizan*/ **1a** cash window, cash desk, cashier's office. **1b** safe, coffer. **2** *[mech]* seating.
خزانة *xazaana* /n pl *-aat*/ **1** pantry, cupboard. **2** *[obsol]* treasury. ‖*wizaarit il-xazaana* the Treasury.
خزّان *xazzaan* /n pl *-aat*/ **1** storage tank. **2** reservoir. **3** dam, barrage.
مخزن *maxzan* /n pl *maxaazin*/ warehouse, storehouse, storage place, depot. *maxzan ɣalla* wheat granary (see Pl.C, 4). *ʔamiin maxzan* stock clerk. *maxzan butagaaz* butane gas depot.
مخزنجى *maxzangi* /n pl *-yya*/ store-keeper.
خزّن *xazzin* **1** /vt/ **1a** to store, store up. *bi-nxazzin il-ʔakl*[a] *ɛalaʃaan il-ɛiid* we store up food for the feast. **1b** to place in a store or depot. *ʔana mxazzin il-ʔutubiis il-fagr* I took the bus back to the depot at dawn. **2** /vi/ to harbour resentment. *ʔig-gamal mixazzin-lu* the camel is bearing him a grudge. - vn *taxziin*; ava/pva *mixazzin*.
اتخزّن ʔitxazzin /vi/ **1** to be stored up. **2** to be placed in a store or depot. - iva *mitxazzin*.
اختزن ʔixtazan /vt/ to store up. *ʔin-naml*[i] *b-yixtizin is-sukkar* the ants store away the sugar. - ava *mixtizin*.

خ ز ى
خزى *xizi*↓ *(a)* /vi/ to become bashful, shy, embarrassed or ashamed. - ava *xazyaan*.

خزى *xaza (ı)* /vt/ **1** to spite (the Devil or the evil eye). *ma-tiḍrab-uu-ʃ - ʕixzi f-fiṭaan* don't hit him - spite the Devil (i.e., resist the temptation to hit him). *ʕallahumma xzıı-k* (i.e. *yixzıı-k) ya ʃṭaan* ≈ get thee behind me, Satan! *ʕana ḥaẓẓ-ı kaan haayil in-nahar-da - huss - ʕixzı l-ɛeen* 'My luck was fantastic today.' 'Shush - don't tempt the evil eye!' **2** to put to shame. *da xazaa-na b-taṣarrufaat-u* he embarrassed us with his behaviour. - vn *xiza*; ava *xaazi*; pva *maxzi*.

خزية *xazya* /inst n, pl *-aat*/ a shame, a disgrace.

مخزى *muxzi↑* /adj */ shameful, disgraceful.

خ س ت ك

خستك *xastik (i)* <perh P *khastagî*> **1** /vi/ to become weak, out of sorts, tired or exhausted. *xastıkt' min kutr is-sahar* I am worn out from staying up late so often. *ʕil-makana xastikıt* the engine got tired. **2** /vt/ to weaken, exhaust. *kutr if-fuɤl' xastik-ni* so much work has exhausted me. - vn *xastaka*; ava/pva *mixastik*.

خ س ر

خسر *xisir, xusur (a)* /vt/ **1** to forfeit, lose, let slip. *ḥa-nixsar if-faqqa wil-beet kull-u b-sabab ʕihmaal-ak* we'll lose the flat and the house altogether because of your negligence. *xisirt' ṣḥubiyyit-u* I lost his friendship. *xisirt' fluus-u* I lost his money (through unprofitable dealing). *ṭiliɛt' min if-fuɤla xasraan* I came out of the deal worse off than I was before. **2** to lose, fail to win. *ḥa-yixsaru l-matʃ* they're going to lose the match. ‖*ya faaṭir ramaḍaan ya xaasir dıın-ak* (children's chant) you breaker of Ramadan's fast, you profaner of your religion. — /vi/ **3** to spoil, become spoiled. *ʕil-laban xisir* the milk has gone bad. **4** to break down, cease to function. *saɛt-i xasraana* my watch is out of order. **5** to fall (morally), go to the dogs. *ʕil-walad xisir* the boy became a bad lot. *mara xasraana* a fallen woman. - vn *xusaara*; ava *xaasir, xasraan*.

خسارة *xusaara* /n pl *xasaayir*/ loss, waste, pity. *ʕik-kıtaab da xusaara fii* this book is wasted on him. *xusaara tirmıı-ha* it would be a pity to throw it away. *xasaayır fil-mabiɛaat* losses on sales. *xasaayir fil-ʕarwaaḥ↑* fatalities. ‖*ya xsaara* what a pity! too bad!

خسّر *xassar* /vt/ **1** to cause to lose. *ʕil-ɋumaar xassar-u fluus-u* gambling made him lose his money. **2** to spoil, wreck, ruin. *ʕıl-waqɛa xassarit il-minabbih* the fall ruined the alarm clock. *xassar il-bint* (1) he ruined the girl's morals. (2) he had sexual intercourse with the girl. - vn *taxsiir*; ava *mıxassar*.

اتخسّر *ʕitxassar* /vi/ passive of *xassar*. - iva *mitxassar*.

استخسر *ʕistaxsar* /vt/ **1** to consider too good to waste. *bi-yistaxsaru zibl il-ḥamaam ɛaʃaan yiqdaru ybiɛuu* they consider it a waste to throw away the pigeon droppings since they can sell them. ‖*b-astaxsar fii ʃarbit ıl-mayya* ≈ I don't think he's worth a brass farthing. **2** /preverb/ to consider it a waste (to do s.th.). *ʕana mistaxsar armii-ha* I can't bring myself to throw it away. *b-astaxsar ʕakallim-u* I wouldn't waste my breath on him. - vn *ʕıstıxsaar*; ava *mistaxsar*.

خ س ر و -

خسروان *xasrawaan* <perh P *khusrawânı*> /adv/ sidesaddle.

خ س س ¹

خسّ *xass (i)* /vi/ **1a** to shrink. *ʕil-ɋumaaf xass' fil-ɤasiil* the cloth shrank in the wash. *ʕıl-fluus xassit* the money ran low. **1b** to lose weight. *ɛamalt' rjiim ɛaʃaan ʕaxiss* I went on a diet to lose weight. **2** to be missing, be lacking. *ʕeeh ılli ḥa-yxiss" ɛaleehum law iḥtafalu min ɤeer mıkrufoon* what are they going to lose, if they celebrate without a loudspeaker? - vn *xasasaan, xissiyya*; ava *xaasıs*.

خسّيّة *xissiyya* /n/ shrinkage, weight-loss.

خسّس *xassis* /vt/ **1** to cause to shrink. **2** to cause to lose weight. - vn *taxsiis*; ava *mixassıs*.

انخسّس *ʕitxassis* /vi/ **1** to be caused to shrink. **2** to be caused to lose weight. - iva *mıtxassis*.

استخسّ *ʕistaxass* /vt/ **1** to find shrunk or diminished. *ʕistaxassit is-sukkar ɋaamit tahamit ıf-faɤɤaala* she found the sugar had diminished so she accused the servant. **2** to consider (too) little. *ʕistaxass il-ʕugra* he considered the wage too little. - ava *mıstixiss*.

خ س س ²

خسّة *xıssa* /n/ meanness, baseness. *xissit ıl-ʕaṣl* meanness of character.

أخسّ *ʕaxass* /el/ **1** more/most mean or base. **2** more/most miserly.

خساسة *xasaasa* /n/ meanness, baseness. *xasaasıt ıṭ-ṭabɛ* meanness of character.

خسيس *xasiis* /adj * and pl *xusasa*/ **1** mean, vile, base. **2** miserly.

خ س ع

خسع *xassaɛ* /vi/ **1** to run out, become used up. *ʕil-xaʃab xassaɛ maɛaaya* I ran out of wood. **2** to become debilitated, break down (usually from old age). *ɛarabiyyit-i bi-txassaɛ maɛaaya ktiir* my car breaks

down on me a lot. — **3** /vt/ to weaken, debilitate. *kutr if-fuxl^{i} mxassaɛ-ni* too much work has worn me out. - vn *taxsiiɛ*; ava/pva *mixassaɛ*.

خ س ف

خسف *xasaf (i)* /vt/ **1** to eclipse. **2** to consume utterly, annihilate. ‖*xasaf biyya l-ʕarḍ* he finished me off. - *ya maxsuuf ir-raqaba* you wretch! - vn *xasf, xasafaan*; ava *xaasif*; pva *maxsuuf*.

خسوف *xusuuf* /n/ eclipse. *xusuuf kulli* total eclipse.

انخسف *ʕitxasaf* /vi/ **1** to be eclipsed. **2** to be annihilated. - iva *mitxisif*.

انخسف *ʕinxasaf* = *ʕitxasaf*. - iva *minxisif*.

خ ش ا ف

خشاف *xufaaf, xafaaf* <T *ḫoṣaf* from P> /n/ dish of dried or fresh fruits macerated or stewed in sugar syrup.

خ ش ب

خشب *xaʃab* /coll n, pl *ʕaxʃaab*/ wood, timber.

خشبة *xaʃaba* /unit n, pl *-aat*/ **1** a length of wood, a stick. *bi-yzuqq iṭ-ṭooq quddaamu b-xaʃaba* he propels the hoop before him with a stick. *faaṭ fooq il-xaʃaba* he shot (the ball) over the top strut (of the goal). ‖*xaʃabit il-masraḥ* stage. - *ʕit-talat xaʃabaat [soccer]* the goal. **2a** *[Isl]* wooden bier on which a corpse is carried to the grave. **2b** *[Chr]* coffin.

خشبي *xaʃabi* /adj */ made of wood. ‖ *ʕalaat xaʃabiyya* woodwind instruments.

خشّاب *xaʃʃaab* /n * and pl *xaʃʃaaba*/ *[constr]* scaffolding erector.

خشّابي *xaʃʃaabi* /adj invar/ **1** pertaining to wood. *mabrad xaʃʃaabi* carpenter's file. *qalam xaʃʃaabi* draughtsman's pencil, hard lead pencil. ‖*sitt^{a} ɛaḍm-a-ha xaʃʃaabi* a big woman. **2** woody in texture. *kummitra xaʃʃaabi* a variety of hard pear.

خشّب *xaʃʃib* **1** /vt/ to timber, lay with timbers. **2** /vi/ to stiffen, become rigid. *gism-u xaʃʃib lamma simiɛ ik-kalaam da* his body stiffened when he heard those words. - vn *taxʃiib*; ava/pva *mixaʃʃib*.

تخشيبة *taxʃiiba* /n pl *-aat, taxaʃiib*/ **1** police-station detention cell. *ḥa-tbaat fit-taxʃiiba* you'll spend the night in the lock-up. **2** shed, hut.

خ ش ت

خشت *xiʃt* <P *khisht*> /n pl *xuʃuut*/ lance, spear.

خ ش خ ش [1]

خشخش *xaʃxiʃ* /vi/ to make a crackling or rattling sound. *da ɛandu kuḥḥa w-sidr-u bi-yxaʃxiʃ qawi* he has a cough and his chest rattles badly. *ʕusṭuwaana fiiha xaʃxaʃa* a crackly record. - vn *xaʃxaʃa*; ava *mixaʃxiʃ*.

خ ش خ ش [2]

خشخاش *xuʃxaaʃ* /coll n/ poppies. *zeet il-xuʃxaaʃ* poppy-seed oil.

خشخاشة *xuʃxaaʃa* /unit n, pl *-aat*/ a poppy.

خ ش ر م

خشرم *xaʃrim* /vt/ to wreck, smash, bash, ruin. *ɛamal ḥadsa w-xaʃrim nafs-u* he was involved in an accident and got badly injured. - vn *xaʃrama*; ava/pva *miraʃram*.

اتخشرم *ʕitxaʃrim* /vi/ to be wrecked, smashed, or ruined. - iva *mitxaʃrim*.

خ ش ش

خش *xaʃʃ (u)* /vt/ **1** to go or come into, enter. *xaʃʃeet il-beet* I entered the house. *xaʃʃ ig-geef* he went into the army. — /vi/ **2** to go or come in, enter. *xabbaṭ ɛal-baab qabl^{i} ma txuʃʃ* knock on the door before you go in! *ʕil-leel xaʃʃ* night came. *ma-bi-yxuʃʃ^{i}-ʃ fiṣ-ṣanf^{i} da* it is not of that type, it doesn't come under that heading. *xaʃʃeet ɛaleehum* I went in to them. *xaʃʃ^{i} ɛak-koora* he went in after the ball. *xuʃʃ^{i} ya-sṭa lissa fii wasaɛ* move up, driver, there's still plenty of space! *xaʃʃ^{i} fil-mawḍuuɛ* to get into the subject. ‖*xuʃʃ^{i} ymiin* turn right! *xaʃʃ^{i} f-muxx-u ʕinn* ... he got the idea that ..., as in *xaʃʃ^{i} f-muxx-u ʕinn ik-kalaam da ɛalee* he got the impression that this talk was about him. - *ma-xaʃʃ^{i}-ʃ fi-muxx(-u)* (1) to be unbelievable to (s.o.), as in *da kalaam ma-yxuʃʃ^{i}-ʃ fi-muxx^{i} ḥadd* no-one could believe such a thing. (2) to be unappealing to (s.o.), as in *da laḥn^{i} ma-yxuʃʃ^{i}-ʃ fil-muxx* that tune has no appeal. **3** to consummate a marriage, begin married life. *miʃ ḥa-nxuʃʃ^{i} veer ma yikmal ig-gihaaz* we shan't get married before we have a completely furnished home. ‖*bi-yxuʃʃ^{a} ɛal-ɛaruusa leelit id-duxla* he has intercourse with the bride on the wedding night. - vn *xaʃaʃaan*; ava *xaaʃiʃ*.

¶ *xaʃʃ^{i} fi-* (1) to collide with, crash in to, as in *ʕil-ɛarabiyya xaʃʃit fi-ʃagara* the car crashed into a tree. (2) to fit on, as in *ʕil-xaatim bi-yxuʃʃ^{i} f-ṣubaaɛ-u* the ring goes onto his finger, *ʕil-banṭaloon ma-bi-yxuʃʃ^{i}-ʃ fiyya* the trousers are too tight for me. - *xaʃʃ^{a} ɛala* to take in, deceive, as in *law kunna mvaffaliin kaan yixuʃʃ^{a} ɛaleena k-kalaam da* if we were gullible we would have been taken in by that.

يتخش *yitxaʃʃ* /vi imperf only/ to be fit to be entered. *beet il-kariim yitxaʃʃ* ≈ it is nice to visit a generous man.

da makaan ma-yitxaff'-ſ min wasaxt-u it's such a dirty place that it's not fit to be entered! - iva *mitxaff.*

انخشّ *ʔinxaff* = *ʔitxaff.* - iva *minxaff.*

خشّش *xaffif* /vt/ to cause to enter. *xaffif-hum iṣ-ṣaala ʕala ṭuul* take them straight into the hall! - vn *taxfiif*; ava *mixaffif.*

¶ *xaffif ʕala* to put over on. *tiftikir ʔinnak ḥa-txaffif ik-kalam-da ʕalayya* do you think you're going to take me in by that?

اتخشّش *ʔitxaffif* /vi/ to be made to enter, be inserted. *ʔil-muṣmaar itxaffif bi-ṭluuʕ ir-rooḥ* the nail went in (only) with the utmost difficulty. - iva *mitxaffif.*

¶ *ʔitxaffif ʕala* to (be used to) deceive. *yiẓhar ʔinn ig-gadaʕ il-ʕabiiṭ da k-kalaam itxaffif ʕalee* it appears that this foolish fellow has been taken in.

خ ش ع

خشع *xafaʕ (a)* /vi/ to be submissive, be humble (particularly before God). - vn *xufuuʕ*; ava *xaafiʕ.*

خشوع *xufuuʕ* /n/ submissiveness (particularly before God), (holy) reverence.

خ ش ف see خ ش ا ف : *xufaaf*

خ ش م

خشم *xafam (i)* /vt/ to keep under control, keep a tight hand on (s.o.). *da-nti laazim tixfimi bint-ik fiwayya* you should exercise firmer control over your daughter. - vn *xafm, xafamaan*; ava *xaafim*; pva *maxfuum.*

اتخشم *ʔitxafam* /vi/ to be kept under control. - iva *mitxifim.*

انخشم *ʔinxafam* = *ʔitxafam.* - iva *minxifim.*

خ ش ن

خشنى *xufni* /adj */ boorish, rough and rude.

خشن *xifin* /adj */ **1** rough, coarse textured. *gild' xifin* rough skin. *faay xifin* coarse tea. ‖*ṣoot xifin* a husky voice. **2** rough, tough. ‖*ʕaḍma xifna* bigwig. - /adverbially/ *bi-yilʕabu xifin* they play rough.

أخشن *ʔaxfan* /el/ more/most rough, coarse, tough, etc.

خشانة *xafaana* /n/ roughness of finish.

خشونة *xufuuna* /n/ **1** roughness of finish. **2** roughness of behaviour.

خشّن *xaffin* /vt/ **1** to roughen, give a rough finish to. *ʔil-gaww' bi-yxaffin il-ʔalwaaḥ* the weather roughens the planks. **2** to thicken. *xaffin il-ʕalawooz milli* thicken the thread one millimetre. **3** to toughen up. *ʔig-geef xaffin-u* army life has toughened him up. — /vi/ **4** to act tough. *huwwa xaffin maʕaaya fik-kalaam* he talked to me roughly. - vn *taxfiin*; ava *mixaffin.*

تخشينة *taxfiina* /n pl *-aat, taxafiin*/ piece of cloth or paper used to tighten a joint.

اتخشّن *ʔitxaffin* /vi/ passive of *xaffin.* - iva *mitxaffin.*

اخشنّ *ʔixfann* /vi/ to become rough. *ʔil-xafab ʃaqqaq wi-xfann' min if-fams' wir-ruṭuuba* the wood has cracked and become rough from (exposure to) the sun and humidity. - iva *mixfinn.*

خ ش و ل

خشول *xafwal* /vi/ to make a rattling sound. *xafwala fil-mutoor* a rattling sound in the motor. - vn *xafwala*; ava *mixafwil.*

خ ش ى

خشى *xifi (a)* **1** /vt/ to fear. *ʔixfa llaah* fear God! *ma-b-yixfuu-ſ ʔawamr-i* they don't respect my orders. **2** /vi/ to feel fear. *ʔif-fayaṭiin bi-yixfu min ʔaayit ik-kursi* the devils fear the Throne verse (of the Koran). - vn *xafya, xifa, xafayaan*; ava *xaafi*; pva *maxfi.*

خسى *xifa* /n/ bashfulness, modesty, shame.

خشيان *xafyaan* /adj */ bashful, shy, timid.

خشيان *xafayaan* /n/ timidity, bashfulness, embarrassment.

اختشى *ʔixtafa* /vi/ to become embarrassed, have a sense of shame. *ma-b-yixtifii-ſ min taṣarrufaat-u di ʠuddaam wilaad-u* isn't he ashamed to act so in front of his children? ‖ *ʔixtifi (ʕala damm-ak)* have some sense of shame! - *ʔixtifi ʕala faʕr-ak if-faayib* shame on your grey hairs! - *ʔilli xtafu maatu* only the shameless are left! there's no modesty left in the world! - *ʔilli yixtifi min bint" ʕamm-u ma-yxallif-ſ' wlaad [prov]* (he who feels embarrassed before his cousin when she becomes his wife, begets no children) ≈ he will achieve nothing who does not face the facts. - ava *mixtifi.*

خ ص ب

خصب *xaṣb, xiṣbˁ* /adj/ fertile, rich. *ʔarḍ' xaṣba* fertile land. *xayaal xiṣb* a fertile immagination.

أخصب *ʔaxṣab* /el/ more/most fertile.

خصوبة *xuṣuuba* /n/ fertility.

خصيب *xaṣiib: il-hilaal il-xaṣiib* the Fertile Crescent.

إخصاب *ʔixṣaab* /n/ impregnation (of animals).

خصّب *xaṣṣab* /vt/ **1** to fertilize, enrich (land). **2** to impregnate. - vn *taxṣiib*; ava/pva *mixaṣṣab.*

اخصّب *ʔitxaṣṣab* /vi/ **1** to be fertilized, become or be made fertile. **2** to be impregnated. - ava/iva *mitxaṣṣab.*

استخصب *ʔistaxṣab* /vt/ to consider fertile.

خ ص ر

خصر *xaṣr* /n pl *xuṣuur*/ waist.

خاصر *xaaṣir* /vt/ to put the arm round the waist of (s.o.). - vn *mixaṣra*; ava *mixaaṣir*.

اختصر *ʕixtaṣar* /vt/ **1** to summarize, condense. *ʕixtaṣar il-maqaala* he gave a summary of the article. **2** to short-cut. *ʕis-sawwaaq ixtaṣar iṭ-ṭariiq* the driver took a short cut. — /vi/ **3** to be brief, be concise. *ʕixtiṣir fi-kalaam-ak* be brief in what you have to say! *ʕixtaṣar ik-kalaam laakin il-maʕna waaḥid* he cut down what he had to say, but the sense was the same. **4** to isolate oneself, hold oneself aloof. *ʕiḥna mixtiṣriin ʕan ig-giraan* we don't mix with the neighbours. *humma ʕayfiin mixtiṣriin fi-ḥittit-hum* they live apart from the people of the neighbourhood. - vn *ʕixtiṣaar*; ava *mixtiṣir*; pva *muxtaṣar*.

اختصار *ʕixtiṣaar* /n/ brevity. *bi-xtiṣaar* in brief, to sum up.

خ ص ص [1]

خصّ *xaṣṣ[i] (u)* /vt/ **1** to concern, pertain to. *di ma-bi-txuṣṣ[a]-haa-ʃ* that's none of her business. *bi-yxuṣṣ-u-hum rukn[i] fil-maṭaar* they have a special corner in the airport. *ʕilli yxuṣṣ-u min il-wirs* such of the legacy as belongs to him. **2** to pick out, select. *xaṣṣuu bit-tarqiyya* they singled him out for promotion. — /vi/ **3** to apply or refer specially or exclusively. *ʕir-raḥma txuṣṣ[i] wil-laʕna tʕumm [prov]* salvation is for the few, damnation for the many. - vn *xiṣṣiyya, xuṣuuṣ*; ava *xaṣṣ, xaaṣṣ↑*; pva *maxṣuuṣ*.

خصوص *xuṣuuṣ: bi-xuṣuuṣ* concerning, with regard to. *ʕala (wagh[i]) l-xuṣuuṣ* especially, particularly.

¶ *xuṣuuṣan* /adv/ especially, in particular. *ʕana zaʕlaan minnu giddan wi-xuṣuuṣan ʕinnu ma-ʕazza-nii-ʃ* I'm very upset with him, especially since he didn't pay me (his) condolences.

خصوصي *xuṣuuṣi* /adj/ **1** private, personal. *duruus xuṣuṣiyya* private lessons. — /adv/ **2** especially. *faṣṣalt il-badla xuṣuuṣi ʕafaan il-ḥafla* I had the suit made especially for the party. **3** particularly. *bi-yḥibbu yitfassaḥu w-xuṣuuṣi ʕiza kaan ig-gaww[a] ḥilw* they like to go out especially if the weather is good.

خاصّ *xaṣṣ[2], xaaṣṣ↑* /adj/ **1** of a special type. *ʕil-manaaṭiq il-bitroliyya laha ṭabiiʕa xaṣṣa* the petroleum-producing areas have a particular nature. *ʕagaaza xaṣṣa ʕafaan il-ḥagg* a special leave of absence for the pilgrimage. **2** extra-special, noteworthy. *ʕamaluu-lu ʕafwa xaṣṣa* they made him a special dinner. **3** private, not public, personal. *ʕil-qiṭaaʕ il-xaaṣṣ* the private sector (of the economy). *madaaris xaṣṣa* private schools.

¶ *xaṣṣ[i] bi-* particular to, peculiar to. *ʕil-ʃumuur il-xaṣṣa bil-muwaẓẓafiin* matters relating to employees. *markib xaṣṣa b-naʕl il-biḍaaʕa* a ship specially for freight transportation. *ʕil-lahga l-xaṣṣa biṣ-ṣiʕiid* the dialect peculiar to Upper Egypt. *kull[i] waaḥid fi-makaan-u l-xaṣṣ[i] bii* everyone is in his proper place.

خاصّة *xaaṣṣa↑* /n/ **1** /pl *xawaṣṣ/ = xaṣṣiyya*. **2** /pl *xaṣaayiṣ/* characteristic, trait (of a group). *xaṣṣa min xaṣaayiṣ il-maganiin* one of the characteristics of the insane.

¶ *xaṣṣatan, xaaṣṣatan↑* /adv/ especially, expressly, in particular.

خاصّيّة *xaṣṣiyya* /n pl *-aat/* property, characteristic (usually, of matter). *min xaṣṣiyyaat il-ḥadiid tawṣiil ik-kahraba* it is one of the properties of iron to conduct electricity.

مخصوص *maxṣuuṣ* /adj */ **1** specific, particular, certain. *tafṣiila maxṣuuṣa lil-ʃawlaad* a particular cut (of clothes) for children. **2** extra, special. *banziin maxṣuuṣ* first-grade petrol or gas. — /adv/ **3** especially, expressly, in particular. *gayy[i] maxṣuuṣ ʕafaan yitkallim maʕaa* he's coming expressly to talk with him. *gaab ik-kitaab maxṣuuṣ ʕafaani ʃana* he brought the book especially for me.

أخصّ *ʃaxaṣṣ* /el/ more/most special, more/most particular. *ʕala l-ʃaxaṣṣ* or *bil-ʃaxaṣṣ* especially, particularly. *saʕaat il-ʃizaaʕa b-tiṭwal wi-ʕala l-ʃaxaṣṣ[i] fil-munasbaat il-waṭaniyya* sometimes the hours of broadcasting are lengthened, especially on national occasions.

أخصّائي *ʃaxiṣṣaaʃi* /n */ specialist. *ʃaxiṣṣaaʃi gtimaaʕi* a social worker.

خصّص *xaṣṣaṣ* /vt/ to assign, allot. *laazim yixaṣṣaṣ makaan mustaqill[a] ʕafaan il-ʕummaal* he must assign a separate place for the workers. *da mxaṣṣaṣ lil-maktab* this is earmarked for the office. - vn *taxṣiiṣ*; ava/pva *mixaṣṣaṣ*; pva *muxaṣṣaṣ*.

اختصّص *ʃitxaṣṣaṣ* /vi/ **1** to specialize. *ḥ-atxaṣṣaṣ fig-giraaḥa* I'm going to specialize in surgery. *muḥaḍraat mutaxaṣṣiṣa* specialized lectures. **2** to be assigned, be allotted. *ʃil-muwaẓẓaf da txaṣṣaṣ li-stilaam il-busṭa* that employee was assigned the task of taking in the mail. - vn *taxaṣṣuṣ*; ava/iva *mutaxaṣṣiṣ↑, mitxaṣṣaṣ*.

تخصّص *taxaṣṣuṣ* /n pl *-aat/* specialization.

اختصّ *ʃixtaṣṣ* /vi/ **1** to concern oneself. *ʃil-muwaẓẓaf il-muxtaṣṣ* the responsible official, the official whose business it is. *kull[i] lagna b-tixtaṣṣ[i] b-nafaaṭ muʕayyan* each committee concerns itself with a particular activity. **2** to be characterized, be distinguished. *kull[i] balad bi-tixtaṣṣ[a] ʕan it-tanya b-mumayyizaat* each country is distinguished from another by characteristic traits. - vn *ʃixtiṣaaṣ*; ava *muxtaṣṣ*.

اختصاص ʕixtiṣaaṣ /n pl -aat/ concern, business. *da mif ixtiṣaaṣ-ak* that's not your concern. *da waaxid ɪxtɪṣaṣaat il-muʃrif* he's taken over the supervisor's functions. *ʕixtiṣaṣaat il-maḥaakim il-muxtalifa* the jurisdictional competence of the various courts.

[2] خ ص ص
خصّ *xaṣṣ*[3] /coll n/ lettuce(s).
خصّة *xaṣṣa* /unɪt n, pl -aat/ a lettuce.
خصّايه *xaṣṣaaya* = *xaṣṣa*.

[3] خ ص ص
خصّ *xuṣṣ* /n pl ʕɪxṣaaṣ/ *[rur]* hut, shack, shanty, hovel.

خ ص ل
خصلة *xuṣla* /n pl -aat, xuṣal/ tress, lock.
خصلة *xiṣla* /n pl *xaṣaayil, xiṣlaat*/ personal trait, habit. *ʕilli fii xiṣla ma-yisla-haa-ʃ [prov]* ≈ a leopard doesn't change his spots.

[1] خ ص م
خصم *xaṣam (ɪ)* /vt/ to deduct, subtract. *xaṣam-lɪ yomeen* he docked me two days' pay. -vn *xaṣm*; ava *xaaṣim*; pva *maxṣuum*.
خصم *xaṣm*[1] /n pl *xuṣumaat, xuṣuum*/ discount, deduction. *bi-yiftiri minhum bi-xaṣm[a] ɛafara fil-miyya* he buys from them at a ten percent discount.
خصميّة *xaṣmiyya* /n pl -aat/ discount, deduction. *ʕil-xaṣmiyya ɛafaan il-ʕaɛḍaaʕ bass* the discount is for members only.
خصم *xiṣm*[1], *xaṣm*[2] /n pl *xuṣuum, ʕaxṣaam*/ opponent. *xuṣuum id-daɛwa* the opposing parties in the lawsuit. *xiṣm' w-ḥakam* ≈ judge and jury, as in *ɛaamil nafs-u xiṣm' w-ḥakam* he's setting himself up as judge and jury.
خصومة *xuṣuuma* /n pl -aat/ dispute, quarrel.
انخصم *ʕitxaṣam* /vi/ to be deducted, be subtracted. *ʕil-baaqi txaṣam lil-xidma* the balance has been deducted for service. -iva *mitxiṣim*.
انخصم *ʕɪnxaṣam* = *ʕitxaṣam*. -iva *mɪnxiṣim*.
خاصم *xaaṣim* /vt/ to break off relations with (s.o.) as a result of a dispute, cease to be on speaking terms with. -vn *xiṣaam*; ava *mɪxaaṣɪm*.
اتخاصم *ʕɪtxaaṣɪm* /vi/ to break off relations with each other as a result of a dispute. *humma mɪtxaṣmiin min mudda kbɪra* they haven't been on speaking terms for a long time. -ava *mitxaaṣim*.
اختصم *ʕɪxtaṣam* **1** /vt/ to dispute with, quarrel with. *ruuḥ ʕana mixtiṣm-ak lɪ-yoom il-qiyaama* ≈ I will never talk to you again! **2** /vi/ to have a dispute, quarrel. *ʕixtaṣamu quddaam ɪl-maḥkama* they quarrelled in front of the court. -iva *mixtiṣim*.

[2] خ ص م
خصم *xiṣm*[2] /n pl *xiṣaam, ʕaxṣaam*/ bolster-end cover.

خ ص ى
خصى *xaṣa (i)* /vt/ **1** to castrate, geld. **2** to gain control over, have (s.o.) by the balls. ‖*raagil maxṣɪ* spineless man, drip. -vn *xaṣayaan, xaṣy*; ava *xaaṣi*; pva *maxṣi*.
خصية *xaṣya, xiṣyaʔ* /n/ testicle (especially of a man).
خصى *xaṣiy* /adj/ castrated, gelded.
مخاصى *maxaaṣi* /pl n/ testicles (as food).
اتخصى *ʕitxaṣa* /vi/ to be castrated, be gelded. -iva *mitxiṣi*.
انخصى *ʕɪnxaṣa* = *ʕitxaṣa*. -iva *minxiṣi*.

خ ض ر
أخضر *ʕaxḍar* /adj, fem *xaḍra*, pl *xuḍr*/ **1a** green. ‖*nifs-u xaḍra* he is gentle and unassuming. *-ɪlɛit-lu s-sinaan il-xuḍr* his teeth fell out (from old age). *- ʕil-ɛataba l-xaḍra* district of Cairo near the Opera Square. *- ʕil-qubba l-xaḍra* (1) the dome above the Prophet Muhammad's tomb. (2) the Prophet's Mosque in Medina. **1b** (loosely) greenish-blue, pale blue, greenish-grey, greyish-brown. *quṭṭa xaḍra mxaṭṭaṭa* a tabby cat. *naɛl' ʕaxḍar* a (sandal) sole of camel leather (so-called because of its greenish tinge). **2a** unripe (of plants, fruit etc.). *manga xaḍra* unripe mangoes. **2b** not fully processed. *gild' ʕaxḍar* half-tanned leather. ‖*ṭuub ʕaxḍar* sun-dried mud brick. **2c** fresh, not salted or cured (of fish). **3** damp, moist. *ʕɪl-hiduum lɪssa xaḍra* the clothes are still damp. **4** blessed with good fortune, prosperous. *sana xaḍra* a prosperous year. *ʕiid-u xaḍra* he has a lucky touch, he brings profit to whatever he involves himself in. *qadam-u ʕaxḍar ɛaleena* he brings us good luck.
الأخضرين *ʕil-ʕaxḍareen: sabb-ɪ-lu* (or *laɛan-lu* etc.) *l-ʕaxḍareen* he insulted (or cursed etc.) his whole lineage.
خضره *xuḍra* /coll n/ **1** pot herb(s). **2** greens, green vegetables. **3** verdure.
خضر *xɪḍr: sid-na l-xɪḍr* a pious man said in the Koran to have had an encounter with Moses and to be endowed with immortality and divine knowledge.
خضرى *xuḍari* /n pl -yya/ greengrocer.
خضار *xaḍaar* /n/ verdure, greenness.
خضار *xuḍaar* /coll n, pl *xuḍrawaat*/ vegetable(s).
خضّر *xaḍḍar* /vt/ **1** to make green. *ʕis-sabɣa xaḍḍarɪt*

il-ɣumaaf the dye made the fabric green. *ʃil-mayya bi-txaḍḍar iz-zarɛ* water makes plants grow green. **2** to cause to prosper. *yaʾrabbʿ xaḍḍar lina zarɛit-na* Lord, may we have a rich harvest. **3** *[agric]* to prepare and sow (land). — /vi/ **4** to sprout, put forth plants (of land). - vn *taxḍiir*; ava/pva *mixaḍḍar*.

اخضرّ *ʃixḍarr* /vi/ to turn green. *loon mixḍirr* a greenish colour. - vn *ʃixḍiraarʔ*; ava *mixḍirr*.

خ ض ر م

مخضرم *muxaḍram* /adj */ spanning more than one generation, experienced in the old ways and the new.

خ ض ض

خضّ *xaḍḍ (u)* /vt/ **1** to churn (milk). **2** to startle, give a sudden fright to. *lamma naṭṭʿ min wara l-baab xaḍḍ-i-ni moot* when he jumped out from behind the door he scared me to death. - vn *xaḍḍ, xaḍaḍaan*; ava *xaaḍiḍ*; pva *maxḍuuḍ*.

خضّة *xaḍḍa* /inst n, pl *-aat*/ start, sudden fright. ‖*ɬaasit il-xaḍḍa* shallow metal bowl used in folk medicine from which persons subjected to a fright drink specially treated water as a protection against sterility.

انخضّ *ʃitxaḍḍ* /vi/ to be startled, be given a sudden fright. - iva *mitxaḍḍ*.

انخضّ *ʃinxaḍḍ* = *ʃitxaḍḍ*. - iva *minxaḍḍ*.

خ ض ع

خضع *xaḍaɛʾʔ (a)* /vi/ to be subordinate or subject. *balad-na b-tixḍaɛ li-muḥafẓit ʃasyuuṭ* our town comes under Assiut province. *bi-yixḍaɛ lit-taqaliid* it is governed by tradition. - vn *xuḍuuɛ*; ava *xaaḍiɛ*.

خضع *xaḍaɛ²ʔ (i)* /vt/ to subject, subjugate, subordinate.

أخضع *ʃaxḍaɛʔ* /vt/ to subject, subjugate, subordinate. *ʃaxḍaɛ ḥamaat-u l-ʃiradt-u* he made his mother-in-law submit to his will. - vn *ʃixḍaaɛ*; ava *muxḍiɛ*.

خ ط ء

خطى *xaṭaʔ (i)* /vi/ to err. *xaṭeet fi-ḥaqq-u* I did him wrong. - vn *xaṭayaan*; ava *xaaṭi*.

خاطئ *xaaṭiʃ* /adj */ **1** irregular, against the rules. **2** wrong, at fault. — /n */ **3** *[Chr]* sinner.

خطأ *xaṭaʃ* /n pl *ʃaxṭaaʃʔ*/ mistake, fault. *ɛalaʃaan niṣallaḥ ʃaxṭaʃ-na* so we can rectify our mistakes.

خطيّة، خطيئة *xaṭiyya* /n pl *xaṭaaya*/ sin. ‖*xaṭiyyit* ... poetic justice as retribution for wrong done to (s.o.), as in *rigl-u kkasarit xaṭiyyit is-sitt il-ɣalbaana lli ḍarab-ha* when he broke his leg it served him right for having hit that poor woman.

أخطى، أخطأ *ʃaxṭaʃʔ, ʃaxṭa* /vi/ **1** to err, make a mistake. *ʃaxṭeet* (or *ʃaxṭaʃtʿ*) *fit-taqdiir* I made a wrong estimate *bi-yixṭiʃ fi-ḥaqq in-naas* he does people wrong. **2** to sin, transgress. - ava *muxtiʃ, muxṭi*.

خ ط ب

خطب *xaṭab (u)* **1** /vt/ **1a** to propose marriage to (a girl). *raaḥ yixṭub-haa-lu ggawwiz-ha* he went to propose marriage to her on his (friend's) behalf, (and) he married her (himself). **1b** to ask for (a girl) in marriage. *xaṭabt-a-ha min ʃabuu-ha* I asked her father for her hand. **1c** to become engaged to (a girl). **2** /vi/ to deliver a speech, give an oration. - vn *xuṭba, xuṭuuba*; ava *xaaṭib*; pva *maxṭuuba*.

خطبة *xuṭba* /n/ **1** /pl *xuṭab*/ **1a** speech, oration. **1b** sermon given in a mosque. **2** /no pl/ engagement.

خطوبة *xuṭuuba* /n pl *-aat*/ engagement, engagement ceremony. *ʃil-xuṭuuba ɬaalit li-sana* the engagement lasted a year. *ʃana ɛazmaa-k ɛala xuṭubt-i* I invite you to my engagement.

خاطبة *xaṭba* /n pl *-aat*/ professional female matchmaker.

خطاب *xiṭaabʔ* /n pl *-aat*/ **1** letter. *gamiiɛ il-xiṭabaat il-muṭaɛalliqa bil-mawḍuuɛ* all of the correspondence relating to the subject. **2** speech, address. *xiṭaab ir-rayyis itzaaɛ fit-tilivizyoon* the President's speech was broadcast on television.

خطابي *xiṭaabiʔ: tilliɣraaf xiṭaabi* night letter.

خطيب *xaṭiib* /n/ **1** /pl *xuṭṭaab*/ fiancé. **2** /pl *xuṭaba*/ speaker, orator.

خطيبة *xaṭiiba* /n pl *-aat*/ **1** fiancée. **2** female orator.

خطّابة *xaṭṭaaba* = *xaṭba*.

اتخطب *ʃitxaṭab* /vi/ passive of *xaṭab*. - ava *mitxiṭib*.

انخطب *ʃinxaṭab* = *ʃitxaṭab*.

خاطب *xaaṭib* /vt/ to address, talk to. - vn *muxaṭba*; ava *muxaaṭib*; pva *muxaaṭab*.

اتخاطب *ʃitxaaṭib* /vi/ **1** to converse, confer, talk together. **2** to be addressed. - ava/iva *mitxaaṭib*.

خ ط ر

خطر *xaṭarʿ (u)* /vi/ to come to mind. *fikra ma-xaṭarit-ʃʿ ɛala baal-i ʃabadan* a thought which never crossed my mind. - vn *xuṭuur*; ava *xaaṭir*.

خاطر *xaaṭirʿ* /n pl *xawaaṭir*/ **1** inner self, inner thoughts and feelings. *ɋalit-lu kull illi bi-yduur fi-xaṭir-ha* she told him everything that was going on in her mind. *xawaaṭir il-mulaqqin laazim tikuun murakkiza ɛal-mumassil* the prompter's whole attention must be focused on the actor. *xaṭar-li xaaṭir* an idea occurred to me. ‖*bi-xaaṭir-* according to the inclination of, as in

ʕiɛmil bi-xaṭr-ak do as you please! - *gabar (bi-)xaaṭir* or ʕiftara (or *ṭayyib) xaaṭir* to soothe (s.o.'s feelings) with a kind word or deed, treat (s.o.) with sympathetic consideration, help out (s.o. in distress), as in *kattar xeer-u ʕinnu gabar bi-xaaṭir il-yatiim* he is much to be praised for showing kindness to the orphan, *gabr il-xawaaṭir ɛal-allaah* ≈ your kindness to me will be rewarded by God's to you. - *kasar bi-xaaṭir* to hurt the feelings of, treat (s.o.) without consideration. - *xad ɛala xaṭr-u* he felt offended, his feelings were hurt. - *ʃaaf xaaṭir(-u)* to see to (s.o.'s) needs, as in *ʃuuf xaṭr-u* give him a gratuity, ʕil-bint' bi-tḥibb-ak - *ʃuuf xaṭir-ha* the girl's in love with you - do something to make her feel good. **2** good will, kind feeling (held by one for another). *lu xaaṭir kibiir ɛand il-mudarrisiin* the teachers would do anything for him. ‖*ɛaʃaan xaaṭir* (1) for the sake of, as in *taɛaali ɛaʃaan xaṭr-i* come for my sake! (2) so that, in order to, as in *bi-yqaddim maʃariiɛ lil-ʕaqsaam ɛaʃaan xaaṭir tinaffiz-ha* he sends on projects to the departments for them to carry out.

¶ *ɛamal xaaṭir li-* to do a good turn to. *bi-yiɛmilu xaaṭir li-baɛḍ* they do one another good turns. - *xad (bi-)xaaṭir* to pay condolences to.

خطر *xuṭr* /n/ wish, desire. *miʃ bi-xuṭr-i* it does not depend on my will.

خطر *xaṭar*[2] /n pl *ʕaxṭaar*/ danger, risk. *fii xaṭar ɛaleeha min il-moot* she's in danger of dying. *kull' mihna laha ʕaxṭar-ha* every profession has its risks. -/adjectivally/ ʕil-fiiʃa di xaṭar qawi this socket is very dangerous.

خطورة *xuṭuura* /n/ **1** danger. *fii xuṭuura ɛala ḥayaat-ak* you are in danger of your life. **2** consequence, significance, seriousness. *ma-tqallil-ʃ' min xuṭuurit wabaaʕ ir-raʃwa* don't play down the gravity of the bribery epidemic.

خطير *xaṭiir* /adj/ **1** dangerous. **2** serious, critical, crucial. **3** tremendous, incredible.

أخطر ʕ*axṭar'* /el/ **1** more/most dangerous. **2** more/most serious, grave or significant.

مخاطر *maxaaṭir* /pl n/ dangers.

خاطر *xaaṭir*[2] /vi/ to take risks, be reckless. *miʃ laazim tixaaṭir bi-ḥayaat-ak* you should not risk your life. - vn *muxaṭra*; ava *mixaaṭir*.

مخاطرة *muxaṭra* /n pl *-aat*/ risk.

أخطر ʕ*axṭar*[2] /vt/ to notify, inform. *ḥa-yixṭir il-bank* he'll notify the bank. - vn ʕ*ixṭaar*; ava *muxṭir*.

إخطار ʕ*ixṭaar* /n pl *-aat*/ notification, advice note. ʕ*ixṭaar saḥb* debit withdrawal note.

خ ط ر ف

خطرف *xaṭraf* /vi/ to be delirious, rave. *bi-txaṭraf min is-suxuniyya* she's raving from the fever. - vn *xaṭrafa*; ava *mixaṭraf*.

خ ط ط

خطّ *xaṭṭ' (u)* /vt/ **1a** to mark (paper) with lines. *xuṭṭ il-waraqa di* rule lines on this sheet of paper. **1b** to draw (lines). *xuṭṭ' talat xuṭuuṭ* draw three lines. **2** to furrow (land). *nixuṭṭ il-ʕarḍ il-ʕawwil* first we furrow the land. **3** to pencil (the eyebrows). - vn *xaṭṭ*; ava *xaaṭiṭ*; pva *maxṭuuṭ*.

خطّ *xaṭṭ*[2] /n pl *xuṭuuṭ*/ **1a** line. *xaṭṭ il-ḥayaah* the line of life (of the hand). *xaṭṭ il-ʕufuq* the horizon. ‖*xaṭṭ in-naar* the line of fire, the battle front. - *xaṭṭ' seer* itinerary, route. - *ṭiliɛ min il-xaṭṭ* he did something unusual, he changed his routine. - *qaɛad-li fil-xaṭṭ* he wouldn't budge. **1b** route (e.g., of a bus). *nizilt' f-ʕaaxir il-xaṭṭ* I got off at the terminus. **1c** telephone line, telephone connection. ʕ*iddii-ni xaṭṭ' xaarigi* give me an outside line! ‖*huwwa miʃ maɛaaya ɛala l-xaṭṭ* there's no communication between us, he's not on my wavelength. **2** *[agric]* furrow. **3a** handwriting. *xaṭṭ' miin da* whose handwriting is that? **3b** script, calligraphic style. *xaṭṭ' kuufi* Kufic script. **3c** type fount.

مخطوط *maxṭuuṭ* **1** /n pl *-aat*/ (hand-written) manuscript. **2** /adj/ in manuscript form.

مخطوطة *maxṭuuṭa* /n pl *-aat*/ (hand-written) manuscript.

خطّة *xiṭṭa, xuṭṭa* /n pl *xiṭaṭ, xuṭaṭ*/ plan, scheme.

خطّاط *xaṭṭaaṭ* /n */ calligrapher, sign-writer.

خطّط *xaṭṭaṭ* /vt/ **1** to draw lines on, mark with lines, stripe. *xaṭṭaṭ il-malɛab* mark out the pitch! *kiliim mixaṭṭaṭ* a striped carpet. ‖*nixaṭṭaṭ bil-wadaɛ* we (fortune tellers) tell the future using shells. **2** to furrow. *lamma tinɛam il-ʕarḍ' kwayyis nixaṭṭaṭ-ha bil-miḥraat* when the ground is nice and smooth we furrow it with the plough. **3** to pencil (eyes and eyebrows). **4** to plan, draw up plans for, design. ʕ*il-ḥarb' tiḥtaag taxṭiiṭ* war needs planning. *ḥa-nxaṭṭaṭ il-balad min gidiid* we shall re-design the town. *wizaarit it-taxṭiiṭ* the Ministry of Planning. - vn *taxṭiiṭ*; ava/pva *mixaṭṭaṭ*.

مخطّط *muxaṭṭaṭ* /n pl *-aat*/ scheme, plot, conspiracy. *muxaṭṭaṭ yasaari* a leftist plot.

تخطّط ʕ*itxaṭṭaṭ* /vi/ passive of *xaṭṭaṭ*. - iva *mitxaṭṭaṭ*.

خ ط ف

خطف *xaṭaf (a)* /vt/ **1** to snatch, grab. *xaṭaft' ʃanṭit-ha wi-griit* I snatched her bag and ran off. ‖*xaṭaf rigl-u* to hop off, nip out, get oneself off, as in *xaṭaft' rigl-i wi-ʃtareet-u* I nipped out and bought it, *laazim ʕaxṭaf rigl-i l-ḥadd' ʃirka min ʃarikaat it-taʕmiin* I'd better get

myself down to one of the insurance companies. - *xaṭaf nafas-u* (1) to gasp for breath. (2) to constrict the breathing of, as in *ʕir-rabwʿ b-yixṭaf nafas-i* the asthma makes it difficult for me to breathe. **2a** to purloin, steal. *ʕil-ɣumda xaṭaf zarɣit-i* the mayor stole my crops. **2b** to kidnap. *xaṭafu ʕibn-u w-ṭalabu fidya* they kidnapped his son and demanded a ransom. **2c** to hijack. *xaṭafu ṭ-ṭayyaara* they hijacked the plane. - vn *xaṭf*; ava *xaaṭif*; pva *maxṭuuf*.

خطفة *xaṭfa* /inst n, pl *-aat*/ a grab, a snatch.

مخطوف *maxṭuuf* /adj/ pallid, blanched (of the face). *wiff-a-ha maxṭuuf wi-baayin ʕinnu ḥa-yuʁma ɣaleeha* her face is pallid and it looks as if she's going to faint. - also *maqṭuuf*.

خطّاف *xaṭṭaaf* /n * and pl *xaṭṭaafa*/ **1** snatcher. *xaṭṭaaf ʃunaṭ* a bag-snatcher. ‖*xaṭṭaafit riggaala* a woman who snatches men (from other women). - *xaṭṭaaf ʕigwaan [soccer]* goal-snatcher, cunning goal-scorer. **2a** kidnapper. **2b** hijacker.

خطّاف *xuṭṭaaf* **1** /n pl *xaṭaṭiif*/ large hook. **2** /coll n/ swallow(s).

مخطاف *muxṭaaf* /n pl *maxaṭiif*/ anchor.

اتخطف *ʕitxaṭaf* /vi/ passive of *xaṭaf*. - iva *mitxiṭif*.

انخطف *ʕinxaṭaf* = *ʕitxaṭaf*. - iva *minxiṭif*.

اتخاطف *ʕitxaaṭif* /vt/ to snatch from one another. *ʕahumma btadu yitxaṭfu k-koora* they've started to grab the ball from one another. - ava *mitxaaṭif*.

خ ط م

مخطمة *maxṭama* /n pl *maxaaṭim*/ muzzle. *ʕidḥak ɣal-ɢirdʿ b-maxṭama gild [prov]* (humour the ape with a leather muzzle) ≈ little things please little minds.

خ ط ى [1]

خطوة *xaṭwa* /n pl *-aat, xaṭaawi*/ **1** step, pace. *mifi l-xaṭwiteen li-bet-ha* he walked the few steps to her house. ‖*xaṭwa ɣaziiza* ≈ you honour us by your visit! (especially to one who visits after a protracted absence). - *ʕahl il-xaṭwa* (in popular belief) people who have the power to transport themselves over vast distances by supernatural means or to appear simultaneously in more than one place. - *been il-xaṭwa wil-xaṭwa yifɣal allaah ma yaʃaaʕ [prov]* (between one step and the next God may do as He wills) ≈ there's many a slip twixt the cup and the lip. - *bi-yɣidd il-xaṭaawi ɣaleeha* he spies on her. **2** manner of stepping. ‖*xaṭwa tanżiim [mil]* march on the spot! **3** a stage, a step in a procedure.

خطّى *xaṭṭa* **1** /vt/ to step over, cross. *w-allaahi m-axaṭṭi ɣatabit bet-hum baɣdʿ kida* I swear I'll never cross their threshold after this! ‖ *ʕimʃi sana wala txaṭṭi ɢana [prov]* (walk for a year rather than cross a ditch) ≈ slow but sure is best. **2** /vi/ to take a step, step. *law xaṭṭeet hina ḥ-amawwit-ak* if you come this way, I'll kill you! - vn *taxṭiyya*; ava/pva *mixaṭṭi*.

اتخطّى *ʕitxaṭṭa* /vt/ **1** to surpass, exceed. *ʕis-sawwaaɢ itxaṭṭa s-surɣa l-qanuniyya* the driver exceeded the speed limit. **2** to pass (s.o.) over, disregard. *ʕitxaṭṭuu-ni fit-tarɢiyya* they passed me over for promotion. – /vi/ **3** to be stepped over, be crossed. - ava/iva/pva *mitxaṭṭi*.

[2] خ ط ى see خ ط ء: *xaṭa, xaṭayaan, xaaṭi, xaṭiyya, xaṭaaya, ʕaxṭa, muxṭi*

خ ف ت

خافت *xaafit* /adj/ quiet, faint. *ḍooʕ xaafit* subdued light.

خ ف س

خفس *xafas (i)* /vt/ **1** to thrust down. *xafasʇ wiff-i fil-maxadda* I buried my face in the pillow. *ḥ-axfis buuz-u fil-ʕarḍ* I'll push his face into the dust! ‖*huwwa lli xafis-ni* he's the one who's holding me back (in life, in my career etc.). - *ya maxfuus* insulting form of address ≈ you who should be trodden into the ground. - *ʕil-maxfuus* insulting form of reference to one who is absent. - vn *xafs, xafasaan*; ava *xaafis*; pva *maxfuus*.

اتخفس *ʕitxafas* /vi/ to be thrust down. ‖ *ʕitxifis* sit down! plonk yourself down! - iva *mitxifis*.

انخفس *ʕinxafas* = *ʕitxafas*. - iva *minxifis*.

خ ف ش

خفّاش *xuffaaf, xaffaaf* /n pl *xafafiif*/ *[zool]* bat.

خ ف ض

خفض *xafaḍ (i)* /vt/ to lower. *ʕil-ʕasbiriin mumkin yixfiḍ il-ḥaraara* aspirin may bring the temperature down. - vn *xafḍ*; ava *xaafiḍ*; pva *maxfuuḍ*.

خافض *xaafiḍ* /n/ Caster-down of the proud (epithet of God).

انخفض *ʕinxafaḍ* /vi/ to become low, decline. *ʕinxifaaḍ fil-mabiɣaat* a drop in sales. *badʕʿ minxifiḍ [athl]* a crouching start. - vn *ʕinxifaaḍ*; ava *minxifiḍ, munxafiḍ*.

منخفض *munxafaḍ* /n pl *-aat*/ depression, low-lying area. *munxafaḍ il-qaṭṭaara* the Qattara depression.

خفّض *xaffaḍ* /vt/ to lower, reduce. *ʕasɣaar muxaffaḍa* reduced prices. - vn *taxfiiḍ*; ava/pva *mixaffaḍ*; pva *muxaffaḍ*.

تخفيض *taxfiiq* /n pl *-aat*/ discount, reduction. *ʕiʃtara b-taxfiiq* he bought at a discount.

اتخفّض *ʕitxaffaq* /vi/ to be lowered, be reduced. *ʕis-siʕr itxaffaq* the price was reduced. - iva *mitxaffaq*.

¹ خ ف ف

خفّ *xaff (i)* /vi/ **1a** to become lighter. *lamma timla balloona hawa txiff* when you fill a balloon with air it gets lighter. **1b** to lessen, diminish in intensity. *kull' ma yikbar id-door yixiff' min ʕalee* the older he gets the milder the fits become. *ʕif-fuvl' xaff* the work has slackened off. ‖*xiff' ʃwayya* take it easy! **1c** to become less dense. *ʕiz-zeet bi-yxiff* the oil thins out. **2** to recover (from an illness). *xaffeet wil-ħamdu li-llaah* I'm better now, praise be to God! — /vt/ **3a** to make lighter. *xiff il-ħiml* lighten the burden. *xiff' ʕiid-ak ʃiwayya* don't use such a heavy touch. ‖*xiff-a-ha tʕuum [prov]* (lighten the ship and it will float) ≈ don't take things too seriously and you'll find they go better. **3b** to make less dense, lighten in consistency. *xiff il-muuna* don't put so much cement in the mortar! **3c** to slacken, take the strain off. *xiff il-ħabl* slacken the rope! **3d** to thin out. *xiff' ʃaʕr-i* thin out my hair! *lamma l-quṭn' yiṭlaʕ bi-yxiffuu* when the cotton comes up, they thin it out. - vn *xaff, xafafaan*; ava *xaafif*; pva *maxfuuf*.

خفّة *xiffa* /n/ **1** lightness. *xiffit ħaraka* agility. ‖*xiffit yadd* (1) manual dexterity. (2) quality of being light-fingered or larcenous. **2** vivacity, jolliness, light-heartedness. **3** silliness, fatuousness.

خفّيّة *xiffiyya* = *xiffa*. ‖ *ʕir-rizq' yħibb il-xiffiyya [prov]* ≈ making a living needs a quick mind.

خفّافة *xafaafa* = *xiffa*.

خفيف *xafiif* /adj pl *xufaaf*/ **1** light (in weight). *xafiif zayy ir-riiʃa* light as a feather. *ʃumaaf xafiif* light-weight material. *lams' xafiif* a light touch. ‖ *ʕiid-u xafiifa* (1) he's dexterous. (2) he's light-fingered, he's larcenous. - *damm-u xafiif* he has a cheerful disposition, he's cute. - *ʃalb-u xafiif* he's easily startled, he's timid. - *ʕaʃl-u xafiif* he's feather-brained. - *rabb-i-na yigʕal ik-kalaam xafiif ʕala ʃalb-u-hum* ≈ may the spirits not be offended by our words (a formula pronounced during the *zaar*). - *ʕil-mutoor xafiif [auto]* the engine is losing compression. **2** simple, not complex. *ʕil-masʕala di xafiifa* this is a simple problem. *musiiqa xafiifa* light music. **3** small in quantity or extent, meagre. *faʕr-u xafiif* his hair is sparse. *ʕif-fuvl il-yomeen dool xafiif* there's not much work these days. *ʕiddii-ni ṭabaʃ fuul zeet xafiif* give me a plate of broad beans without much oil! *ziyaara xafiifa* a brief visit. **4** dilute, weak, thin or light in consistency. *ʃaay xafiif* weak tea (i.e. tea made without many leaves). *ʕarḍ' xafiifa* poor soil.

خفيّف *xifayyif* = *xafiif*.

أخفّ *ʕaxaff* /el/ lighter/lightest, etc.

خفّاف *xaffaaf* /n/ pumice. *ʕil-ħagar il-xaffaaf* pumice stone.

خفّافي *xaffaafi* /adj invar/ **1** lightish. *ʕuzuuma ʕeeh - di ʕakla xaffaafi bass* what do you mean, a feast? this is just a light snack! **2** easy-going, pleasant.

اتخفّ *ʕitxaff* /vi/ passive of *xaff* 3. - iva *mitxaff*.

خفّف *xaffif* /vt/ **1a** to make lighter. *xaffif-ha - miʃ ʃaadir ʕaʃil-ha* make it lighter; I can't carry it. ‖*xaffif damm-ak* ≈ don't be a drag! **1b** to lighten the consistency of, dilute. *xaffif il-buuya* thin the paint! **1c** to reduce in amount or extent. *xaffif huduum-u* he put on lighter clothing. *xaffif il-malḥ' fil-ʕakl* put less salt in the food. *xaffif il-ʕignaab* trim the edges. **1d** to slacken, take the strain off. *xaffif-lu s-surʕ' ʃwayya* give him a looser rein! **2** to cure. *ʕid-dawa xaffif-ni* the medicine cured me. - vn *taxfiif*; ava/pva *mixaffif, muxaffaf*.

اتخفّف *ʕitxaffif* /vi/ passive of *xaffif*. - iva *mitxaffif*.

استخفّ *ʕistaxaff* /vt/ **1** to consider light or easy. ‖ *ʕistaxaffit ʕaʃl-u* she considered him a fool. - *ʕana ma-b-astaxaff'-ʃ damm-u* I don't consider him pleasant. **2** to select for lightness or easiness. - vn *ʕistixfaaf*; ava *mistixiff, mistaxaff*.

¶ *ʕistaxaff' bi-* to take lightly, treat with contempt. *ma tistaxiff'-ʃ bi-ʕaʃl-i* don't take me for a fool! *bi-yʕamil-ni b-muntaha l-istixfaaf* he treats me most contemptuously.

² خ ف ف

خفّ *xuff* /n pl *xifaaf, ʕaxfaaf*/ **1** slipper. ‖*rigiʕ bi-xuffay ħuneen* he returned empty-handed. **2** hoof (of a camel). *ʕilli tiʕmil-u n-namla f-sana yaxd-u g-gamal fi-xuff [prov]* what an ant accumulates in a whole year a camel can destroy in one kick ≈ people's capabilities differ.

¹ خ ف ق

خفق *xafaq (u)* **1** /vt/ to beat, whip (a liquid). *xafaqit il-beeḍ ʕaʃaan it-turta* she beat the eggs for the cake. **2** /vi/ to palpitate (of the heart). *xafaqaan fil-ʃalb* heart palpitations. - vn *xafq, xafaqaan*; ava *xaafiq*; pva *maxfuuq*.

اتخفق *ʕitxafaq* /vi/ to be beaten together. - iva *mitxafiq*.

انخفق *ʕinxafaq* = *ʕitxafaq*. - iva *minxafiq*.

² خ ف ق

خفق *xaffaq* /vt/ to plaster over (a wall). - vn *taxfiiq*;

ava/pva *mixaffaq*.

اتخفّق *ʔitxaffaq* /vi/ to be plastered over (of a wall). - iva *mitxaffaq*.

خ ف ى

خفى *xifi (a)* /vi/ *[derog]* to disappear, vanish, buzz off. *ɛamal ɛamlit-u w-xifi* he did his dirty work and beat it. - vn *xafayaan*.

خفى *xafa[1] (i)* /vt/ to hide, conceal. *xafa f-fanṭa* he hid the bag. || *ʔinta ya maxfi* you wretch! - *ṭaqiyyit il-ʔixfa* magic cap supposed to render its wearer invisible. - vn *xafy, ʔixfa*; ava *xaafi*; pva *maxfi*.

خفية *xifya* **1** /n/ *[rur]* agricultural land obtained when canals are filled in or roads dug up and unofficially annexed to neighbouring plots. **2** /adv/ secretly, covertly. *saafir xifya* he left unannounced.

خفى *xifa, xafa[2]* /n/ secrecy, hiddenness. *fil-xifa* in secret, as in *ʔil-muxaddaraat bi-titbaaɛ fil-xifa* drugs are sold clandestinely.

خفى *xafi* /adj/ hidden. *ʔil-ɛilm il-xafi* occult knowledge, esoteric knowledge.

خفىّ *xafiyy* /n/ Hidden One (epithet of God). *ya xafiyy il-ʔalṭaaf* O Thou of Hidden Graces!

اتخفى *ʔitxafa* /vi/ to be hidden, be concealed. - iva *mitxifi*.

انخفى *ʔinxafa* = *ʔitxafa*. - iva *minxifi*.

اختفى *ʔixtafa* /vi/ to disappear. *ʔil-walad ixtafa mil-beet* the kid disappeared from the house. - vn *ʔixtifa*; ava *mixtifi*.

اتخفّى *ʔitxaffa* /vi/ to become disguised, disguise oneself. - ava *mitxaffi*.

استخفى *ʔistaxfa* /vi/ to hide. *ʔistaxfu min in-naas wi-nisyu ʔinn[i] rabb-i-na ʃayif-hum* they hid from people, but forgot that God sees them. -ava *mistaxfi*.

استخفّى *ʔistixaffa↓, ʔistaxaffa↓* /vi/ to hide. - ava *mistaxaffi*.

خ ل ا ج

خلاجى *xulaagi* /n pl *-yyaat*/ *[Chr]* prayer book usually containing the three Coptic liturgies.

خ ل ب [1]

خلبة *xulba* /n pl *xulab*/ **1** *[rur]* bundle, bunch. **2** *[text]* skein.

خ ل ب [2]

خلاب *xallaab↑* /adj */ fascinating, captivating. *gamaal xallaab* captivating beauty. *manẓar xallaab* a fascinating scene.

مخلب *maxlab* /n pl *maxaalib*/ paw.

خ ل ب ص

خلبص *xalbaṣ* /vi/ **1** to tattle, tell tales, fib. **2** to fabricate, make up stories. **3** to philander, be lecherous. — /vt/ **4** to mix up, make a mess of. - vn *xalbaṣa*; ava/pva *mixalbaṣ*.

خلبوص *xalbuuṣ* /n *xalabiiṣ*/ **1** tattler, one who tells tales behind others' backs. **2** philanderer, lecher.

اتخلبص *ʔitxalbaṣ* /vi/ passive of *xalbaṣ*. - iva *mitxalbaṣ*.

خ ل ب ط

خلبط *xalbaṭ* /vi/ **1** to cause trouble maliciously. *maṭraḥ ma yruuḥ yixalbaṭ been in-naas* wherever he goes he sets people at odds with one another. — /vt/ **2** to confuse. *ʔinta xalbaṭt-i-na bil-qiṣaṣ bituuɛ-ak* you've confused us with your stories. - also *laxbaṭ*. - vn *xalbaṭa*; ava/pva *mixalbaṭ*.

اتخلبط *ʔitxalbaṭ* /vi/ to be or become confused. - iva *mitxalbaṭ*. .

خ ل ج [1]

خليج *xaliig* /n pl *xilgaan, xulgaan*/ gulf, bay. *xaliig is-siwees* the Gulf of Suez. *ʔil-xaliig il-ɛarabi* the Arabian Gulf. || *(tirɛit) il-xaliig (il-maṣri)* an ancient canal which, until filled in in the middle of the nineteenth century, ran north-east across Cairo from its starting point on the Nile opposite Roda Island. *(faariɛ) il-xaliig* a street, known also as Port Said Street, running along part of the filled canal. *fumm il-xaliig* a district opposite Roda Island, at the beginning of the ancient canal.

خ ل ج [2] see خ ل ا ج : *xulaagi*

خ ل خ ل

خلخل *xalxil* /vt/ **1** to loosen the several parts of, cause loss of cohesion in. *sinna mxalxila* a loose tooth. **2** to displace, cause turbulence in (air). - vn *xalxala*; ava/pva *mixalxil*.

خلخال *xulxaal* /n pl *xalaxiil*/ anklet.

اتخلخل *ʔitxalxil* /vi/ passive of *xalxil*. - vn *taxalxul*; iva *mitxalxil*.

تخلخل *taxalxul* /n/ turbulence.

خ ل د

خالد *xaalid* /adj */ immortal, eternal. *ẓikra xalda* an undying memory.

خلّد *xallid* /vt/ to immortalize. - vn *taxliid*; ava/pva *mixallid*; pva *muxallad↑*.

اتخلّد *ʔitxallid* /vi/ to be immortalized. - iva *mitxallid*.

خ ل س

اختلس ʔixtalas /vt/ to embezzle. -vn ʔixtilaas; ava mixtilis; pva muxtalasˀ.

اختلاس ʔixtilaas /n pl -aat/ misappropriation, embezzlement.

مختلس muxtalis /n */ embezzler.

خ ل ص

خلص xiliṣ¹ or xuluṣ (a) /vi/ **1** to come to an end, be finished. ʔiz-zeet xiliṣ there's no oil left. ʔil-ḥafla xilṣit the party came to an end. **2** to make an end. ʔixlaṣ baqa have done! that's enough out of you! niʒmil qurʒa w-nixlaṣ let's toss up and have done! ma-tiftaḥ-ʃ il-mawḍuuʒ laḥsan ma-nixlaṣ-ʃ don't open the subject or we'll never hear the end of it. **3** to become exhausted. xiliṣt' mis-sillim the stairs tired me out. **4** to save oneself. ʔixlaṣ bi-ʒumr-ak run for your life! **5** to obtain clearance. ʔil-biḍaaʒa xilṣit min ig-gumruk the goods have been cleared through customs. -vn xalaṣaan, xuluuṣ; ava xaaliṣ, xalṣaan.

خلوص xuluuṣ /n/ *[mech]* clearance. ʔil-xuluuṣ been il-bistim wis-silindar the clearance between the piston and the cylinder.

خالص xaaliṣ /adj */ **1a** unmixed, pure. dahab xaaliṣ pure gold. **1 b**ˀ pure, true, sincere. ʔid-diin il-xaaliṣ the true religion. duʒaaʔ xaaliṣˀ true prayer, prayer from the heart. **2** free, clear. ʔil-muxṭaaf xaaliṣ the anchor's up. ‖gittit-ha miʃ xalṣa her body is possessed by a demon. -ʔinti xalṣa you are divorced! I divorce you! **3** paid-for in full. ʔil-ḥisaab xaaliṣ the bill is paid off. **4** finished, completed, ʔiʃ-ʃuɣl' xaaliṣ the work is completed. — /adv/ **5** very, extremely. wiḥiʃ xaaliṣ very bad. **6** completely, thoroughly. xallaṣt' xaaliṣ I've finished completely. ʔiṭfi n-naar lamma l-xuḍaar yistiwi xaaliṣ turn off the heat when the vegetables are thoroughly done. **7** at all, ever. ma-ʃuft'-ʃ ḥaaga xaaliṣ I didn't see anything at all. ma-tkallim-uu-ʃ xaaliṣ don't talk to him ever!

خلص xiliṣ² /adj */ sincere, truthful. tiḥiss' kida min kalaam-u ʔinnu miʃ xiliṣ you feel somehow from the way he talks that he is not straightforward. ‖damm-u miʃ xiliṣ he's crooked.

أخلص ʔaxlaṣ¹ /el/ more/most sincere.

خلاص xalaaṣ¹ /n/ **1** deliverance, salvation. kaan xalaaṣ-u ʒala ʔiid-i his deliverance was at my hands. ‖ʃuuf (or ʔiʒraf) xr aaṣ-ak look to your own ends, look after yourself. ˀ /pl -aat/ placenta, afterbirth.

خلاص xalaaṣ² **1** adverb indicating finality ≈ once and for all. gittit-i nhaarit xalaaṣ my body is in a state of complete collapse. hiyya xalaaṣ baqit kiwayyisa she's become a good girl now. ʔiʃ-ʃams' nizlit xalaaṣ the sun's gone down now. m-ana xalaaṣ iʃtareet waaḥid I've already bought one. ʔana xalaaṣ ʔakalt (thanks) but I've had enough to eat. **2** /interj/ that's it! so much for that! xalaaṣ - ʔilli faat maat that's settled then, we'll let bygones be bygones. xalaaṣ - ʔana mwaafiq OK, I agree. xalaaṣ ya siid-i ma-tizʒal-ʃ never mind, old chap, don't get upset. xalaaṣ qarrabna - baqeena f-banha the journey's almost over now - we've got as far as Benha. yibqa xalaaṣ baqa that's it then, it's settled then. ‖wi-xalaaṣ (1) that's just the way it is, there's no argument about it, as in ʔahu huwwa lli tʒayyin wi-xalaaṣ he's the one who got the job and there's nothing to be done about it, ʔahu ʔana qult' kida w-xalaaṣ that's what I've decided and there are no two ways about it. (2) just to get it over with, rakkibii-lu ʔayy' zuraar wi-xalaaṣ just fix any old button on it.

خلاصة xulaaṣa /n/ essence, most important part. xulaaṣit il-mawḍuuʒ what the subject boils down to.

خليص xileeṣ: ṭiliʒ min darb' xleeṣ ≈ he escaped (death) by a miracle.

خلّص xallaṣ /vt/ **1** to finish, bring to an end. xallaṣt' ʃuɣl-i badri I finished my work early. **2a** to rid, free. di ḥa-txallaṣ il-beet min iṣ-ṣaraṣiir this will rid the house of cockroaches. rabb-i-na yxallaṣ-na minkum may Our Lord rid us of your presence! ‖xallaṣ ḍamiir-u he cleared his conscience. -ḥ-axallaṣ-lak taar-ak I will avenge you. **2b** to free from the marriage bond, divorce. **2c** /impers/ it is acceptable to, meets with the approval of. yixallaṣ-ak (ʔinn-ak) tihazzaʔ-ni ḍuddaam in-naas di kull-a-ha do you think it's right of you to mock me in front of all these people? laʔ ma-yxallaṣ-nii-ʃ ʔana mutʔassif no, I don't think it's right, I'm sorry. **3** to separate, disengage. ʔil-buliiṣ ga xallaṣ-hum min baʒḍ the police came and broke up the fight. ‖ma-ynuub il-mixallaṣ ʔilla taqṭiiʒ hiduum-u *[prov]* the (would-be) peace-maker only gets his clothes torn. **4** to save, rescue. xallaṣ-ni mil-warṭa di get me out of this fix! **5** to expedite a matter or job for (s.o.). xallaṣ-ni baqa ʒaayiz ʔamfi finish what you're doing for me - I want to leave! **6** to obtain clearance for. — /vi/ **7** to be finished, be through. kallim-ni lamma txallaṣ give me a call when you're finished (with what you have in hand). -vn taxliiṣ; ava/pva mixallaṣ.

¶ xallaṣ ʒala (1) to exterminate, as in xallaṣu ʒala l-ʒaṣafiir they exterminated the birds, ḍaruuri nxallaṣ ʒalee qabl' ma ykallim il-buliiṣ we must do him in before he talks to the police. (2) to finish off, as in xallaṣ

ɛal-ɛeef min ɤeer ma yistanna l-laḥma he polished off the bread without waiting for the meat.

مخلّص *mixallaṣ* /adj */ resourceful, capable.

مخلّص *muxalliṣ* /n/ **1** = *mixallaṣaati*. **2** *[Chr]* Saviour (epithet of Jesus Christ).

مخلّصاتي *mixallaṣaati* /n pl *-yya*/ one who, for remuneration, facilitates the clearance of goods from customs, or of papers through the bureaucracy.

اتخلّص ʔitxallaṣ /vi/ **1** to rid oneself. *fii ɛadaat fi-balad-na laazim nitxallaṣ minha* there are customs in our country of which we must rid ourselves. **2** (impersonal) passive of *xallaṣ*. *ʔil-ʔakl itxallaṣ ɛalee* the food was finished off. *ʔil-biḍaaɛa txallaṣ ɛaleeha min ig-gumruk* the goods were cleared through the customs. - ava/iva *mitxallaṣ*.

أخلص ʔaxlaṣ[2] /vi/ to be faithful, loyal, be sincere. *ḥ-axliṣ-lik ṭuul il-ɛumr* I'll be faithful to you all my life. *muwaaṭin muxliṣ li-blaad-u* a citizen loyal to his country. - vn *ʔixlaaṣ*; ava *muxliṣ*.

استخلص ʔistaxlaṣ /vt/ **1** to deduce. *ʔistaxlaṣt*[i] *min kalam-ha ʔinnaha mif ɛayza* I deduced from what she said that she wasn't interested. *ʔistaxlaṣ in-natiiga* he drew the conclusion. **2**↑ to extract. *ʔistixlaaṣ iz-zeet min bizr il-ɋuṭn* the extraction of oil from cotton seed. - vn *ʔistixlaaṣ*; ava *mistaxlaṣ*.

خ ل ط

خلط *xalaṭ (i)* /vt/ to mix, blend. *bi-nixliṭ-u ɛal-mayya* we mix it with the water. *ḥaʃiif maxluuṭ* adulterated hashish. ‖ *bi-yixliṭ fik-kalaam* he raves, he speaks nonsense. - vn *xalṭ*; ava *xaaliṭ*; pva *maxluuṭ*.

خلط *xalṭ* /n/ **1** (radio) interference, static. **2** nonsense.

خلطة *xalṭa* /n pl *-aat*/ mixture. *ʔil-xalṭa btaaɛit il-maḥʃi* the mixture for the stuffed vegetables. ‖ *ruzz*[i] *bil-xalṭa* rice with raisins, pine-nuts and spices; oriental rice.

خلط *xilṭ* /n/ *[rur]* straw and vegetable debris. ‖ *ṭiin xilṭ* mixture of straw etc. and mud used for making bricks, daub etc.

خليط *xaliiṭ* /n/ combination, mixture. *ʔin-niẓaam xaliiṭ min il-iftirakiyya wir-raʔsimaliyya* the system is a combination of socialism and capitalism. ‖ *ɛeef xaliiṭ* bread of wheat and maize flour.

خلّاط *xallaaṭ* /n pl *-aat*/ **1** mixing machine, blender (for food, cement). **2** mixer, tap that blends hot and cold water. **3** mixing head (of a welder's torch).

اتخلط ʔitxalaṭ /vi/ to be mixed, be blended. *ʔil-xarasaana ɛbaara ɛan raml*[i] *w-ʔasmant*[i] *w-zalaṭ wi-mayya b-yitxilṭu maɛa baɛḍ* concrete consists of sand, cement, gravel and water mixed together. - iva *mitxiliṭ*.

انخلط ʔinxalaṭ = ʔitxalaṭ.

خلّط *xallaṭ* /vt/ to mix thoroughly, blend thoroughly. *xallaṭ-ha bit-turaab* he mixed it thoroughly with the earth. - vn *taxliiṭ*; ava/pva *mixallaṭ*.

مخلّط *mixallaṭ* /adj */ cross-bred, hybrid.

اتخلّط ʔitxallaṭ /vi/ to be thoroughly mixed or blended. - iva *mitxallaṭ*.

اختلط ʔixtalaṭ /vi/ **1** to mix, mingle, socialize. *ma-bi-yḥibbuu-ʃ yixtilṭu b-ḥadd* they don't like to mix with anyone. **2** to become confused, get in a mess. *ʔixtalaṭ ɛalayya l-ʔamr* I was at a loss to understand the matter. - vn *ʔixtilaaṭ*; ava *mixtiliṭ*.

مختلط *muxtalaṭ* /adj/ mixed. *madrasa muxtalaṭa* a coeducational school. *ʔil-maḥaakim il-muxtalaṭa [obsol]* the mixed courts.

خ ل ط ب

خلطبيصة *xalṭabiiṣa* /n/ huge mess, chaotic situation.

خلطبيطة *xalṭabiiṭa* = *xalṭabiiṣa*.

خ ل ع

خلع *xalaɛ (a)* /vt/ **1** to pull out, extract. *ʔixlaɛ il-watad mil-ʔarḍ* pull the peg out of the ground! *ruḥt*[i] *ʔaxlaɛ sinaan-i* I went to have my teeth pulled. ‖ *bi-xalɛ id-dirs* with the greatest effort, as in *xadnaa-ha minnu b-xalɛ id-dirs* we got it from him only with the greatest difficulty. **2a** to rip off, tear off, dislocate. *xalaɛt il-ɋamiiṣ min ɛalee* I ripped the shirt off him. *ʔil-baab maxluuɛ* the door is off its hinges. **2b** to give (s.o.) a jolt of sudden anxiety, disquiet etc. *xalaɛt-i-ni bil-xabar da* you really shook me with that news. — /vi/ **3** to get away, take oneself off. *xalaɛt*[i] *minhum bil-ɛafya* I managed to get free of them with great difficulty. *ma-tixlaɛ madaam if-fuɤl*[i] *xilaṣ* you get along now that the work is finished. - vn *xalɛ*; ava *xaaliɛ*; pva *maxluuɛ*.

خلاعة *xalaaɛa*↑ /n/ indecency, immodesty.

خليع *xaliiɛ*↑ /adj */ **1** indecent, immodest. *bint*[i] *xaliiɛa* an immodest girl. *fustaan xaliiɛ* an indecent dress. **2** /invar/ *[rur]* second-hand. *gazma xaliiɛ* second-hand pair of shoes.

اتخلع ʔitxalaɛ /vi/ **1** to be pulled out, be extracted. **2** to be detached, be dislocated. *kitf-i txalaɛ* my shoulder was dislocated. ‖ *ɋalb-i txalaɛ mil-xoof* I was unnerved by fear. - iva *mitxiliɛ*.

انخلع ʔinxalaɛ = ʔitxalaɛ. - iva *minxiliɛ*.

خلع *xallaɛ* /vt/ **1** to unhinge, dislocate. *xallaɛ kull*[i] *ʔabwaab il-beet* he took all the doors of the house off their hinges. **2** to pull, extract (teeth, fingernails etc.). — /vi/ **3** to become loose or rickety. *ʔil-ɛarabiyya*

xallaɛit mil-maṭabbaat the car became rickety because of the bumps. *baab in-naggaar mixallaɛ [prov]* ≈ the cobbler's children are ill-shod. - vn *taxliiɛ*; ava/pva *mixallaɛ*.

مخلّع *mixallaɛ* /adj */ exhausted.

اتخلّع *ʔitxallaɛ* /vi/ **1** to be detached, be dislocated. **2** to be pulled out, be extracted. - iva *mitxallaɛ*.

خ ل ف

خلف *xalaf[1] (i)* /vt/ **1** to break, fail to keep. *xalafit il-maɛaad* she broke the appointment. *xalaf kalaam-u* he went back on his word. **2** to provide a compensation for (of God). *rabb-i-na yixlif-u ɛaleek bil-ḥalaal* may God compensate you well for it! (as a condolence to one who has suffered a loss). *ʔil-miɛawwiq mixlif* ≈ God will compensate you (for your loss). — /vi/ **3** to act contrarily. *ʔiż-żuruuf xalafit* things went wrong. - vn *xalafaan, xulf*; ava *xaalif, mixlif*; pva *maxluuf*.

خلف *xalf* /n/ back, rear. *huguum mil-xalf* an attack from the rear.

¶ *xalfan* /adv/ to the back, to the rear. *xalfan dur* about turn!

خلفى *xalfiˆ* /adj */ **1** rear, hind, back. *ʔil-baab il-xalfi* the back door. **2** to the rear, backward. *ṿaṭsa xalfiyya* a backward dive.

خلفيّة *xalfiyyaˆ* /n pl *-aat*/ background. *ʔil-xalfiyya s-saqafiyya* the cultural background.

خلف *xilf: xilf' xlaaf* pointing in opposite directions, head to toe, back to back. *ʔis-sardiin mitraṣṣ' xilf' xlaaf* the sardines are arranged head to tail. *kull' dikkiteen xilf' xlaaf* each pair of benches is back to back.

خلف *xilfa* /coll n/ **1** offspring, children. ‖*xilfit ɛafariit* a naughty child. **2a** second growth (of a crop). **2b** new shoot (of a plant).

خلف *xalaf[2]* /coll n/ children, off-spring, descendants. *ʔil-xalaf wis-salaf* descendants and ancestors. *xayru xalaf li-xayri salaf* like (good) father, like (good) son.

خلاف *xilaaf* **1** /n pl *-aat*/ **1a** difference, disparity. **1b** disagreement, difference of opinion. **2** (also *bi-xlaaf*) /prep/ besides, over and above, in addition to. *ʔana dafaɛt' ɛiʔriin gineeh naqd' (bi-)xlaaf il-ḥagaat illi ʃtaret-ha* I paid twenty pounds cash quite apart from the things I bought.

¶ *wi-xlaaf-u* et cetera, and so on.

خلافة *xilaafa* /n/ **1** Caliphate. **2** successorship in a Sufi order.

خليفة *xaliifa* /masc n pl *xulafa*/ **1a** successor. **1b** successor of the founder of a Sufi order. **2** Caliph.

خلّف *xallif* /vt/ **1** to beget or bear (offspring). *ɛaawiz yitgawwiz wi-yxallif ʔawlaad* he wants to get married and have children. *xallifit ɛayyil waaḥid* she had one child. **2** to leave behind, bequeath. *ʔil-ḥubb' xallif-li l-ɛaẓaab* love left me with torment. - vn *xilfa, xalaf*; ava/pva *mixallif*.

تخاليف *taxaliif* /pl n/ offspring. ‖*ʔumm it-taxaliif* cramp in the region of the womb occurring after childbirth.

مخلّفات *muxallafaat* /pl n/ **1** things left behind. *muxallafaat ig-geef il-ʔingiliizi* the (saleable) material left behind by the British army. **2** byproducts. *muxallafaat il-ṿilaal* cereal by-products.

اتخلّف *ʔitxallif* /vi/ **1** to fail, fall short, under-achieve. *ʔitxallif ɛan il-ḥuḍuur* he failed to come. *ʔitxallif ɛan it-tagniid* he failed to report for military service. *midd' laḥsan nitxallif ɛan maɛaad il-ɋaṭr* hurry up or we'll miss the train. **2** to fall behind, regress. *ʔil-bint itxallifit ɛan il-magmuuɛ wi-taahit* the girl fell behind the group and got lost. *ʔil-balad itxallifit* the country regressed. **3** to be born. *ʔitxallif-lu walad mig-gawaaz il-ʔawwalaani* he had a child by the first marriage. - ava/iva *mitxallif*.

متخلّف *mutaxallif* /adj */ **1** underdeveloped. *bilaad mutaxallifa* underdeveloped countries. *ɛayyil mutaxallif* a retarded child. **2** *[acad]* allowed to carry a maximum of two failed subjects over into next year (of a university student).

خالف *xaalif* /vt/ **1** to go against, act contrary to. *xaalif il-ʔamr* he disobeyed the order. *ʔana b-axalf-ak fir-raʔy' da* I oppose you in that opinion. *xaalif tuɛraf [prov]* go against (convention) and you'll get known. ‖*ʃiriik mixaalif* one who is always disagreeing. **2** *[leg]* to impose a fine or penalty on (s.o.) for a misdemeanour. - vn *mixalfa*; ava *mixaalif*.

مخالفة *muxalfa* /n pl *-aat*/ **1** transgression, violation. **2a** *[leg]* misdemeanour. **2b** traffic violation. **3a** fine or penalty (for a misdemeanour). **3b** traffic ticket.

اتخالف *ʔitxaalif* /vi/ **1** to have a dispute, differ with one another. **2a** to be disputed. **2b** to be disobeyed. **3** *[leg]* to have a fine or penalty (for a misdemeanour) imposed upon one. - ava/pva *mitxaalif*.

اختلف *ʔixtalaf* /vi/ **1** to differ, be different, vary. *ṭalabaat iz-zabaayin bi-tixtilif* the customers' requests vary. *bi-yixtilif ɛadad-ha bi-xtilaaf il-markib* their number varies according to the type of ship. *kull' suuq muxtalif ɛan it-taani* every market differs from the next. ‖*ɛala ʔixtilaf-hum* according to their various types, as in *ʔil-muhandisiin ɛala xtilaf-hum* all the various sorts of engineers. **2** to differ in opinion, disagree. *madaam ixtalafna niɛmil tagriba* since we disagree we'll make a test. - vn *ʔixtilaaf*; ava *muxtalif, mixtilif*.

اختلاف *ʔixtilaaf* /n pl *-aat*/ difference.

خ ل ف ن

خلفن *xalfin* /vt/ to confuse, muddle, entangle. *ʔil-quṭṭa xalfinit bakarit il-xeeṭ* the cat tangled up the spool of thread. *ḥaṣal xalfana fil-ḥikaaya* there was chaos and confusion in the matter. - also *laxfin*. - vn *xalfana*; ava/pva *mixalfin*.

اتخلفن *ʔitxalfin* /vi/ to be confused, be muddled, be entangled. - iva *mitxalfin*.

خ ل ق

خلق *xalaq (a)* /vt/ to create. *wi-lli xalaq il-xalq* by the Creator of creation! (an oath indicating anger). *di ʒamaliyya ṣnaʒiyya ma-fi-haa-ʃ xalq* this is an industrial process with nothing creative about it. ‖*ya mawlaay ka-ma xalaqt-i-ni* (O Lord, I am as you created me) ≈ I am reduced to penury, I have nothing left. - *ʔil-xaaliq in-naaṭiq* ≈ the spit and image, as in *da l-xaaliq in-naaṭiq ʔaxuu* he's the spit and image of his brother. - vn *xalq*; ava *xaaliq*; pva *maxluuq*.

الخلق *ʔil-xalq* /n/ **1** creation, the created universe. ‖*siib il-xalqʿ lil-xaaliq* (leave creation to the Creator) ≈ what others do is none of our business. - *wa-li-llaahi* (or *luu*) *fi-xalq-i-hi ʃuʔuun* ≈ God makes them all types! people are odd! **2** /fem and pl/ people. *ʔil-xalq illi sakniin gambiina* the people living next to us. *fiqlu yitqatlu maʒa baʒḍʿ l-ḥaddʿ ma l-xalqʿ tlammit* they went on fighting till people gathered around. ‖*ya xalq* rhetorical appeal for help, witness etc., addressed to no one in particular (cf *ya naas*). - *zayy il-xalq* like everyone else, as in *ʔiʒmil zayy il-xalq* - *laazim tifizz* behave normally - do you have to be different? - *baab il-xalq* a square in north-east Cairo.

خالق *xaaliq* /n/ **1** Creator, Maker (epithet of God). **2** creator, designer, inventor. ‖ *ʔil-xaaliq in-naaṭiq* see *xalaq*.

مخلوق *maxluuq* /n pl *maxaliiq, maxluqaat*/ creature, created being.

خلق *xulq* **1** /n pl *ʔaxlaaq*/ disposition, temper. *xulq-u dayyaq* (or *ṣaʒb*) or *ʔaxlaaq-u dayyaqa* (or *ṣaʒba*) he's quick-tempered. ‖*haddi ʔaxlaaq-ak* (or *xulq-ak*) calm down! - *ʈallaʒ ʔaxlaaq-u fiyya* he vented his rage on me. **2** *ʔaxlaaq* /pl n/ **2a** character, nature. *ʔaxlaaq-ak kiwayyisa* you're a decent sort. **2b** morals, manners. *gayyʿ tiddii-ni darsʿ fil-ʔaxlaaq* you're going to teach me manners?

خلقة *xilqaʿ* /n/ **1** creation. *ʔana xilqit rabb-i-na zayyi zayyak* I am God's creation (too, so) I'm as good as you are! **2** /pl *xilaq*/ **2a** face, physiognomy. **2b** ugly mug. **3** *[euphem]* penis.

خلقة *xilqa*[2] /adv/ already, as it is. *ʒammaal bi-yiddii-ni f-fuɤlʿ w-ʔana maʃɤuul xilqa* he keeps giving me more work when I'm already busy.

خلقة *xalaqa* /n pl *-aat*/ **1** rag. **2** (the only) garment one owns. - *xalaqaat* /pl n/ **3** *[non-Cairene]* clothes.

خلقي *xilaqi, xulaqi* /adj */ quick-tempered.

خليقة *xaliiqa* /n/ creation. *min ʔawwil il-xaliiqa l-ḥaddʿ dilwaqti* from the beginning up to now.

خلايق *xalaayiq* /pl n/ people. *siib il-xalaayiq fi-ḥal-ha* leave people to their own affairs.

خلاّق *xallaaq, xallaaqʿ* /n/ **1** Creator (epithet of God). **2** /adj */ creative. *fannaan xallaaq* a creative artist.

اتخلق *ʔitxalaq* /vi/ to be created. *ʔil-bani ʔaadam itxalaq min ʈiin* Man was created from clay. ‖ *ʔitxalaqtʿ fiṭ-ṭurfi* I was born in the pickle trade. - iva *mitxiliq*.

انخلق *ʔinxalaq* = *ʔitxalaq*. - iva *minxiliq*.

خلّق *xallaq* /vt/ **1** to put together from bits and pieces, make up. *xadit il-biluzaat il-qadiima w-xallaqit minha fustaan* she took the old blouses and made up a dress out of them. **2** *[chem]* to synthesize. - vn *taxliiq*; ava/pva *mixallaq*.

اتخلّق *ʔitxallaq* /vi/ **1** to be put together from bits and pieces, be made up. **2** *[chem]* to be synthesized. **3** to lose one's temper. *tikallim-u duɤri yitxallaq* the moment you speak to him he flies into a rage. - ava/iva *mitxallaq*.

خ ل ل [1]

خلّ *xall* /n/ vinegar. ‖*xallaa-ha xall* he went too far, he overstepped the mark.

خلاّت *xallaat* /pl n/ acetate. *xallaat ir-ruṣaaṣ* acetate of lead.

خلّل *xallil* **1** /vt/ to pickle, preserve in vinegar or brine. **2** /vi/ to become pickled. *ʔiz-zatuun bi-yaaxud kaam yoom ʒafaan yixallil* how many days do the olives take to become pickled? ‖*xallil fis-sanawiyya l-ʒaamma* he got stuck at the secondary certificate stage, he spent years getting the secondary certificate. - vn *taxliil*; ava/pva *mixallil*.

مخلّل *mixallil* /coll n, pl *-aat*/ pickle(s), pickled vegetable(s).

مخلّلاني *mixallilaati* /n pl *-yya*/ maker and/or seller of pickles.

اتخلّل *ʔitxallil* /vi/ to be pickled, be preserved in vinegar, or brine. - iva *mitxallil*.

خ ل ل [2]

خلّة *xilla* /n/ **1** plant (Ammi visnaga), the seeds of which have medicinal properties and the dried rays of the umbels of which are used as tooth-picks. **2** (also

xilla ʃtaani) Bishop's weed (Ammi majus), the seeds of which have medicinal properties. — /pl *xilal*/ **3** toothpick made from a dried ray of Ammi visnaga.

خلل *xalal* /n/ disorder, defect. *fii xalal fil-makana* the machine is out of order. ‖*ɛandu xalal fil-muxx* he's mentally deranged.

خلل *xulal* /n/ lunacy, craziness. - /adjectivally/ *da raagil xulal* he's a crazy man!

أخلّ *ʃaxall'* /el/ more/most crazy.

خلال *xilaal↑* /prep/ **1** (also *min xilaal*) through. *ʃaaf-ak min xilaal if-ʃibbaak* he saw you through the window. *wiqiɛ min xilaal ṣawabɛ-i* it fell through my fingers. **2** (also *fi-xilaal*) during, within the period of. *xilaal is-sana* during the year. *ɛamalt' ʃeeh fi-xlaal il-ḥarb* what did you do during the war?

مخلول *maxluul* /n pl *maxaliil*/ lunatic.

اتخلّ *ʃitxall* /vi/ to become unbalanced. *ʃitxall' tawazn-u* he lost his equilibrium. ‖*ʃitxall' f-muxx-u* (or *f-ɛaql-u*) he went potty. - ava *mitxall*.

انخلّ *ʃinxall* = *ʃitxall*. - ava *minxall*.

أخلّ *ʃaxall²↑* /vi/ **1** to fail to meet an obligation. *ʃif-firka ʃaxallit bit-taɛaaqud* the company broke the contract. **2** to commit a violation, transgress. *muxill' bif-faraf* dishonourable. *muxill' bil-ʃadab* immoral. - vn *ʃixlaal*; ava *muxill*.

اختلّ *ʃixtall* /vi/ to become unbalanced or upset. *ɛaql-u xtall* his mind became unbalanced. *ʃil-markib tawazun-ha xtall' w-mayyilit* the ship became unbalanced and listed. ‖*xud min it-tall' yixtall [prov]* (take from the hill and it will topple) ≈ wealth can be squandered gradually as well as quickly. - ava *mixtall*.

خ ل ل ³

خلّ *xill* /n pl *xillaan*/ close friend, intimate.

خليل *xaliil* /n/ lover.

خليلة *xaliila* /n/ mistress, female lover.

خ ل ل ⁴

خلول *xuluul: ʃumm il-xuluul* /coll n/ mussel(s). ‖*ʃakal bi-ɛaql-i ʃumm il-xuluul* he fooled me.

خ ل م س

خلمس *xalmis* /vi/ **1** to doze, doze off. **2** *[coarse slang]* to make love (to a woman), have it off (with a woman). - vn *xalmasa*; ava/pva *mixalmis*.

خ ل ن ج

خلنجان *xilingaan, xulingaan* /n/ briar root.

خ ل و ¹

خلاوة *xilaawa* <perh Copt> /n pl *-aat*/ rope, joined to a tow rope, that the tower of a boat wraps around his torso.

خ ل و ² see ¹ خ ل ى : *xiliww, xuluww, xilwa, xalwati*

خ ل ى ¹

خلى *xili (a)* /vi/ to become empty, become clear. *ɛaayiz yiṭaffif-ni ɛafaan ig-gaww' yixlaa-lu* he wants to get rid of me so that he can do as he pleases. ‖*ɛalb-u xaali* he's not in love, he's fancy-free. - *baal-u xaali* he's carefree. - vn *xiliww, xuluww*; ava *xaali*.

¶ *xili bi-* to take (s.o.) aside, be alone with (s.o.). *ʈuul il-waɛt' w-huwwa ɛaayiz yixla bil-bint* all day long he's been wanting to be alone with the girl.

خلى *xala¹ (i)* /vt/ **1** to empty, clear. *xalu l-beet min is-sukkaan* they cleared the house of tenants. ‖*xala nafs-u min il-masʃuliyya* he disclaimed the responsibility. - *xala ʈ-ʈaraf [leg]* to clear oneself of claims against one (e.g., a former employer). - *xala sabiil-u* he set him at liberty. **2** to bone, remove the bones from. *ḥamaam maxli* boned pigeons. - vn *xiliww, xuluww*; ava *xaali*; pva *maxli*.

¶ *xala bi-* to let down. *ḥa-yixli biik waɛt iz-zanɛa* he will let you down at the time of need.

خلّو *xiliww, xuluww* (also *xiliww' rigl*) /n pl *-aat*/ key-money.

خوالى *xawaali: ʃil-ʃayyaam il-xawaali* ≈ the good old days, the days of carefree fun.

خلوة *xilwa* /n pl *-aat, xalaawi*/ private room (e.g., in a mosque, for meditation, or in a bath-house).

خلوتى *xalwati* /n pl *-yya*/ **1** Sufi practising reclusion and solitary meditation. **2** member of the Khalwati order of Sufis.

خلا *xala²* /n/ openness, open ground. *fil-xala* in the open air.

خليّة *xaliyya* /n pl *xalaaya*/ **1** bees' nest, beehive. **2a** *[biol]* cell. **2b** *[elec]* cell. **2c** cell (in a political organization or the like).

خلّى *xalla* /vt; imper w 2nd pers pl suff *xallii-ku*/ **1** to permit, allow. *xallii-ni ʃadxul* let me in! *rabb-i-na raḥiim ʃinnu xallaa-ki tistaɛbili r-rabiiɛ bi-ɛalb' gdiid* Our Lord is merciful, he has allowed you to meet the spring in a new frame of mind. ‖*xalli ɛannak* let me relieve you of that, let me take that from you. **2a** to cause to be. *xallaa ʃaṣɣar* he made it smaller. *xallaa-ni maskiin* he made me miserable. *xalli f-ɛalb-ak raḥma* have some pity! *ʃaɣayyar ir-ruxṣa w-ʃaxallii-ha bi-sm-i*

I'll change the licence and have it put in my name. *xallii-k nafiiṭ* snap to it! *xallii-k ẓooq* have some manners! **2b** to cause (s.o. to do s.th.). *xalli kull*^{i} *waaḥid yifuuf nafs-u* let each look to himself! *xalli r-rayyis yigiib il-biira* have the waiter bring the beer! *huwwa s-sinn illi bi-yxallii-ha ṭinsa* it's age that makes her forget. *ruuḥ ɛand il-ḥakiim xallii yikfif ɛaleek* go to the doctor and get him to give you an examination. **3** to keep, preserve. *ḥ-axallii-ha ḥtiyaaṭi* I'll keep it as a spare. *xallii-k maɛaaya* hang on! stay with me (while I do something, say something further etc.)! *xallii-k ɛaf-ṭimaal* stay on the left! *xallii-ni ɛal-baal* keep me in mind! ‖*xallii-k* stay where you are! - *xallii-k maɛa llaah* trust in God! - *xallii-k fi-ḥaal-ak* mind your own business! - *xallii f-ḥaal-u* leave him alone! - *xallii ɛal-alla* leave the solution to God! don't worry about it! - *rabb-i-na* (or *ʕallaah) yixallii-k* God preserve you (in thanks for a service, or enquiry after one's health etc.). - *rabb-i-na* (or *ʕallaah*) *yixalli(-hum-lak)* may God preserve your children for you! **4** to leave, leave behind. *xallit-u fil-beet* she left it in the house. ‖*ʃatam-u w-ma-xalla-luu-ʃ* he covered him with insults. - *la xalla wala baqqa* he left nothing unsaid or undone. - *xalla ... bi-ɛafya [women]* good-bye (said by the person leaving), as in *xallenaa-kum bi-ɛafya* we take our leave of you, good-bye. - ava *mixalli*.

اتخلّى ʕitxalla: ʕitxalla ɛan to abandon. *titxalla ɛanni f-ẓuruuf ẓayy*^{i} *di* you'd abandon me in such straits? *diḥik ɛaleeha w-baɛdeen itxalla ɛanha* he made a fool of her and then he jilted her. - ava *mitxalli*.

أخلى ʔaxlaʕ = *xalaʕ*. - vn *ʔixla, ʔixlaaʔ*.

اختلى ʔixtala /vi/ to become alone, be left on one's own. *saaɛit ma tixtili tibki* as soon as she's on her own she starts crying. *ɛaawiz ʔaxtili biik* I want to see you alone. - ava *mixtili*.

استخلى ʔistaxla /vt/ **1** to consider empty. **2** to select for emptiness. - ava *mistaxli*.

¶ *ʔistaxla bi-* to take the opportunity to be alone with (s.o.).

خ ل ى ²

مخلاة *mixla* /n pl *maxaali*/ **1** feed bag, nose-bag. **2** *[mil]* duffel bag.

خ م د

خمد *xamad (i)* /vt/ **1** to cause to be quiet, cause to shut up. *ʔixmidi l-ɛayyil il-maḍruub da* shut that blasted child up! **2** to extinguish, put out. *xamadu s-sawra* they suppressed the revolution. - vn *xamadaan, xamd, xumuud*; ava *xaamid*; pva *maxmuud*.

انخمد ʔinxamad /vi/ **1a** to become quiet, shut up. *ʔil-waad inxamad wi-naam* the kid shut up and went to sleep. *ʔinximid ʔuqɛud* shut up and sit down! **1b** to crash out, sleep from exhaustion. **2** to be extinguished, be put out. - ava/iva *minximid*.

اتخمد ʔitxamad = *ʔinxamad*. - ava/iva *mitximid*.

خ م ر

خمر *ximir* or *xumur (a)* /vi/ to prove, rise (of dough). - vn *xumraan, xamaraan*; ava *xaamir, xamraan*.

خمر *xamr* /coll n, pl *xumuur*/ alcoholic beverages (beer generally excepted).

خمرة *xamra = xamr*.

خمرى *xamri* /adj pl *-yya*/ tawny brown (of complexion).

خمرجى *xamurgi* /n pl *-yya*/ alcoholic, alcohol addict.

خمير *xamiir* /n/ **1** liquorice water. **2** fermented sugar-cane juice.

خميرة *xamiira* /n/ any fermenting agent (e.g., yeast, yoghurt). *xamiirit biira* brewers' yeast. ‖*wiff-u yiqṭaɛ il-xamiira mil-beet* (his face drives the yeast from the house) he's a jinx, he brings bad luck. - *xamiirit il-ɛarab* Colchicum richii (a plant, one of the ingredients of *muxaat*).

خمّارة *xammaara* /n pl *-aat, xamamiir*/ seedy bar, dive.

خمّر *xammar* /vt/ **1** to ferment, leaven. **2** to mix (earth and straw) with water and leave to work till the mixture reaches the right consistency for making bricks or daub. **3** to temper (metal). **4** to blend, mix well. — /vi/ **5** to ferment. **6** to improvise poetry. - vn *taxmiir*; ava/pva *mixammar*.

اتخمّر ʔitxammar /vi/ passive of *xammar*. - iva *mitxammar*.

اختمر ʔixtamar /vi/ to ripen, mature. *ʔil-fikra xtamarit fi-muxx-i* the idea ripened in my mind. - ava *mixtimir*.

خ م س

خمسة *xamsa*^{1} /num: in absol state, in apposition, or w foll n sing in contexts of ordering and itemizing; pl *-aat*/ five. *miyya w-xamsa bass* one hundred and five only. *humma xamsa wi-ḥna talaata* they are five and we are three. *xamsa saaɣ* five piastres. *xamsa kiilu* five kilos. *firibt*^{i} *xamsa biira* I drank five beers. *fahr*^{i} *xamsa* May. ‖*xamsa f-ɛeen-ak* five (fingers) against your (evil) eye! (accompanied by thrusting the palm of the hand with fingers outstretched towards the person addressed). - *xamsa wi-xmeesa* (1) formula used to ward off the evil eye. (2) charm in the shape of a hand worn for protection against the evil eye. - *ʔiɛmil bi-xamsa w-ḥaasib il-baṭṭaal [prov]* ≈ doing a little is better than

doing nothing at all.
¶ *xamsaat* /adv/ in fives.
خمسة *xamsa*[2] /n invar/ little bit, trifle, smidgen. *ʕistanna xamsa* hang on a tick! *xamsa ʠyaafa* a touch of elegance.
خمساوى *xamsaawi* /adj/ of five units, fivefold.
خمس *xums* /n pl *ʕaxmaas*/ one fifth, a fifth part. ‖*ḍarab ʕaxmaas fi-ʕasdaas* ≈ to rack one's brains.
خمس *xamas* /num: in constr w foll n pl; usu *xamast* when followed by n pl ordinarily w initial hamza/ five. *xallifit xamas banaat* she gave birth to five girls. *xamast alaaf* five thousand. *xamast iyyaam* five days. *xamas ʕawlaad* five children.
خماسى *xumaasi* /n pl *xumasiyyaat*/ *[mus]* quintet.
خميس *xamiis* /n/ **1** /pl *ʕixmisa*/ (also *yoom xamiis*) a Thursday. *yoom il-xamiis* (this) Thursday. ‖*xamiis il-ʛahd [Chr]* Maundy Thursday. **2** /pl *ximsaan*/ **2a** Thursday visit to a grave by members of the deceased's family, attended, especially in the case of the first two visits, by certain traditional practices. *b-aʛmil-lu ximsaan baqaa-lu ʛaʃar siniin* I've been visiting his grave every Thursday for ten years. **2b** memorial gathering usually at the home of the deceased on the two Thursdays following the death. ‖*ʕil-xamiis iṣ-ṣuxayyar* visit to the deceased's grave on the first Thursday after the death unless the first Thursday falls within the immediate (usually three-day) mourning period, in which case the visit is made on the next following Thursday, attended by the distribution of money and food to the poor. *ʕil-xamiis ik-kibiir* visit to the deceased's grave on the Thursday following that of *ʕil-xamiis iṣ-ṣuxayyar* attended by the same practices, plus a reception for the acceptance of condolences and the reading of the Koran. **2c** *[obsol]* money traditionally paid every Thursday to a Koranic teacher by the father of a child. *xud xamiis-u ʕin ʃa-lla ma-qara [prov]* (take his *xamiis* even if he hasn't recited) ≈ get as much as you can, even if you do not fulfil your obligations.
خميسة *xımeesa* /n pl *-aat*/: *xamsa w-ximeesa* (1) formula used to ward off the evil eye. (2) charm in the shape of a hand worn for protection against the evil eye.
خامس *xaamis* /adj/ fifth.
خمستاشر، خمسة عسر *xamastaafar* **1** /num pl *-aat*/ fifteen. **2** *ʕil-xamastaafar* /adj invar/ the fifteenth.
خمسين *xamsiin* **1** /num pl *-aat*/ fifty. *raagil fil-xamsinaat* a man in his fifties. **2** *ʕil-xamsiin* /adj invar/ the fiftieth. **3** *[Chr]* /n/ *ʕil-xamsiin* Pentecost.
خمسينى *xamsiini* /adj */ Pentecostal.
الخماسين *ʕil-xamasiin* /n/ a hot, dust-laden southern wind that blows on occasion during the spring.
خاسينى *xamasiini* /adj/ characterized by the conditions prevalent during *ʕil-xamasiin*, hot, dusty and windy (of weather).
خمسمائة *xumsumiyya* **1** /num pl *-aat*/ five-hundred. **2** *ʕil-xumsumiyya* /adj invar/ the five-hundredth.
خمّس *xammis* **1** /vt/ to do for a fifth time. **2** /vi/ to share a cigarette. *bi-yḥibbu yxammisu maʛa baʛḍ* they like to pass the cigarette around. -vn *taxmiis*; ava/pva *mixammis*.
تخميسة *taxmiisa* /pl *-aat*/ unit noun of *taxmiis*.

خ م ص
أخمص *ʕaxmaṣˀ, ʕaxmuṣˀ: ʕaxmaṣ il-ʠadam* /pl *ʕaxaamiṣ il-ʕaʠdaam*/ instep of the foot.

خ م ل
خمول *xumuulˀ* /n/ lethargy.

[1] خ م م
خمّ *xamm (u)* /vt/ **1** to gulp down, bolt (food). *ma-txumm'-ʃ il-ʃakl' kida - ʃumduʏ kuwayyis* don't bolt your food like that - chew it well! **2** to dupe, deceive. *ʃinta ḫa-txumm' miin* who are you trying to fool! -vn *xamm, xamamaan*; ava *xaamim*; pva *maxmuum*.
خمّة *xamma* /inst n, pl *-aat*/ fraud, trick.
انخمّ *ʃitxamm* /vi/ **1** to be gulped down (of food). **2** to be duped, be deceived. -iva *mıtxamm*.
انخمّ *ʃinxamm* = *ʃitxamm*. -iva *minxamm*.

[2] خ م م
خميمى *xamiimi* /adj invar/ soft (of unripe dates picked from under the tree).
خمّم *xammim* /vi/ to become soft (of unripe dates picked from under the tree). -vn *taxmiim*; ava *mixammim*.

[3] خ م م
خمّ *xumm* /n pl *ʕaxmaam*/ mud coop for chickens or poultry (see Pl.C, 5). ‖*xumm' noom* a person given to excessive sleep, an extremely lazy person. -also *xunn*.

خ م ن
خمّن *xammin* **1** /vt/ to guess, surmise. *xammin miin ga* guess who came! *kunt' mxammin il-ḫikaaya min zamaan* I had worked out the whole thing long ago. **2** /vi/ to make a plot, lay a plan. *xammint-i-lu ʛala ʛalqa* I determined to give him a beating. -vn *taxmiin*; ava *mixammin*.
تخمينة *taxmiina* /inst n, pl *-aat*/ **1** a guessing. **2** a plot.
اتخمّن *ʃitxammin* /vi/ to be guessed at, be surmised. -iva *mitxammin*.

خ ن ت see ² خ ن س : *xinta, xunta*

خ ن ث see ² خ ن س

خ ن ج ر
خنجر *xangar* /n pl *xanaagir*/ dagger.

خ ن خ ن
خنخن *xanxin* /vi/ to speak with a nasal tone. - vn *xanxana*; ava *mixanxin*.
اتخنخن *ʔitxanxin* /vi/ to become nasal. - ava *mitxanxin*.

خ ن د ق
خندق *xandaq¹* /vi/ *[mil]* to dig in, entrench. - vn *xandaqa*; ava *mixandaq*.
خندق *xandaq²* /n pl *xanaadiq*/ ditch, trench.

خ ن ز ي ر
خنزير *xanziir* /n pl *xanaziir*/ pig. *xanziir barri* wild boar. ‖*raagil xanziir* despicable man.
خنزيرة *xanziira* /n pl *-aat*/ **1** sow. **2** scrofula. **3** *[constr]* profile board.

خ ن س ¹
خنس *xanas (i)* /vi/ to fall silent. *wi-marra waḥda raaḥ qaaṭiʕ xans* and all of a sudden he fell silent. - vn *xans*; ava *xaanis*.
خنّاس *xannaas: ʔil-wiswaas il-xannaas* epithet of the Devil as tempter.
خنّيس *xanniis* /adj/ sly, guileful.
اتخنّس *ʔitxanas* = *xanas*. - ava *mitxinis*.
خنّس *xannis* /vi/ to be elusive. *ma-tḥawil-f' txannis maʕaaya* don't try to avoid the issue with me. ‖ *ʔin-nuur xannis* the light dimmed. - vn *taxniis*; ava *mixannis*.

خ ن س ²
خنثى *xinta, xunta* **1** /adj invar/ effeminate (of a man). **2** /n/ hermaphrodite.
خنوثة *xunuusa* /n/ effeminacy.
مخنّث *muxannas* /adj */ effeminate, weak (of a man).
اتخنّث *ʔitxannis* /vi/ to become effeminate or weak (of a man). - ava *mitxannis*.

خ ن ش ر
خنشر *xanfar* /vi/ **1** to become rugged, tough and masculine. *kaan ʃakl-u gamiil wi-baʕd' mudda xanfar* he used to be fine-featured, but after a while his looks became craggy. **2** to become coarse or crude. - vn *xanfara*; ava *mixanfar*.

خنشور *xanfuur* /pl *xanafiir*/ **1** /n/ **1a** *[slang]* man, guy. *ʕaʕdit xanafiir* a stag party. **1b** tough-guy. **2** /adj/ **2a** tough, rugged (of people). **2b** coarse, crude (of people).
خنافيري *xanafiiri* /adj/ pertaining to *xanfuur*.
اتخنسر *ʔitxanfar* /vi/ **1** to break (of the voice). **2** to be thick and husky (of the voice). - ava *mitxanfar*.

خ ن ص ر
خنصر *xanṣar¹* /n pl *xanaaṣir*/ **1** little finger. **2** *[butcher]* small sharp knife used for skinning, boning etc. **3** (also *ʕarf il-xanṣar*) cut of meat from the ribs. **4** molar tooth (of an animal). **5** *[arch]* squinch.
خنصر *xanṣar²* /vi/ **1** *[butcher]* to wield a *xanṣar*. **2** to steal in small amounts, pilfer. *ʔil-xaddaam bi-yxanṣar min filuus il-xuḍaar* the servant is always pilfering from the vegetable money. — /vt/ **3** to take in (cloth etc.). *xanṣar-li l-wisṭ' fiwayya* take the waist in a bit for me. - vn *xanṣara*; ava *mixanṣar*.
انخنصر *ʔitxanṣar* /vi/ to be pilfered. - iva *mitxanṣar*.

خ ن ف
خنف *xanaf* <Copt> /n/ nasality of speech.
أخنف *ʔaxnaf* /adj, fem *xanfa*, pl *xunf*/ characterized by nasality of speech.
خنافه *xanaafa* /n/ nasality of speech.
اتخنف *ʔitxanaf* /vi/ to become afflicted with nasal speech. - ava *mitxinif*.
انخنف *ʔinxanaf* = *ʔitxanaf*. - ava *minxinif*.
خنّف *xannif* **1** /vi/ to speak with a nasal voice. **2** /vt/ to make nasal. *xannif ṣoot-u* he made his voice nasal. - vn *taxniif*; ava/pva *mixannif*.
اتخنّف *ʔitxannif* /vi/ to be made nasal (of a voice). - iva *mitxannif*.
اتخانف *ʔitxaanif* /vi/ **1** to speak through the nose. **2** to put on airs, behave snobbishly. - ava *mitxaanif*.

خ ن ف ر
خنفر *xanfar* /vi/ **1** to speak with a nasal tone. **2** to snort. *ʔil-waad ʕaxad bard' w-ṭuul in-nahaar ʕaaʕid yixanfar* the boy has caught a cold and snuffles all day long. ‖*xanfar fin-noom* he fell into a deep sleep. — /vt/ **3** to make nasal. - vn *xanfara*; ava *mixanfar*.
انخنفر *ʔitxanfar* /vi/ to be made nasal. - iva *mitxanfar*.

خ ن ف س
خنفس *xunfis* /n/ **1** /coll/ beetle(s). **2** /n pl *xanaafis*/ hippie, long-haired male. — *ʔil-xanaafis* /pl n/ **3** the Beatles.
خنفسة *xunfisa* /unit n, pl *-aat, xanaafis*/ **1** a beetle.

‖*labbis il-xunfisa tibqa sitt in-nisa [prov]* dress up a beetle and she'll become a great lady. **2** feminine of *xunfis* 2.

مخنفس *mixanfis* /adj */ long-haired, modish etc.

اتخنفس *ʔitxanfis* /vi/ to grow one's hair long and/or dress colourfully, modishly etc. - ava *mitxanfis*.

خ ن ق

خنق *xanaq (u)* /vt/ **1** to asphyxiate, suffocate. *ʔir-riiḥa l-wiḥʃa xanaqit-ha* she choked on the bad smell. **2** to strangle. - vn *xanaqaan, xanq*; ava *xaaniq*; pva *maxnuuq*.

مخنوقة *maxnuuqa* /n pl *-aat*/ motif used in tent appliqué designs (see Pl.H, 22).

خنقة *xunqa, xinqa* /n pl *-aat, xunaq*/ point between two body joints. *xunqit il-ʔiid* the point joining the hand and the arm.

خناق *xinaaq* /n/ lower part of the throat or that part of a garment next to it. *misku fi-xnaaq baʕq* they grabbed one another by the throat (or by the collar). ‖ *ʔinta ḥa-timsik fi-xnaaq-i* are you going to quarrel with me?

خناقة *xinaaqa* /n pl *-aat*/ quarrel, fight, row.

خنّاق *xannaaq* /n */ strangler. ‖ *ʔil-quṭṭ' ma-yḥibb'-ʃ ʔilla xannaaq-u [prov]* (the cat likes only him who treats it cruelly) ≈ people respond only to harsh treatment.

خنّاق *xunnaaq* /n/ **1** strangles, equine distemper. **2** diphtheria.

مخنق *maxnaq* /n pl *maxaaniq*/ *[carp, metal]* jig.

اتخنق *ʔitxanaq* /vi/ **1** to be asphyxiated, be suffocated. *ʔitxanaqit mil-ɣaaz fil-maṭbax* she suffocated from the gas in the kitchen. **2** to be strangled. - iva *mitxiniq*.

انخنق *ʔinxanaq* = *ʔitxanaq*. - iva *minxiniq*.

خانق *xaaniq* /vt/ to quarrel with. - vn *xinaaq*; ava *mixaaniq*.

اتخانق *ʔitxaaniq* /vi/ to quarrel, fight, brawl. *ʔitxanqu ʕaṣ-ṣabuun* they fought to get some soap. - ava *mitxaaniq*.

اختنق *ʔixtanaq* /vi/ to suffocate. - vn *ʔixtinaaq*; ava *mixtiniq*.

خ ن ن

خنّ *xunn* <perh Copt> /n pl *ʔaxnaan*/ **1** mud coop for chickens or poultry (see Pl.C, 5). - also *xumm*. **2a** square storage niche in a wall. **2b** storage space forward in a wooden boat. **3** locker. **4a** small windowless room, den. **4b** hide-out.

خ ه

خه *xah* /fem n, pl *-aat*/ seventh letter of the Arabic alphabet. - also *xaa, xaaʔ*.

خ و اج

خواجة *xawaaga* <P *khwâja*> /n pl *-aat*/ **1** European or western foreigner. **2** *[obsol]* Christian.

خواجاية *xawagaaya* /n pl *-aat, xawagaat*/ European or western woman foreigner.

خ و ت

خوت *xawat (i)* /vt/ to pester, bother. *xawat-ni ʕaʃaan ʔaxd-u maʕaaya* he pestered me to take him with me. ‖*bi-tixwit id-dimaaɣ* ≈ you're a pain in the neck! - vn *xawta*; ava *xaawit*; pva *maxwuut*.

خوتة *xawta* /n pl *xiwat*/ commotion, row, scene. *ʔeeh il-xawta lli-nta ʕamil-ha di* why don't you shut up! *ga ʔimbaariḥ ʕamal-lina xawta kbiira ʕaʃaan il-ḥikaaya* he came yesterday and made a huge scene with us over the matter.

اتخوت *ʔitxawat* /vi/ to be pestered. - iva *mitxiwit*.

انخوت *ʔinxawat* = *ʔitxawat*. - iva *minxiwit*.

خ و ج

خوجة *xooga* <T *ḫoca*> /n pl *-aat*/ **1** *[obsol]* teacher. **2** *[naut]* purser.

خ و خ [1]

خوخ *xoox* /coll n/ peach(es). ‖ *ʔilli ma-yirḍa bil-xoox yirḍa b-faraab-u [prov]* (he who doesn't accept the peach must accept its nectar) if one doesn't accept what one is first offered, one may have to be satisfied with something less later on.

خوخة *xooxa'* /unit n, pl *-aat*/ a peach.

خوخاية *xoxaaya* /unit n, pl *-aat*/ a peach.

خ و خ [2]

خوخة *xooxa²* /n pl *xoox*/ opening in a wall or gate, wicket gate.

خوّخ *xawwax* /vi/ to rot away, perish or decay inside. *ʔil-xaʃab mixawwax* the wood is rotten below the surface. *ʔil-ʕaya xallaa xawwax wi-baqa gild[a] ʕala ʕaḍm* illness drained his strength completely and left him no more than skin and bones. ‖*muxx-u xawwax* ≈ his mind has gone to seed. - vn *taxwiix*; ava *mixawwix*.

خ و ذ see خ و ز

خ و ر [1]

خور *xoor* /n pl *ʔaxwaar, xiraan*/ land depression.

خ و ر [2]

خوّر *xawwar'* /vi/ **1** to become weak and sterile. *ʔil-ʔarḍ' xawwarit min kutr il-ʔihmaal* the soil had

cracks and holes from much neglect. **2** to be or become exhausted. - vn *taxwiir, taxwiir*; ava *mixawwar*.

خ و ر [3]
خوّر *xawwar* [2] /vi/ **1** to make a noise. **2** to bellow (of a bull). - vn *taxwiir, taxwiir*; ava *mixawwar*.

خ و ر س
خورس *xoorus* <Gr *khoros*> /n/ *[Chr]* choir.

خ و ز
خوذة *xuuza* /n pl *xiwaz*/ helmet.

خ و ز ق see also **خ ز ق**
خوزق *xoozaq* or *xawzaq* /vt/ **1** *[obsol]* to impale. ‖ *ʕil-mixoozaq yiftim is-sulṭaan* (the impaled man will insult the sultan) in extremities a man can do anything. **2** to corner, put in a tight spot, play a dirty trick on. - ava/pva *mixoozaq, mixawzaq*.
اتخوزق *ʕitxoozaq* or *ʕitxawzaq* /vi/ **1** to be impaled. **2** to be cornered, be put in a tight spot, be tricked. - iva *mitxoozaq, mitxawzaq*.

خ و ش
خوّش *xawwiʃ* /vt/ *[carp]* to countersink (a hole, for a screw-head). - vn *taxwiif*; ava/pva *mixawwiʃ*.
تخويشة *taxwiifa* /n pl *-aat*/ *[carp]* countersink.
اتخوّش *ʕitxawwiʃ* /vi/ *[carp]* to be countersunk (of a hole, for a screw-head). - iva *mitxawwiʃ*.

خ و ص
خوص *xuuṣ* /coll n/ palm leave(s), palm frond(s). ‖ *ħadd il-xuuṣ [Chr]* Palm Sunday.
خوصة *xuuṣa* /unit n, pl *-aat, xiwaṣ*/ a (piece of) palm leaf, a (piece of) palm frond. ‖ *xuuṣit ṭarbuuʃ* the (rice- or other) straw lining of a tarbush. - *xiwaṣ ħadiid* rolled steel strips, steel billets.
اتخوّص *ʕitxawwaṣ* /vi/ to pad up with sacking material or with woven palm-leaves. - ava *mitxawwaṣ*.

خ و ض
خاض *xaaḍ (u)* /vi/ **1** to wade in water or mud. **2** to tell tales, gossip. *ṭuul in-nahaar bi-txuuḍ fi-siirit garit-ha* all day long she gossips about her neighbour. ‖ *bi-yxuuḍ fid-diin* he blasphemes. — /vt/ **3** to go through, undergo. *maṣr[i] xaaḍit ħuruub mariira* Egypt went through some bitter wars. - vn *xawaḍaan*; ava *xaayiḍ*.
اتخاض *ʕitxaaḍ* /vi/ to be suffered, be gone through. - iva *mitxaaḍ*.
انخاض *ʕinxaaḍ* = *ʕitxaaḍ*. - iva *minxaaḍ*.
خوّض *xawwaḍ* = *xaaḍ*. - vn *taxwiiḍ*; ava *mixawwaḍ*.

خ و ف
خاف *xaaf (a, a)* /vi/ **1** to be afraid. *ʕil-gabaan yixaaf min xayaal-u* the coward is afraid of his own shadow. **2** to worry, be concerned. *ma-txaf-ʃ[i] ɛalayya* don't worry about me. *xayfa law iftaɣalit tiṣrif in-naẓar ɛan ig-gawaaz* she's afraid if she works she'll forget about marriage. *min xaaf silim [prov]* ≈ better safe than sorry. — /vt/ **3**↑ to fear, revere, stand in awe of. *bi-yxaaf rabb-i-na* he fears God. - vn *xoof*; ava *xaayif*.
خوف *xoof* /n/ fear.
خوفا *xawfan: xawfan min*↑ /conj/ for fear that, lest. *ma-zurtuu-ʃ xawfan min illi b-yitɕaal* I didn't visit him for fear of what is being said.
خوّاف *xawwaaf* /adj */ fearful, timid.
خوّيف *xawwiif* = *xawwaaf*.
مخيف *muxiif* /adj/ frightening, awful.
خوّف *xawwif* /vt/ **1** to frighten. *ʕinta miʃ bi-txawwif-ni b-kalaam-ak* your words don't scare me. **2** to worry, disturb. - vn *taxwiif*; ava *mixawwif*.
اتخوّف *ʕitxawwif* /vi/ **1** to be frightened. **2** to be worried. - iva *mitxawwif*.

خ و ل [1]
خولي *xooli* /n pl *xiwala*/ overseer of farm workers.
خوّل *xawwil*↑ /vt/ to grant (power, authority etc. to s.o.). *xawwil-lu s-sulṭa* he gave him the authority. - vn *taxwiil*; ava *mixawwil*.
اتخوّل *ʕitxawwil* /vi/ to be granted (of power, authority etc.). - iva *mitxawwil*.

خ و ل [2]
خول *xawal* /n pl *-aat*/ **1** *[coarse]* passive homosexual, catamite, nance. **2** *[abus]* bastard, stinker, swine. see further under **خ و ل ن**

خ و ل [3] see **خ ا ل [1]** and **خ ا ل [2]**: *xaal[1], xaalu, xaala, xaal[2]*

خ و ل ن see also **خ و ل [2]**
اتخولن *ʕitxawlin* /vi/ **1** to be spineless or effeminate. **2** to dither. *baṭṭal xawlana wi-ftaɣal baɕa* stop shilly-shallying and get down to work! - vn *xawlana*; ava *mitxawlin*.

خ و ن
خان *xaan [2] (u)* /vt/ to betray, let down. *nadab il-ħaẓẓ illi xaan-u* he bewailed the luck that failed him. *law ẓakrit-i*

miʃ xaynaa-ni if my memory does not deceive me. ‖*tixuun-ak il-ɛiʃra* does our long friendship mean nothing to you? -*yixuun-ak il-ɛeeʃ wil-malḥ* does friendship mean nothing to you? -*ma-xad-ʃ' xwaana* he was not on his guard. -vn *xiyaana, xuwaana*; ava *xaayin*.

خاين *xaayin* /n pl *xawana*/ betrayer, traitor.

خوّان *xawwaan* /adj/ untrustworthy, fickle (of affairs, the world etc.). *ʃid-dinya xawwaana* it's a treacherous world.

مخانة *maxaana* /n pl *-aat*/ secret. *ɛirift' maxaanit il-masʃala* I learned the secret behind the matter.

اتخان *ʃitxaan* /vi/ to be betrayed. -iva *mitxaan*.

خوّن *xawwin* /vt/ to suspect or accuse of treachery. *ḥarras mın ṣaḥb-ak wala txawwin-u [prov]* better to be on guard against your friend than have reason to suspect him and accuse him afterwards. -vn *taxwiin*; ava *mixawwin*.

اتخوّن *ʃıtxawwin* /vi/ to be suspected or accused of treachery. -iva *mitxawwin*.

استخون *ʃıstaxwin* /vt/ to consider untrustworthy. ‖*bi-yistaxwin ṣawabɛ-u* (he suspects his own fingers) he's very suspicious of others. -vn *ʃistixwaan*; ava *mistaxwin*.

[1] خ و ى see also [1] خ خ ء

خاوى *xaawa* /vt/ to be intimate with. *ʃin kibir ibn-ak xawii [prov]* if your son has grown up, treat him as a brother. ‖*mixaawi g-ginn* in league with demons. -vn *mixawiyya*; ava *mixaawi*.

اتخاوى *ʃitxaawa* /vi/ to have a close relationship with each other. *hiyya wi-bliıs ıtxaawu* she and the devil are hand in glove. -ava *mıtxaawi*.

[2] خ و ى

خوى *xiwi (a)* /vi/ to become empty. *ʃil-waaḥid baṭn-u xawyaana* I am rather hungry. -vn *xawa, xawayaan*; ava *xaawi, xawyaan*.

خ ى ب

خاب *xaab (i)* /vi/ to fail to succeed, come to nothing. *xaab ʃamal-u* his hopes came to nothing. *xaab fi-fuxl-u* he was unsuccessful in his work. *min saaɛit ma ɛirif il-xammaara xaab xeeba ɋawiyya* from the moment he began to frequent bars he became a complete good-for-nothing. ‖*marra ṭṣıb wi-marra txıib* ≈ win a few, lose a few. -vn *xeeba, xayaaba*; ava *xaayib, xaybaan*.

خيبه *xeeba* /n/ failure. ‖*ya xeeba* you good-for-nothing! -*ya xebt-ak* what a dead loss you are! -*xeebit ʃamal rakba gamal [prov]* ≈ a failure for all to see. -*ʃik-kidb' xeeba* lying is a sign of failure.

خايب *xaayib* /n pl *xiyyaab, xuyyaab*/ good-for-nothing.

أخيب *ʃaxyab* /el/ more/most unsuccessful or useless.

خيّبا *xayyuuban*: (1) *xayyuuban ɛala* may shame cover, as in *xayyuuban ɛala daɋn-ak* may you be greatly shamed! (2) *xayyuuban ɛala-... ʃin* it would be proof of one's worthlessness if ..., as in *xayyuuban ɛalayya ʃin ma-kunt itɛallimt' swaaɋit ɛarabiyya f-gumɛa* I would be shown up as a fool if I couldn't learn to drive a car in a week!

خيّب *xayyib* /vt/ **1** to cause to fail. *ṣaḥb-u xayyib-u* his friend made him fail. ‖*ʃallaah yıxayyib-ak* a mild or affectionate curse. **2** to disappoint, fail. *bi-txayyibu leeh kull' ʃamaal-i* why do you frustrate all my hopes? — /vi/ **3** to fail, be disappointing. *waṣfa ma-txayyib-ʃ' ʃabadan* a prescription that never fails. -vn *taxyiib*; ava *mixayyib*.

انخيّب *ʃitxayyıb* /vi/ **1** to be made to fail. **2** to be disappointed. -iva *mitxayyib*.

استخيب *ʃistaxyib* /vt/ to consider a failure. -vn *ʃistixyaab*; ava *mıstaxyib*.

خ ى خ

خيخا *xiixa* /adj invar/ sissyish, spineless, weak and useless. *raagil xiixa* a weakling. *da ḥmaar xiixa ma-yıswaa-ʃ il-ɛaliiɋ ıllı bi-yakl-u* that's a rotten donkey, not worth the fodder it eats.

خايخ *xaayıx* /adj */ weak, effeminate.

خيّخ *xayyix* /vi/ to become sissyish, weak or useless. -ava *mıxayyıx*.

انخيّخ *ʃitxayyix = xayyix*. -ava *mitxayyix*.

[1] خ ى ر

خير *xeer* /n/ **1** bounty, blessing, good. *xeer rabb-i-na ktiir* God's bounty is great. *zıyaadit ıl-xeer xereen* ≈ you cannot have too much of a good thing. *ʃif-fagara l-murra xer-ha barra* it's a poor tree that drops its fruit outside ≈ charity begins at home. ‖*ḥaṣal xeer* no harm has been done. -*xeer (ʃın ʃaaʃ allaah)* all's well (I hope)? -*bı-xeer* (1) in good health, as in *ʃana b-xeer wil-ḥamdu li-llaah* I'm in good health, praise be to God! *balad-na b-xeer* our country is in good shape! (2) (also *ɛala xeer*) safely, as in *lı-ḥadd' ma tmurr ıl-ʃazma ɛala xeer* until the crisis is safely over. -*fiık il-xeer* (thank you,) you're a good sort. -*gayyın wı-gayy' xer-na maɛaana* we're coming and our bounty (i.e. food etc.) is coming with us. — *ʃil-xeer* **2** good luck, good fortune. *bı-ygiib ıl-xeer* it brings good luck. *wıff-u fii ʃil-xeer* his presence brings good luck. *ga l-xeer ɛala ɋuduum-u* he

brought good luck with him. *ṣabaaḥ il-xeer* good morning. *masaaʕ il-xeer* good evening. ‖*kattar xeer-ak* see *kattar*. **3** (also pl form *xayraat*) good deeds, charitable acts. *bi-yiʕmil il-xeer* he does good. ‖*dalaayil il-xayraat* see *dalaayil*.

خير *xayr* /n in constr/ *[frozen contexts]* the best of. *xayr il-ʕumuur il-wasaṭ [prov]* the middle road is the best. *xayru l-kalaam ma qalla wa-dall [prov]* ≈ brevity is the soul of wit. *xayr il-birr[a] ʕaagil-u* ≈ the sooner the better. *xayr il-ʕanaam* (the best of mankind) epithet of the Prophet Muhammad.

خيرى *xayri* /adj/ charitable. *ʕamal xayri* a charitable act. *gamʕiyya xayriyya* a charitable society.

خيره *xiira* /n/ **1** choice. *ma-lii-ʃ xiira fil-ḥikaaya di* I have no choice in this matter. ‖*ʕala xiirit illaah* ≈ God be with you (or us etc.) (in what you (or we etc.) are about to do)! God grant success! **2** goodness. *ʕil-xiira f-ma xtaar-u llaah* God's is the best solution (when a solution to a dilemma presents itself out of the blue). *kull[i] taʕxiira w-fiiha xiira [prov]* every delay brings its share of good.

خيّر *xayyir, xiyyir* /adj */ **1** virtuous, kind. **2** charitable, benevolent.

أخير *ʕaxyar* /el/ better/best, more/ most likely to bring blessing or good fortune. *ʕil-ʕaxyar lak ʕinnak* ... the best thing for you would be to .... *ʕinta lik il-ʕaxyar* the choice is yours.

خيار *xiyaar[1]* /n/ **1** choice. *lik il-xiyaar* you have the choice. **2** /in constr/ the best, the choice. *huwwa min xiyaar in-naas* he's one of the very best.

خيّر *xayyar* /vt/ to cause to choose, offer a choice to. *ma-txayyar-nii-ʃ benkum* don't make me choose between you! *ʕaawiz tiḥayyar-u xayyar-u [prov]* if you want to confuse him make him choose. - vn *taxyiir*; ava *mixayyar*.

اختيّر *ʕitxayyar* /vi/ **1** to choose, make a choice, decide. *kunt[a] ʕaawiz ʕabʕa muhandis bass iẓ-ẓuruuf itxayyarit-li* I wanted to become an engineer, but circumstances decided for me. *ʕitxayyart[i] been ʕinni ʕaʕbal furuṭ-hum ʕaw ʕatrifid* I had to make a choice between accepting their conditions or being sacked. **2** to be chosen. ‖*ma-yitxayyar-ʃ[i] ʕannak* he's no better than you, you're every bit as good as he is. - ava/iva *mitxayyar*.

اختار *ʕixtaar* /vt/ to choose, select. *ʕixtar-li fustaan ḥilw* choose me a nice dress. *fariʕ-na xtaar il-ʕarḍ* our team chose the ground. - vn *ʕixtiyaar*; ava *mixtaar*; pva *muxtaar[↑]*.

اختيار *ʕixtiyaar* /n pl *-aat*/ choice. *ʕixtiyaar ḥurr* a free choice.

اختيارى *ʕixtiyaari* /adj */ optional. *ʕasʕila xtiyariyya* optional questions.

المختار *ʕil-muxtaar* /n/ the Chosen One (epithet of the Prophet Muhammad).

مختارات *muxtaraat[↑]* /pl n/ selections, selected passages. *muxtaraat min id-diwaan* selections from the anthology.

استخارة *ʕistixaara* /n pl *-aat*/ sortilege or casting of lots using the beads of a *sibḥa* or the Koran.

خ ى ر[2]

خيار *xiyaar[2]* /coll n/ gherkin(s). ‖*xiyaar ʃambar* see *ʃanbar[3]*.

خيارة *xiyaara* /unit n, pl *-aat*/ a gherkin. ‖*ʕid-dinya zayy il-xiyaara - yoom f-iid-ak wi-yoom* (or *ʕafara) fi-ṭiiẓ-ak [prov]* the world is like a gherkin - one day in your hand, one day (or ten) up your arse.

خ ى ش

خيس *xeeʃ* /n/ sacking, sackcloth, burlap.

خيسة *xeeʃa* /n pl *-aat*/ piece of sackcloth or burlap (used, e.g., as a floor-cleaning cloth).

خيسى *xeeʃi* /adj/ made of sackcloth or burlap.

خيّس *xayyiʃ* /vt/ to cover or wrap with sacking or burlap. - vn *taxyiiʃ*; ava/pva *mixayyiʃ*.

اخيّس *ʕitxayyiʃ* /vi/ to be covered or wrapped in sacking or burlap. - iva *mitxayyiʃ*.

خ ى ط

خيط *xeeṭ* /coll n, pl *xuyuuṭ, xeṭaan*/ thread. ‖*xuyuuṭ il-fagr[↑]* the first rays of dawn. - *bil-xeeṭ wil-mixyaaṭ* precisely, accurately, as in *ḥakaa-li l-ʕiṣṣa bil-xeeṭ wil-mixyaaṭ* he told me the story in detail. - *ʕaaṭiʕ xeeṭ il-mizaan* dead drunk. - *xeeṭ il-banna* plumb-line. - *zayy[i] xeṭeen fi-ʕibra* (as inseparable) as two threads in a needle.

خياطة *xiyaaṭa* /n/ sewing, stitching.

خيّاط *xayyaaṭ* /n */ tailor (especially of the less pretentious sort).

خيّاطة *xayyaaṭa* /n pl *-aat*/ seamstress, dress-maker.

مخياط *mixyaaṭ, muxyaaṭ* /n *maxayiiṭ*/ packing-needle.

خيّط *xayyaṭ* /vt/ **1** to sew, stitch. *xayyaṭ-lu badla* he sewed him a suit of clothes. *ʕid-duktuur xayyaṭ ig-garḥ* the doctor stitched up the wound. **2** *[coarse]* to copulate with, screw. - vn *taxyiiṭ*; ava *mixayyaṭ*.

اخيّط *ʕitxayyaṭ* /vi/ **1** to be sewn, be stitched. **2** *[coarse]* to be screwed. - iva *mitxayyaṭ*.

خ ى ف see خ و ف: *xaayif, muxiif*

[1] خ ى ل

خال *xaal*[3] *(i)* /vi/ **1** to be well suited, go well. *ʕil-karafatta di txiil ɛala l-badla* this tie goes well with the suit. *ʕil-libs' xaayil ɛaleeha* the clothes look good on her. *huwwa xaayil qawi fil-badla* he looks very smart in the suit. *ʕilli zayyak ma-yxil-f' fik-kidb* one who is (sincere) like you makes a bad liar. **2** to be plausible (of a deception). *yixiil ɛaleek ik-kalaam da* are you really taken in by that? - vn *xayalaan*; ava *xaayil*.

خيل *xayal (i)* /vt/ to distract, disturb. *ʕil-bint' xayalit-ak ɛan il-muzakra* the girl has distracted you from your studies. - vn *xayalaan, xayla*; ava *xaayil*; pva *maxyuul*.

خايلة *xayla* /n pl *-aat*/ disturbing interruption or distraction. ‖*bala xayla* don't bother yourself with that. *-xayla kaddaaba* a lot of fuss about nothing.

خيال *xayaal* /n pl *-aat*/ **1** shadow. *bi-txaaf min xayal-ha* she's afraid of her own shadow. ‖*xayaal il-maqaata* scarecrow. *xayaal iḍ-ḍill* shadow play. **2** fancy, imagination. *xayaal-i saraḫ* my imagination wandered. *xayaal-u xiṣb* he has a fertile imagination.

خيالى *xayaali* /adj */ **1** imaginary, unreal. **2** fantastic, fabulous.

اتخيل *ʕitxayal* /vi/ to be distracted. - iva *mitxiyil*.

اتخيّل *ʕitxayyil, taxayyal↑* /vt/ to imagine, fancy. *bi-yitxayyil ʕinn in-naas kull-a-ha ḫaramiyya* he imagines that everyone is a thief. *taxayyal baqa* just imagine! can you credit it? - vn *taxayyul*; ava *mitxayyil*.

تخيّل *taxayyul↑* /n pl *-aat*/ illusion, imagining, fancy.

خايل *xaayil* /vt/ to attract the attention of, distract. *qaaɛid yixayil-ha bil-miraaya* he is trying to attract her attention by (flashing) the mirror. - vn *mixayla*; ava *mixaayil*.

اتخايل *ʕitxaayil* /vi/ to put on airs, act conceitedly. - ava *mitxaayil*.

¶ *ʕitxaayil ɛala* to boast of being better than. *ʕitxayilt[a] ɛalee b-ɛarabiyyit-i* I boasted of having a better car than his. - *ʕitxaayil bi-* to imagine seeing. *ʕana txayilt' biiha* I thought I saw her.

[2] خ ى ل

خيل *xeel* /coll n, pl *xuyuul, xiyuul*/ horse(s). ‖*ʕakbar maa fi-xeel-ak ʕirkab-u* (ride your highest horse) do your damnedest! you don't scare me!

خيّال *xayyaal* /n pl *xayyaala*/ horseman, cavalryman.

خ ى م

خيمة *xeema* /n pl *xiyam, xiyaam*/ tent.

خيمى *xiyami* /n pl *-yya*/ tent maker.

خيامى *xiyaami* /n pl *-yya*/ = *xiyami*.

خيامية *xiyamiyya* /prop n/ district in *ʕid-darb il-ʕaḥmar* where tent-making shops are located.

خيّام *xayyaam* /n */ tent maker.

خيّم *xayyim* /vi/ to prevail. *ʕis-sukuut xayyim* silence reigned. - vn *taxyiim*; ava *mixayyim*.

خ ى ن see **خ و ن**: *xaayin, xiyaana*

(خ ى ى)

خىّ *xayy* /fem *xayya*/: *ya xayy* exclamation of bantering dismissal ≈ come off it! don't exaggerate!

خيّة *xayya* /n pl *-aat*/ noose, snare. ‖*gaab rigl-(u) fil-xayya* to trap (s.o. or s.th.).

د

د ا

دا، ده *da*[1] (also *dawwa, dawwat, dawwak, dawwan, dahú, dahuwwa, dahuwwat, dahuwwak, dahuwwan, dihawwa, dihawwat, dahawwak, dihawwan*) /fem *di* (also *diyya, diyyat, diyyak, diyyan, dihayya, dihayyat, dihayyak, dihayyan, dahí, dahiyya, dahiyyat, dahiyyak, dahiyyan, dihiyya, dihiyyat, dihiyyak, dihiyyan*); pl *dool* (also *dooli, doola, doolat, doolak, doolan, dahúm, dahumma, dahummat, dahummak, dahumman, duhamma, duhammat, duhammak, duhamman*)/ **1** /demonst pron/ this, this one, that, that one. *ʔataluu ʕafaan da* they killed him for that? *da l-mudiir wi-di mraat-u* that's the director and that's his wife. *dool ʕaṣḥaab-ak* are these your friends? *ʕinta ʕaayiz da walla da* do you want this one or that one? ‖ *da w-da* all and sundry, every Tom, Dick and Harry, as in *ʕinta ʔaaʕid tidaxxal da w-da* are you letting just anyone come in? **2** /demonst adj, in apposition/ this, that. *ʕir-raagil da miin* who is this man? *ʃuuf il-bint*[i] *di* just look at that girl. *b-aḥibb in-naas dool* I like those people.

¶ *min da ʕalaa-da* (as a response) middling, not all that good but not all that bad, as in *ʕaḥwaal-ak ʕiẓẓayyaha. - min da ʕalaa-da* 'How are things with you?' 'I get by.' -... *min dool* ... of the average kind, ... of the typical kind, as in *ʕis-sitt*[i] *min dool tuʔʕud tidallaʕ fi-bn-a-ha l-ɣaayit ma ybuuʕ* the average woman goes on spoiling her son until he's ruined, *marra min dool ḥa-titkiʃif* one of these days you'll be found out, *yoom min dool ḥa-yimʃi* one of these days he'll quit, *ʕaah min dool* ≈ don't tell me! I well know what sort they are! - *da ... da* /fem *di ... di*, pl *dool ... dool*/ exclamatory demonstrative conveying derision or admiration of the object indicated. *da ʕeeh lli-nta labs-u da* what on earth is that you're wearing? *da miin da lli ʔal-lak* who the hell told you so? *dool riggaala dool* those call themselves men? *di ʕarabiyya di* you call that a car? *da ʕeeh ig-gamaal da kull-u* how beautiful!

دا، ده *da*[2] /exclamatory particle/ but, why, really. *da l-mooḍa l-ʕayyam-di magnuuna* really, fashions these days are crazy! *da l-burtuʔaan is-sanaa-di ḥilw*[i] *ʔawi* my, the oranges are nice this year! *da-ḥna zabayn-ak* but we're customers of yours!

د ا ء

داء *daaʕ* /n pl *-aat*/ **1** physical or mental ailment. *daaʕ ik-kalb* rabies. *daaʕ il-fiil* elephantiasis. *ḍaaʕ il-ʕaẓama* megalomania. ‖ *daaʕ il-muluuk* gout. **2** bad habit. *ʕilli fii daaʕ ma-yisla-huu-ʃ [prov]* he who has a bad habit cannot get away from it. ‖ *daaʕ-u daʕ-hum* he's always picking on them.

د ا د [1]

دادة *daada*[1] <T *dada* from P> /n pl *-aat, dadawaat*/ nanny, children's nurse.

د ا د [2] see د د ى: *daada*[2], *ʕitdaada*

د ا ر see د و ر: *daar*

د ا س

داسة *daasa* /n pl *-aat*/ pulley, block.

د ا غ

داغ *daaɣ: gaab daaɣ(-u)* to bring about (s.o.'s) downfall, finish (s.o.) off.

د ا ك

داك *daak* (also *dukha, dukhat, dukhawwa, dukhawwat, dukhawwan*) /demonst pron; fem *diik*[1]

(also *dikha, dikhat, dikhayya, dikhayyat, dikhayyan, dikhiyya, dikhiyyat, dikhiyyan*); pl *dukhum* (also *dukhumma, dukhummat, dukhumman, dukham, dukhamma, dukhammat, dukhamman*)/ that (other), that (other) one. *diik il-leela* that night, the other night. *ʕil-fustaan da ʃaḫla min dukha* this dress is prettier than that other one. (n.b. *ʕin-nahaar* and *ʕil-yoom* are qualified irregularly by the feminine form, as in *kunt[a] ɛandu diik in-nahaar* I was at his place just the other day).

د ا ل

دال *daal* /fem n, pl *-aat*/ eighth letter of the Arabic alphabet. - also *dih*.

د ا م

دام *daam*[1] <Fr *dame*> /n pl *-aat*/ queen (in cards).

د ا ن

دانة *daana* <T *dane* from P> /n pl *-aat*/ (artillery) shell.

د ا ن ق

دانق *daaniq* <P *dânak*> /n pl *dawaaniq*/ *[obsol]* **1** unit of land measure equal to 29.172 square metres. **2** type of copper coin. *bi-yḫasib-ni bid-daaniq wis-saḫtuut* he makes me account for every last penny.

د ا ی

داية *daaya* <P *dâya*> /n pl *-aat*/ midwife without professional training or qualifications. ‖*di daaya w-maʃta [deris]* (she is both a midwife and a tirewoman) ≈ she can turn her hand to anything.

د ا ی ل

دايل *daayal* <Engl> /n pl *-aat*/ (telephone) dial.

د ء ب

دأب *daʃb* /n/ habit, natural disposition. *ʃana daʃb-i kida* that's the way I am. *min daʃb-u k-kidb* lying is a habit with him.

دؤب *duʃb* /adj invar/ sly. *mara duʃb* a cunning woman.

دؤوب *daʃuub* /adj */ industrious.

(د ب ا ر)

دوبارة *dubaara*[1] <perh T *dubara*> /n/ string, pack thread, twine. *fatlit dubaara* piece of string. *kurariyyit dubaara* ball of string. ‖*fuxl id-dubaara [obsol]* trickery. *-qaṣr id-dubaara* small area in central Cairo between Tahrir Square and Garden City.

دوبارة *dubaara*[2] <T *dubara* from P> /n pl *-aat*/ pair of twos (in dice).

د ب ب [1]

دبّ *dabb (i)* /vt/ **1** to bang, thump, hit. *qaɛadit tidibb[a] ɛal-baab lamma ṣḫiina* she went on pounding at the door till we woke up. *dabb-a-ha ɛalqa* he gave her a thumping. ‖*ʃir-rigl' tdibb' maṭraḫ ma tḫibb [prov]* (one's foot hits the place one likes) one's feet follow one's fancy. **2** to thrust, stuff. *dabb il-filuus fi-geeb-u* he stuffed the money into his pocket. *dabb' ḫittit diin ʃakla qabl' ma naam* he stuffed down one hell of a meal before he went to sleep. – /vi/ **3** to make a banging, make a clattering *ʃeeh illi bi-ydibb' fooq ɪs-suṭuuḫ* what's making the banging noise on the roof? *ṭiliɛt adɪbb' nzilt adibb' laqeet id-dibb' bi-yqazqaz libb* I went up banging, I came down banging, I found the bear cracking *libb* with his teeth (a children's rhythm chant). ‖*kull' min habb' w-dabb* every Tom, Dick and Harry. - vn *dabb, dabiib, dababaan*; ava *daabib*; pva *madbuub*.

¶ *dabb' fi-* to surge through, rise up within, as in *dabbit fii ʃir-rooḫ* (1) he began to stir. (2) his spirits rose.

دبّة *dabba*[1] /inst n, pl *-aat*/ a bang, a thump. ‖*dabbit ɪn-namla* the slightest noise, the faintest sound, as in *yismaɛ dabbit in-namla* he's very sharp-eared, *kaanit id-dɪnya sakta tismaɛ dabbit in-namla* it was so quiet you could hear a pin drop.

دابّة *dabba*[2] /n/ dumb animal. *ʃaghal min dabba* ≈ dumber than an ox.

دبيب *dabiib* /n/ *[non-Cairene]* **1** snake. **2** /coll/ snake(s).

دبّابه *dabbaaba* /n pl *-aat*/ **1** tank, track-laying vehicle of war. *ṭaqm' dabbaaba* tank crew. *wiliyya ɛamla zayy id-dabbaaba* a woman looking like a tank (i.e. a very large woman). ‖*gazma (kaɛb') dabbaaba* a pair of wedge-heeled shoes. **2** *[print]* platen.

مدبّ *midabb, madabb* /masc and fem n, pl *-aat*/ **1** one who commits gaffes or blunders. **2** sucker, dupe, fall guy.

اتدبّ *ʃɪtdabb* or *ʃɪddabb* /vi/ to be thrust, be stuffed. ‖*ɛeen tɪtdabb' fiiha ruṣaaṣa* (an eye in which a bullet should be thrust) (1) a bold eye, as in *di mara yitdabb' f-ɛen-ha ruṣaaṣa* this is a woman with a bold look. (2) the evil eye, as in *dɪ mara ɛaleeha ɛeen tɪtdabb' fiiha ruṣaaṣa* this woman has the evil eye. - iva *mitdabb*.

اندبّ *ʃindabb* = *ʃɪtdabb*. - iva *mɪndabb*.

د ب ب [2]

دبّب *dabbib* /vt/ to make pointed, sharpen to a point.

manaxiir-u mdabbiba his nose is pointed. - vn *tadbiib*; ava/pva *midabbib*.
اتدبّب *ʔitdabbib* or *ʔiddabbib* /vi/ to be made pointed. - iva *mitdabbib*.

د ب ب [3]
دبّ *dibb, dubbˀ* /n pl *dibab, dibabaˀ*/ bear. ‖ *ʔid-dubb il-quṭbi* the Pole Star. - *ʔid-dubb il-ʔakbar* Ursa Major. - *ʔid-dubbⁱ il-ʔaṣɣar* Ursa Minor. - *laqeet id-dibbⁱ yqazqaz libb* I found the bear cracking *libb* with his teeth (part of a children's rhythm chant - see *dabb*).
دبّة *dibba, dubbaˀ* /n pl *-aat*/ female bear, (loosely also) any bear.

د ب ب [4]
دبّان *dibbaan* /coll n/ flies. *niff id-dibbaan* shoo off the flies! *ɣaṭṭi l-ʔaklⁱ la-ẏɛiffᵃ ɛalee ʔid-dibbaan* cover the food lest the flies settle on it! ‖*bi-ytxaaniq maɛa dibbaan wiff-u* ≈ he is very short-tempered. - *ʔid-dibbaan il-ʔazraq ma-yiɛraf-luu-f gurra* (the flesh flies do not know his spoor) he's disappeared without trace. - *(qaaɛid) bi-yniff id-dibbaan* he has no customers (of a trader), business is slack.
دبّانة *dibbaana* /n pl *-aat*/ **1** /unit n/ a fly. ‖*dibbaanit ik-kalb* horse-fly. **2** (also *sinnⁱ (naml) id-dibbaana*) bead (on a rifle).
ذبابة *zubaabaˀ* /n/ fly. ‖ *ʔiz-zubaaba ṭ-ṭayra* blind spot (in the eye). - *wazn iz-zubaaba* flyweight (in boxing etc.).

د ب ب و ر
دبّور *dabbuur* /n pl *dababiir, dababiir*/ **1** wasp. *dabbuur ʔaḥmar* hornet. *dabbuur ʔazraq* cuckoo wasp or ruby-tailed wasp. *dabbuur ʔaṣfar* paper wasp. *dabbuur il-xaʃab* carpenter bee. *dabbuur zannᵃ ɛala xaraab ɛiff-u [prov]* (a wasp buzzed till its nest was destroyed) ≈ he asked for it. *dabbuur zannᵃ ɛala ḥagar misann [prov]* (a wasp buzzed over a whetstone) ≈ you can't get blood out of a stone. **2** philanderer. *huwwa ʔakbar dabbuur fil-balad* he's the biggest skirt-chaser in town. **3** wooden spinning top operated with a string (as opposed to a whip - cf *naḥla*).
دبّورة *dabbuura* /n pl *dababiir, dababiir, dabburaat*/ **1** star of rank (on a uniform). *ẓaabiṭ bi-dabburteen* a first-lieutenant. *xad dabbuura* he got an extra pip. **2** scabbling hammer.

د ب ج
ديباج *dibaagˀ* <P *dîbâ*> /n pl *dayabiig*/ brocade, silken cloth.
ديباجة *dibaaga* <P *dîbâja*> /n pl *-aat*/ fulsome preliminary, prologue, preface (to remarks). *gayyⁱ ɛamil-li dbaaga* he came to me humming and hawing. *balaaf id-dibaaga di* stop beating about the bush!
دبّج *dabbig* **1** /vt/ to compose, formulate (in good style). *dabbig-lu xuṭba* he composed an eloquent speech. **2** /vi/ to engage in fulsome preliminaries. *balaaf tadbiig* ≈ come to the point! - vn *tadbiig*; ava/pva *midabbig*.

د ب ح [1]
ذبح، ديح *dabaḥⁱ (a)* /vt/ **1** to cut the throat of (especially an animal, to slaughter it for food). *ʔid-dabḥ if-farɛi* slaughter of animals according to Islamic law. ‖*ma-yiqdar-fⁱ yidbaḥ farxa* ≈ he wouldn't harm a fly. - *da-nta tistaahil id-dabḥᵃ ɛala kida* ≈ you deserve every conceivable punishment for that! **2** to deal harshly with (in money matters). *huwwa dabaḥ-ni fil-beeɛa di* ≈ he took me for every penny I was worth over the sale. - vn *dabḥ, dibiiḥ, dibḥiyya*; ava *daabiḥ*; pva *madbuuḥ*.
ذبح، ديح *dabḥ* /n/ *[magic]* sacrifice. *ɛaleek dabḥ* you have to bring a sacrifice (i.e. a chicken or the like to be sacrificed at a *zaar*).
ذبحة، دبحة *dabḥaⁱ* /pl *-aat*/ instance noun of *dabḥ*.
ذبحة *zabḥa: zabḥa ṣâdriyya [path]* angina pectoris.
ذبحيّة، دبحيّة *dibḥiyya* /n/ *[non- Cairene]* point where a throat is cut in ritual slaughter.
ذبيح، ديبح *dibiiḥ* /coll n/ **1** carcass(es) of slaughtered animal(s). **2** meat of animals slaughtered for consumption especially during *ɛiid il-ʔaḍḥa* and *ɛiid il-fiṭr*.
ذبيحة، دبيحة *dibiiḥa* /unit n, pl *dabaayiḥ*/ a carcass of a slaughtered animal.
ذبيحة *zabiiḥaˀ* /n pl *zabaaʔiḥ*/ *[Chr]* sacrifice (of the Eucharist).
ذبّاح *dabbaaḥ* **1** /n */ slaughterer. **2** /adj */ given to charging exorbitant prices.
مذبح، مدبح *madbaḥ* /n/ **1** slaughter-house. **2** point where a throat is cut in Islamic ritual slaughter. *laazim yitḥallil min madbaḥ-u* it must have its throat cut at the proper place in order to be acceptable in religion as food.
مذبح *mazbaḥ* /n pl *mazaabiḥ*/ *[Chr]* altar.
مذبحة، مدبحة *madbaḥa, mazbaḥa* /n pl *madaabiḥ, mazaabiḥ*/ massacre.
اتذبح *ʔitdabaḥⁱ* or *ʔiddabaḥⁱ* /vi/ to be slaughtered. - iva *mitdibiḥ*.
انذبح، اندبح *ʔindabaḥⁱ* = *ʔitdabahⁱ*. - iva *mindibiḥ*.
ذبّح، دبّح *dabbaḥ* /vt/ to cut the throat of (a number of things). *dabbaḥ-hum waaḥid waaḥid* he slaughtered

them one after the other. - vn *tadbiiḥ*; ava/pva *midabbaḥ*.

اتدبّح *ʔitdabbaḥ* or *ʔiddabbaḥ* /vi/ to have the throat cut (of a number of things). - iva *mitdabbaḥ*.

د ب ح [2]

دبح، ضبح *dabaḥ[2], ḍabaḥ (a, a)* /vt/ to lose (one's voice). *dabaḥt' ṣoot-i ɛaleek* I shouted myself hoarse calling you. - vn *dabḥa, ḍabḥa*; ava *daabiḥ, ḍaabiḥ*; pva *madbuuḥ, maḍbuuḥ*.

دبحة، ضبحة *dabḥa[2], ḍabḥa* /n/ case of hoarseness.

اتدبح، اتضبح *ʔitdabaḥ[2]* or *ʔiddabaḥ[2], ʔitḍabaḥ* or *ʔiḍḍabaḥ* /vi/ to be lost (of the voice). - iva *mitdibiḥ, mitḍibiḥ*.

اندبح، انضبح *ʔindabaḥ[2], ʔinḍabaḥ = ʔitdabaḥ[2], ʔitḍabaḥ*. - iva *mindibiḥ, minḍibiḥ*.

د ب د ب [1]

دبدب *dabdib'* /vi/ to make a repeated banging, thudding or stamping (with the feet). *miin illi naazil yidabdib ɛas-sillim* who is that clomping down the stairs? - vn *dabdaba*; ava *midabdib*.

د ب د ب [2]

دبدب *dabdib[2]* /vt/ to sharpen to a point. - vn *dabdaba*; ava/pva *midabdib*.

دبدوبة *dabduuba'* /n pl *dabadiib*/ **1** sharp point. *dabduubit il-lisaan* the tip of the tongue. ‖*wiqiɛ fi-dabadib-ha* he fell madly in love with her. **2** fragment, particle, small fraction.

دبدوبيّة *dabdubiyya* /n pl *-aat*/ sharp point (e.g., of a needle).

د ب د ب [3]

دبدوب *dabduub* /n/ *[children]* bear, teddy bear.

دبدوبة *dabduuba[2] = dabduub. ʔid-dibba d-dabduuba* ≈Mr Bear (in children's stories).

د ب ر [1]

دابر *daabir* /n pl *dabaayir*/ trace. *ʔitḍaṭaɛ dabir-hum mil-balad* they were entirely removed from the country.

دبّر *dabbar* /vt/ to think out a plan for, arrange. *dabbaruu-lu muʔamra* they set up a conspiracy against him. *laazım tidabbar ʔumur-ha dilwaqti* she must put her affairs in order right now. *lamma tfuut ɛalayya waqt' taani ʔakuun dabbart' nafs-i w-mustaɛidd' l-kull[a] ḥaaga* when you call another time, I'll have put myself in order and be ready for anything. ‖*rabb-i-na ydabbar* may Our Lord provide a solution! - *mudabbir il-ḥaal* Settler of Affairs (epithet of God). - *ʔil-ɛabd' fit-tafkiir wir-rabb' fit-tadbiir* man proposes, God disposes. - *tadbiir manzili* domestic science, home economics. - vn *tadbiir*; ava *midabbar, mudabbir↑*; pva *midabbar, mudabbar↑*.

تدبير *tadbiir* /n pl *tadabiir, tadbiraat*/ arrangement. ‖*dabbar-ni ya waziir.* - *ʔit-tadbiir li-llaah ya malik* 'Tell me what to do, O Vizier!' 'Guidance is for God to give, O King!' (a formula commonly met with in stories).

مدبّر *mudabbir* /adj/ thrifty, provident. *sitt' beet mudabbira* a thrifty housewife.

اتدبّر *ʔitdabbar* or *ʔiddabbar* /vi/ to be arranged, be settled. *wala yhimm-ak - titdabbar* don't worry, it'll turn out O.K. - iva *mitdabbar*.

د ب ر [2]

دبر *dubur* /n pl *ʔidbaar, ʔadbaar↑*/ back, rear, buttocks, anus. *wallu l-ʔadbaar* they turned their backs and ran away.

د ب ر [3] see د ب ا ر: *dubaara*

د ب ر [4] see د ب ب و ر: *dabbuur, dabbuura*

د ب ر ي -

دبرياج *dibriyaaj* <Fr *débrayage*> /n pl *-aat*/ *[auto]* clutch. *ʔid-dibriyaaj bi-yfawwit* the clutch is slipping.

د ب س [1]

دبّوس *dabbuus* /n pl *dababiis*/ **1** pin. *dabbuus ʔibra* straight pin. *dabbuus rasm* drawing-pin, thumb-tack. *dabbuus maʃbak* or *dabbuus ingliizi* safety-pin. *dabbuus faransaawi* brad (for paper). *dabbuus faɛr* hairpin. *dabbuus dabbaasa* staple. *dabbuus saqya* vertical axle of a water wheel (see Pl.E, 4). ‖*xad dabbuus* he had a dirty trick played on him. **2** clip, brooch. *dabbuus ʔalmaaẓ* diamond clip. *dabbuus karafatta* tie-pin, tie clip. **3** drumstick (of a cooked bird).

دبّوسة *dabbuusa* /n/ **1** point of a shoulder or hip. **2** drumstick (of a cooked bird).

دبّاسة *dabbaasa* /n pl *-aat*/ stapler.

دبّس *dabbis* /vt/ **1** to pin. *ḥuṭṭ-i-lu l-fuuṭa w-dabbis-ha* put a towel on him and pin it on. ‖*dabbis-li tuhma* he pinned a charge on me. **2** to staple. **3** to draw (s.o.) into a liability. *dabbis-ni f-ɛafara gneeh* he wormed ten pounds out of me. - vn *tadbiis*; ava/pva *midabbis*.

تدبيسة *tadbiisa* /pl *-aat*/ instance noun of *tadbiis*.

اتدبّس *ʔitdabbis* or *ʔiddabbis* /vi/ **1** to be pinned. **2** to be stapled. **3** to be landed with a liability. *ʔitdabbist' ḥittit diin tadbiisa* I was really put on the spot.

ʕil-muwaẓẓafiin xaragu w-ʕana lli tdabbist^{i} fiʃ-ʃuɣl the employees left and I was the one who got landed with the work. - iva *mitdabbis*.

د ب س ^{2}
دبس *dibs* <Engl *dip stick*> /n/ rod for measuring petroleum in a storage tank.

د ب ش ^{1}
دبش *dabʃ* <Copt> /n/ rough-cut limestone. *dabʃ^{i} mrawwim* quarry stone cut to standard sizes. ‖ *kalaam zayy id-dabʃ* crude and insensitive talk.
دبشة *dabʃa* /n/ **1** /unit n, pl *-aat*/ a piece of rough-cut limestone. **2** /no pl/ a type of mango.
دبشاية *dabʃaaya* = *dabʃa* 1.
دبّاش *dabbaaʃ* /n * and pl *dabbaaʃa*/ one who talks crudely and insensitively.
دبّش *dabbiʃ* **1** /vt/ to cover with a layer of *dabʃ* (in road building etc.). *bi-ydabbiʃu ṭ-ṭariiq wi-baɛdeen yisaflituu* they put a layer of *dabʃ*, and then a layer of asphalt, on the road. **2** /vi/ to indulge in crude and insensitive talk. *dayman yidabbiʃ fik-kalaam* he's always rude and insolent. - vn *tadbiiʃ*; ava/pva *midabbiʃ*.

د ب ش ^{2}
دبش *dabaʃ* <T *dübeş*> /n pl *-aat, dibíʃa, dubúʃa*/ pair of fives (in backgammon).

د ب ش ك
دبشك *dibʃik* <T *dipçik*> /n pl *dabaaʃik*/ rifle butt.

د ب غ
دبغ *dabaɣ (u)* /vt/ **1** to tan (leather). **2** to tan (the skin, of the sun). — /vi/ **3** to eat gluttonously. *bi-yudbuɣ dabɣ^{i} wi-yquul ma-kalt^{i}-ʃ* he eats enormously and says 'I haven't eaten'. - vn *dabɣ, dibaaɣ, dibaaɣa, dabaɣaan*; ava *daabiɣ*; pva *madbuuɣ*.
دباغ *dibaaɣ* **1** /n/ tanning solution. **2** /coll n/ tanned goods.
دبغة *dabɣa* /n pl *-aat*/ **1** tanning solution. **2** /inst n/ a tan.
دبّاغ *dabbaaɣ* /n */ **1** tanner. **2** glutton.
مدبغة *madbaɣa* /n pl *madaabiɣ*/ tannery.
مدابغي *madabɣi* /n pl *-yya*/ tanner.
اتدبغ *ʔitdabaɣ* or *ʔiddabaɣ* /vi/ **1** to be tanned (of leather). **2** to be tanned (of the skin, by the sun). - iva *mitdibiɣ*.
اندبغ *ʔindabaɣ* = *ʔitdabaɣ*. - iva *mindibiɣ*.

د ب ق
دبق *dabaq (u, a)* /vt/ to trail, shadow, stick closely to. *ʔil-ɛaskari tann-u dabiq-ni l-ɣaayit il-beet* the policeman shadowed me all the way to the house. - vn *dabaqaan*; ava *daabiq*.
¶ *dabaq fi-* to lay hold of. *dabaq fi-raqabt-i* he seized me by the neck.
اتدبق *ʔitdabaq* or *ʔiddabaq* /vt/ **1** to trail, shadow, stick closely to. **2** to pick on, single out for unfavourable treatment. *ʔinta dayman mitdibiq il-ɛayyil kida leeh* why are you always picking on the kid like that? - ava *mitdibiq*.
اندبق *ʔindabaq* = *ʔitdabaq*. - ava *mindibiq*.
دبّق *dabbaq* /vt/ to save up. *ḥ-aḥaawil ʔadabbaq-lak il-mablaɣ* I'll try and get together the money for you. ‖ *dabbaqi ya xayba lil-ɣayba [prov]* ≈ why bother, foolish woman, to scrimp and save when your husband will take all the money to spend on some other woman? i.e. don't put yourself to trouble when the benefit will go to a rival. - vn *tadbiiq*; ava/pva *midabbaq*.
تدبيقة *tadbiiqa* /n/ savings. *ḍayyaɛ ɛaleeha tadbiiqit il-ɛumr* he spent his life-savings on her.
اتدبّق *ʔitdabbaq* or *ʔiddabbaq* /vi/ **1** to be saved up (of money). **2** to get hold, gain possession (especially of money). *ʔiddabbaq-lu ɛala ʔirfeen sulfa* he managed to get together a bit of money by borrowing. - ava/iva/pva *middabbaq*.

د ب ك
دبكة *dabaka* /n/ fuss, commotion.

د ب ل ^{1}
دبلة *dibla* /n pl *dibal, diblaat*/ **1** ring or band of one width (in contrast with *xaatim* (q.v.) in the case of a ring for the finger). *ḥalaq dibla* plain earrings passing through the lobe of the ear. *dibal lis-sataayir* curtain rings. **2** loop (intra-uterine device). **3** /also pl *dubal*/ anus. ‖ *ʔabu d-dubal* pederast.

د ب ل ^{2}
دوبل *dubl* <Fr *double*> /adj invar/ **1** double, double-size. *ɋahwa dubl* a double-size cup of coffee. **2** par excellence, to a high degree. *ʔakla dubl* a real meal. *ɛalɋa dubl* a good hiding. *raagil dubl* a fine man. — /n pl *-aat*/ **3** *[auto]* pair of double wheels. *ʔid-dubl il-ɋuddamaani* the front pair of double wheels.

د ب ل ^{3}
دبل، ذبل *dibil (a)* /vi/ to wilt. *ʔin diblit il-warda riḥit-ha fiiha [prov]* (even if the rose wilts, it has its scent) good

breeding shows in any circumstances. - vn *dubuul, dibuul, dabalaan*; ava *dablaan*.
دبّل، ذبّل *dabbil* /vt/ to cause to wilt or wither. *ʔil-ɛaṭaf dabbil iz-zarɛ* drought caused the plants to wither. - vn *tadbiil*; ava/pva *midabbıl*.
استذبل، استدبل *ʔistadbil* /vt/ **1** to consider wilted or withered. *ʔistadbilit il-faṣulya wi-ftarit badalha baṭaaṭis* she thought that the beans were too withered so she bought potatoes instead. **2** to select for wiltedness or witheredness. *ʔil-fakahaani l-xabiis baɋa yistadbil wi-ydiss' f-kiis il-mooz* the deceitful fruit-seller went on choosing the withered bananas and slipping them into the bag. - ava *mistadbil*.

د ب ل ا ق
دبلاق *diblaaɋ* /coll n/ palm-fibre rope(s) (used in particular for securing scaffolding boards).

د ب ل ا ن
دبلان *dabalaan* /n/ plain white calico.

د ب ل ج
دوبلاج *dublaaj* <Fr *doublage*> /n/ *[cin]* dubbing.
دبلج *dablij, dablig* /vt/ *[cin]* to dub. - vn *dablaja, dablaga*; ava/pva *midablij, midablig*.
اتدبلج *ʔitdablij, ʔitdablig* or *ʔiddablij, ʔiddablig* /vi/ *[cin]* to be dubbed. - iva *mitdablij, mitdablig*.

د ب ل ر
دبلر *dablar*[1] /n/ *[acad]* one who repeats a year (in school or college).
دوبلير *dubleer* <Fr *doublure*> /n/ *[cin]* stand-in.
دبلر *dablar*[2] /vi/ **1** *[cin]* to stand in. **2** *[acad]* to repeat a year (in school or university). - vn *dablara*; ava *midablar*.

د ب ل ق see د ب ل ا ق : *diblaaɋ*

د ب ل م –
دبلوماسي *diblumaasi* /adj */ **1** diplomatic. *ʔis-silk id-diblumaasi* the diplomatic corps. *ʔil-ɦaqiiba d-diblumasiyya* the diplomatic bag. **2** tactful. – /n */ **3** diplomat.
دبلوماسيّة *diblumasiyya* <prob Fr *diplomatie*> /n/ diplomacy. *fi-muntaha d-diblumasiyya* extremely tactful(ly).

د ب ل ن see د ب ل ا ن : *dabalaan*

د ب ل و م
دبلوم *dibloom, dubloom, dabloom* (also *dabloon*↓) <Fr *diplôme*> /n pl *-aat*/ diploma. *dibloom ɛaali* graduate or postgraduate diploma. *dıbloom mutawassiṭ* diploma below the standard of a university degree.
دبلوما *diblooma* = *dibloom*.

د ب ل و ن see د ب ل و م : *dabloon*↓

د ب ل ي ر see د ب ل ر : *dubleer*

د ب ي
دوبيا، دوبيه *dubya* <It *doppio*>: *[obsol]* *ɦisaab id-dubya* double-entry bookkeeping. *kaatib dubya* a double-entry bookkeeper.

د ب ي ا س
دوبياس *dubyaas* <Fr *deux pièces*> /adj invar/ two-piece. *fustaan dubyaas* two-piece outfit.

د ت و ر
داتورة *datuura* /coll n/ *[bot]* datura. - also *dahtuura, tatuura, ṭaṭuura*.

د ج ج
دجّج *daggiɡ*↑ /vt/ to arm fully. *daggig nafs-u bis-silaaɦ* he armed himself to the teeth. - vn *tadgiig*; ava/pva *midaggig*; pva *mudaggaɡ*↑.
اتدجّج *ʔitdaggig* or *ʔiddaggig* /vi/ to be fully armed. - iva *mitdaggig*.

د ج د ج
دجدج *dagdig* /vi/ to bump, be bumpy (of roads, cars etc.). *ʔil-ɛarabiyya mifyit ıdagdıg fiṭ-ṭariiɋ* the car bumped down the road. - vn *dagdaga*; ava *midagdig*.

د ج ل[1]
دجل *dagal* /n/ confidence trickery, charlatanism, deception, hocus-pocus.
دجّال *daggaal* /n */ confidence trickster, charlatan. || *ʔil-masiix* (or *ʔil-masiiɦ*) *id-daggaal* (or *ig-gaddaal*) the Anti-Christ.
دجّل *daggil* /vi/ to engage in swindling. *ma-nafaɛ-ʃ' fil-bandar raaɦ il-ʔaryaaf yidaggil ɛal-fallaɦiin* he couldn't make out in town so he went to the country to cheat the peasants. - vn *tadgiil*; ava *midaggil*.
مدجّلاتي *midaggalaati* /n pl *-yya*/ = *daggaal*.

د ج ل [2]
دجلة *digla* /prop n/ **1** area immediately to the east of el-Ma'adi. **2** the River Tigris.

د ج ن
داجن *daagin* /adj/ tame, domesticated. *ḥayawaan daagin* a domesticated animal.
دواجن *dawaagin* /pl n/ poultry. *ḥaẓiirit dawaagin* poultry run.

د ج و
دجى *duga: duga l-leel* the dark (of night).

د ح ح [1]
دحّ *daḥḥ* [1] *(i)* **1** /vi/ to toil. *ʕanbaḥ fi-ṣoot-i w-ʕadiḥḥ* [i] *w-ʕaṭfaḥ id-damm* I strain my voice, and slave, and sweat blood. *ɛammaal yidiḥḥ* [i] *fil-ʕakl* he is hard at it, wolfing down the food. **2** /vt/ to inflict (an action) with intensity on (s.o.). *daḥḥ-i-ni ɛalɋa* he gave me a terrific beating. *nazla tdiḥḥ* [i] *ftiima f-garit-ha* she goes on and on hurling insults at her neighbour. - vn *daḥḥ, daḥaḥaan*; ava *daaḥiḥ*.
دحّاح *daḥḥaaḥ* /adj * and pl *daḥḥaaḥa*/ slogging, toiling, hard-working but unintelligent.

د ح ح [2]
دحّ *daḥḥ* [2] /adj invar/ *[children]* good. ‖ *ʕis-saḥḥ id-daḥḥ (ya) xaruuf naṭṭaaḥ* child's chant for urging a ram to butt.
دحّة *daḥḥa* /adj invar/ *[children]* good, nice.

د ح ح [3]
دحّ *daḥḥ* [3] /coll n/ *[non-Cairene]* egg(s). *ʕilli ɛaayiz id-daḥḥ* [i] *ma-yɋul-ʃ* [i] *ʕaḥḥ [prov]* he who wants (hot, boiled) eggs should not say 'Ouch!'. see further under د ح ى

د ح د ح
دحدح *daḥdaḥ* /vt/ to budge, ease (s.o. or s.th.) away. - vn *daḥdaḥa*; ava/pva *midaḥdaḥ*.
اتدحدح *ʕitdaḥdaḥ* or *ʕiddaḥdaḥ* /vi/ **1** to go a little away, move oneself aside. *ḥa-niddaḥdaḥ biɛiid ɛan il-ḥitta w-nirkab min ɛand in-naṣya* we'll move along from here a bit, and get on (the bus) at the corner. **2** to be budged, be eased away. - vn *daḥdaḥa*; ava/iva *mitdaḥdaḥ*.

د ح د ر
دحدر *daḥdar* /vt/ **1** to cause to roll down. *ḥ-adaḥdar-ak ʕagiib-ak il-ʕarɋ* I'll knock you sprawling to the ground! **2** to cause to decline. *ʕil-xamra daḥdarit ṣiḥḥit-u* drink sapped his health. - vn *daḥdara*; ava/pva *midaḥdar*.
دحديرة *duḥdeera, duḥdeera* /n pl *daḥadiir, duḥderaat*/ (downward) slope. *min nuɋra l-duḥdeera [prov]* (out of the cranny on to the downward slope) ≈ out of the frying-pan into the fire.
دحدورة *daḥduura, daḥduura = duḥdeera*.
اتدحدر *ʕitdaḥdar* or *ʕiddaḥdar* /vi/ **1** to roll down. *raɋabt-u ddaḥdarit min ɛal-mixadda* his head slipped off the pillow. **2** to go into decline. *ʕaḥwaal-u middaḥdara* his circumstances have deteriorated. - ava *mitdaḥdar*.

د ح ر ج
دحرج *daḥrag* **1** /vt/ to roll, cause to roll. *daḥragit il-baramiil* barrel rolling. *daḥrag filuus-ak* roll your pennies! **2** *[naut]* to parbuckle, raise or lower using a parbuckle. - vn *daḥraga*; ava/pva *midaḥrag*.
اتدحرج *ʕitdaḥrag* or *ʕiddaḥrag* /vi/ to roll. - ava *mitdaḥrag*.

د ح ر ى ج
دحريج *duḥreeg* /n/ common vetch (the seeds of which frequently occur as an impurity in grain). *yaxdu l-ɋamḥ* [i] *ynaɋɋu minnu ṭ-ṭiin wid-duḥreeg* they take the wheat and pick the dirt and vetch seeds out of it.
دحريجة *duḥreega* /unit n, pl *-aat*/ a vetch seed.

د ح س see also د و ح س
دحس *daḥas (a)* /vt/ to shove, thrust, press (s.th. into s.th.). *daḥast* [i] *ʕiid-i guwwa g-guḥr* [a] *ɛaʃaan aɋfif il-ʕarnab* I pushed my hand into the hole to catch the rabbit. - vn *daḥs, daḥasaan*; ava *daaḥis*; pva *madḥuus*.
اتدحس *ʕitdaḥas* or *ʕiddaḥas* /vi/ to be shoved, thrust or pressed (into s.th.). - iva *mitdiḥis*.
اندحس *ʕindaḥas = ʕitdaḥas*. - iva *mindiḥis*.
داحس *daaḥis* /vi/ to push one's way, exert oneself. *daḥist* [i] *w-ʕana ṭaaliɛ il-ʕutubiis li-ḥadd* [i] *ma laɋeet maṭraḥ* I forced my way into the bus until I found a place. - vn *midaḥsa*; ava *midaaḥis*.

د ح ك
دحك، ضحك *diḥik (a)* /vi/ **1** to laugh, smile. *ḥa-nʃuuf miin fiina lli ḥa-yidḥak fil-ʕaaxir* we'll see which of us will laugh last! *ʕidḥak ɋabl id-diḥk* [i] *ma yixla* laugh before laughing becomes too expensive, laugh while you can. *ʕilli yidḥak in-nahar-da yɛayyaṭ bukra [prov]* he who laughs today will weep tomorrow. **2a** to jest.

da-ɧna b-nidɧak ya-xt-i maʕaaki we're just teasing you, dearie! **2b** to mock, laugh. *ma tibqa laṭiif wi-ma-tidɧak-ʃ' ʕalayya* why don't you be nice and stop making fun of me?! - vn *diɧk*; ava *daaɧik*; pva *madɧuuk*.

¶ *diɧik ʕala* to fool, cheat. *diɧik ʕala ʕaql-u-hum bi-kilmiteen* he deceived them with a few words. *ʃid-diɧk[a] ʕad-duquun* making fools of people. *ʃid-diɧk[a] ʕal-ʕiwala fayda [prov]* fooling fools is legitimate (because they ask for it). *kaan madɧuuk ʕaleena* we were cheated.

ضحكة، دحكة *diɧka* /inst n, pl *-aat*/ laugh, a smile. ‖*xallaa-ni diɧka been in-naas* he made me a laughing-stock.

ضحّيكة، دحّيكة *duɧɧeeka, duɧɧeeka* /n/ object of laughter or ridicule. *ɧaasib ʃana miʃ id-duɧɧeeka btaʕt-ak* just watch it! I'm not here for you to make fun of.

مضحكة *madɧaka, maḍɧaka* /n/ **1** place of laughter. *ʃiɧna f-maktab - ɧa-tiḍlibuu madɧaka* we're in an office; are you going to turn it into a joke shop! **2a** comic situation, farce. *ɧa-tiḍlibu l-igtimaaʕ madɧaka* do you want to turn the meeting into a comedy act? **2b** object of laughter. *xallat-ni madɧakit-ha* she made me the butt of all her jokes.

اتضحك، اتدحك *ʃitdaɧak* or *ʃiddaɧak, ʃitḍaɧak* or *ʃiḍḍaɧak: ʃitdaɧak ʕalee (ʕaleeha* etc.) he (she etc.) was fooled, was cheated. *ʃana miʃ min illi b-yiddiɧik ʕaleehum* I'm not the type to be fooled. - iva *mitdiɧik*.

انضحك، اندحك *ʃindaɧak = ʃitdaɧak*. - iva *mindiɧik*.

ضحّك، دحّك *daɧɧak, ḍaɧɧak* /vt/ to make (s.o.) laugh. *kalaam yidaɧɧak* laughable talk. ‖ *ʃallaah yidaɧɧak-ak* ≈ you make me laugh! - vn *taḍɧiik, taḍɧiik*; ava/pva *midaɧɧak, miḍaɧɧak*.

اتضحّك، اتدحّك *ʃitdaɧɧak* or *ʃiddaɧɧak, ʃitḍaɧɧak* or *ʃiḍḍaɧɧak* /vi/ **1** to be made to laugh. **2** to act coquettishly. *yaama ʃiddaɧɧakit maʕa da w-da w-hiyya ʂɣayyara* how many men she flirted with when she was young! - ava/iva *mitdaɧɧak, mitḍaɧɧak*.

¶ *ʃitdaɧɧak ʕala* to poke fun at. *ḍaʕadu yitdaɧɧaku ʕaleeha f-ɣiyab-ha* they poked fun at her in her absence.

د ح ل

داحل *daaɧil* /vi/ to make an effort, strain one's wits. *muʃkila tann-u ydaaɧil lamma ɧall-a-ha* a problem which he kept struggling with until he solved it. - vn *midaɧla*; ava *midaaɧil*.

اتداحل *ʃitdaaɧil* or *ʃiddaaɧil = daaɧil*.

د ح ل ب

دحلب *daɧlib, daɧlab* /vt/ to sneak, insinuate. *daɧlib ʃiid-u f-geeb-u* he slipped his hand in his pocket. - vn *daɧlaba*; ava/pva *midaɧlib*.

دحلاب *diɧlaab* /adj pl *daɧaliib*/ blandiloquent, smooth-tongued, unctuous, sly.

اتدحلب *ʃitdaɧlib* or *ʃiddaɧlib* /vi/ to sneak in. *yiddaɧlib zayy it-taʕlab* he moves in stealthily like a fox. *ʃin-naas iddaɧlibu ḍuddaami fiṭ-ṭabuur* people slipped in before me in the queue. - ava *mitdaɧlib*.

¶ *ʃitdaɧlib ʕala* to make up to (s.o.). *ḍaaʕid yiddaɧlib ʕaleeha lamma baʕit-lu l-beet* he kept on making up to her until she sold him the house.

د ح ى

see also [3] د ح ح

دحى *daɧɧi, daɧy = daɧɧ*[3].

دحية *daɧya* /unit n, pl *-aat*/ an egg.

دحّى *daɧɧa* /vi/ to lay eggs. *ʕandina farxa bi-tdaɧɧi yomaati* we have a hen that lays every day. - vn *daɧy*; ava *midaɧɧi*.

د خ خ ن ى

see [1] د خ ن : *daxaxni*

د خ ر

ذخرة *zaxra = zaxiira*.

دخير *dixiir* /n/ gunpowder.

ذخيرة *zaxiira* /n pl *zaxaayir*/ **1** ammunition. *zaxiira ɧayya* live ammunition. **2**↑ treasured thing.

ادّخر *ʃiddaxar* /vt/ to save, conserve. *law tiddixir maʕaahum taaxud nisba ʃaʕla* if you save with them you'll get a higher rate. *ʃiddixir nafaaṭ-ak lil-mubaraah* save your energy for the match! - vn *ʃiddixaar*; ava *middixir*; pva *muddaxar*↑.

ادّخار *ʃiddixaar* /n pl *-aat*/ **1** savings. *daftar iddixaar* savings book. **2** superannuation.

ادّخارى *ʃiddixaari* /adj/ pertaining to saving.

مدّخرات *muddaxaraat* /pl n/ savings.

د خ ش ب

دخشاب *duxʃaab* /n pl *daxaʃiib*/ wooden implement used by a pickle maker to agitate the vegetables in the brine.

دخشب *daxʃib* /vt/ to treat (vegetables) by using a *duxʃaab*. - vn *daxʃaba*; ava/pva *midaxʃib*.

اتدخشب *ʃitdaxʃib* or *ʃiddaxʃib* /vi/ to be treated with a *duxʃaab*. - iva *mitdaxʃib*.

د خ ل

دخل *daxal (u)* **1** /vt and vi/ to go in(to), enter. *daxalit (fi-)maɧall* she went into a shop. *ʃiɧna daxalna (fi-)ɧarbeen ḍabl' kida* we've entered two wars before

this. *daxalt[a] ʕaleehum il-ʃooḍa* I went into the room where they were. *ʃudxuli min ʕatabit il-baab* come in from the doorway! *ʃin-nuur bi-yudxul taḥt il-ʏaṭa* the light comes in under the lid. *mamnuuʕ id-duxuul* no entry. *ʃif-ʃita daaxil* winter is approaching. ‖*daxal imtiḥaan* to sit for an exam. - *daxal maʒaag-u* to take one's fancy, as in *ʃil-bitt[i] daxalit maʒaag-i w-miʃ ḥ-aaxud ʏer-ha* the girl has taken my fancy and I'll marry no other. - *ma-daxal-ʃ[i] dinya* he's had no experience with a woman. - *ʃid-daxla wil-xarga* the ins and outs, the details. - *ḥaaga miʃ daxla dmaaʏ-i* (or *muxx-i*, or *ʕaḳl-i*) (1) something I can't figure out. (2) something I can't accept. **2** /vi/ to consummate a marriage, begin cohabitation. *baʕd[i] mudda niktib ik-kitaab wi-ngahhiz wi-nudxul* after a while we write the contract, buy the *gihaaz* (q.v., sense 5) and consummate the marriage. - vn *daxla, duxuul*; ava *daaxil*.

¶ *daxal fi-* (1) to be a matter for, be the responsibility of, as in *da ʃeeʃ yudxul fi-ʃiraadit illaah* that is in God's hands. (2) to enter into, embark upon, as in *daxal maʕaahum fi-siin wi-giim* he set about questioning them. (3) to collide with, crash into, clash with, as in *ʃil-ʕarabiyya daxalit fil-ḥeeṭa* the car crashed into the wall, *w-ana b-akkallim fit-tilifoon waaḥid daxal fil-xaṭṭ* while I was speaking on the phone someone else came on the line (as a result of crossed lines). (4) to attack, set about, fall upon, as in *daxal fil-ʃakl[i] b-ʃidee w-riglee* he gobbled up the food, *daxal fiina ʃmaal* he rode roughshod over us. - *daxal ʕala* to deceive, as in *kalaam-u daxal ʕalayya* I was taken in by his words. - *daxal been* to intervene between, as in *ya daaxil been il-baṣala w-ḳifrit-ha ma-ynuub-ak ʃilla ṣannit-ha [prov]* (you who push yourself in between the onion and its skin will only get the smell) if you interfere in other people's business you'll be sorry.

دخلة *daxla* /n/ entrance. *beet daxlit-u ʃarḳiyya* a house whose entrance faces east.

داخل *daaxil[i]* **1** /n/ inside. *fi-daxl-u* inside it. *maṭli min id-daaxil bi-loon ʃabyaḍ* painted white on the inside. **2** /prep/ inside. *dawaayir daaxil baʕḍ-a-ha* concentric circles.

الداخلة *ʃid-daxla* /prop n/ the Oasis of Dakhla, the most populous of the oases of the Western Desert.

داخلي *daxli, daaxili* /adj/ internal. *huduum daxliyya* underclothes. *siyaasa daxliyya* internal policy. *naziif daxli* internal haemorrhage. *ʃiṭṭilaaʕ daxli* reading (but not borrowing) rights (at a library). *ʃiḥtiraaq daaxili* internal combustion. *ʕiyaada daxliyya* in-patient clinic. ‖*madrasa daxliyya* boarding school.

داخليّة *daxliyya, daaxiliyya↑* /n/ **1** internal affairs. *wizaarit id-daxliyya* the Ministry of the Interior. **2** *ʃid-daxliyya [joc]* the wife.

داخليّات *daxliyyaat* /pl n/ private affairs, confidential matters. *xalla kull[i] ʃasraar-u w-daxliyyaat-u maʕaaya* he confided in me all his secrets and private affairs.

دخل *daxl* /n/ **1** legitimate concern, involvement. *daxl-u ʃeeh fi-da* what business of his is that? *ma-lii-ʃ daxl[i] b-ʃasaami* names are no concern of mine. **2** /pl *duxuul*/ income, revenue. *ḳariibit id-daxl* income tax.

دخلة *duxla* /n/ consummation of marriage, beginning of cohabitation (of a married couple). *leelit id-duxla* wedding-night.

دخيل *daxiil* **1** /adj/ intrusive. *ʃik-kamangaat di daxiila ʕaleena* these violins have come to us from outside. *kilma daxiila* loan word. ‖ *ʃil-ʕammi wid-daxiil* colloquial language and loan words. **2** /n pl *duxala*/ intruder, outsider. *ʃid-duxala ma-yitkallimuu-ʃ* those who have nothing to do with us should keep silent!

دخيلة *daxiila* /n pl *daxaayil*/ intrinsic nature.

مدخل *madxal* /n pl *madaaxil*/ **1** approach, entrance, entrance hall. **2** introduction. *ʃik-kalaam luu madaaxil* there are (proper) ways to broach a subject. **3** *[elec]* induction coil.

دخّل *daxxal* /vt/ to cause to enter. *daxxal if-ʃooka fi-ṣbaaʕ-u* he got the thorn stuck in his finger. *bi-ydaxxal il-markib il-miina* he takes the boat into harbour. *ʃil-maḥbas bi-ydaxxal il-mayya ʕala s-sifoon* the stop cock admits the water to the cistern. ‖ *ʃeeʃ daxxal-ni* what's it got to do with me? - vn *tadxiil*; ava *midaxxal*.

اتدخّل *ʃitdaxxal* or *ʃiddaxxal* /vi/ to interfere, intervene. *miʃ mafruuḳ yiddaxxalu f-kull[a] ḥaaga* they are not supposed to interfere in everything. - vn *tadaxxul*; ava *mitdaxxal*.

¶ *ʃitdaxxal been* to mediate between. *ʃitdaxxal benhum wi-nhi l-mawḍuuʕ* mediate between them and put an end to the matter!

داخل *daaxil[2]* /vt/ to interwine. - vn *midaxla*; ava *midaaxil*.

اتداخل *ʃitdaaxil* or *ʃiddaaxil* /vi/ **1** to interfere. *ʃilli yiddaaxil been in-naas yaama yindaas [prov]* you get nothing but put-downs from interfering with people. **2** to be or become intermixed, intermingled, or intertwined. *ʃalwaan mitdaxla* mixed colours. ‖*xuṭuuṭ mitdaxla* crossed (telephone) lines. - vn *tadaaxul↑*; ava/iva *mitdaaxil*.

أدخل *ʃadxal↑ (i)* = *daxxal*. - commonly used in unelevated speech in the phrases *ʃeeʃ ʃadxal-ak fil-mawḍuuʕ* what has brought you into the matter? *ʃadxal taḥsinaat* (or *taʕdilaat*) to make improvements (or modifica-

tions), as in *ħa-nidxil taħsinaat ɛal-maħall* we're going to make improvements to the shop. - vn *ʔidxaalʔ*; ava *mudxil*.

د خ م س

دخمس *daxmis* **1** /vt/ to dim. *daxmis il-lamba* turn the lamp down low! **2** /vi/ to become dim. *ʔil-lamba daxmisit* the lamp burnt low. *ʔil-leel daxmis* the night thickened. ‖*dimaaɣ-i daxmisit* I felt at a low ebb. - vn *daxmasa*; ava *midaxmis*.

¶ *daxmis li- [coarse]* to copulate with, lay (a woman). - *daxmis ɛala* to hoodwink. ‖*ħa-tdaxmis ɛala baaba* ≈ who are you trying to fool?

اتدخمس *ʔitdaxmis* or *ʔiddaxmis* /vi/ to be dimmed or become dim. - ava/iva *mitdaxmis*.

د خ ن [1]

دخنة *daxana* /n/ smoke, haze, fumes.

دخّان *duxxaan* /n/ **1** smoke, fumes. *ʃaafu d-duxxaan wi-ballaɣu l-maṭaafi* they saw the smoke and notified the fire-brigade. ‖*ma-fii-ʃ duxxaan min ɣeer naar [prov]* there's no smoke without fire. - *ʔid-duxxaan il-ɋurayyib yiɛmi [prov]* ≈ you can't see the wood for for trees. **2** /pl *ʔadxina*/ tobacco. *duxxaan il-maqɣ* chewing tobacco. ‖*ħaqq id-duxxaan [euphem]* tip, pourboire.

دخّانة *duxxaana* /n/ smoke. ‖*ya duxxaana ruuħi ɛaggaɛaan [children]* smoke go to the hungry one! (doggerel said when smoke is seen).

دخاخني *daxaxni* /n pl *-yya*/ tobacconist. ‖*mixaaṣim iddaxaxni* not on speaking terms with the tobacconist (i.e. always cadging cigarettes).

مدخنة *madxana* /n pl *madaaxin*/ **1** chimney, (smoke) funnel. **2** /no pl/ chainsmoker.

دخّن *daxxan* /vt/ **1** to smoke (cigarettes etc.). **2** to fill with smoke, make smoky. *ʔinta daxxant il-ʔooḍa* you've made the whole room smoky! **3** to fumigate, smudge. — /vi/ **4** to give off smoke. *ʔil-lamba bi-tdaxxan* the lamp is smoking. ‖*ṣabaħ mıdaxxan* he got up in the morning fuming. - *manaxiir-u mdaxxana* he's very angry, he's breathing fire. **5** to fill up with smoke, become smoky. *ɛenay-ya daxxanit* my eyes became full of smoke. *ʔil-ʔooḍa daxxanit* the room filled with smoke. - vn *tadxiin*; ava/pva *midaxxan*.

مدخّن *midaxxan* /adj/ smoked, preserved by smoking (of cured meat, fish etc.). ‖*ħikayit-hum midaxxana* ≈ their story is infamous.

د خ ن [2]

دخن *duxn* /n/ millet.

د خ ن و ق

دخنوق *daxnuuq* /n pl *daxaniiq*/ corner niche, hole. ‖*daaxil fi-daxaniiq-u* he has wormed himself into his favour.

دخنوقة *daxnuuqa* /n/ small niche.

د د ب ا ن

ديدبان *dadabaan, didabaan* <P *dîdbân*> /n pl *-aat*/ sentry.

د د ى

دادى *daada*[2] /vt/ to humour, soothe. *ʃana ɛammaal ʃadaadi fii miṣ-ṣubħ' wala fii fayda* I've been handling him with kid gloves for a long time, to no avail. - vn *midadiyya*; ava *midaadi*.

اتدادى *ʔitdaada* or *ʔiddaada* /vi/ **1** to be soothed, be humoured. **2** to saunter. *ga yiddaada ɛala ʃaɋall' min mihl-u wala kaʃinn[a] ɛandu fuɣl* he came sauntering in at his ease, as if he had no work. - ava/iva *mitdaadi*.

د ر

درة، ذرة *dura* /coll n/ maize, corn. *dura ɛweega* curved sorghum, a name for varieties of Sorghum vulgare and Andropogon sorghum. *dura ʃaami* Indian corn (Zea mays). *dura maʃwi* (or *maɋli*) roasted corn-on-the-cob. *dura mfaʃʃar* popcorn. ‖*ʔil-ɛeef dura wik-kalaam ruumi [prov]* the bread is coarse, the talk highfalutin (of pretentiousness).

دروة *darawa* /n/ *[rur]* maize cut before maturity for use as green fodder.

د ر ا م

دراما *diraama* <prob Engl> /n/ melodrama.

درامى *diraami* /adj/ melodramatic.

د ر ب

درب *darb* /n pl *duruub*/ **1** path, way, route. ‖*darb il-ʃarbiɛiin* a route through the Western Desert from Sudan, passing through the Egyptian oases. **2** main lane (in a neighbourhood). ‖*ʔid-darb il-ʔaħmar* one of the main thoroughfares of the area of Cairo built up during the medieval period, now also the designation of the *ɋism* including most of that area.

درّابة *durraaba: baaba xuff' wi-ɋfil id-durraaba* (now it's the month of) Baaba, come in and close the gate (against the cold).

درّب *darrab* /vt/ to train, coach. *darrabt-u-hum ɛala ɋarb in-naar* I trained them to shoot. *tadriib ɛaskari* military training. *taħt it-tadriib* in training. ‖*mara*

mdarraba a hard-bitten bitch of a woman. - vn *tadriib*; ava/pva *midarrab*.

تدريب *tadriib* /n pl *-aat*/ training exercise, practice. *ʕig-giraaḥa ɛayza tadribaat ma-lhaa-f ḥadd* surgery requires endless practice.

تدريبى *tadriibi* /adj/ pertaining to training. *fatra tadribiyya* training period.

مدرّب *mudarrib* /n */ trainer, coach. *mudarrib ʕusuud* lion trainer. *mudarrib koora* football coach.

اتدرّب *ʕitdarrab* or *ʕiddarrab* /vi/ to be trained. - iva *mitdarrab*.

د ر ب ز

درابزين *darabziin* /n pl *-aat, -aat*/ **1** banister. **2** *[naut]* bulwark. - also *tarabziin*.

د ر ب ك

دربك *darbik* **1** /vt/ to reduce to chaos. *ʕil-ɛiyaal darbiku l-beet fi-ɤyaab-i* the kids made a shambles of the house while I was away. *ḥ-adarbik id-dinya ɛala dmaaɤ-ak* I'll get you into real trouble! **2** /vi/ to make a din or commotion. *ɛamal darbaka ɛal-faaḍi* he made a big fuss about nothing. - vn *darbaka*; ava/pva *midarbik*.

دربكة *darabukka* /n pl *-aat*/ small earthenware hand drum. ‖*fuɤl id-darabukka* coquettishness.

اتدربك *ʕitdarbik* or *ʕiddarbik* /vi/ to fall apart, collapse. *ʕid-dinya ddarbikit ɛala baɛḍ-a-ha* the world's a shambles, everything's in an uproar. *ʕiddarbik ɛas-sillim* he tumbled down the stairs. - ava *mitdarbik*.

د ر ب ك س

دربوكس *darabuks, darabuks* <prob Engl> /n pl *-aat*/ *[auto]* gear-box.

د ر ب ى ه

درابيه *darapeeh* <Fr *drapé*> /adj invar/ draped (style).

د ر ج ١

درج *darag*[1] *(u)* /vt/ **1** to break in, train. *baɛd*[i] *ma nudrug-u fif-fuɤl*[i] *fwayya yibqa yaaxud mahiyya* after we have given him a little training in the work he will start drawing a salary. **2** *[Isl]* to wrap (a corpse in a shroud). — /vi/ **3** to make a start. *min ʕawwil ma darag fil-waziifa* from when he first started in the job. - vn *darg, daragaan*; ava *daarig*; pva *madruug*.

¶ *darag ɛala* to become habituated to. *daragna ɛala kida min wi-ḥna ṣɤayyariin* we've been accustomed to such things since we were children.

دارج *daarig* /adj/ **1** popular, common (of speech, language). *ɛibaara darga* a popular expression. *ʕil-luɤa d-darga* the colloquial language. **2** *(ʕiqaaɛ) daarig [mus]* (a rhythmic mode) in three-quarter time consisting of a strong beat, a rest, and a weak beat, or in 6/8 time consisting of a strong beat, a rest, a weak beat, a strong beat, a rest, and a strong beat.

دارجة *darga* /n pl *-aat*/ headband (of a book).

درج *durg* /n pl *ʕadraag, diraag, duruug*/ drawer. *durg il-maktab* the desk drawer. ‖*durg*[i] *kabriit* a box of matches (as distinct from a booklet).

درج *darag*[2] /n/ **1** /coll n/ step(s), stair(s). **2** /pl *ʕadraag*/ layer of a burial shroud.

درجة *daraga, daraga* /n pl *-aat, -aat*/ **1a** /unit n/ a step. *sillim bi-sabaɛ daragaat* a stairway with seven steps. *daraga daraga* step by step. **1b** *[mus]* (whole) step. *nuṣṣ*[i] *daraga* half step. **2a** grade. *ʕiz-zeet daragaat wi-ʕanwaaɛ* oil comes in various grades and types. *tazkara daraga ʕuula* a first-class ticket. **2b** grade, rank. *murattab-u marbuuṭ ḥasab id-daraga* his salary is fixed according to his rank. *daragit ʕustaaz* professorship. *daragaat ik-kahanoot [Chr]* clerical orders. **2c** grade, mark (in an examination). *xad daraga ɛalya fil-imtiḥaan* he got a high mark in the examination. *daraga ɛilmiyya* (or *gaamiɛiyya*[↑]) academic degree. **3** degree, point (of measurement). *zawya tisɛiin daraga* a ninety-degree angle. *daragit il-ḥaraara* the temperature. *daragit inṣihaar* melting point. *li-ʕaaxir daraga* to the utmost degree, to the nth degree. *li-daragit ʕinn...* to the degree that ..., to the extent that ....

اتدرج *ʕitdarag* or *ʕiddarag* /vi/ **1** to be inserted, be included. **2** to be trained. - iva *mitdirig*.

اندرج *ʕindarag* = *ʕitdarag*. - iva *mindirig*.

درّج *darrag* /vt/ **1a** to give a stepped form to. *darragt*[i] *faɛr-u bil-miʃt*[i] *wil-maqaṣṣ* I tapered his hair with the comb and the scissors. **1b** to grade, graduate. *tadriig il-quṭn* cotton grading. *bi-ydarragu l-masaaṭir bis-santi wil-buuṣa* they mark off rulers in centimetres and inches. *ʕil-ḥukuuma bi-tdarrag il-muwaẓẓafiin* the government classifies employees by grades. **2** to move along (in a group). *darrag ik-kutub fiwayya* move the books along a bit! **3** to train (in). *bi-ndarrag-hum ɛaʃaan yibqu sufragiyya* we train them to be waiters. - vn *tadriig*; ava/pva *midarrag*.

تدريج *tadriig* /vn/ ‖*bit-tadriig* gradually.

تدريجه *tadriiga* /inst n, pl *-aat*/ stepped or layered haircut.

تدريجى *tadriigi* **1 2** /adj/ gradual. /adv/ gradually, by degrees.

مدرّج *mudarrag* /n pl *-aat*/ **1** amphitheatre, auditorium, lecture room, grandstand, stand (in a stadium). **2** *[mus]* register. *ʕil-mudarrag il-ɛaali* upper register.

ʃil-mudarrag il-wasaṭ middle register. *ʃil-mudarrag il-waaṭi* low or bass register.

اتدرّج *ʃitdarrag* or *ʃiddarrag* /vi/ passive of *darrag*. - iva *mitdarrag*.

أدرج *ʃadrag* /vi/ to insert, include. *ʃidrig ism-i fik-kaff* put my name on the list. - vn *ʃidraag*; ava *mudrig*; pva *mudrag*.

استدرج *ʃistadrag* or *ʃistadrig* /vt/ to draw (s.o.) out (with the purpose of eliciting information). *ʃistadragt-u (fik-kalaam) li-ɤaayit ma kaʃaf ɛan il-ħikaaya kull-a-ha* I led him on until he revealed the whole affair. - vn *ʃistidraag*; ava *mistadrag, mistadrig*; pva *mustadrag*ˀ.

د ر ج ²

درّاج *durraag* /coll n/ *[zool]* francolin.

درّاجة *durraaga* /unit n, pl *-aat*/ a francolin.

د ر ج ى

دورجى *durgi* <T *dört cihar*> /n pl *durgiyyaat*/ pair of fours (in backgammon).

د ر د ب

دردب *dardib* **1** /vt/ to cause to dribble, cause to trickle. *ma-tdardib-ʃ il-ɛaṣiir min buqq-ak* don't dribble the juice out of your mouth! **2** /vi/ to dribble, trickle. *ʃil-ħubuub dardibit miʃ-ʃuwaal* the grains trickled out of the sack. - vn *dardaba*; ava/pva *midardib*.

اتدردب *ʃitdardib* or *ʃiddardib* /vi/ to dribble, trickle. ‖ *ʃis-sakraan iddardib ɛas-sillim* the drunk fell sprawling down the stairs. - ava *mitdardib*.

د ر د ج

دردج *dardig* /vi/ to bump, be bumpy (of roads, old cars etc.). - also *dagdig*. - ava *midardig*.

د ر د ح

دردح *dardaħ* /vt/ to educate in the ways of the world, make sophisticated. *kaan fallaaħ itgawwiz bintˀ bandar dardaħit-u* he was a peasant (but) married a town girl who gave him some polish. - vn *dardaħa*; ava/pva *midardaħ*.

اتدردح *ʃitdardaħ* or *ʃiddardaħ* /vi/ to become or be made worldly-wise. - ava/iva *mitdardaħ*.

د ر د ر ¹

دردر *dardar* /vt/ to scatter, sprinkle. *bi-ydardar il-mashuuq ɛag-garħ* he sprinkles the powder over the wound. - vn *dardara*; ava/pva *midardar*.

اتدردر *ʃitdardar* or *ʃiddardar* /vi/ to be scattered, be sprinkled. - iva *mitdardar*.

د ر د ر ²

دردورة *darduura* **1** /n pl *daradiir*/ toothless gum. **2** *daradiir* /pl n/ milk teeth beginning to emerge through gums.

د ر د ر م see د ن د ر م : *dardurma*

د ر د ش

دردش *dardiʃ* /vi/ to chat. *qaɛdiin yidardiʃu zayyˀ ma ykuun ma-warahum-ʃˀ ʃuɤl* they keep on chatting as if they have nothing to do. -vn *dardaʃa*; ava *midardiʃ*.

د ر د ع

دردع *dardaɛ* /vt/ to give (a drink to s.o.) ungraciously or with accompanying curses. *huwwa ɛaawiz id-dawa - dardaɛuu-lu bis-simm* he wants the medicine, so let him bloody well have it! - vn *dardaɛa*; ava/pva *midardaɛ*.

اتدردع *ʃitdardaɛ* or *ʃiddardaɛ* /vt/ *[abus]* to gulp down, wolf down. *ʃidfaɛ taman illi ddardaɛt-u* pay up for what you've wolfed! - ava/pva *mitdardaɛ*.

د ر د ك

دردك *dardik = darbik*. - vn *dardaka*; ava *midardik*.

اتدردك *ʃitdardik* or *ʃiddardik = ʃitdarbik*. - ava *mitdardik*.

د ر د م

دردم *dardim* **1** /vt/ to fill up (especially with earth or the like). *dardimu n-nuqra bil-ħigaara* they filled in the hole with stones. **2** /vt and vi/ to cover over, bury. *rameena l-giifa fil-ħufra w-dardimna ɛaleeha* (or *dardimnaa-ha) bit-turaab* we threw the carcass into the hole and covered it over with earth. - vn *dardama*; ava *midardim*.

اتدردم *ʃitdardim* or *ʃiddardim* /vi/ to be covered over (with earth, stone etc.). - iva *mitdardim*.

د ر د ى

دردى *dirdi* <P *durdî*> /n/ dregs. ‖ *ħ-axalli nhaar-u dirdi* I'll give him hell!

د ر ر ¹

درّ *darr (i)* **1** /vt/ to cause to flow plentifully. *ʃil-biira bi-tdirr il-bool* beer acts as a diuretic. **2** to flow (of milk). - vn *darr, dararaan, ʃidraar*; ava *daarir, mudirr*.

درّة *darra* /n pl *-aat*/ udder.

إدرار *ʃidraar* /n/ yield (of milk).

مدرّ *mudirr* /n pl *-aat*/ diuretic.

د ر ر [2]
درّ *durr* /coll n/ pearl(s).
درّة *durra* [1] /unit n, pl *durar*/ a pearl. *kalaam-ak kull-u durar* all your words are pearls (of wisdom).
درّي *durri* /adj/ lustrous, shining (like stars). *ʃik-kawaakib id-durriyya* the gleaming stars.

د ر ر [3]
درّة *durra* [2] /n pl *-aat, durar*/ parrot.

د ر ر [4] see ز ر ر [2] : *durriyya*

د ر ز [1]
درز *daraz (i)* /vt/ to cram, jam, pack tightly. *daraz ʃi-ʃanṭa kutub* he stuffed the case full of books. *sinaan-u madruuza f-baʕḍ* his teeth are close together. - vn *darz*; ava *daariz*; pva *madruuz*.
درزة *darza* /inst n/ a jammimg. *kaanit iṣ-ṣaala madruuza darza* the hall was jam-packed.
اندرز *ʃindaraz* /vi/ to be crammed, be packed tightly. - iva *mindiriz*.
اتدرز *ʃitdaraz* or *ʃiddaraz* = *ʃindaraz*. - iva *mitdiriz*.
درّز *darriz* /vt/ to dent, make indentations in (s.th.) by pressure, carving etc. - vn *tadriiz*; ava/pva *midarriz*.
اتدرّز *ʃitdarriz* or *ʃiddarriz* /vi/ passive of *darriz*. - iva *mitdarriz*.

د ر ز [2]
درزي *durzi* /pl *duruuz*/ **1** /adj/ **1a** Druze, pertaining to the Druzes. **1b** hard-hearted, tight-fisted. **2** /n/ a Druze.

د ر س [1]
درس *daras* [1] *(i)* /vt/ to study. *fi-sana ʃuula b-yidris magmuuʕit ʕuluum muxtalifa* in the First Year he studies a number of different subjects. *ḥ-adris il-muzakkira* I'll study the memo. - vn *diraasa, dars*; ava *daaris*; pva *madruus*.
دراسة *diraasa* /n pl *-aat*/ **1** study (of a subject). *dirasaat ʃarqiyya* Oriental Studies. **2** (artistic) study. *ʃiṣ-ṣuura di draasa l-fallaaḥa maṣriyya* this picture is a study of an Egyptian peasant woman.
دراسي *diraasi* /adj/ pertaining to study. *ʃik-kutub id-dirasiyya l-muqarrara* the books set for study.
درس *daṛs* /n pl *duruus*/ lesson. *miʃ kifaaya d-dars illi tʕallimnaa fil-ḥarbeen illi faatu* isn't the lesson that we learned in the last two wars enough?
مدرسة *madrasa* /n pl *madaaris*/ **1** school. *ʃil-madaaris l-ibtidaʃiyya* elementary schools, primary schools. *ma niftaḥ madrasa fin-naʃl* let's open a school for picking pockets. **2** school of thought. *madaaris ʃadabiyya* literary schools.
مدرسي *madrasi* /adj/ pertaining to school or to school-teaching, pedagogical. ‖*tafkiir madrasi* shallow thinking.
اتدرس *ʃitdaras* [1] or *ʃiddaras* [1] /vi/ to be studied. - iva *mitdiris*.
اندرس *ʃindaras* [1] = *ʃitdaras* [1]. - iva *mindiris*.
درّس *darris* /vt/ to teach (a subject). *ḥ-adarris iṭ-ṭalaba tariix* I'll teach the students history. - vn *tadriis*; ava *midarris*.
مدرّس *mudarris* /n */ (school)teacher. *mudarris ʃawwal* senior teacher (in a subject). *mudarris xaaṣṣ* private teacher. *daragit mudarris [acad]* university rank equivalent to assistant professor (U.S.) or lecturer (U.K.). *mudarris luɣa* university language-teacher (without the status of a lecturer).
اتدرّس *ʃitdarris* or *ʃiddarris* /vi/ to be taught. - iva *mitdarris*.
اتدارس *ʃitdaaris* or *ʃiddaaris* /vi/ to give joint attention or consideration (to a subject). *baʕd* [i] *ma ddarisna fil-mawḍuuʕ ittafaqna ʕala ʃruuṭ maqbuula* after we studied the subject together we came to agreeable terms. - ava *mitdaaris*.

د ر س [2]
درس *daras* [2] *(i)* /vt/ to thresh. - vn *diraas*; ava *daaris*; pva *madruus*.
دريس *diriis* /n/ dried clover (used as animal feed).
اتدرس *ʃitdaras* [2] or *ʃiddaras* [2] /vi/ to be threshed. - iva *mitdiris*.
اندرس *ʃindaras* [2] = *ʃitdaras* [2]. - iva *mindiris*.

د ر س [3] see ض ر س : *dirs*

د ر س [4] see د ر ي س : *diriisa*

د ر س و –
درسوار *diriswaar* <Fr *dressoir*> /n pl *-aat*/ small sideboard.

د ر ش
درش *darʃ* (also *ʃabu darʃ*) /prop n/ nickname for Mustafa.

د ر ص ي ن
دارصيني *darṣiini* <P *dâr-chînî*> /n/ cinnamon.

د ر ع [1]

درع *dirɛ* /n pl *duruuɛ*/ **1** shield. *faaz bi-dirɛ il-quwwaat il-musallaḥa* he won the Armed Forces Shield (trophy). **2** (piece of) armour. *dirɛ' dabbaaba* tank armour. **3** handlebar grip (of a bicycle).

درّاعه *darraaɛa* /n pl *-aat*/ armoured cruiser.

درّع *darraɛ* [1] /vt/ to armour, equip with armour. - vn *tadriiɛ*; ava/pva *midarraɛ*.

مدرّعة *mudarraɛa* /n pl *-aat*/ armoured car. *ʃil-mudarraɛaat* the Tank Corps.

اتدرّع *ʃitdarraɛ* [1] or *ʃiddarraɛ* [1] /vi/ to be armoured. - iva *mitdarraɛ*.

د ر ع [2]

ذراع، دراع *diraaɛ* /n pl *-aat, ʃidriɛa, diríɛa, ʃudruɛ*/ **1a** arm, forearm. *ḫuqna fid-diraaɛ* an injection in the arm. || *ʃabu draaɛ* form of reference to a male with a deformed arm. - *da raagil bi-draaɛ-u* that's a man who relies on his own efforts. - *bid-diraaɛ* (1) by dint of great effort. (2) by force. **1b** foreleg (of an animal). **1c** shoulder (of meat). **2a** arm, lever. *diraaɛ sanafoor* arm on a (railway) signal, semaphore arm. **2b** connecting-rod. **3** unit of linear measurement. *diraaɛ baladi* unit of linear measurement equal to 58 centimetres. *diraaɛ miɛmaari* unit of linear measurement equal to 75 centimetres.

دراعة *diraaɛa* = *diraaɛ* 2.

درّع *darraɛ* [2] /vt/ **1** to elbow. *darraɛ-ni f-sidr-i* he elbowed me in the chest. **2** to take the (*diraaɛ*) measurement of. *darraɛ-li l-ʃooḍa di* measure this room for me! — /vi/ **3** to make an obscene gesture with the forearm. **4** to swagger. *yimʃi ydarraɛ fis-sikka tqul-f' famfuun* he swaggers along the road as if he were Samson. - vn *tadriiɛ*; ava/pva *midarraɛ*.

اتدرّع *ʃitdarraɛ* [2] or *ʃiddarraɛ* [2] /vi/ to be measured out by the *diraaɛ*. - iva *mitdarraɛ*.

د ر ع م

درعمى *darɛami* /n * and pl *daraɛma*/ graduate of the Dar el-Ulum (cf. *daar* [3] 2).

د ر غ م

درغم *darɣam* = *darmaɣ*. - vn *darɣama*; ava/pva *midarɣam*.

اتدرغم *ʃitdarɣam* or *ʃiddarɣam* = *ʃitdarmaɣ*. - ava/iva *mitdarɣam*.

د ر ف

درفه *darfa* /n pl *-aat, duraf*/ leaf (of a door, window, screen etc.). || *gaab duraf-ha* he finished it off completely. - also *ḍalfa*.

د ر ف ل [1]

درفل *darfil* <T *tirfil* from It> **1** /vt/ to roll (steel into sheets). **2** /vi/ to pitch, heave, roll. *ʃil-markib bi-tdarfil fil-baḥr il-ɛaali* the ship tosses in the rough sea. - vn *darfala*; ava/pva *midarfil*.

درفلة *darfala* /vn/ || *looḥ darfala [naut]* bilge keel.

اتدرفل *ʃitdarfil* or *ʃiddarfil* /vi/ **1** to be rolled. **2** to pitch, heave, roll. - vn *darfala*; ava/iva *mitdarfil*.

د ر ف ل [2]

درفيل *darfiil* <prob Lat *delphinus*> /n pl *darafiil*/ **1a** dolphin. **1b** big beefy person. **2** roller. **3** mooring post in the seabed.

د ر ف ل -

دارفلفل *darfilfil* <P *dârfilfil*> /n/ long pepper.

د ر ق [1]

درق *daraq'* [1] /coll n/ shield(s).

درقه *daraqa* /unit n, pl *-aat*/ a shield.

د ر ق ( ) [2]

درق *daraq'* [2] /n pl *-aat*/ *[text]* loom frame.

درقى *daraqi, daraqi* /adj/ thyroid. *ʃil-ɣudda d-daraqiyya* the thyroid gland.

د ر ق ا ع

درقاعة *durqaaɛa* /n pl *-aat*/ *[obsol]* floor space between two raised estrades.

د ر ك [1]

درك *dark*↑ /n/ bottom, depth. *ʃid-dark il-ʃasfal min in-naar [Isl]* the depths of hell.

درك *darak, darak* /n pl *-aat*/ *[obsol]* area of watch or patrol, beat. *ɣafiir darak* official watchman.

مدارك *madaarik* /pl n/ mental faculties. *madark-u wasɛa* he is broad-minded.

دارك *daarik* /vt/ to put in order, set right. *daarik il-mawḍuuɛ qabl' ma yiwṣal lil-buliṣ* set the matter right before it reaches the police! - vn *midarka*; ava *midaarik*.

اتدارك *ʃitdaarik* or *ʃiddaarik* = *daarik*. - ava *mitdaarik*.

أدرك *ʃadrak*↑ /vt/ **1** to realize, reach an understanding of. *ʃana ma-ʃadrakt'-ʃ qaṣd-ak* I didn't grasp your meaning. || *lissa ma-yidrik-ʃ* he's still immature. **2** to catch up with. || *ʃadrak-u l-moot* he died. - vn *ʃidraak*; ava *midrik, mudrik*↑.

إدرك ʔidrak↓ /vi/ to reach puberty. *ʔil-bitt idrakit - ma-tnam-fⁱ maʕa xwat-ha ṣ-ṣubyaan* the girl has reached puberty, she shouldn't sleep with her young brothers. - ava *midrik*.
إدراك ʔidraak /n/ consciousness, awareness, understanding. *da lissa ʕayyil ma-ʕanduu-f ʔidraak* he's still too young to understand. *kaanit iṣ-ṣadma ʃdiida ma-baqaa-f ʕandu l-ʔidraak* the shock was (so) great that he lost consciousness.
مدركات *mudrakaat*↑ /pl n/ concepts. *mudrakaat baṣariyya* visual concepts.
استدرك ʔistadrak /vt/ to rectify or redress (s.th.) in good time. *ʔil-ɣalṭa stadraknaa-ha - fii ʔeeh taani* we put the mistake right (before any harm could be done) - what more could be wanted? - vn *ʔistidraak*; ava *mistadrak, mistadrik*; pva *mistadrak*.

د ر ك ²

درك *dirik* <Engl> /n pl *-aat*/ derrick.

د ر ك س –

دركسيون *diriksiyoon* (also *diriksoon*) <Fr *direction*> /n pl *-aat*/ *[auto]* steering-wheel. *diriksiyoon ʕal-yimiin* right-hand drive.

د ر م

see د ر ا م : *diraama, diraami*

د ر م غ

درمغ *darmaɣ* /vt/ **1** to roll (s.o. or s.th.) on the ground. **2** to cover with earth or mud. - vn *darmaɣa*; ava/pva *midarmaɣ*.
اتدرمغ ʔitdarmaɣ or ʔiddarmaɣ /vi/ **1** to roll or be rolled (on the ground). **2** to be covered with earth or mud. - ava/iva *mitdarmiɣ*.

د ر ن

درن *daran* /n/ **1** tuberculosis. **2** /coll/ *[bot]* tuber(s). **3** /pl *ʔadraan*/ dirt, filth.
درنة *darana, darana* /unit n, pl *-aat*/ *[bot]* a tuber.
درّن *darran* /vi/ **1** to become (very) dirty. *huduum-u darranit* his clothes got filthy. **2** to become tuberculous. *fiʃaf il-bani ʔaadam tidarran mis-sull* human lungs may contract tuberculosis. – /vt/ **3** to make dirty. **4** to cause tuberculosis in. **5** to cause to develop (small) swellings. - vn *tadriin*; ava/pva *midarran*.
اتدرّن ʔitdarran or ʔiddarran /vi/ passive of *darran*. - vn *tadarrun*; iva *mitdarran*.

د ر ه م

درهم *darhim* /n pl *daraahim, daraahim*/ **1** *[obsol]* dirhem, measure of weight equal to 3.12 grammes. **2** dirhem, a silver coin. ‖ *ʔid-daraahim maraahim* ≈ money is a remedy.

د ر و ¹

see د ر : *darawa*

د ر و ²

see د ر ی ² : *dirwa*

د ر و ³

see د ر ی ³ : *diraawa, daraawa, midarraawi, midarrawaati*

د ر و خ

دروخ *darwax* **1** /vt/ to cause to feel dizzy or giddy. *ʔil-ɣiliww*ⁱ *bi-ydarwax-ni* heights make me giddy. **2** /vi/ to feel dizzy or giddy. *darwaxit wi-ʔuɤma ʕaleeha* she felt dizzy and fainted. - vn *darwaxa*; ava *midarwax*.
اتدروخ ʔitdarwax or ʔiddarwax /vi/ to feel dizzy or giddy. - ava *mitdarwax*.

د ر و ش

درويش *darwiif* <P *darwesh*> /n pl *darawiif*/ **1** dervish, member of a Sufi order. **2a** godly person. **2b** person not quite right in the head.
دروش *darwiʃ* /vt/ **1** to make (s.o.) pious. **2** to make (s.o.) soft in the head. - vn *darwaʃa*; ava/pva *midarwiʃ*.
اتدروش ʔitdarwiʃ or ʔiddarwiʃ /vi/ **1** to become a member of a Sufi order. **2a** to adopt or affect the manners of a godly person. **2b** to go soft in the head. - ava *mitdarwiʃ*.

د ر ی ¹

دری *diri (a, a)* /vi/ to become aware. *min ɤeer ma yidra* without his realizing. *miʃ ḥa-yidru biyya* they won't realize I'm there. *ʔinta driit bi-lli ḥaṣal* have you heard what happened? ‖ *ma-drit-ʃ* you must have heard (the news I'm about to tell you). - vn *darayaan, diraaya*; ava *daryaan, daari*.
دراية *diraaya* /n pl *-aat*/ know-how, skill.
دريان *daryaan* /adj */ aware, conscious.
أدرى ʔadra¹ /el/ better/best informed. *ʕala kull*ᵃ *ḥaal ʔinta ʔadra* ≈ anyhow, it is up to you since you know (about it) more than others do.
درّى *darra*ʲ /vt/ to inform, notify. - ava *midarri*.
أدرى ʔadra² = *darra*. *ʔeef ʔadraa-ni* ≈ I have no idea (about that). ‖ *wi-min ʔadraa-k yimkin da ṣaḥiiḥ* ≈ who knows? it may be true.

د ر ی ²

دری *dira* /n/ sheltered or hidden place. *ʔiʃ-ʃams*ᵃ *ḥamya - ruuḥi ʔuqʕudi fid-dira* the sun is strong; go and

sit in the shade. ‖*bi-yiftaval fid-dira* he works on the sly. - /prepositionally/ *xallii-k dira l-ħeeṭ* stay in the shelter of the wall.

دروة *dirwa* /n pl *-aat*/ **1** screen, protective wall. *ʕik-kaff' wara dirwa* examination behind a screen. **2** shelter, sheltered place. *ɛamil-li dirwa ʕanaam fiiha* he's made me a refuge to sleep in.

دارى *daara* /vt/ **1** to hide, conceal. *bi-tdaari k-kitaab minni* (or *ɛanni) leeh* why are you hiding the book from me? — /vi/ **2a** to be secretive, keep one's affairs to oneself. *ʕana mif min illi bi-ydaaru* I am not the secretive type. *di ma-b-tiɛraf-ʃ' tdaari* she does not know how to keep things to herself. *ħibb' w-waari wi-krah wi-daari [prov]* ≈ show your love discreetly but hide your hate completely. **2b** to put behind cover, make a screen. *bi-ydaari ɛala ɛeen-u mif-ʃams* he is shielding his eyes from the sun. ‖*daari ɛala ʃamɛit-ak tiqiid [prov]* (shield your candle and it will burn) don't broadcast your plans lest people's knowledge of them jeopardize your success. - vn *midariyya*; ava *midaari*.

¶ *daara ɛala* to cover up for (s.o.). *ʕana ʃuft-ak bi-tisraq wi-dareet ɛaleek* I saw you stealing and covered up for you.

اتدارى *ʕitdaara* or *ʕiddaara* /vi/ to be hidden, hide oneself. *ʕiddaara f-ḍill' ʂubaaɛ-u [prov]* ≈ he wished that the earth would swallow him up. - ava/iva *mitdaari*.

د ر ى [3]

دراوة، ذراوة *daraawa, diraawa* /n/ winnowing. *makanit diraawa* winnowing machine.

مدرى، مذرى، مذراة *midra* /n pl *-aat, midar, madaari*/ **1** winnowing fork. ‖*haati ya midra waddi ya sidra [prov]* (bring, winnowing fork; take, cooking pot) ≈ whatever is earned is quickly used up. **2** punt-pole.

درّى، ذرّى *darra*[2] /vt/ to winnow. *bi-nkawwim-u wi-ndarrii bi-makana* we heap it up and winnow it with a machine. - vn *tadriyya*; ava/pva *midarri*.

مدرّاوى *midarraawi* /n pl *-yya*/ one who winnows.

مدرّواتى *midarrawaati* /n pl *-yya*/ one who winnows.

اتدرّى *ʕitdarra* or *ʕiddarra* /vi/ to be winnowed. - iva *mitdarri*.

د ر ى س

دريسة *diriisa* <poss It *terraziere*> /n/ railway-track maintenance. *ɛaamil* (or *ɛaskari* or *ʁafiir) diriisa* railway-track maintenance worker.

د ز ى ن

دزّينة *duzziina, dazziina* <It *dozzina*> /n pl *-aat, dazaziin*/ dozen. *bid-duzziina* by the dozen, in great quantities. - also *ṭuzziina*.

(د س ت)

دست *dist* <prob P *dastî*> /n pl *dusuut*/ **1** brass pot or cauldron. *ʕilli yuqɛud fil-wisṭ' yikkabb[a] ɛalee ʕid-dist* he who sits in the middle will have the *dist* emptied over him (a children's rhyme). **2** *[metal]* small smelting furnace. **3** *[slang]* sucker. *ʕinta fakir-ni dist* do you take me for a sucker?

دستة *dasta* <P *dasta*> /n pl *-aat, disat*/ **1** dozen. *nuṣṣ' dasta* half a dozen. *bid-dasta* by the dozen. **2** pack (not necessarily containing a dozen). *dastit kabriit* a carton of ten boxes of matches.

د س ت و ر

دستور *dustuur, dastuur*↓ <P *dastûr*> /n pl *dasatiir*/ **1** *[pol]* constitution. *ʕiħna mistanniyyiin id-dustuur id-daaʕim* we're waiting for the permanent constitution. — */dastuur* only/ **2** *[constr]* **2a** course of rough-cut limestone (trimmed on one side). **2b** set of blocks of wood (fixed into a wall) onto which a doorframe is fitted. **3** /no pl/ *[rur]* leave, permission. *min ɤeer ʕiħim wala dastuur* without so much as a by your leave. *dastuur ya syaad-i* by your leave, masters! (a form of address to spirits in *zaar* ceremonies).

دستورى *dustuuri* **1** /adj */ constitutional. **2** /n */ constitutionalist.

دستوريّة *dusturiyya*↑ /n/ constitutionality.

د س ر

دسرة *dusra* /n/ *[metal]* crimping (of metal sheet edges).

د س س

دسّ *dass (i)* **1** /vt/ to insert, insinuate. *dassit il-filuus fid-durg* she put the money inside the drawer. *ʕil-buliiṣ dass[a] ɛaleehum muxbir* the police infiltrated them with a plain-clothes man. *ħ-adiss-i-lu simm' fif-faay* I'll slip poison into his tea. **2** /vi/ to insinuate oneself. *huwwa lli dass' benna* he's the one who came between us. - vn *dass*; ava *daasis*; pva *madsuus*.

دسيسة *dasiisa* /n pl *dasaayis*/ plot, intrigue.

دسّاس *dassaas* /n */ intriguer. ‖*ʕil-ɛirq' dassaas [prov]* ≈ inherited characteristics are ever-present.

اتدسّ *ʕitdass* or *ʕiddass* /vi/ to be inserted, be insinuated. - iva *mitdass*.

اندسّ *ʕindass* = *ʕitdass*. - iva *mindass*.

اتدسّس *ʕitdassis* or *ʕiddassis* /vi/ to infiltrate oneself. - ava *mitdassis*.

د س و ق

دسوق *disuuq, dusuuq* /prop n/ Disuq, a town in the north-west of the Delta, known in particular for the shrine of the Muslim saint Ibrahim ed-Disuqi.

دسوقى *disuuqi, dusuuqi* /adj */ pertaining to the town of Disuq.

الدسوقيّة *ʕid-disuqiyya, ʕid-dusuqiyya* /prop n/ Sufi order founded by Ibrahim ed-Disuqi.

(د س ك)

دسك *disk*[1] <Engl> /n pl *-aat*/ **1** (news) desk. **2** (control) desk (in a recording studio).

دسك *disk*[2] <prob Engl> /n pl *-aat*/ **1** cymbal. **2** semaphore disc. **3** *[path]* (slipped) disc.

دسك *disk*[3] <Fr *disque*> /n pl *-aat*/ gramophone record.

د س م

دسم *dasam* /n/ fat (as an animal product). *gibna kamlit id-dasam* full-cream cheese.

دسم *disim, dasim*↑ /adj/ rich, heavy (particularly of food). *ʔil-ʔakl*[i] *da disim ʕala miʕdit-i* this food is too rich for my stomach. *da mawḍuuʕ dasim yiḥtaag li-tafkiir* that's a rich subject requiring thought.

دسامة *dasaama* /n/ fattiness, greasiness.

استدسم *ʔistadsim* /vt/ **1** to consider fatty or greasy. **2** to select for fattiness, greasiness or richness. - ava *mistadsim*.

د س م ب ر

ديسمبر *disimbir, disimbar* /n/ December.

د س ن ت -

دوسنتاريا *dusintarya* <It *dissenteria*> /n/ *[path]* dysentery.

د س ى ه

دوسيه *duseeh* <Fr *dossier*> /n pl *-aat*/ file, dossier, folder. ‖*lu duseeh wisix ʕandina* he has a bad record with us. - *ma-fii-ʃ daaʕi l-fatḥ*[i] *dusehaat* there's no need to bring things out into the open!

د ش ت

دشت *daʃat (i)* /vt/ to disregard, ignore. *daʃat il-muẓakkira* he paid no attention to the memorandum. - vn *daʃt*; ava *daaʃit*; pva *madʃuut*.

دشت *daʃt* (also *waraq daʃt*) /n/ waste paper, scrap paper.

اتدست *ʔitdaʃat* or *ʔiddaʃat* /vi/ to be disregarded, be ignored. - iva *mitdiʃit*.

اندشت *ʔindaʃat* = *ʔitdaʃat*. - iva *mindiʃit*.

دشّت *daʃʃit* = *daʃat*. - vn *tadʃiit*; ava/pva *midaʃʃit*.

اتدشّت *ʔitdaʃʃit* or *ʔiddaʃʃit* = *ʔitdaʃat*. - iva *mitdaʃʃit*.

د ش د see د ش ى د : *diʃiida, daʃiida*

د ش د ش

دشدش *daʃdiʃ* /vt/ to reduce to fragments, smash, shatter. *ʔiṣ-ṣudaaʕ daʃdiʃ dimaaɣ-i* the headache split my skull. - vn *daʃdaʃa*; ava/pva *midaʃdiʃ*.

اتدشدش *ʔitdaʃdiʃ* or *ʔiddaʃdiʃ* /vi/ to be reduced to fragments, be smashed, be shattered. - iva *mitdaʃdiʃ*.

د ش ش [1]

دشّ *daʃʃ (i)* /vt/ **1** to mash, pound. *daʃʃit id-dura ʕar-raḥaaya* she pounded the maize in the quern. ‖*ʕaaʕid yidiʃʃ*[i] *kalaam faariɣ* he keeps on churning out nonsensical talk. - *yidiʃʃ*[i] *f-fuɣl-u* he slogs away at his work. **2** to smash, shatter. *ḥ-adiʃʃ iṭ-ṭabaʕ ʕala raas-ak* I'll smash the plate on your head! - vn *daʃʃ*; ava *daaʃiʃ*; pva *madʃuuʃ*.

دشيش *diʃiiʃ* /n/ **1** something (specifically grain or beans) which has been mashed or pounded. **2** beads and stones woven onto a net placed around a corpse.

دشيشة *diʃiiʃa* /n/ something mashed, pounded, or broken to pieces.

دشّاش *daʃʃaaʃ* /n */ **1** one who engages in mashing or pounding. **2a** one who slogs at his work profitlessly, hack. **2b** one who engages in prolonged and fruitless chatter, natterer.

مدشّ *midaʃʃ* /n/ **1** any tool or instrument used for mashing or pounding. **2** one who chatters at length.

اتدشّ *ʔitdaʃʃ* or *ʔiddaʃʃ* /vi/ to be mashed, be pounded. - iva *mitdaʃʃ*.

اندشّ *ʔindaʃʃ* = *ʔitdaʃʃ*. - iva *mindaʃʃ*.

دشّش *daʃʃiʃ* /vt/ to mash or pound lightly. - vn *tadʃiiʃ*; ava/pva *midaʃʃiʃ*.

مدشّشة *midaʃʃiʃa* /n pl *-aat*/ bean-mashing machine.

اتدشّش *ʔitdaʃʃiʃ* or *ʔiddaʃʃiʃ* /vi/ to be pounded or mashed lightly. - iva *mitdaʃʃiʃ*.

(د ش ش)[2]

دشّ *duʃʃ*[1] <Fr *douche*> /n/ **1** /pl *ʔadʃaaʃ, diʃaaʃ, duʃuuʃ*/ **1a** shower. *xadt*[i] *duʃʃ*[i] *sariiʕ* I took a quick shower. **1b** douche. **2** /no pl/ scolding. *ʔiddaa-ni duʃʃ*[i] *gaamid* he gave me a sound scolding.

دشّ *duʃʃ*[2] <P *dû-shash*> /n pl *ʔadʃaaʃ*/ double six (in backgammon).

د ش ل ی –
دشليون *difilyoon* /n pl *-aat/ [joc]* a vast number.

د ش م
دوسمة *dufma* /n pl *dufam/ [mil]* bunker. *dufmit madfaɛ* gun emplacement.

د ش ن
دسن *daffin* /vt/ **1** to launch (a ship, an enterprise etc.). *ɦaflit tadfiin* a launching party. **2** to consecrate (a church). - vn *tadfiin*; ava/pva *midaffin*.
تدشين *tadfiin* /n pl *-aat/* **1** launching (of a ship, an enterprise etc.). **2** consecration (of a church).
اتدشن *ʔitdaffin* or *ʔiddaffin* /vi/ **1** to be launched (of a ship, enterprise etc.). **2** to be consecrated (of a church). - iva *mitdaffin*.

د ش ی د
دسيدة *difiida, dafiida* /n pl *dafaayid/* peg on the yoke of plough (see Pl.D, 9).

د ط ط
دوطّة *duṭṭaˀ* <It *dote*> /n pl *-aat/ [Chr]* dowry. - also *dooṭa, dooṭa*.

د ع ب
دعابة *duɛaabaˀ* /n pl *-aat/* joke, amusing story.
داعب *daaɛib* /vt/ **1** to tease, pull (s.o.'s) leg. **2** to fondle, play with. *bi-tdaaɛib ibn-a-ha ṣ-ṣuʏayyar* she is playing with her little son. - vn *midaɛba*; ava *midaaɛib*.
مداعبة *mudaɛba, mudaaɛabaˀ* /n pl *-aat/* caress, affectionate conversation.
اتداعب *ʔitdaaɛib* or *ʔiddaaɛib* /vi/ to exchange caresses, affectionate words etc. - ava *mitdaaɛib*.

د ع ب س
دعبس *daɛbis* /vi/ **1** to grope around (in search of s.th.). *laazim tidaɛbis fi-kullᵃ ɦaaga* you must dig into everything. **2** to become sad or depressed. - vn *daɛbasa*; ava *midaɛbis*.
اتدعبس *ʔitdaɛbis* or *ʔiddaɛbis* /vi/ (impersonal) passive of *daɛbis*. *ʔil-maɦfaẓa mitdaɛbis fiiha* the wallet has been tampered with. - iva *mitdaɛbis*.

د ع ب ل
دعبل *daɛbil* /vt/ **1** to cause to fade or wither. *ʔil-ɛaya daɛbil-ha* illness withered her body. *ʔil-gafaaf daɛbil iz-zarɛ* the drought withered the plants. *ʔil-ɦizn' daɛbil wiff-a-ha* sorrow turned her face wan. **2** to soften (e.g., dough). *daɛblli l-ɛagiina bi-ʃwayyit mayya* soften the dough by adding a little water. – /vi/ **3** to become ill-looking. *baɛd' ma ɦiblit daɛbilit ɢawi* after she became pregnant she looked very poorly. - vn *daɛbala*; ava/pva *midaɛbil*.
اتدعبل *ʔitdaɛbil* or *ʔiddaɛbil* /vi/ **1a** to wither, fade. **1b** to become ill-looking. **2** to become softer (e.g., of dough). **3** passive of *daɛbil*. - ava/iva *mitdaɛbil*.

د ع ر
دعارة *daɛaara, diɛaara* /n/ prostitution. *beet daɛaara* brothel.
داعر *daaɛir* /adj */ ruthless (of a man), sluttish (of a woman).

د ع س
دعس *daɛas (a)* /vi/ **1** to force one's way. *daɛas bi-kitf-u fiz-zaɦma* he shouldered his way into the crowd. **2** to step, stamp. *ʔidɛas ɛala ṣ-ṣurṣaar da ɢabl' ma yigri* step on that cockroach before it gets away! – /vt/ **3** to insert, cram, force (s.th. into s.th.). *daɛas diraaɛ-u fif-faɢɢ* he forced his arm into the crack. **4** *[coarse slang]* to copulate with, stuff. - vn *daɛs*; ava *daaɛis*; pva *madɛuus*.
اتدعس *ʔitdaɛas* or *ʔiddaɛas* /vi/ passive of *daɛas*. - iva *mitdiɛis*.

د ع ق
دعق *daɛaɢ (a)* /vt/ **1** to slam, bang. **2** to do in a hasty haphazard fashion. *law ma-nta-ʃ ɛaarif tiɛmil-ha ʔidɛaɢ-ha w-xalaaṣ* if you don't know how to do it, just do it any old way and get it over with! - vn *daɛɢa*; ava *daaɛiɢ*; pva *madɛuuɢ*.
مدعوق *madɛuuɢ* /n pl *madaɛiiɢ/* damned thing, cursed thing. *siib il-madɛuuɢ da* leave that damned thing alone!
اتدعق *ʔitdaɛaɢ* or *ʔiddaɛaɢ* /vi/ passive of *daɛaɢ*. - iva *mitdiɛiɢ*.
اندعق *ʔindaɛaɢ* = *ʔitdaɛaɢ*. - iva *mindiɛiɢ*.

د ع ك
دعك *daɛak (a)* /vt/ **1** to rub hard, scrub, scour. *ma-tidɛak-ʃ' ɛeen-ak kida w-ʔiid-ak wisxa* don't rub your eye like that when your hand is dirty. *ʔidɛakı l-ɦuduum kuwayyis* rub the clothes hard! **2** to give (s.o.) trouble, harass. *ʔana daɛakt-u daɛka kwayyisa* I gave him a really hard time. *ʔabuu-ya madɛuuk fiʃ-ʃuʏl* my father has a very hard time at work. - vn *daɛk*; ava *daaɛik*; pva *madɛuuk*.
دعكة *daɛka* /n pl *-aat/* **1** /inst n/ a rub, a rubbing. **2** trouble, hardship. ‖*yigi-lhum daɛka* one day they'll

find life isn't so easy (said of those who are carefree).
اتدعك ʔitdaʕak or ʔiddaʕak /vi/ **1** to be rubbed, be scrubbed. **2** to gain experience, become experienced. *ʔiddaʕak fif-fuṛla di kwayyis* he's become expert at this work. *hiyya lli bi-tʕuul wilaad-ha - ʔiddaʕakit fid-dunya kwayyis* she's the one who supports her family - she really knows her way around. - ava/iva *mitdiʕik*.
اندعك *ʔindaʕak* = *ʔitdaʕak*. - ava/iva *mindiʕik*.
دعّك *daʕʕak* = *daʕak*. - vn *tadʕiik*; ava/pva *midaʕʕak*.
تدعيكة *tadʕiika* = *daʕka*.
مدعّكاتى *midaʕʕakaati* /n pl *-yya*/ masseur.
اتدعّك *ʔitdaʕʕak* or *ʔiddaʕʕak* = *ʔitdaʕak*. - ava/iva *mitdaʕʕak*.

د ع ك ش

دعكش *daʕkiʃ* /vi/ to rummage. *baṭṭal tidaʕkiʃ fil-ʔadraag* stop ransacking the drawers! - vn *daʕkaʃa*; ava *midaʕkiʃ*.

د ع م

دعم *daʕm* /n/ support. *ʔid-daʕm is-suʕuudi lil-bilaad il-ʕarabiyya* Saudi support for the Arab countries.
دعامة *diʕaama, duʕaama*ˆ /n pl *-aat*/ support, prop, pillar.
دعّم *daʕʕam*ˆ /vt/ to support, prop up. *bi-ydaʕʕam kalaam-u b-ʔadilla* he supports what he says with evidence. *sanduuq tadʕiim in-naqd* currency reserve fund. - vn *tadʕiim*; ava/pva *midaʕʕam*.
اتدعّم *ʔitdaʕʕam* or *ʔiddaʕʕam* /vi/ to be supported, be propped up. - iva *mitdaʕʕam*.

د ع و

د ع و see د ع ى : *daʕwa*

د ع و ر

دعور *daʕwar* /vt/ to send spinning, send reeling. *xabaṭ-u daʕwar-u fil-ʔarḍ* he hit him and sent him reeling to the ground. - vn *daʕwara*; ava/pva *midaʕwar*.
اتدعور *ʔitdaʕwar* or *ʔiddaʕwar* /vi/ to reel back (from a blow). *xad il-buks' wi-ddaʕwar fil-ʔarḍ* he received the blow and fell reeling to the ground. - ava *mitdaʕwar*.

د ع ى

دعا *daʕa'* *(i)* /vt/ **1** to pray to, invoke. *bi-yidʕi (l-) rabb-i-na* he prays to God. **2** to invite. *daʕuu-ni ʕal-ʕaʃa* they invited me to dinner. *fi-farḥ-u-hum mansiyyiin wi-f-hamm-u-hum madʕiyyiin* (we're) forgotten at their feasts, but invited for their troubles. - vn *duʕa, daʕa, daʕw*; ava *daaʕi*; pva *madʕi*.
¶ *daʕa (rabb-i-na) li-* to pray for, invoke blessings upon (s.o.), as in *ʔumm-i b-tidʕii-li ʕaʃaan ʔangaḥ fil-imtiḥaan* my mother is praying for me to pass my exam. *- daʕa (rabb-i-na) ʕala* to curse, invoke curses upon.
يدعى *yudʕaˆ* /vi/ to be called, be named. *ṣaḥib-na ḥseen dayman yudʕa siḥs* our friend Hussein is always called *siḥs*.
دعا، دعاء *duʕa* /n pl *ʔadʕiyaˆ*/ prayer, invocation (of God's blessing).
دعا *daʕa*[2] /n/ invocation (of God's wrath).
داعى *daaʕi* /n/ **1** /pl *dawaaʕi*/ motive, incentive. *ʔeeh id-daaʕi ʔinnak ʕamalt' kida* what made you do that? *bi-yiʃraḥ id-dawaaʕi wil-ʔasbaab* he explains the motives and reasons (behind s.th.). ‖*ma-fii-ʃ daaʕi* there's no call, there's no need, as in *ma-fii-ʃ daaʕi lik-kalaam da* there's no call to talk that way. **2** /pl *-yiin*/ inviter, host.
مدعى *madʕi* /n pl *madaaʕi*/ invitee, guest.
المدعو *ʔil-madʕu* /n/ *[leg]* the one whose name is (a term used by process servers). *saʔalna l-madʕu ʕali* we questioned the one whose name is Ali.
دعوة *daʕwa'* /n pl *-aat*/ **1a** prayer, invocation. ‖*daʕwit-u ma-tinzil-ʃ il-ʔarḍ* he is a pious man. **1b** imprecation, curse. **2** invitation. *tazkarit daʕwa* invitation card.
دعوى *daʕwa*[2] /n pl *daʕaawi*/ **1** lawsuit. *rafaʕ daʕwa ʕalayya* he brought a suit against me. ‖*ma-luu-ʃ (ma-lhaa-ʃ* etc.) *daʕwa ʔ(bi-)* he (she etc.) has no right to interfere (in), as in *ma-lak-ʃ' daʕwa biyya* you have nothing to do with me, my affairs are none of your business. **2** proselytization.
أدعى *ʔaḍʕa* /el/ more/most conducive.
دعاية *diʕaaya* /n pl *-aat*/ publicity, propaganda. *kull' ṭaalib bi-yiʕmil diʕaaya l-nafs-u* each student campaigns for himself.
اتدعى *ʔitdaʕa* or *ʔiddaʕa'* /vi/ **1** to be invited. **2** to be invoked (of a blessing or curse). *yaama ddaʕit-lu daʕawaat min waldee* he received numerous blessings through the prayers of his parents. - /impersonally/ *min ʔaʕmaal-u s-sayyiʔa ddaʕa ʕalee kitiir* everyone cursed him for his bad behaviour. - iva *mitdiʕi*.
اندعى *ʔindaʕa* = *ʔitdaʕa*. - iva *mindiʕi*.
مدعّى *midaʕʕi* /n */ one who directs the prayers of pilgrims at Mecca.
تداعى *tadaaʕiˆ* /n/ correlation, association. *ʔit-tadaaʕi l-ḥurr* (or *l-muṭlaq*) free association.
متداعى *mutadaaʕiˆ* /ądj/ dilapidated, on the point of collapse.
ادّعى *ʔiddaʕa* /vt/ **1** to claim, assert. *dayman bi-tiddiʕi k-karam* she always claims to be generous. *ʔiddaʕa ʔinnu duktuur* he claimed to be a doctor. **2** to pray to God (for s.o.), invoke the blessings of God (upon s.o.).

kull-i-na b-niddiʕii-lu (rabb-i-na) yirgaʕ bis-salaama we all pray for him to come back safe. — /vi/ **3** to bring a lawsuit (against s.o.). *ḥ-addaʕi ʕaʃ-ʃirka bil-ḥaqq il-madani* I'll sue the company for compensation. - vn *ʔiddiʕaaʔ*; ava *muddaʕi, middiʕi*; pva *muddaʕa*.

مدّعى *muddaʕi*↑ /n */ *[leg]* plaintiff, prosecutor. *ʔil-muddaʕi l-ʕaamm* the public prosecutor. ‖ *ʔil-muddaʕi l-ʕaamm il-iʃtiraaki* government official with Cabinet rank charged with prosecuting crimes involving exploitation of the people.

مدّعى *muddaʕa: muddaʕa ʕalee [leg]* defendant.

استدعى *ʔistadʕa (yistadʕi)* /vt/ **1** to summon. *ʔil-maḥkama b-tistadʕi-f-fuhuud* the court summons the witnesses. - /the literary passive form frequently occurs/ *ʈiliʕ ridiif wi-yustadʕa f-ḥaalit iṭ-ṭawaariʔ* he's become a reservist and will be called up in case of emergency. **2** to require, demand, necessitate. *da ma-yistadʕii-ʃ kull id-dawʃa di* that's not worth all this commotion. - vn *ʔistidʕaaʔ*; ava *mistadʕi*.

د غ د غ

دغدغ *daɣdaɣ, daɣdaɣ* /vt/ **1** to batter. *ḥ-adaɣdaɣ-u min iḍ-ḍarb* I'll beat the daylights out of him. **2** to crunch (with the teeth). *miʃ kalit il-ḥamaama bass - di daɣdaɣit il-ʕaḍm' kamaan* she not only ate the pigeon, she crunched up the bones as well. - vn *daɣdaɣa*; ava/pva *midaɣdaɣ*.

اتدغدغ *ʔitdaɣdaɣ* or *ʔiddaɣdaɣ* /vi/ **1** to be battered. **2** to be crunched. - iva *mitdaɣdaɣ*.

د غ ر

دغر *daɣar (u)* **1** /vt/ to force, cram, thrust (s.th. into s.th.). *daɣarit ṣubaʕ-ha f-ḥanak il-ʕayyil ʕaʃaan tiṭallaʕ il-xaraza* she forced her finger into the child's mouth to get out the bead. **2** /vi/ to burst in (on s.o.), rush (upon s.o.). *miraat-u daɣarit ʕalee huwwa w-ʕaʃiqt-u* his wife burst in on him and his mistress. - ava *daaɣir*.

د غ ر ی

دوغری *duɣri* <T *doğru*> /adv/ **1** immediately, right away. *ʈarad-ni duɣri* he threw me out right away. **2** straight on. *xallii-k maaʃi duɣri l-ɣaayit ma tiwṣal* walk straight on till you get there. **3** in a straightforward fashion. *ʔana ʈuul ʕumr-i maaʃi duɣri* all my life I've behaved properly. - /adj invar/ **4** straightforward, sincere. *raagil duɣri* a straightforward man, an undesigning man. *ʔana ṣariiḥ maʕaak wi-duɣri* I'm being frank and open with you. **5** straight. *misallaat duɣri* straight darning-needles.

د غ ش

دغشة *daɣʃa*↑ /n/ dusk. *fi-daɣʃit il-miṣa* at dusk.

دغّيشة *duɣɣeeʃa* /n/ dusk. *gum fi-duɣɣeeʃit il-maɣribiyya* they came at dusk.

دغّش *daɣɣaʃ* **1** /vt/ to blur, bedim. **2** /vi/ to become dim or blurred. - also *daɣʃiʃ*. - vn *taḍɣiiʃ*; ava/pva *midaɣɣaʃ*.

د غ ش ش

دغشّش *daɣʃiʃ* **1** /vt/ to blur, bedim. *ʔin-nada daɣʃiʃ il-barabriiz* the dew blurred the windscreen. **2** /vi/ to become dim or blurred. *naẓar-u mdaɣʃiʃ* his sight has dimmed. - also *daɣɣaʃ*. - vn *daɣʃaʃa*; ava/pva *midaɣʃiʃ*.

دغشيشة *duɣʃeeʃa* /n pl *-aat, daɣaʃiif*/ dusk. *gaa-ni f-duɣʃeeʃit il-maɣribiyya* he came for me at dusk.

اتدغسس *ʔitdaɣʃiʃ* or *ʔiddaɣʃiʃ* /vi/ to become dim or blurred. - ava *mitdaɣʃiʃ*.

د غ غ

دغ *daɣɣ (u)* /vt/ to break into fragments, smash, shatter. *daɣɣ il-ʕizaaz* he smashed the windowpane. ‖ *daɣɣ-u ʕalʕa* he gave him a good beating. - vn *daɣɣ, daɣaɣaan*; ava *daaɣiɣ*; pva *madɣuuɣ*.

اتدغّ *ʔitdaɣɣ* or *ʔiddaɣɣ* /vi/ to be smashed, be shattered. - iva *mitdaɣɣ*.

د غ ف ف

دغفّ *duɣuff* /n pl *-aat*/ oaf, dolt.

د غ م

دغم *daɣam (i)* /vt/ **1** to incorporate, combine. *ʔidɣim il-mawḍuʕeen fi-maqaala waḥda* combine both topics in a single article. **2** *[gram]* to assimilate, contract (a sound). **3** to jumble, run together. *bi-yidɣim kalaam-u f-baʕḍ* he runs his words together. *ʔafkaar-u madɣuuma* his thoughts are muddled. - vn *daɣm*; ava *daaɣim*; pva *madɣuum*.

ادغم *ʔitdaɣam* or *ʔiddaɣam* /vi/ **1** to be incorporated. **2** *[gram]* to be assimilated. **3** to be jumbled. - iva *mitdiɣim*.

اندغم *ʔindaɣam* = *ʔitdaɣam*. - iva *mindiɣim*.

أدغم *ʔadɣam*↑ /vt/ *[gram]* to assimilate. - vn *ʔidɣaam*; pva *madɣam*.

د غ م س

دغمس *daɣmis* /vt/ **1** to dim. **2** *[coarse]* to copulate with, lay. — /vi/ **3** to grow dim. **4** to become glum, feel at a low ebb. **5** to get up to no good. - vn *daɣmasa*; ava *midaɣmis*.

اتدغمس *ʔitdaɣmis* or *ʔiddaɣmis* /vi/ passive of *daɣmis* 1. - iva *mitdaɣmis*.

د غ ن

دغن *daɣan (i)* /vt/ *[slang]* to stuff (s.o., especially with food). - vn *daɣn*; ava *daaɣin*; pva *madɣuun*.

دغنة *daɣna* /n pl *-aat*/ instance noun of *daɣn*. *ḥittit daɣna* a great feed.

اندغن *ʔindaɣan* /vi/ to stuffed (especially with food). - iva *mindiɣin*.

د غ و ش

دغوش *daɣwiʃ* **1** /vt/ **1a** to dim. *daɣwiʃ il-lamba* turn down the lamp. **1b** to blur (the vision). *ʔil-qaṭra daɣwiʃit ɛeen-i* the eye-drops blurred my vision. **2** /vi/ to grow dim. - vn *daɣwaʃa*; ava/pva *midaɣwiʃ*.

دغوشة *daɣwaʃa* /n/ dimness, blurred-ness.

دغويشة *duɣweeʃa* /n/ dusk.

اتدغوش *ʔitdaɣwiʃ* or *ʔiddaɣwiʃ* /vi/ passive of *daɣwiʃ*. - iva *mitdaɣwiʃ*.

د ف ء see د ف ي

د ف ت ر

دفتر *daftar* /n pl *dafaatir*/ **1** ruled note-book, exercise book, ledger, register. *daftar mabiɛaat* sales ledger. *daftar ḥuḍuur* signing-in book. *daftar gard* inventory record book. *daftar murattabaat* pay-roll. *daftar ʃikaat* cheque book. *daftar tilifoon* telephone directory. ‖ *daftar il-ʔustaaz* the master ledger. - *daftar ṣanf* record book kept on the turnover of specific articles. - *daftar yomiyya ʔamrikaani* daily account book with pages stamped and registered. - *daftar bafra* packet of cigarette papers. - *ɛaql-u daftar* ≈ he has a sharp memory. **2** pamphlet, leaflet. *daftar it-taɛliim* instruction booklet.

دفتردار *diftirdaar* /n/ *[obsol]* former title of the Minister of Finance.

دفترخانة *daftarxaana* /n pl *-aat*/ archive.

د ف ت ر ي

دفتيريا *diftirya* <Engl> /n/ diphtheria.

د ف ت ي ر see د ف ي ت - : *divateer*

د ف د ف

دفدف *dafdif* /vi/ **1** to flutter, flap, palpitate. **2** to be (over-)anxious, be (too) eager. - vn *dafdafa*; ava *midafdif*.

اتدفدف *ʔitdafdif* or *ʔiddafdif* = *dafdif*. - ava *mitdafdif*.

(د ف ر)

دفر *dafar* /n/ inflammation of the eyes (in cattle).

دفرة *difra* /n pl *-aat, difar*/ wire modelling-tool used for working clay or wax.

د ف ر ن -

دفرنسيل *difransil* <Fr> /n/ *[auto]* differential gear.

د ف س

دفس *dafas (i)* /vt/ **1** to stuff, cram. *dafast*^{i} *nafs-i f-zaḥmit il-ʔutubiis* I forced myself into the crowd on the bus. *ʔil-huduum madfuusa fif-fanṭa* the clothes are crammed into the suitcase. ‖ *ʔinta dayman bi-tidfis manaxiir-ak* (or *buuz-ak) fi-kull*^{a} *ḥaaga* you're always sticking your nose into everything. - *ḥ-adfis raas-ak fiṭ-ṭiin* ≈ I'll murder you! **2** to tuck away, put right inside. *dafas maḥfaẓt-i f-geeb-u* he tucked my wallet away in his pocket. *dafas (nafs-u) taḥt il-liḥaaf* he burrowed under the quilt. ‖ *dafas iṭ-ṭabaq kull-u f-kirf-u* he knocked back the whole meal. - vn *dafs, dafasaan*; ava *daafis*; pva *madfuus*.

مدفوس *madfuus* /n/ dish of pigeons baked with rice and milk.

اتدفس *ʔitdafas* or *ʔiddafas* /vi/ **1** to be forced, be crammed (into s.th.). **2** to force oneself (into, e.g., a crowd). *ʔiddafast*^{i} *fiz-zaḥma* I forced myself into the crowd. - ava/iva *mitdifis*.

اندفس *ʔindafas* = *ʔitdafas*. - ava/iva *mindifis*.

دفّس *daffis* = *dafas*. - vn *tadfiis*; ava/pva *midaffis*.

مدفّس *midaffis* /adj/ firm, compact.

اتدفّس *ʔitdaffis* or *ʔiddaffis* = *ʔitdafas*. - ava/iva *mitdaffis*.

د ف ع

دفع *dafaɛ (a)* /vt/ **1** to pay (a sum) for (s.th.). *dafaɛt*^{i} *ʔitneen gineeh banziin* I paid two pounds for petrol. *ḥa-yidfaɛ il-ɛilaag* he'll pay for the treatment. *ma-dafaɛuu-ʃ il-ʔugra* they didn't pay the fare. *dafaɛt*^{i} *fiiha ʔalf*^{i} *gneeh* I paid a thousand pounds for it. **2** *[mech]* to push, drive. *ʔil-mayya b-tidfaɛ sadlit il-balf*^{i} *fi-ttigaah waaḥid* the water pushes the valve flap in one direction. *ɢuwwit id-dafɛ* momentum. **3** to repel, drive away. *ma-ḥadd*^{i}*-ʃ yiqdar yidfaɛ il-ɢaḍa* no one can avoid his fate. ‖ *ʔidfaɛ bi-llati hiyya ʔaḥsan* overcome evil with good. — /vi/ **4** to protest. *ʔil-muḥaami dafaɛ bi-ɛadam ixtiṣaaṣ il-maḥkama* the lawyer protested the court's lack of jurisdiction. - vn *dafɛ*; ava *daafiɛ*; pva *madfuuɛ*.

دفع *dafɛ* /n pl *dufuuɛ*/ *[leg]* protest.

دفعة *dafɛa* /n/ **1** /no pl/ forceful impetus, thrust, drive. ‖ *raagil ɛandu dafɛa* (1) a very energetic man. (2) a

hot-tempered man. **2** /pl *-aat*/ payment.

دافع *daafiɛ* [1] /n pl *dawaafiɛ*/ incentive, motive.

دفعة *dufɛa* /n/ **1** / pl *-aat, dufaɛ*/ batch, part of a larger quantity. *dufɛa mın il-biḍaaɛa* one batch of the goods. *ʕitxarragt' maɛaa fi-dufɛit tamanya w-sittiin* I graduated with him in the class of '68. *dufɛit raṣṣaaf* burst of machine-gun fire. *ʕid-damm' b-yinzil dufɛaat wara baɛḍ* the blood is flowing in spurts. ‖*dufɛa waḥda* all at once, in one lot. **2** /inst n, pl *-aat*/ (single) payment. **3** /pl *dufaɛ*/ nickname for a private in the army.

مدفع *madfaɛ* /n pl *madaafiɛ*/ **1** cannon, gun. *madfaɛ raṣṣaaf* machine-gun. ‖*fi-wıff il-madfaɛ* in the line of fire (for criticism etc.). - *madfaɛ is-suḥuur* Ramadan cannon awakening people for the nocturnal meal. - *madfaɛ il-ʕimsaak* Ramadan cannon signalling the time for ending the nocturnal meal. - *madfaɛ ir-rafɛ* Ramadan cannon signalling the beginning of the fast. - *madfaɛ ıl-fiṭaar* Ramadan cannon signalling the end of the fast. - *ḍarab madfaɛ* to fart, let rip. - *ʕil-ɛarabiyya b-tiɛmil madaafiɛ* the car backfires. **2** butane torch (for welding). **3** bolster-shaped cushion (for a sofa etc.). **4** folk preparation eaten by men to enhance sexual powers. *laḥas-lu madfaɛeen* he took two doses of aphrodisiac.

مدفعيّة *madfaɛiyya* /n/ artillery. *madfaɛiyya mḍaadda lıṭ-ṭayyaraat* anti-aircraft artillery. *sılaaḥ ıl-madfaɛiyya* the Artillery Corps.

مدفعجى *madfaɛgi* /n pl *-yya*/ gunner.

اتدفع *ʕitdafaɛ* or *ʕiddafaɛ* = *ʕindafaɛ* 1 and 2.

اندفع *ʕindafaɛ* /vi/ **1** to be paid. **2** *[mech]* to be pushed, be driven, have momentum. **3** to act impulsively. - vn *ʕındifaaɛ*; ava/iva *mindifiɛ, mundafiɛ* [↑].

اندفاع *ʕındifaaɛ* [↑] /n pl *-aat*/ **1** outburst, outbreak. **2** rashness, impetuosity.

اندفاعه *ʕındifaaɛa* /inst n, pl *-aat*/ a sudden outburst.

اندفاعى *ʕındıfaaɛi* [↑] /adj */ impulsive.

مندفع *mundafiɛ* /adj */ rash, impetuous, imprudent.

دافع *daafiɛ* [2] /vi/ to put up a defence. *laazim nidaafiɛ ɛan nafs-ı-na* we must defend ourselves. - vn *midafɛa, dıfaaɛ*; ava *midaafiɛ*.

دفاع *dıfaaɛ* /n pl *-aat*/ defence. *difaɛaat ḥawaleen il-mawqiɛ* defences around the position. *ʕid-difaaɛ il-madanı* civil defence.

دفاعى *dıfaaɛı* /adj/ defensive. *ʕiṭ-ṭuruq ıd-dıfaɛiyya* defensive tactics

اتدافع *ʕitdaafiɛ* or *ʕiddaafiɛ* /vi/ **1** (impersonal) passive of *daafiɛ* [2]. *ʕiṭ-ṭaraf laazım yitdaafiɛ ɛannu* one's honour should be defended. **2** to push one another. *nızilna nıtdaafiɛ mıl-ʕutubıs* we pushed each other out of the bus. - vn *tadaafuɛ* [↑]; ava/iva *mıtdaafiɛ*.

د ف ف [1]

دفّ *daff* [1] *(i)* /vt/ to remove, throw aside. *diff-u bɛiid* take it right away! - vn *daff, dafafaan*; ava *daafif*; pva *madfuuf*.

اتدفّ *ʕitdaff* or *ʕiddaff* /vi/ to be removed, be thrown aside. - iva *mitdaff*.

اندفّ *ʕindaff* = *ʕitdaff*. - iva *mindaff*.

د ف ف [2]

دفّ *daff* [2], *duff* /n pl *dufuuf*/ tambourine, larger than the *riqq*, with a small wooden edge around the head, so it can be twirled around the player's finger.

دفّ *daff* [3] /n/ *[Chr]* small cymbals used to accompany liturgical singing.

دفّة *daffa* [1] /n pl *-aat, difaf*/ helm, rudder and tiller. *ɛamuud daffa* rudder stock. ‖*dawwar id-daffa* to change the subject. - *ʕinta ɋalabt id-daffa ɛalayya* now you're turning against me! - *min id-daffa lif-fabuura* ≈ one and all, without exception.

د ف ق

دفق *dafaq (u)* **1** /vt/ to pour out. *ɛala mahl-ak ma-tudfuq-ʃ ıl-mayya kida* go easy, don't pour the water out that way! **2** /vi/ to gush, spurt. *ʕid-damm' dafaq min zoor-u* the blood gushed out of his mouth. - vn *dafq, dafaqaan*; ava *daafiq*; pva *madfuuq*.

اتدفق *ʕitdafaq* or *iddafaq* /vi/ to be poured out. - iva *mitdifiq*.

اندفق *ʕindafaq* = *ʕitdafaq*. - iva *mindıfiq*.

دفّق *daffaq* **1** /vt/ **1a** to cause to gush or spurt. **1b** to pour repeatedly. **2** /vi/ to gush or spurt repeatedly. - vn *tadfiiq*; ava/pva *midaffaq*.

اتدفّق *ʕitdaffaq* or *ʕiddaffaq* /vi/ to pour forth, gush forth. *ʕil-mayya b-tıddaffaq mıl-ḥanafiyya* water is pouring out of the tap. - ava *mıtdaffaq*.

د ف ن

دفن *dafan (i)* /vt/ to bury, entomb. *dafannaa wi-xadna l-xaaṭir* we buried him and paid our condolences. ‖*dafnin-u sawa* ≈ (don't give me that,) we both know the real story. - *maḥbas dafn* a tap/ faucet all of whose adjoining pipes are concealed in the wall. - vn *dafn*; ava *daafin*; pva *madfuun*.

دفنه *dafna* /inst n, pl *-aat*/ a burial. *ḥaḍart ıd-dafna ʕimbaariḥ* I attended the burial yesterday. *ɛilaag ir-rumatizm' bıd-dafna fır-raml* treating rheumatism by burying the patient up to his neck in sand.

دفّان *daffaan* /n/ horned viper.

مدفن *madfan* /n pl *madaafin*/ **1** cemetery. **2** tomb.

اتدفن ʔitdafan or ʔiddafan /vi/ to be buried, be entombed. - iva *mitdifin*.
اندفن ʔindafan = ʔitdafan. ‖ *ʔindafan bil-ḥaya* his life turned out badly for him. - iva *mindifin*.
دفّن daffin **1** /vt/ to bury, conceal (with effort). **2** /vi/ to harbour resentment, store up ill will. *ʕaʕad yidaffin-lu l-ḥadd[i] ma xad bi-taar-u* he went on harbouring resentment against him until he got his revenge. - vn *tadfiin*; ava/pva *midaffin*.

د ف ن ا ر

دفنار *difnaar* /n/ *[Chr]* book of the lives of saints written in verse and sung on saints' days in the morning service.

د ف و ه

دفوه *difooh* <Fr *défaut*> /n pl *-aat*/ defect.

د ف ي

دفى *difi (a)* /vi/ **1** to become warm, warm up. *riglee difyit* his feet warmed up. **2** to acquire money, become wealthy. - vn *dafa, dafayaan*.
دفء *dafa* /n/ warmth, cosiness. *taʕaala ʔuqʕud fid-dafa* come and sit in the warm! *ʔid-dafa ʕafa wil-bard[i] laḥḥaas il-qafa [prov]* ≈ how nice it is to be cosy when it's cold outside.
دفيان *dafyaan* /adj */ **1** warm (of people and animals). **2** well-off, loaded (with money).
دافى *daafi* /adj/ warm. *ʔin-nahar-da daafi* its warm today. ‖ *gism-u daafi* he has a (slight) temperature.
دفّاية *daffaaya* /n pl *-aat*/ heater, any device (such as a brazier, fireplace etc.) the purpose of which is the provision of heat.
دفّية *diffiyya* /n pl *dafaafi, diffiyyaat*/ *[rur]* woollen cloak.
دفّى *daffa[2]* /vt/ to warm, heat. *ma-ʕanduhum-ʃ[i] huduum tidaffii-hum* they don't have clothes to keep them warm. ‖ *daffa geeb-u* to acquire money, as in *qabl[i] ma titgawwiz laazim tidaffi geeb-ak* before you marry you should have some money. - vn *tadfiyya*; ava/pva *midaffi*.
اتدفّى ʔitdaffa or ʔiddaffa /vi/ to become warm. *ʔiṭ-ṭifl iddaffa taḥt il-liḥaaf* the child got warm under the quilt. - ava *mitdaffi*.
استدفا، استدفى ʔistadfa /vt/ **1** to consider warm. *bi-tistadfa l-qaʕda hina ʕan hinaak* she feels warmer sitting here than there. **2a** to select for warmth. **2b** to select for wealth. *ʔistadfit ṣaaḥib ʔaṭyaan wi-ggawwizit-u* she chose a rich landowner and married him. - ava *mistadfi*.

د ف ي ت

دفيتير *divyateer* (also *divateer*) <Fr *déviateur*> /n/ *[elec]* double two-way switch circuit.

د ق د ق [1]

دقدق *daqdaq* /vt/ **1** to crush, grind by pounding. **2** to nail. **3** to make (s.o.) worldly-wise (of life). *xalli z-zaman yidaqdaq-u ʃwayya* let life teach him a thing or two. — /vi/ **4** to rap, bang. - vn *daqdaqa*; ava/pva *midaqdaq*.
اتدقدق ʔitdaqdaq or ʔiddaqdaq /vi/ passive of *daqdaq*. - iva *mitdaqdaq*.

د ق د ق [2]

دقدق *duqduq* /n pl *daqaadiq*/ *[trad soc, obsol]* form of address or reference to a small child ≈ tiny one.

د ق ر

دقر *daqar (u)* **1** /vt/ to wedge, jam. *ʔudqur il-xaʃaba fii* wedge the piece of wood into it. **2** /vi/ to become wedged or jammed. *ʔil-muxṭaaf daaqir* the anchor is stuck. - vn *daqr*; ava *daaqir, daaqir*; pva *madquur*.
¶ *daqar fi-* (1) to persist stubbornly in. (2) to interfere in.
دقر *diqir* /adj */ **1** persistent, obstinate. **2** interfering, nosey.
دقار *duqaar* /n pl *-aat*/ peg, prop, stake (firmly fixed as a support).
دقّر *daqqar* **1** /vt/ to lean, press, prop, wedge. *daqqaru kutal xaʃab fis-suur il-maayil ʕafaan yisnidu* they pressed blocks of wood against the sagging fence to prop it up. **2** /vi/ to rub or press one's body (up against s.o.) for sexual satisfaction. *huwwa bi-yḥibb[i] yirkab fil-ʔutubisaat iz-zaḥma ʕafaan yidaqqar fis-sittaat* (or *lis-sittaat*) he likes to ride in crowded buses so that he can rub up against the women. - vn *tadqiir*; ava *midaqqar*.
¶ *daqqar (raas-u) fi-* to persist in.
مدقّراتى *midaqqaraati* /n pl *-yya*/ frotteur, one who rubs up against women in crowds for sexual satisfaction.
اتدقّر ʔitdaqqar or ʔiddaqqar /vi/ to intervene, interfere. ‖ *qul-lu ybaṭṭal yitdaqqar fi-lli ma-luu-ʃ fii* ≈ tell him to mind his own business! - ava *mitdaqqar*.
داقر *daaqir* /vi/ to persist (unsuccessfully), be tenacious. *leeh tidaaqir fi-lli ma-tiqdar-ʃ[i] ʕalee* why persist in doing what you're incapable of? - vn *midaqra*; ava *midaaqir*.
اتداقر ʔitdaaqir or ʔiddaaqir = ʔitdaqqar. - ava *mitdaaqir*.

د ق ش م
دقشم *duqʃum* /n pl *daqaaʃim*/ goldsmith's weight.

د ق ش و م
دقشوم *daqʃuum* /coll n/ crushed limestone (used in cement mix), packing stone.
دقشومة *daqʃuuma* /n pl *-aat*/ cudgel.

د ق ق
دق *daqq (u)* /vt/ **1a** to pound. *qult' lig-gazzaar yiduqq-i-li l-laḥma* I told the butcher to pound the meat for me. ‖*daqq il-hamm' w-naxal-u* ≈ he lived in constant misery. - *daqqeet-u ʕalqa suxna* I gave him a good thrashing. **1b** to hammer in, drive in. *kull' ʕaʃart imtaar ḥa-nduqq[a] ʕalaama fil-ʃarḍ* we'll drive a marker into the ground every ten metres. ‖*maṭraḥ ma tirsi duqq-i-lha [prov]* (wherever your ship comes to rest, drop anchor) ≈ let fate carry you along. **2** to nail. *ʃig-gazmagi daqq-i-li k-kaʕb' b-xamsa saar* the cobbler nailed the heel for me for five piastres. **3** to bang on, knock on, sound. *ʃilli ʕaayiz yixuʃʃ' yduqq il-baab il-ʃawwil* anyone who wants to come in should knock on the door first. *raaḥ daaqiq ig-garas qabl il-ḥiṣṣa ma tintihi* he rang the bell before the class was over. ‖*ʃaxuu-ya daqq-i-li tilifoon ʃimbaariḥ* my brother called me by phone yesterday. - *daqqit-lu tilixraaf* she sent him a cable. - *ʕamalna-lhum daqq' fils* ≈ we picked them up by the arms and legs and banged their behinds together. - *ya dahya duqqi* oh no! now we're in for it! - *daqq' daqqa* to pull a fast one. - *ḥa-nduqq' daqqa farayḥi* we'll strike up a happy tune. **4** to tattoo (a design). *niduqq' wi-nṭaahir wi-nfuuf il-baxt* (gypsy street-call) we tattoo, do circumcisions and tell fortunes! ‖*daqq iṣ-ṣaliib [Chr]* tattooing of the cross (on the inner side of the wrist - a Coptic custom). - *da daaqiq iṣ-ṣaliib [derog]* (said by one Muslim of another) he's ruthless, he's without mercy. - *bitaaʕ id-daqq* tattooist. - *huwwa-na daaqiq ʕaṣafiir* ≈ do you think I'm simple? **5** to stipple (paint). — /vi/ **6a** to beat, pound, hammer. *ʃig-giraan bi-yduqqu ʕal-ḥeeṭa* the neighbours are banging on the wall. *maʃyiin fiʃ-ʃaariʕ yiduqqu ʕala d-dufuuf* they're walking in the street beating on tambourines. **6b** to beat, sound. *ma-smiʕt'-ʃ il-baab bi-yduqq* didn't you hear a knock at the door? *kaan qalb-i bi-yduqq' gaamid* my heart was pounding. *ʃit-tilifoon daqq* the phone rang. *ʃis-saaʕa daqqit tamanya* the clock struck eight. ‖*duqqi ya mazziika* (1) (said to a band) play up! (2) hurrah! - *yaama daqqit ʕala r-raas ṭubuul [prov]* ≈ I've seen it all. **7** to take hold, become established. *nirwi ʃ-ʃatlaat ʕaʃaan tiduqq' fil-ʃarḍ* we water the seedlings so that they may take root in the ground. *xinaaqa kbiira qawi daqqit* a huge quarrel broke out. ‖*daqq' fiyya* he came and started a quarrel with me. **8** to fuss or fret over details or trivial things. *ʃilli yduqq' yitʕab [prov]* worrying over little things just wears you out. *ma-tduqq'-ʃ* don't make a fuss (over it). *ḥa-tduqq[a] ʕala kalaam in-naas* are you going to fret over what people say? ‖*daqqeet ʕalee ma-yinsaa-ʃ miʕad-na* I stressed to him that he must not forget our appointment. - vn *daqq, daqqa, daqaqaan*; ava *daaqiq*; pva *madquuq*.

دقّة *daqqa* /n/ **1** /inst n, pl *-aat*/ a (single) beat, blow, knock. *daqqaat il-qalb* heartbeats. *raqaṣit ʕala daqqaat iṭ-ṭubuul* she danced to the beats of the drums. ‖*daqqa b-daqqa* blow for blow, tit for tat. **2** specific rhythm (determined by the melody in question) to which a patient dances in the *zaar*. ‖*di daqqa w-di daqqa* (that is one beat and this is another) this case is different from the previous one. - *bi-timʃi ʕala daqqa w-nuṣṣ* she sways her hips when she walks. - *di baqit daqqa qadiima* that's old-fashioned. **3** condiment of hot red pepper, oil, vinegar, salt and water used to season *fuul* or *kuʃari*.
دقّة *duqqa* /n/ condiment consisting of salt and pounded spices (usually cumin, coriander and sesame). ‖*faqiir duqqa* very poor.

دقّة *diqqa, diqqa↑* /n/ precision, accuracy. *bi-diqqa* accurately. ‖*diqqit naẓar* insight, perception.

دقّي *diqqi* /adj */ precise, accurate. *kaan diqqi f-fuṿl-u* he was accurate in his work. ‖*naggaar diqqi* a joiner.

دقّيّة *diqqiyya* /n/ **1** /no pl/ exactness. **2** /pl *daqaaqi*/ small cooking-pot.

أدقّ *ʃadaqq* /el/ more/most accurate, or precise.

دقاق *duqaaq* /n/ powder. *duqaaq it-tirmis* lupin flour.

دقيق *daqiiq* /adj */ **1** accurate, precise. *ʃalaat daqiiqa* precision instruments, precision tools. **2** delicate, fine. *ʃis-saʕatiyya fuṿl-u-hum daqiiq* watchmakers' work is delicate. ‖*ʃil-ʃamʕaa ʃ id-daqiiqa* the small intestine.

دقيق *diqiiq* /n/ flour. *diqiiq fiinu* fine white flour (used for making western-type bread). *diqiiq ʕalaama* top quality flour. *diqiiq sinn* bran. ‖*diqiiq is-simiiṭ* semolina. - *diqiiq iṭ-ṭalʕ* pollen (particularly pollen of the male palm flower). - *ʃabu dqiiq* butterfly, moth. - *(yibqa) zet-na fi-dqiq-na* we'll keep it all in the family, as in *nigawwiz il-bint' li-bn[a] ʕamm-a-ha w-yibqa zet-na fi-dqiq-na* we'll marry our daughter to her cousin and keep it all within the family.

دقيقة *diqiiqa* /n pl *daqaayiq*/ minute. *ʕaqrab id-daqaayiq* minute hand (of a clock or watch).

دقّاق *daqqaaq* **1** /n */ **1a** one who grinds spices for sale. **1b** one who grinds ingredients for *taɛmiyya*. **2** /n pl *-aat*/ pile-driver.
مدق *midaqq, madaqq* /n pl *-aat*/ **1** track, footpath. **2** wooden pestle. **3** type of mallet used in ornamental wood-working. **4** rammer.
مدقّة *midaqqa* = *midaqq* 2 and 3.
اتدق *ʔitdaqq* or *ʔiddaqq* /vi/ passive of *daqq*. - iva *mitdaqq*.
اندق *ʔindaqq* = *ʔitdaqq*. - iva *mindaqq*.
دقّق *daqqaq* /vi/ **1** to go into detail, be precise. *bi-ydaqqaq fil-mawḍuuɛ* he leaves no detail of the subject undiscussed. *bi-ydaqqaq fi-ʃuɣl-u* he does his work accurately. **2** to be meticulous, be particular. *ma-tdaqqaq-fⁱ kida* don't be so fussy. *bi-ydaqqaq ɛal-ɡirfⁱ wil-malliim* he's a penny-pincher. *ʔil-mudiir daqqaq maɛaahum fil-mawaɛiid* the director was particular about their being on time. **3** to scrutinize, look carefully. *daqqaqi f-mayyit ik-kubbaaya ḫa-tlaqii-ha miʃ niḍiifa* look closely at the water in the glass and you'll find it's not clean. - vn *tadqiiq*; ava *midaqqaq*.
استدق *ʔistadaqq* /vt/ to consider (e.g., workmanship) fine and delicate. - ava *mistidaqq*.
مستدق *mustadaqq* /adj/ conical.

د ق ق ي
الدقى *ʔid-duqqi* /prop n/ residential area in Guiza.

د ق ل ج
دقلج *daqlig* /vt/ to roll. *daqlig il-barmiil ɛar-raṣiif* he rolled the barrel onto the wharf. - vn *daqlaga*; ava/pva *midaqlig*.
اتدقلج *ʔitdaqlig* or *ʔiddaqlig* /vi/ to roll or be rolled. - ava/iva *mitdaqlig*.

د ق م
دقمة *duqma* (also *dumqa*) <T *tokmak*> /n pl *-aat*/ **1** small wooden mallet. **2** cudgel.

د ق م ا ق
دقماق *duqmaaq* <T *tokmak*> /n pl *daqamiiq*/ wooden mallet.
دقماقة *duqmaaqa* = *duqmaaq*.

د ق ن
دقن، ذقن *daqn* /fem n, pl *duquun*/ **1** chin. ‖ *wiqiɛ li-daqn-u* ≈ he got up to his neck in trouble. **2** beard. *huwwa mrabbi daqn-u* he has a beard. *daqn is-siisi daqn il-faar daqnⁱ mḥammad in-naggaar* (or *in-naʃʃaar* or *il-ɣaffaar*) chant uttered by children in the course of such games as *gabba* (q.v.). ‖ *xud-li daqn-i* give me a shave. - *sallim-ha daqn-u* he let himself be led by her. - *ʔalfⁱ daqnⁱ wala daqn-i* ≈ I'd rather see a thousand killed than get scratched myself. - *diḫkᵃ ɛad-duquun* trickery, knavery. - *min daqn-u wi-ftil-lu* (if he wants a rope take hairs from his beard and make it for him) ≈ make him pay for all he gets. - *ʔatiffᵃ ɛala daqn-i law ...* or *ʔaḫlaq daqn-i law ...* or *ʔaadi daqn-i law ...* ≈ I'll eat my hat if .... - *waaḥid ʃayil daqn-u wit-taani taɛbaan leeh* or *waaḥid ʃaayil daqn-u wit-taani* (or *w-inta) zaɛlaan leeh [prov]* ≈ why get upset about other people's concerns? - *daqn il-baaʃa* variety of tree (Albizzia lebbek), so called because of the beard-like appearance of the long stamens of its greenish-white globose flowers. **3** chin rest (of a violin).
دقّانة *daqqaana* /n pl *-aat*/ **1** curb chain (of a bridle). **2** chin rest (of a violin).

د ق ن و
دقنه *daqnu* /n/ style of serving in the game called *xara sinnu* (q.v.).

د ق و س
داقوس *daquus* /n pl *dawaqiis*/ **1** supporting strut within the sound-box of a stringed instrument. **2** *[naut]* transverse timber supporting the half-deck in a Nile sailing boat.

د ك ا ر
دوكار *dukaar* /n pl *-aat*/ *[obsol]* two-wheeled horse-drawn carriage, trap.

د ك ب ا ج
ديكوباج *dikubaaj* <Fr *découpage*> /n/ cinema shooting-script.

د ك ت ر
دكترة *daktara* /n/ *[mech]* thread-cutting.

د ك ت ر ا
دكتوراه *dukturaah* <Fr *doctorat*> /n/ doctorate.

د ك ت و ر
دكتور *duktuur, duktoor, daktuur*↓ <Fr *docteur*> /n, fem *duktuura, duktoora, daktuura*↓, pl *dakatra*/ **1** medical practitioner. *duktuur nafsaani* psychiatrist. *duktuur biṭari* veterinarian. *duktuur ɛiẓaam* orthopaedist. *duktuur ʔasnaan* dentist. *duktuur ʔaɛṣaab* neuro-

logist. **2** one holding a doctorate, doctor. **3** form of address or reference to any of the above or a pharmacist.

د ك د ر –
ديكادراج *dikadraaj* <Fr *décadrage*> /n/ *[cin]* misframing.

د ك د ك
دكدك *dakdik* /vt/ to tamp down, ram, beat or press down, level out (ground, earth, stone etc.). *ʃil-xeel wi-hiyya b-tigri dakdikit il-ʃarḍ* the galloping horses flattened the ground. - vn *dakdaka*; ava/pva *midakdik*.
اتدكدك *ʃitdakdik* or *ʃiddakdik* /vi/ to be beaten down, be flattened out. - iva *mitdakdik*.

د ك ر
ذكر، دكر *dakar* /pl *dukúra, dukuur*/ **1** /adj/ male (animal or plant). *naxl' dakar* a male palm. ‖*raagil dakar* a real man. - *mara dakar*↓ (1) a no-nonsense woman. (2) a lesbian assuming the male role. (3) a barren woman. - *ɛaamil dakar* acting (1) the tough guy, (2) the ladies' man. - *ʍuzmaar dakar* a *muzmaar* in the baritone range. - *wadaɛa dakar* large spiky sea-shell used in divination. - *ʃil-ħaẓẓ id-dakar* bad luck. - *ʃil-faqr id-dakar* extreme poverty. **2** /n/ **2a** person or animal of the male sex. *dakar baṭṭ* a drake. *kalbit-na wildit talat dukuur wi-ntayteen* our dog gave birth to three male and two female pups. **2b** male (plug, joint, mechanical part etc.). *dakar wi-ntaaya* (1) tenon and mortise. (2) hook and eye fastener. **2c** *[metal]* thread-cutting tap.
ذكر *zakar'* /n/ **1** /pl *zukuur*/ male. **2** /pl *zukúra*/ penis.
ذكّر، دكّر *dakkar* **1** /vt/ to fertilize (of a male palm tree). **2** /vi/ to cease bearing fruit owing to age (of a plant). - vn *tadkiir*; ava/pva *midakkar*.
مذكّر *muzakkar*↑ /n/ *[gram]* masculine.
اتذكّرت *ʃitdakkarit* or *ʃiddakkarit* /vi/ **1** to be fertilized (of a female palm tree). **2** to become a male (through surgery). - ava/iva *mitdakkara*.
استذكر *ʃistadkar* /vt/ **1** to fertilize artificially, pollinate (especially palm trees). **2** to consider male or masculine. **3** to select for masculinity. — /vi/ **4** to behave in a masculine fashion. *bi-tistadkar ɛaleena* ≈ she bosses us around. - ava *mistadkar*.

د ك ر ي ت
دكريتو *dikriitu* <It *decreto*> /n/ *[obsol]* firman, executive decree.

د ك ش
دكش *dukʃ* /adj invar/ huge and strong.

د ك ك [1]
دكّ *dakk'* *(u)* **1** /vt/ to tamp down, pound firm. *bi-ydukku l-xarasaana ɛaʃaan il-meeda* they tamp down the concrete for the foundation. **2** to stuff, cram. *dakk il-maḥfaẓa f-geeb-u* he stuffed his wallet in his pocket. **3** to flatten, raze. *ʃil-infigaar dakk il-ɛimaara* the explosion flattened the apartment building. **4** to tighten the weave of (cloth). - vn *dakk, dakakaan*; ava *daakik*; pva *madkuuk*.
دكّة *dakka* /n pl *-aat*/ *[constr]* **1** foundation layer of crushed stone. **2** block of pre-cast reinforced concrete.
مدكّ *midakk'* /n pl *-aat*/ rammer.
اتدكّ *ʃitdakk* or *ʃiddakk* /vi/ passive of *dakk'*. - iva *mitdakk*.

د ك [2]
دكّة *dikka'* /n pl *-aat, dikak*/ draw-string. - also *tikka*.
مدكّ *midakk²* /n pl *-aat*/ rod for inserting a drawstring into a casing.
مدكّة *midakka* = *midakk²*.
دكّك *dakkik* /vt/ to thread (cord, wire etc.) in the manner of a drawstring. *tadkiik is-silk' f-bakyit if-fabaka* passing the wire through the casing of the (tennis) net. - vn *tadkiik*; ava/pva *midakkik*.
اتدكّك *ʃitdakkik* or *ʃiddakkik* /vi/ to be threaded (of, e.g., a drawstring). - iva *mitdakkik*.

[3] (د ك ك)
دكّة *dikka²* /n pl *dikak*/ bench.
دكّ *dakk²* <Engl>: *ɋumaaʃ dakk* duck (thick cotton cloth).

د ك ل ت –
دكلتيه *dikulteeh* <Fr *décolleté*> **1** /adj invar/ décolleté, low-necked (of a woman's garment). **2** /n pl *-aat*/ neckline of a garment

د ك م
دكمة *dukma* /n/ *[naut]* boom of a lateen sail.
دكمة *dakama* /n pl *-aat, dakam*/ boom of a crane.
دكّم *dakkim* /vt/ *[constr]* to support, underpin. *ħaṭṭu ɛimdaan xaʃab ɛaʃaan yidakkimu ʃaddit il-xarasaana* they put wooden posts to support the casing of the concrete. - vn *tadkiim*; ava/pva *midakkim*.
اتدكّم *ʃitdakkim* or *ʃiddakkim* /vi/ to be supported, be underpinned. - iva *mitdakkin*.

د ك ن

دكّان *dukkaan* /n pl *dakakiin*/ small shop. *dukkaan ʕaṣiir* a juice shop.

دكّانة *dukkaana* /n pl *dakakiin*/ small shop. *dukkaanit sagaayir* a cigarette shop.

دكاكيني *dakakiini* /adv/ illegally, illicitly. *baqeena niftaval dakakiini min ɣeer ruxṣa* we began to work illegally, without a licence.

دكّن *dakkin* /vt and vi/ **1** to conceal, be secretive (about). *ma-tdakkin-ʃ (ʕala) il-mawḍuuʕ wi-ħkii-li b-surʕa* don't be so secretive about it - tell me quickly! **2** to hoard. *fiḍlit tidakkin (ʕala) il-filuus ṭuul ʕumr-a-ha w-maatit mil-ʃaɣniya* she hoarded money all her life and died a rich woman. **3** to purloin, pilfer. *wi-huwwa xaarig mil-maṭʕam dakkin (ʕala) maʕlaqteen* as he was leaving the restaurant he filched a couple of spoons. - vn *tadkiin*; ava/pva *midakkin*.

اتدكّن *ʃitdakkin* or *ʃiddakkin* /vi/ passive of *dakkin*. - iva *mitdakkin*.

د ك ه see د ا ك: *dukha, dukhat, dukhawwa, dukhawwat, dukhawwan, dikha, dikhat, dikhayya, dikhayyat, dikhayyan, dikhiyya, dikhiyyat, dikhiyyan, dukhum, dukhumma, dukhummat, dukhumman, dukham, dukhamma, dukhammat, dukhamman*

د ك و ر

ديكور *dikoor* <Fr *décor*> /n pl *-aat*/ **1** decor, interior decoration. *ʕaamil dikoor* interior decorator. **2** *[theat]* stage-set. *muhandis dikoor* stage designer.

د ل ا ب

دولاب *dulaab* <P *dol-âb*> /n pl *dawaliib*/ **1** cupboard, wardrobe, cabinet. *dulaab ḥifẓ il-malaffaat* filing cabinet. ‖ *dawaliib maftuuḥa* open shelves. - *dulaab (if-faʕriyya)* implement for making *faʕriyya*. - *dulaab in-nixiil* bolter in a flour mill. **2** any of various wheels (e.g., water-wheel, potter's wheel, watch or clock gear-wheel). **3** short instrumental musical form in one key from four to twelve measures in length.

د ل ت ا

دلتا *dilta* /n/ *[geog]* delta. ‖ *ʃid-dilta* the Nile delta, Lower Egypt.

د ل د ق

دلدق *daldaq* /vt/ to spill. *waddi f-faay l-axuu-k bass[i] ma-tdaldaq-uu-ʃ* take the tea to your brother but don't spill it. - vn *daldaqa*; ava/pva *midaldaq*.

اتدلدق *ʃitdaldaq* or *ʃiddaldaq* /vi/ to be spilt. - iva *mitdaldaq*.

د ل د ل

دلدل *daldil* /vt/ to dangle, hang down. *qaʕad fooq il-ħeeṭa w-daldil riglee* he sat on the wall and dangled his legs. ‖ *daldil widaan-u* to look dispirited, as in *lamma ʃaafit in-natiiga ṭiliʕit wi-wdan-ha mdaldila* when she saw the results she left in utter dejection. - vn *daldala*; ava *midaldil*.

دلدول *dalduul* /n pl *daladiil*/ minion, one who is submissive or ineffective. *ʃir-raagil da dalduul miraat-u* that man is hen-pecked. *baʕd[i] ma tgawwizt-u laqeet ʃinnu dalduul ʃumm-u* after I married him I found out he was tied to his mother's apron strings.

اتدلدل *ʃitdaldil* or *ʃiddaldil* /vi/ **1** to dangle, hang limply. *ʃil-furuuʕ lamma tidbal bi-titdaldil ʕal-ʃarḍ* when the branches wither they droop to the ground. **2** to lag, fall behind. *ʃil-maḥsubiyya fiʃ-ʃirka xallit-ni ʃaddaldil* favouritism in the company led to my falling behind (in the promotion stakes). - ava *mitdaldil*.

د ل س

دلّس *dallis* /vi/ to act deceitfully or fraudulently, engage in misrepresentation. *bi-ydallisu ʕan-naas fid-diin* they misrepresent religion to the people. - vn *tadliis*; ava *midallis*.

اتدلّس *ʃitdallis* or *ʃiddallis* /vi/ (impersonal) passive of *dallis*. *yaama n-naas itdallis ʕaleehum* how often people have been deceived! - iva *mitdallis*.

د ل ش

دلس *dalaʃ (i)* /vi/ to plunge. *ʃil-baqara dalaʃit fit-tirʕa* the cow plunged into the canal. - vn *dalʃ, dalaʃaan*; ava *daaliʃ*.

د ل ع ١

دلع *dalaʕ[1]* /n/ **1** pampering, coddling. *da b-sabab dalaʕ ʃahl-u fii* that's because his family spoil him. ‖ *ʃism[i] dalaʕ* pet name. **2** diversion, pastime. *b-afrab sagaayir dalaʕ* I smoke cigarettes just for something to do. *huwwa waaxid fuxl-u dalaʕ* he doesn't take his work seriously. **3** sauciness, coquettishness. ‖ *ya dalaʕ* flirtatious form of address to a pretty female.

دلاعة *dalaaʕa* = *dalaʕ[1]*.

دلّوع *dalluuʕ* /adj/ spoiled, pampered.

دلوعة *dalluuʕa* /n pl *dalaliiʕ, dalluʕaat*/ spoiled child, darling. *ʃaṣl-u ya siid-i dalluuʕit il-mudiir* well, mate, he happens to be the director's pet. *fuft il-waad*

id-dalluuʕa da did you see that spoiled boy?

دلّع *dallaʕ*[1] /vt/ **1** to pet, pamper, spoil. *goz-ha bi-ydallaʕ-ha wi-ygib-laha kull*[a] *ħaaga* her husband pampers her and gets her everything. ‖*ya mdallaʕ* flirtatious form of address to a female ≈ you honey! **2** to give (s.o.) the pet name of. *ʃism-a-ha ʃamal laakin bi-ydallaʕuu-ha miimi* her name is Amal but they call her Mimi as a pet name. - vn *tadliiʕ*; ava/pva *midallaʕ*.

اتدلّع *ʃitdallaʕ* or *ʃiddallaʕ* /vi/ **1** to behave or be treated like a spoiled child. *kibrit wi-lissa b-titdallaʕ* she's grown up but she still behaves like a spoiled child. *bi-titdallaʕ ʕala xaṭib-ha ʠuddaam in-naas* she behaves in a spoiled way with her fiancé in public. **2** to behave frivolously. *ʠaʕad yitdallaʕ fiʃ-fuxl*[i] *w-ṭaraduu* he didn't take his work seriously so they fired him. **3** to act coquettishly. *kull ir-riggaala bi-yħibbuu-ha ʕalaʃaan bit-titdallaʕ* all the men like her because she's a flirt. - ava/iva *mitdallaʕ*.

د ل ع [2]

دلع *diliʕ*[1] *(a)* /vi/ to become bland or insipid (of food). ‖*ʃin-nifs*[i] *dilʕit* to be nauseated, as in *nifs-i dilʕit min kutr*[i] *furb il-mayya* I felt sick from drinking so much water, *nifs-i dilʕit min ħalyaṭ-u* I felt disgusted at his flattery. - vn *dalaʕaan, dalaaʕa, diluuʕa*.

دلع *dalaʕ*[2] *(i)* /vt/ to make (food) insipid. *ṭabbax-hum itʕawwid yidliʕ il-ʃakl* their cook used to produce insipid food. ‖*dalaʕ in-nifs* to nauseate, as in *ṭabix-ha dalaʕ nifs-i* her cooking made me feel sick, *ṭariiʠit kalaam-u dalaʕit nifs-i* the way he was talking disgusted me. - vn *dalaʕaan, dalaaʕa*.

دلع *diliʕ*[2] /adj */ bland, lacking edge, insipid (of food or people).

دلّع *dallaʕ*[2] /vt/ **1** to nauseate (of food or drink). *ʃakl*[i] *is-sudaani bi-ydallaʕ in-nifs* eating peanuts makes you feel sick. **2** to make (food) less salty. *ʃir-ruzz*[i] *da ħaadiʠ ʠawi - ʕaayiz tadliiʕ* this rice is very salty, it needs to be made less so. - vn *tadliiʕ* ava *midallaʕ*.

ادلّع *ʃidlaʕʕ* /vi/ to become bland or insipid. - ava *midliʕʕ*.

استدلع *ʃistadlaʕ* /vt/ **1** to consider (food) insipid. **2** to consider nauseating. - ava *mistadlaʕ*.

د ل ع د ى see – ء د د ل : *ʃiddalʕaadi*

د ل ف ى ن

دلفين *dulfiin* <Engl> /n pl *-aat*/ dolphin.

د ل ق

دلق *dalaʠ (u)* /vt/ to spill, pour out. *xalli baal-ak laħsan tudluʠ if-ʃaay* be careful not to spill the tea! *ʃudluʠi l-mayya fil-ħooḍ* pour the water into the sink. - vn *dalʠ, dalaʠaan*; ava *daaliʠ*; pva *madluuʠ*.

¶ *dalaʠ (nafs-u* or *rooḥ-u) ʕala* to tag after, latch onto. *ma-bi-yḥibb*[a]*-haa-ʃ wi-barḍu dalʠa nafs-a-ha ʕalee* he doesn't like her but still she hangs around him.

مدلوق *madluuʠ* /adj/ loose, flabby, hanging.

دلقة *dalʠa* /n/ tagging (along) after. *baṭṭal dalʠa ʕaleeha* don't be so gone on her!

دلق *dilʠ* /n pl *diluuʠ*/ *[obsol]* woollen cloak.

اتدلق *ʃitdalaʠ* or *ʃiddalaʠ* /vi/ to be poured away, be spilled. - iva *mitdalaʠ*.

¶ *ʃitdalaʠ ʕala* to tag after, latch onto.

اندلق *ʃindalaʠ* = *ʃitdalaʠ*. - iva *mindiliʠ*.

د ل ك [1]

دلك *dalak (i)* /vt/ to rub. *dalak rigl-u* he rubbed his leg. - vn *dalk*; ava *daalik*; pva *madluuk*.

دلكة *dalka* /pl *-aat*/ instance noun of *dalk*. *ʕalee dalka tiffi min ʃawwil marra* he has a way of massaging that cures the first time.

دلّك *dallik* /vt/ to massage, rub. - vn *tadliik*; ava *midallik*.

مدلّكاتى *midallikaati* /n pl *-yya*/ **1** masseur. **2a** homosexual. **2b** one who practises manual masturbation.

اتدلّك *ʃitdallik* or *ʃiddallik* /vi/ to be massaged, be rubbed. - iva *mitdallik*.

د ل ك [2] see د ل ل و ك : *dallooka*

د ل ك ا ت

ديلكات *dilikaat* (also *dilikaah*) <Fr *délicat*> /adj invar/ *[deris]* (over-) refined, genteel.

د ل ك ا ه see د ل ك ا ت : *dilikaah*

د ل ل [1]

دلّ *dall*[1] *(i)* /vt/ to direct, guide. *mumkin tidill-i-ni ʕal-ʕinwaan da* would you direct me to this address? - vn *dall, dalalaan*; ava *daalil*; pva *madluul*.

دلّ *dall*[2] *(u)* /vi/ to stand as proof. *da ydull*[a] *ʕala ʃeeh* what does this prove? - vn *dalaala, dilaala*; ava *daalil*; pva *madluul*.

دلالة *dalaala, dilaala*[1] /n pl *-aat*/ sign, indication, evidence. *dalaala ʕala kida* as evidence of this, as proof of this. *ʃil-ħarb*[i] *laha dalalaat ʠabl*[i] *ma tʠuum* there are signs which precede the outbreak of war.

دلالة *dilaala*[2]*: suuʠ id-dilaala [obsol]* slave-auction

market. ‖ *ʕin ʃa-lla titbaaʒ fi-suuq id-dilaala* ≈ may you go to hell!

مدلول *madluul* /n pl *-aat*/ meaning. *ya tara ʃeeh madluul kalaam-u* I wonder what he means.

دليل *daliil* /n pl *ʃadilla, dalaayil*/ **1** sign, indication, evidence, proof. *da daliil ʒala ʃinn[a] ʒaql-u faaqi* that's proof that he is empty-headed. *daliil qaatiʒ* conclusive evidence. *ʃadilla ʒaqliyya* rational proofs. *bi-daliil ʃinn* ... and the proof is that .... ‖ *qul-li baqa da-na ḫtaar daliil-i* I give up, tell me (the answer). - *dalaayil il-xayraat [Isl]* text recited during specified periods of supererogatory prayer. — /pl *dalaayil* only/ **2** guide, manual, directory. *daliil tilifoon* telephone directory. — /no pl/ **3** *[mus] (ʒalaamit) daliil* key signature.

أدلّ *ʃadall* /el/ more/most indicative. *ma-fii-ʃ ʃadall[i] min kida ʒala kidb-u* nothing could show more plainly that he is lying.

دلّال *dallaal* /n * and pl *dallaala*/ broker, auctioneer.

دلّالة *dallaala* /n pl *-aat*/ woman who peddles ladies' goods (kerchiefs etc.) from house to house, and is thereby in a position to spread gossip and family secrets.

دلّل *dallil[1]* /vi/ **1** to hawk, shout the price of goods in a market place, call for bids in an auction. *waaqif yidallil ʒal-quuṭa ma-ḫadd[i]-ʃ ʒaayiz yiʃtiri* there he stands hawking tomatoes but no one wants to buy. ‖ *ʃilli ydallil ʒala bḍaʒt-u tibuur [prov]* ≈ he who is over-anxious about something will lose it. **2** to prove, offer proof. *dallil ʒala kull illi qaal-u* he offered proof for all that he said. - vn *tadliil*; ava *midallil*.

استدلّ *ʃistadall* /vi/ **1** to obtain information. *ʃistadalleet ʒala l-ʒinwaan* I found out the address. **2** to use as proof. *ʃinta b-tistadill[i] b-kida ʒala ʃeeh* what are you trying to prove with this? **3** to inquire, seek information. *ʃistadalleet ʒaleehum wala ḫadd[i] dall-i-ni* I inquired after them but no one could guide me. - vn *ʃistidlaal*; ava *mistidill*.

د ل ل [2]

دلال *dalaal* /n/ coyness, coquetry. *bi-ysuuq id-dalaal* he plays hard to get. ‖ *ma-ʒad-ʃ[i] dalaal* the good times are gone. - *liik dalaal ʒalee* do you have any influence (through friendship or affection) with him?

دلّل *dallil[2]* /vt/ to spoil, pamper. - vn *tadliil*; ava *midallil*.

اتدلّل *ʃitdallil* or *ʃiddallil, ʃitdallal* or *ʃiddallal* /vi/ to be coquettish, play hard to get, be evasive. *tuqʒud titdallil ʒala ʃayy[i] raagil* she flirts with just anyone. - vn *tadallul↑*; ava *mitdallil*.

د ل ل و ك

دلّوكة *dallooka, dalluuka: raqṣ id-dallooka* a Sudanese dance. *daqqit id-dallooka* type of music played for a Sudanese dance.

د ل م

دلمة *dalama* /n/ *[coarse]* **1** /pl *-aat*/ tip of the clitoris. ‖ *ʃumm[i] dalama* a nymphomaniac. **2** /no pl/ orgasm. *gaab laha d-dalama* or *gaab dalamit-ha* he brought her to orgasm.

د ل م ى ت

دولميت *dulumiit* <Fr> /n/ dolomite.

د ل و see د ل ى : *dalw, dilw↑*

د ل و ق ت see و ق ت : *dilwaqti*

د ل ى

دلو *dalw, dilw↑* /n/ **1** bucket. **2** *ʃid-dalw ،[astrol]* Aquarius.

دلاية *dallaaya* /n pl *-aat*/ **1** hanging. **2** pendant.

دوالى *dawaali* /pl n/ *[path]* varicose veins. ‖ *ʒandu dawaali* he suffers from varicoceles.

دلّى *dalla* /vt/ **1** to hang up, suspend. *nidalli n-nagafa f-wisṭ il-ʃooḍa* let's hang the chandelier in the middle of the room. **2** to lower, let down. *dalleena l-gardal fil-biir ʒafaan il-mayya* we let the bucket down into the well to get water. — /vi/ **3** to have an erection (of male animals). - vn *tadliyya*; ava *midalli*.

اتدلّى *ʃitdalla* or *ʃiddalla* /vi/ **1** to be hung, be suspended, dangle. **2** to trail behind. *ṭarḫit-ha b-titdalla waraaha fil-ʃarḍ* her head-veil is trailing behind her on the ground. - ava/iva *mitdalli*.

أدلى *ʃadla↑* /vi/ to speak out. *ʃadla b-ʃaqwaal-u* to testify. ‖ *ʃadla b-ṣoot-u* to cast one's vote. - vn *ʃidlaaʃ*; ava *mudli*.

د ل ى ا

داليا *dalya* <Engl> /n/ dahlia.

د م

دم *dum* <T *düm* from P> /n pl *-aat*/ *[mus]* a strong beat.

د م ا see د م م [1] : *dima*

د م ا ن

دومان *dumaan* (also *ḍamaan[1]*) <T *dümen* from It> /n

pl *-aat/* **1** *[naut]* helm. *mask id-dumaan* steering. **2** regulator lever in a watch.
دومانجي *dumangi* (also *ḍamangi*) /n pl *-yya/* helmsman.

د م ج
دمج *damag (i)* /vt/ **1** to amalgamate. *damagu kull' ʃarikaat id-duxxaan fi-firka gdiida* they amalgamated all the tobacco companies to form one new company. **2** to alloy. *fil-ɛaada b-yidmigu d-dahab bin-naḥaas* usually they alloy gold with copper. - vn *damg*; ava *daamig*; pva *madmuug*.
اندمج *ʃindamag* /vi/ **1** to be or become amalgamated. **2** to become engrossed, become absorbed. *ʃil-mumassil indamag fid-door* the actor was absorbed in his role. *ʃindamagt' fil-ɋiraaya* I was engrossed in reading. - vn *ʃindimaag*; ava/iva *mindimig*.
أدمج *ʃadmag = damag*. - vn *ʃidmaag*.

د م د م
دمدم *damdim* **1** /vt/ to pat down, flatten. **2** /vi/ to mutter. *ɋaɛad yidamdim ɛas-sibḥa* he was mumbling over his worry beads. - vn *damdama*; ava/pva *midamdim*.

د م ر [1]
دمار *damaar* /n/ ruin.
دمّر *dammar* /vt/ to destroy. - vn *tadmiir*; ava/pva *midammar*.
مدمّرة *mudammira* /n pl *-aat/ [naut]* destroyer.
اتدمّر *ʃitdammar* or *ʃiddammar* /vi/ to be destroyed. - iva *mitdammar*.

د م ر [2] see د م م و ر : *dammuur, dammuriyya*

د م ر [3] see د م ي ر : *dimiira, dimeera*

د م س
دمس *dims* /n/ remains of any threshed crop, used as bedding for cattle, then as fuel.
دمّاسة *dammaasa* /n pl *-aat/* **1** appliance for slow cooking of beans, lentils etc., consisting of a paraffin stove or electric coil, and an aluminium or copper pot with stopper. **2** urn-shaped pot used for slow cooking.
دمّاسي *dammaasi: fuul dammaasi* broad beans which are intended for cooking as *fuul midammis*.
دمّس *dammis* /vt/ to cook (e.g., broad beans, lentils, tripe) in a stoppered container over a slow fire or buried in hot ashes. *(fuul) midammis* dried broad beans cooked by *tadmiis* (a staple food of Egypt). - vn *tadmiis*; ava/pva *midammis*.
اتدمّس *ʃitdammis* or *ʃiddammis* /vi/ passive of *dammis*. - iva *mitdammis*.

د م س ي س
دمسيسة *damsiisa* /n/ sea ambrosia.

د م س ي ه
دماسيه *damaseeh* <Fr *damassé*> /n/ damask cloth.

د م ع
دمع *damɛ* /coll n/ tear(s).
دمعة *dimɛa'*, *damɛa'* /n pl *dimuuɛ, dumuuɛ/* tear. *ʃid-damm' wil-ɛaraɋ wid-dumuuɛ* blood, sweat and tears. *ma-yimsaḥ-ʃ' dimɛit-ak ʃilla ʃiid-ak [prov]* (only your own hand will wipe away your tear) ≈ in times of trouble you can rely only on yourself. ‖*dimɛit-ha sabɋaa-ha* she cries easily. *-ɀayy' dimɛit il-ɛeen* lukewarm.
دمعة *dimɛa* [2] /n/ sauce of tomatoes with stock.
دمّع *dammaɛ* /vi/ to water (of the eyes), shed tears. *fakkarit fii wi-dammaɛit* she thought about him and cried a little. ‖ *ʃis-sama* (or *ʃid-dinya) bi-tdammaɛ* it's drizzling. - vn *tadmiiɛ*; ava *midammaɛ*.

د م غ [1]
دمغ *damaɣ (i)* /vt/ to hallmark (metals) according to purity of content or weight. ‖*damaɣt-u ɛala ɋafaa* I slapped him on the back of the neck. - vn *damɣ*; ava *daamiɣ*; pva *madmuuɣ*.
مدموغ *madmuuɣ* **1** pva of *damaɣ*. **2** /adj/ stamped with a fiscal stamp. *laazim yikuun iṭ-ṭalab madmuuɣ* the application must have a fiscal stamp on it.
دمغة *damɣa* <T *damga*> /n pl *-aat/* **1** *(waraɋit* or *ṭaabiɛ) damɣa* fiscal stamp. *ɛarḍaḥaal damɣa* government petition form with fiscal stamp. *ḍariibit id-damɣa* or *rasm id-damɣa* stamp duty. **2** assay mark. *maṣlaḥit id-damɣa wil-mawaziin* government office responsible for assaying and hallmarking metals.
اتدمغ *ʃitdamaɣ* or *ʃiddamaɣ* /vi/ **1** to be stamped with a fiscal stamp. **2** to be hallmarked or impressed with a mark indicating weight or purity of content. - iva *mitdimiɣ*.
اندمغ *ʃindamaɣ = ʃitdamaɣ*. - iva *mindimiɣ*.

د م غ [2]
دماغ *dimaaɣ* /masc and fem n, pl *dimíɣa, ʃidmiɣa, dimaɣaat/* **1a** top of the head, skull. *ṭuuba wiɋɛit ɛala dmaaɣ-i* a brick fell on my head. *wagaɛ dimaaɣ* (1) headache. (2) bother, fuss, trouble. ‖*gat* (or *ṭabbaɋit) ɛala dmaaɣ-u* he really copped it. *- dimaaɣ baṣal* a large onion. - *ʃiddaa-li dmaaɣ fi-wiff-i* he butted

me in the face. **1b** mind, brain. *ʈiliʒ fi-dmaaʏ-i* it occurred to me. *ma-malit-fⁱ dmaaʏ-u* it didn't convince him. *ʃil-fikra di miʃ daxla dmaaʏ-i* I'm not convinced that this idea is right. ‖*dimaaʏ-u naffa* he is stubborn. -*dimaaʏ-u mṣaffaḥa* (1) he is obstinate. (2) he stays up late. **2** knob, knob-like protruberance. *dimaaʏ il-musmaar* the head of the nail.

د م ق see د ق م : *dumqa*

د م ق ر –

ديموقراطي *dimuqraaʈi* <prob Fr> **1** /adj */ democratic. **2** /n */ democrat.

ديموقراطيّة *dimuqraʈiyya* /n/ democracy.

د م ك

دمك *damak (i)* /vt/ to press together. *gism-a-ha madmuuk* her flesh is firm. - vn *damk*; ava *daamik*; pva *madmuuk*.

مدماك *midmaak, mudmaak* /n pl*madamiik/ [constr]* course of bricks.

اتدمك *ʔitdamak or ʔiddamak* /vi/ to be pressed together. - iva *mitdimik*.

اندمك *ʔindamak* = *ʔitdamak*. - iva *mindimik*.

د م ل ¹

دمل *damal (i)* **1** /vt/ to heal. *ʔil-marham damal il-garḥ* the ointment healed the wound. **2** /vi/ to heal. *ʔil-garḥ ⁱ damal* the wound healed up. - vn *daml, damaḷaan*; ava *daamil*.

اندمل *ʔindamalʔ* = *dimil*. - ava *mindimil*.

د م ل ²

دمّل *dimmil* /n pl *damaamil/* **1** boil. ‖*waaḥid zayyⁱ id-dimmil* a touchy person, **2** cyst.

دمّلة *dimmila* /n pl *-aat/* pustule, pimple.

دمّلاية *dimmilaaya* /n pl *-aat/* pustule, pimple. *dimmilaaya fil-ʒeen* sty.

دمّل *dammil* /vi/ to develop boils, abscesses or pimples. *wiff-u dammil* his face came out in boils. - vn *tadmiil*; ava *midammil*.

د م ل ج

دملج *damlig* /vt/ to make round and well-formed. - vn *damlaga*; ava/pva *midamlig*.

اتدملج *ʔitdamlig* or *ʔiddamlig* /vi/ to become or be made round and well-formed. *ʔil-bintⁱ kibrit wi-gism-a-ha tdamlig* the girl grew up and her figure filled out. - ava/iva *mitdamlig*.

د م ل ك

دملك *damlik* /vt/ to compress, squeeze into a solid mass. *laazim tidamliki l-ʒagiina ʒaʃaan ma-tfarwil-ʃ* you should squeeze the dough together so it doesn't crumble. - vn *damlaka*; ava/pva *midamlik*.

اتدملك *ʔitdamlik or ʔiddamlik* /vi/ to be compressed, be squeezed into a mass. - iva *mitdamlik*.

د م م ¹

دم *damm ⁱ* /n/ **1a** blood. *laḥmⁱ w-damm* flesh and blood. *ʒariib-i min damm-i* my blood relation. *min dammⁱ mluuk* of royal blood. *naʒlⁱ damm* blood transfusion. *faʒrⁱ damm* anaemia. *faṣiilit damm* blood group. ‖*burtuʒaan bi-damm-u* blood oranges. -*ḥagar id-damm* bloodstone. -*damm il-ʃaxaween* dragon's blood. -*ʒaleeha d-damm* she's menstruating. -*(ʃaḥmar) damm il-ʏazaal* deep rose (red) colour. -*ʒumr id-dammⁱ ma-yibʒa mayya [prov]* ≈ blood is thicker than water. -*ʔid-dammⁱ yḥinn [prov]* an uncanny affinity exists between relatives. -*ʈafaḥ id-damm* to work very hard. -*dafaʒ* (or *ṣaraf* or *kaʒʒⁱ) dammⁱ ʒalb-u* to pay a very high price. -*ḍarbit id-dammⁱ ṭṣiib-ak* may a pox take you! -*ḥ-asayyaḥ damm-ak* or *ḥ-afrab min damm-ak* ≈ I'll beat the living daylights out of you! -*damm-i nifif* or *ma-baʒaa-f fiyya wala nuʒṭit damm* or *damm-i hirib* or *damm-i gimid* I was frightened out of my wits. -*fawwar damm-i* or *ḥaraʒ damm-i* he made my blood boil. -*ḥaaga fid-damm* something that runs in the blood, an intrinsic part of one's character. -*ma-fii-f fi-wiff-u damm* he has no shame. **1b** blood feud. *benhum damm* they have a blood feud. **2** disposition, (finer) feeling. *raagil ʒandu damm* a considerate man. *damm-u xafiif* he has a cheerful disposition, he has a sense of humour. *damm-u mʒakkar* he's in a bad mood. *damm-u tʒiil* he is stolid. *damm-u baarid* he is a boor. *damm-u zifir* (1) he is unsympathetic or unresponsive. (2) he has venereal disease. *damm-u yulṭuf* he has a boorish offensive disposition. ‖*wid-damm* response to mention of the name of a person one dislikes. -*ya damm* how boorish! -*ya (salaam ʒala) damm-ak* how offensive you are! what a rotten type you are!

دما، دماء *dima, dimaaʃʔ* /pl n/ much blood. *safkⁱ dima* bloodshed. ‖*maṣṣaaṣ dimaaʃ* extortioner.

دموى *damawi* /adj/ pertaining to blood, bloody. ‖ *mazaag* (or *ʈabʒⁱ*) *damawi* a sanguine temperament (one of the four cardinal humours).

دمويّة *damawiyya* /n/ ruddiness (of complexion, as a sign of good health).

د م م [2]
دمّة *dimma: ʃis-sabɛa w-dimmit-ha* every conceivable evil. - also *timma*.

د م م [3] see ز م م [2]: *damm²*

د م م و ر
دمّور *dammuur* /n/ type of coarse cotton fabric (used extensively in upholstery).
دمّوريّة *dammuriyya* /n/ length of *dammuur*.

د م ن [1]
أدمن *ʔadman* /vt/ to become addicted to. *ʔidmaan is-sukr' ʔarr' ʂiḥḥit-u* addiction to drink damaged his health. - vn *ʔidmaan*; ava *mudmin*.
مدمن *mudmin* /n */ addict. *mudmin muxaddaraat* drug addict. *mudmin ʔiraaya* bookworm. *mudmin riyaaḍa* a sports enthusiast.

د م ن [2] see د م ا ن: *dumaan, dumangi*

د م ن ه –
دمنهور *damanhuur* /prop n/ Damanhour, a city in the Western Delta, the capital of the province of Beheira.
دمنهوري *damanhuuri* **1** /adj/ pertaining to Damanhour. **2** /n */ one from Damanhour. *ʔalf' nuuri wala damanhuuri [prov]* a thousand Nuri gypsies are preferable to a single Damanhouri (a comment on the alleged Damanhouri propensity for cunning).

د م و see د م م: *dima, dimaaʔ, damawi, damawiyya*

د م ي ا ط
دمياط *dumyaaṭ* /prop n/ Damietta, a town on the northern coast of Egypt where the eastern branch of the Nile joins the sea.
دمياطي *dumyaaṭi* /pl *damayṭa, dumyaṭiyya*/ **1** /adj/ pertaining to Damietta. **2** /n/ native of Damietta.
دميط *damyaṭ [joc]* /vt/ to do or make (s.th.) in the style typical of Damietta. *bi-tquul di gibna dumyaaṭi w-hiyya fallaaḥi - baqa kida tdamyaṭ-ha marra waḥda ya naṣṣaab* you say this is cheese from Damietta, but it's just ordinary cheese - and you've made it into Damietta cheese just like that, you cheat! - vn *damyaṭa*; ava/pva *midamyaṭ*.
اتدميط *ʔitdamyaṭ* or *ʔiddamyaṭ* /vi/ to adopt the ways of a *dumyaaṭi*. - ava *mitdamyaṭ*.

د م ي ر
دميرة *dimiira, dimeera* <Copt> /n/ time of (Nile) flood.

د ن ا ر
دينارى *dinaari* <It *danari*> /n/ diamonds (card suit).

د ن ء see د ن ى: *daniiʔ, danaaʔa*

د ن ب
دنب، ذنب *danab* /n pl *ʔadnaab*/ tail. *danab il-ɛaqrab* scorpion's tail. *danab il-ḥayya* serpent's tail.
دنيبة، ذنيبة *dineeba[1]: ʔabu dneeba* tadpole.
دنيبة، ذنيباء *dineeba[2]* /n/ barnyard grass (Panicum crus-galli, Echinochloa crus-galli) grown as a forage crop, and appearing as a weed in rice fields.

د ن ت ل ل
دنتلّة *dantilla, dantilla* (also *tantan↓, tantana↓*) <Fr *dentelle*> /n/ lace. - also *tantilla*.
دنتلّاية *dantillaaya, dantillaaya* (also *tantana↓*) /unit n, pl *-aat*/ piece of lace.

د ن ت ى ل
دانتيل *dantiil, danteel* = *dantilla*.
دنتيلا *dantiila, danteela* = *dantilla*.

د ن ج
دونج *dung* /n pl *-aat*/ portable powered water-pump. - also *dunk*.

د ن ج ل
دنجل *dungul* <T *dingil*> **1** /n pl *danaagil*/ axle. **2** /no pl/ nickname for a tough fast-operating swindler.
دنجل *dangil* **1** /vi/ to hang on under a train (so as to travel without paying), stow away on a train. **2** to play tricks. - vn *dangala*; ava *midangil*.

د ن د ر م
دندرمة، دندورمة *dandurma* (also *dardurma↓*) <T *dondurma*> /n/ ice cream, fruit ice.

د ن د ش
دندش *dandiʃ* /vt/ **1** to (over-)ornament. ‖*nahar-na mdandiʃ* ≈ it must be our lucky day! (said on seeing a pretty girl). **2** to reward (especially with money). *ɛaʃaan il-xidma lli-ddet-haa-li ʔana ḥ-adandiʃ-ak* I'll reward you for the service you've done for me. - vn *dandaʃa*; ava *midandiʃ*.
اتدندش *ʔitdandiʃ* or *ʔiddandiʃ* /vi/ to be (over-)ornamented. - iva *mitdandiʃ*.

د ن د ن
دندن *dandin* /vi/ to hum. - vn *dandana*; ava *midandin*.

د ن د و ن
دندون *danduun* /n/ drip of mucus running from the nose. || *ʃinta fakir-ni b-danduun* do you think I'm just a kid! - also *dannuun*.

د ن د ى
دندى *dindi* <It *dindio*> /n/ turkey meat.

د ن ر [1]
دينار *dinaar* /n pl *dananiir*/ dinar.

د ن ر [2] see د ن ا ر : *dinaari*

د ن س [1]
دنس *dannisˀ* /vt/ to foul, pollute. *dannisu ʃarḍ-i-na ṭ-ṭahra* they fouled our pure land (with their presence). - vn *tadniis*; ava/pva *midannis*; pva *mudannas*.
اتدنس *ʃitdannis* or *ʃiddannis* /vi/ to be fouled, be polluted. - iva *mitdannis*.

د ن س [2] see د ن ى س : *diniis*

د ن ش
دنشة *danʃa, dinʃa* /n pl *-aat*/ pinch (of salt, snuff etc.).

د ن ف
دنف *danaf* /adj invar/ oafish.

د ن ق see د ا ن ق : *daaniq*

د ن ك
دونك *dunk* /n pl *-aat*/ portable powered water-pump. - also *dung*.

د ن م see د ن ى م : *daniim*

د ن م و
دينمو *dinamu* <Fr> /n pl *-haat, dinamuwaat*/ dynamo, generator. || *dinamu l-fariiq* the star player of the team, the dynamo of the team.

د ن م ى ت
دينميت *dinamiit* <Fr> /n/ dynamite.

د ن م ى ك
ديناميكا *dinamiika* <It *dinamica*> /n/ *[phys]* dynamics.
ديناميكى *dinamiiki* /adj/ *[phys]* dynamic.

(د ن ن)
دن *dinn* /n pl *danaani, dinaan*/ wooden cask, butt. || *ʃitnayyil fi-danaani n-niila* ≈ go to hell!
دن *dann- [non-Cairene]* = *tann-*.

د ن ن و ن
دنون *dannuun* /n/ drip of mucus running from the nose. - also *danduun*.

د ن و see د ن ى : *danaawa*

د ن ى
دنى *dini* /adj pl *dunaay*/ **1** gluttonous. **2** base, low. *dini f-ʃaxlaaq-u* of low morals.
أدنى *ʃadna* /el/ **1** more/most gluttonous. **2** lower/lowest, baser/basest. *ʃil-ḥadd il-ʃadna* the minimum.
دنيا *dinya* or *dunya* /fem n/ **1a** world. *fi-dinya ɣeer id-dinya* in another world. || *ʃana ɛamalt[i] ʃeeh fi-dinyit-i* what in the world have I done (to deserve this)? - *ma-daxal-ʃ[i] dinya* he's had no experience with a woman. **1b** great crowd. *ʃil-buliiṣ ga wig-geeʃ wi-dinya* the police came, and the army, and a great crowd. — *ʃid-dinya* or *ʃid-dunya* **2a** the world (especially with a strong connotation of its vastness). *ʃayy[i] balad fid-dinya* any country in the whole world. *fi-ʃaaxir id-dinya* at the ends of the earth. - /used in construct to indicate greatness or an extreme degree/ *firiḥt[i] faraḥ id-dinya* I was overjoyed. *ɋadd id-dinya* (1) very big, very important, as in *muhandis ɋadd id-dinya* a big-shot engineer. (2) very much, as in *b-aḥibb-ik ɋadd id-dinya* I love you with all my heart. || *ʃumm id-dinya* epithet of Cairo. - *sanduuq id-dinya* (1) portable puppet theatre. (2) peep-show. **2b** this world (as opposed to the next). *ʃir-ragil-da karrah-ha fid-dinya w-fig-gawaaz* that man made her hate life and marriage. *ʃid-dinya yoom ɛasal wi-yoom baṣal [prov]* (life is a day of honey and a day of onions) life has its ups and downs. || *bitaaɛ id-dinya* materialist. - *hiyya d-dinya ṭaarit* ≈ what's the rush? **3** the prevailing environment. *ʃid-dinya ḍalma* it's dark. *ʃid-dinya ḥarr* the weather is hot. *ʃid-dinya turaab* it's dusty. *ʃid-dinya bi-tnaṭṭar* it's raining. *ʃid-dinya ṣiyaam* it's a fasting season.
دنيوى *dunyawi* /adj */ worldly, mundane. || *raagil dunyawi* mercenary or materialistic person.
دنياوى *dinyaawi* = *dunyawi*.
دناءة *danaaʃaˀ* /n/ baseness, vileness.
دناوة *danaawa* /n/ gluttony, self-indulgence, sensualism. *ʃid-danaawa ṭabɛ [prov]* self-indulgence is a matter of nature.
دنىء *daniiʃˀ* /adj */ base, vile, contemptible.
دنيئة *daniyyaˀ* /n pl *-aat*/ vile or base deed. *nafs-u ma-tirḍaa-ʃ id-daniyya* he couldn't bring himself to do a

mean thing.
دنّى *danna* /vt/ to demean. *tidanni nafs-ak ɛala ʃakla* will you demean yourself for a bite to eat? - vn *tadniyya*; ava/pva *midanni*.

د ن ى س
دنيس *diniis* /n/ Chrysophrys aurata, a type of sea bream found in the Mediterranean and the Red Sea.

د ن ى م
دنيم *daniim* <Engl> /n/ denim.

د ه [1]
ده *dih* /fem n/ eighth letter of the Arabic alphabet. - also *daal*.

د ه [2] see د ا : *dahú, dahí*

د ه ب [1]
دهب *dihib (a)* /vi/ to become exhausted, become worn out. *dihibt' miʃ-ʃuɣl* I'm worn out from working. - ava *dahbaan*.
مدهوب *madhuub* /adj */ worn out, exhausted. ‖ *ʃibn il-madhuuba [abus]* son of a whore.

د ه ب [2]
دهب، ذهب *dahab* /n/ **1** gold. *ʃil-waqt min dahab* ≈ time is money. *gineeh dahab* gold sovereign. *dahab ʃaɦmar* red gold. *dahab ʃaṣfar* yellow gold. *dahab ʃabyaq* (1) white gold. (2) cotton. *ʃid-dahab il-ʃiswid* black gold (petroleum). *dahab ɋifra* gold-leaf. ‖ *ɛirq' dahab* ipecacuanha. - *giziirit id-dahab* a small island in the Nile at Old Cairo. - *mayyit dahab* or *maaʃ id-dahab* gold lacquer. - *zayy id-dahab* exemplary, admirable (of character), as in *ɋalb-u zayy ıd-dahab* ≈ he has a heart of gold, *ʃir-raagil da muɛamlit-u zayy ıd-dahab* that man is very honest in his dealings. - *mıhna yaakul minha dahab* an occupation from which he makes a very good living. - *ʃit-turaab fi-ʃiid-u dahab* ≈ he's lucky. - *rixiṣ id-dahab wi-ɣili n-naɦaas* ≈ values have been turned completely upside down. **2** /coll/ *[euphem]* bedbugs.
دهبى، ذهبى *dahabi, ẓahabi* /adj */ golden.
دهباية *dahabaaya* /unit n, pl *-aat*/ **1** small piece of gold. **2** *[euphem]* a bedbug.
دهبيّة *dahabiyya* /n pl *-aat*/ *[obsol]* houseboat.
مذهب، مذهب *mudhab* /adj invar/ gilded. *ṣaloon mudhab* gilt sitting-room suite.
دهّب، ذهّب *dahhab* /vt/ to gild. *dahhab ik-kursi da* gild this chair. - vn *tadhiib, taẓhiib*; ava/pva *midahhab*.

مدهّباتى، مذهّباتى *midahhabaati* /n pl *-yya*/ gilder.
اتدهّب، اتذهّب *ʃitdahhab* or *ʃiddahhab* /vi/ to be gilded. - iva *mitdahhab*.

د ه ب [3] see ز ه ب [1] : *madhab*

د ه ت و ر
دهتورة *dahtuura* /coll n/ *[bot]* datura. - also *datuura, tatuura, ʈaʈuura*.

د ه د ه
دهده *dihdah* exclamation of surprise and consternation ≈ what's this?

د ه ر
دهر *dahr* /n pl *duhuur*/ **1** (infinite) time, time from the beginning of the world to the end. *kal ɛaleeha d-dahr' w-ʃirib* ≈ time has done its worst with it, it has suffered at the hands of time. **2** fortune, fate. *dahr-ak ṣafaa-lak* you've come upon good times.

د ه س
دهس *dahas (a)* /vt/ to trample on, crush, run over. - vn *dahs*; ava *daahis*; pva *madhuus*.
اتدهس *ʃitdahas* or *ʃiddahas* /vi/ to be trampled on, be crushed, be run over. - iva *mıtdihis*.
اندهس *ʃindahas* = *ʃitdahas*. - iva *mindihis*.

د ه ش
دهش *dahaf (i)* /vt/ to astonish, amaze. *ɦaaga ṭidhiʃ* an amazing thing. - vn *dahfa*; ava *daahif*; pva *madhuuf*.
دهشان *dahfaan* /adj */ bewildered, perplexed, astonished.
اتدهش *ʃitdahaf* or *ʃiddahaf* = *ʃindahaf*. - ava *mitdihıf*.
اندهش *ʃindahaf* /vi/ to be astonished, be amazed. - vn *ʃindihaaf*; iva *mindihif*.
أدهش *ʔadhafˀ* = *dahaf*. - vn *ʃıdhaaf*; ava *mudhif*.

د ه ك
دهك *dahak (a)* /vt/ **1** to smear or plaster (with mud). **2** to mash (beans, potatoes etc.). - vn *dahk, dihaaka*; ava *daahik*; pva *madhuuk*.
اتدهك *ʃitdahak* or *ʃiddahak* /vi/ **1** to be smeared or plastered (with mud). **2** to be mashed. - iva *mitdihik*.
دهّك *dahhak* /vt/ **1** to plaster (with mud). **2** to mash (food). — /vi/ **3** to eat hashish. - vn *tadhiik*; ava/pva *midahhik*.

د ه ك س
دهكس *duhuks* /n pl *-aat*/ handle of a drover's whip.

د ه ل ز

دهلز *dahliz* **1** /vt/ to postpone, delay. *qaʕad yidahliz-lina ṭ-ṭalab bitaʕ-na l-ḥadd' ma qaaʕ il-waqt* he went on holding up our application until it was too late. **2** /vi/ to make a discreet approach, prepare the way. *da ʕaayiz yidahliz-li ʕafaan ʃagawwiz-lu bint-i* he's trying to soften me up so I'll marry my daughter to him. *qaʕadna ndahliz lil-masʃala di kaam yoom* we spent several days paving the way to this subject. - vn *dahlaza*; ava/pva *midahliz*.

مدهلزاتى *midahlizaati* /n pl *-yya*/ person practised in *dahlaza*.

دهلاز *dihlaaz* /adj pl *dihlaaza*/ smarmy, smooth-talking.

دهليز *dahliiz* /n pl *dahaliiz*/ *[rur]* vestibule, porch (of a house).

اتدهلز ʃitdahliz or ʃiddahliz /vi/ to toady, smarm, deceive by flattery. *yiddahliz ʕan-naas ʕafaan ʃayraaḳ-u* he wheedles his way round people for his own ends. - /impersonally/ *muf ana lli yiddahliz ʕalee* I am not one to be deceived. - vn *tidahliiz*; ava/pva *mitdahliz*.

(د ه ل ل)

دهلّ *duhull* /adj invar/ gullible, gormless. *mara duhull* a dumb broad.

دهلّة *duhulla* <P *duhul*> /n pl *-aat*/ bass drum.

[1] د ه م

دهم *daham (i)* /vt/ to take unawares. *dahamit-ha ʕarabiyya* a car ran into her suddenly. *daham-u ʕazraʃiil* ≈ he died unexpectedly. - ava *daahim*.

داهم *daahim↑* = *daham*. - ava *midaahim*.

[2] د ه م see د ا م: *dahúm, dahumma, dahummat, dahummak, dahumman, duhamma, duhammat, duhammak, duhamman*

د ه ن

دهن *dahan (i)* /vt/ **1** to coat, paint (with oil paint, varnish, grease etc.). ‖*kalaam madhuun* glib talk, unctuous words. - *kalaam il-leel madhuun bi-zibda - ʃiza ṭiliʕ in-nahaar ʕalee saaḥ [prov]* ≈ promises made at night tend to be forgotten the next morning. **2** *[Chr]* to anoint. *bi-yṣallu ʕalee wi-yidhinuu bi-zeet bi-sm ir-rabb* they pray over him and anoint him with oil in the name of the Lord. — /vi/ **3** to toady, curry favour. *ʃidhin-lu ʃwayya w-huwwa yiddii-k illi-nta ʕawz-u* butter him up a bit and he'll give you what you want. **4** to use aphrodisiac ointment. - vn *dihaan, dahaan*; ava *daahin*; pva *madhuun*.

دهان *dihaan, dahaan* /n pl *-aat*/ **1** paint. ‖*dihaan ʕala wabar* something superficial and therefore fragile, as in *ṣuḥubiyyit-hum dihaan ʕala wabar* their friendship can't last. **2** ointment.

دهن *dihn, duhn↑* /n pl *duhuun*/ fat, grease. *laḥma b-dihn* fatty meat. *duhuun nabatiyya* vegetable fats. ‖*dihn il-ward* attar of roses. - *ʃid-dihn' fil-ʕataaqi [prov]* (old chickens are the ones with fat on) the best wine comes in old bottles.

دهنة *dihna* = *dihn*.

دهنى *duhni* /adj/ fatty, greasy. *ʃaʕr' duhni* greasy hair. *ʃaḥmaaḳ duhniyya [chem]* fatty acids. ‖*kiis duhni [path]* sebaceous sac.

دهنيّات *duhniyyaat* /pl n/ fats, fatty foods. *ma-b-akul-ʃ' duhniyyaat ʕalaʃaan ʕamla rijiim* I don't eat fats because I'm on a diet.

دهن *dihin* /adj/ fatty.

أدهن ʔadhan /el/ more/most fatty.

مدهن *midhin* **1** /adj */ fatty. *laḥma midhina* fatty meat. **2** /adj * or invar/ obese. *mara midhina* a fat woman.

اتدهن ʃitdahan or ʃiddahan /vi/ **1** to be coated (with paint, varnish, grease etc.). **2** *[Chr]* to be anointed. - iva *mitdihin*.

دهّن *dahhan, dahhin* /vt/ to paint or smear in blotches. - vn *tadhiin*; ava/pva *midahhin*.

اتدهّن ʃitdahhin or ʃiddahhin /vi/ **1** to oil or anoint oneself. **2** to be oiled or anointed. - vn *tadahhun↑*; ava/iva *mitdahhin*.

داهن *daahin* /vi/ to deceive by flattery. - vn *midahna*; ava *midaahin*.

استدهن ʃistadhin /vt/ **1** to select for fattiness. **2** to consider (too) fatty. - ava *mistadhin*.

د ه ن ن

دهنن *dahnin↓* **1** /vt/ to make greasy. *ḥaasib la-tdahnin ʃidee-k* take care! you may get grease on your hands. **2** /vi/ to become greasy. - vn *dahnana*; ava/pva *midahnin*.

اتدهنن ʃitdahnin↓ or ʃiddahnin↓ /vi/ to become greasy. - ava *mitdahnin*.

[1] د ه و see [1] د ه ى: *dahwa*

[2] د ه و see د ا ه: *dahú*

د ه و ر

دهور *dahwar* /vt/ to cause to decline, cause to deteriorate. *ʃis-sahar dahwar ṣiḥḥit-u* staying up late had a bad effect on his health. - vn *dahwara*; ava/pva *midahwar*.

اتدهور ʃitdahwar↑ or ʃiddahwar↑ /vi/ to deteriorate.

tadahwur il-ɛilaqaat been il-baladeen the deterioration in relations between the two countries. - vn *tidahwiir*↓, *tadahwur*; ava *mitdahwar*.
تدهويرة *tidahwiira* /inst n, pl *-aat*/ a deterioration, a decline.

د ه و س
دهوس *dahwis* /vt/ to trample (on). *ʕil-ɛiyaal dahwisu z-zarɛ* the children trampled on the plants. *ʕana saamiɛ dahwasa barra* I can hear someone trampling about outside. ‖ *dahwis kalaam-i* he rode roughshod over my arguments. - vn *dahwasa*; ava/pva *midahwis*.
اتدهوس *ʕitdahwis* or *ʕiddahwis* /vi/ to be trampled on. - iva *mitdahwis*.

د ه و ل
دهول *dahwil* /vt/ to mess up, wreck, throw into confusion. *ʕil-ɛiyaal dahwilu l-ʕooḍa* the kids made a mess of the room. *ʕil-ɛaya dahwil-u* the illness affected him badly. ‖ *midahwil ɛala ɛeen(-u)* wretched, miserable. - *midahwil fi-rooḥ(-u)* or *midahwil fi-nafs(-u)* scruffy. - vn *dahwala*; ava/pva *midahwil*.
اتدهول *ʕitdahwil* or *ʕiddahwil* /vi/ to get messed up, be thrown into confusion. - iva *mitdahwil*.

د ه و و see د ا ه : *dahuwwa, dahuwwat, dahuwwak, dahuwwan, dihawwa, dihawwat, dihawwak, dihawwan*

د ه ى [1]
دهى *daha (i)* /vt/ to overcome, overwhelm. *ḥaaga dahit-ni - ma-ɛrift'-ʃ ʕakkallim* something came over me; I couldn't speak. - ava *daahi*; pva *madhi*.
داهية *dahya* /n pl *-aat, dawaahi*/ calamity. *gat-ak dahya* ≈ to hell with you! may a calamity befall you! ‖ *waddaa f-dahya* ≈ he caused him a lot of trouble, he gave him a hard time. - *raaḥ fi-dahya* ≈ (1) he came to a bad end. (2) he went, and good riddance to bad rubbish! - *raagil dahya* ≈ a sly devil. *ya dahyit id-dawaahi* ≈ you sly devil! - *ga min ʕanhi dahya* where the hell did he come from! - *dahyit-u (ɛala) baṭn-u* ≈ he's interested only in filling his belly. - *dahyit il-baṭn[a] ḥarra [prov]* ≈ gluttony leads people into a lot of trouble. - *taḥt is-sawaahi dawaahi [prov]* ≈ still waters run deep. - *ya dahya duqqi* ≈ oh no! now we're in for it! - *ya dahya law* ... what a disaster it would be if ..., as in *ya dahya law ḥadd' ʃaf-na* what trouble we would be in if anyone were to see us!
دهوة *dahwa* /n/ calamity. *ya dahwit-i [women]* O my calamity! (a conventional exclamation of dismay), as in *ya dahwit-i ʕeeh illi b-tiɛmil-u ya walah* good God, what are you doing, boy?
أدهى *ʕadha* /el/ more/most calamitous. *wil-ʕadha min kida* ... what's worse than that, as in *wil-ʕadha min kida ma-dafaɛ-ʃ il-ʕigaar* and what is more he hasn't paid the rent!
دهاء *dahaaʔ*↑ /n/ cunning.

د ه ى [2] see د ا : *dahí*

د ه ى ى see د ا : *dihayya, dihayyat, dihayyak, dihayyan, dahiyya, dahiyyat, dahiyyak, dahiyyan, dihiyya, dihiyyat, dihiyyak, dihiyyan*

د و [1]
دو *doo'* <prob It *do*> /n/ *[mus]* **1** the note C. **2** doh.

د و [2] see د و ه : *doo²*

د و ا ى
دواية *dawaaya'* <Fr *douille*> /n pl *-aat, diwy, duwy*/ light-bulb socket. *dawaaya musmaar* bayonet light-bulb socket. *dawaaya ɋalawooz* screw-in light-bulb socket.

د و ب [1]
داب، ذاب *daab (u)* /vi/ **1** to dissolve. *ʕis-sukkar bi-yduub bi-surɛa fil-mayya s-suxna* sugar dissolves quickly in hot water. *madda ɋabla lid-dawabaan* soluble substance. ‖ *(ka-ʕinn-a-ha) faṣṣ' malḥ' w-daab* (she) vanished. - *hiyya dayba fii* she is madly in love with him. - *ɋalb-a-ha daayib ɛala-bn-a-ha* she worries a lot about her son. **2** to wear out. *ʕil-farʃ' daab xalaaṣ* the furniture has completely worn out. *ʕil-yaaɋa baɋit dayba* the collar has worn out. ‖ *ʕibn id-dayba [abus]* son of a whore. - *ḥ-aɋrab-u bid-dayba* I will hit him with the old shoe! - vn *doob, dawabaan*; ava *daayib*.
مديوب *madyuub* /adj */ *[abus]* wretched.
دوّب، ذوّب *dawwib* /vt/ **1** to dissolve, cause to dissolve. **2** to wear out. ‖ *tidawwibii-ha f-ɛaraɋ il-ɛafya [women]* (may you wear it out with healthy perspiration) ≈ wear it in good health! (said to someone who has just bought a new garment). - *tidawwibi ɛadad xeṭan-ha [women]* ≈ may you live to wear out as many garments as this one has threads! (said to someone who has just bought a new garment). - vn *tadwiib*; ava/pva *midawwib*.
تدويبة *tadwiiba* /inst n, pl *-aat*/ **1** a dissolving. *ɛayiz-lu tadwiibit farba dubl' l-baṭn-u* ≈ he needs a strong laxative for his bowels. **2** a wearing out.

اتدوّب ʃitdawwib or ʃiddawwib /vi/ **1** to be dissolved. **2** to be worn out. - iva *mitdawwib*.
مذيب *muziib↑* /n pl *-aat*/ solvent.
مذاب *muzaab↑* /n pl *-aat*/ solute.

د و ب [2] see ي د و ب: *yadoob*

د و ب ي
دوبي *duubi* <Engl> /n pl *dawaabi*/ *[text]* dobby.

د و ت
دوتة *doota* <It *dote*> /n pl *-aat*/ dowry. - also *duʈta, dooʈa*.

د و ت ت
دويتّو *duwittu* <It *duetto*> /n/ duet.

د و ح ر
دوحر *dooḥar* /vi/ to apply oneself determinedly and incessantly, keep at it. *ʔaaʕid yidooḥar fil-mas ʃala leeh* why does he keep on battling with the problem? - vn *mudoḥra*; ava *midooḥar*.

د و ح س see also د ح س
دوحس *dooḥas* /vi/ to become abscessed under the nail (of a finger or toe). - vn *midoḥsa*; ava *midooḥas*.
دحاس *duḥaas* /n pl *dawaḥiis*/ whitlow, abscess under the nail of a finger or toe.

د و خ
داخ *daax (u)* /vi/ **1** to become dizzy. **2** to experience difficulty, be given the run-around. *duxt is-sabaʕ doxaat ʕafaan ʃalaaʔi ḥaaga ʕidla* I had an awful time finding something suitable. ‖*kunti feen ya mara ya dayxa [abus]* where've you been gadding about, woman? - vn *dooxa, dawaxaan*; ava *daayix*.
دوخ *dawax (i)* /vt/ to make dizzy. *ʃil-ḥarr[i] dawax-ni* the heat made me dizzy. - vn *dawaxaan*; ava *daawix*; pva *madwuux*.
دوخة *dooxa* /n pl *-aat*/ dizziness, nausea, dizzy spell. ‖*ya di-d-dooxa* what an awful time!
اتدوخ ʃitdawax or ʃiddawax /vi/ to be made giddy or dizzy. *ʃiddawaxt[i] miḍ-ḍarba* I was stunned by the blow. - iva *mitdiwix*.
دوّخ *dawwax* /vt/ **1** to make dizzy. *ʃil-ʔuʕaad bi-ydawwax-ni* sitting up makes me dizzy. ‖*dawwaxii-ni ya lamuuna* a child's game in which the winner is the one who keeps spinning round longest without getting giddy. **2** to cause (s.o.) difficulty, give (s.o.) the run-around. - vn *tadwiix*; ava *midawwax*.
اتدوّخ ʃitdawwax or ʃiddawwax /vi/ passive of *dawwax*. - iva *mitdawwax*.

د و د [1]
دود *duud* /coll n, pl *didaan*/ worm(s), maggot(s), caterpillar(s). ‖*duud ruumi* leech(es). - *zayy id-duud* (a crowd milling and swarming) like worms. - *maat wi-kal-u d-duud* he died long ago. - *kul id-duud ʔabl[i] ma yakl-ak [prov]* (1) eat the worms (in your food) before they have a chance to eat you (when you die). (2) it's either them or us.
دودة *duuda* /unit n, pl *-aat*/ a worm, a maggot, a caterpillar. *duudit il-ḥariir* or *duudit il-ʔazz* silkworm. *duuda ʃariʈiyya* tapeworm. *ʃid-duuda d-dawwaara* or *duudit il-ʃiskaaris* roundworm. *duudit il-ʔuʈn* cotton-pest. ‖*ʃabu duuda* or *waaḥid ʕandu duuda* catamite, passive homosexual. - *fi-ʔalb-u duuda minni* ≈ he bears a grudge against me.
دوّاد *dawwaad* /n */ (in folk medicine) specialist in removing parasitical worms from the eyes and nose of children or sheep.
دوّد *dawwid* /vi/ to become worm-eaten, become riddled with worms. ‖*raas-u dawwidit* (1) his head became infested with lice. (2) his head was badly affected with ringworm. - *ya mdawwid [abus]* ≈ you creep! - vn *tadwiid*; ava *midawwid*.

د و د [2]
مدود، مذود *madwid, midwid, midwad* /n pl *madaawid*/ feeding-trough, manger.
مزود، مذود *mizwad* /n/ *[Chr]* manger (in a Christmas tableau).

د و د [3] see ء د و د: *ʃadwad*

د و ر
دار *daar[1] (u)* /vi/ **1** to circle, move in a circle, go around. *ʔamar ʂinaaʕi bi-yduur ḥawaleen il-ʃarḍ* a satellite which orbits the earth. *ḥa-nduur ʕala l-makaatib kull-a-ha* we'll go round to all the offices. *durt[i] fid-dunya* I roamed the world. *ʃid-diwaara wara l-banaat* skirt-chasing. *laff[i] w-dawaraan* (1) beating about the bush. (2) deviousness. ‖*ʃil-kaas id-daayir* (the cup which circulates) death. - *bint[i] dayra* a loose girl. - *ʕala daayir malliim* to the last penny. - *ʃeef ʕala baal id-daayir mi-lli bi-yʕaayir [prov]* one who is irresponsible can't understand one who takes things seriously. - *daarit il-ʃayyaam* time went by. - *daayir ma*

yduur or *dayrin daayir* all around, as in *bi-nxayyaṭ-ha daayir ma yduur* we sew all round them. **2a** to revolve, rotate. *kull[a] ɛagala bi-tduur ɛala l-ʕaks' btaɛ-ha* each wheel revolves on its axle. *surɛit id-dawaraan* speed of rotation. *daar ɛala kaɛb-u* he spun round on his heel. *daarit ɛala nafs-a-ha* she turned round. ‖*raas-i daarit* I became dizzy. - *bi-yduur ɛala zabaan-u* he's just bumming around. - *munʃaar dawaraan [carp]* pad-saw. - *ʕil-ḥagar ıd-daayir la budd' min laṭṭ-u [prov]* one who involves himself in many activities should expect a few mishaps. - *ʃimaal duur [mil]* left, turn! *lil-xalf' duur [mil]* about, turn! **2b** to run, turn (of a motor etc.). *ṭiliɛt agiib iʃ-ʃanṭa w-sıbt il-mutoor daayir* I got out to fetch the bag and left the engine running. *xalli l-mutoor yiduur* start the engine! ‖*daarit benhum xinaaqa* they had a quarrel. **3** to reach maturity (of cheese or wine). *bi-ysiibu l-miʃʃ' ɛaʃaan yiduur* they leave the *miʃʃ* to ferment to maturity. ‖*gibna dayra* a cheese made from skimmed milk and matured in milk and salt for at least a year. **4** to be stirred and mixed to the correct shade (of paint). - vn *dawaraan, diwaara, duwaara*; ava *daayir*.

دور *dawar (i)* /vt/ to confuse, perplex. *ḥaaga tidwir id-dımaaʏ* something that confuses the mind. - vn *dawar*; ava *daawir*; pva *madwuur*.

دار *daar[2] (i)* /vt/ **1** to turn, change the position of. *daarıt ḍahr-a-ha liyya* she turned her back on me. **2** to manage, administer. *bi-tdıir ʃuʕuun bet-ha* she manages her household affairs. - ava *daayir*.

دوران *dawaraan* /n pl *-aat*/ **1** curve, curvature. **2** circumference. **3** somersault (in diving).

دورانى *dawaraani* /adj/ rotational. *ḥaraka dawaraniyya* rotational motion.

داير *daayir* /n pl *dawaayir*/ outer edge, surround. *daayir il-maḍrab* the frame of the racquet.

دايرة *dayra* /n pl *dawaayir, dayraat*/ **1** circle, ring. *dayra kamla* full circle. *dayrit is-sinṭar [soccer]* centre circle, ten-yard circle. *ʕid-dayra l-quṭbiyya ʃ-ʃamaliyya* the Arctic Circle. ‖*dayrit maɛaarif* encyclopedia. **2** circuit. *dayra kahrabaʕiyya* electrical circuit. *dayrit zeet* oil circuit. **3** precinct, area defined for a particular purpose. *dayra ntixabiyya* cōnstituency. *dayrit maḥkamit ɛabdiin* the jurisdictional area of the 'Abdin Court. **4** *[leg]* division of a court of justice. **5** *[obsol]* large landholding, usually including several estates.

دايرى *dayri* /adj/ **1** circular. *xaṭṭ' dayri* circular bus-route. ‖*malaff' dayri* circular memo. **2** cylindrical.

دار *daar[3]* /fem n, pl *duur, diyaar*/ **1** *[rur]* house. *ṣaḥn id-daar* courtyard. *min xarag min daar-u ʕitqall' miqdaar-u [prov]* he who leaves home loses respect. *ṣabaaḥ il-xeer ya gaar-i ʕinta f-daar-ak w-ana f-daar-i* ≈ good neighbours are polite to each other but do not interfere in one another's affairs. ‖*moot wi-xaraab diyaar* death and destruction, total ruin. - *ya daar ma-daxal-ik ʃarr* ≈ it's all the same, no harm has been done (said, e.g., in approval of a proposed change in a plan). - *min id-daar lin-naar* ≈ directly, immediately (into trouble). **2** establishment, house. *daar naʃr* publishing house. *daar il-qaḍaaʕ il-ɛaali* the Court of Criminal Appeal. *daar il-ɛuluum* college in Cairo specialising in Arabic and Islamic studies (part of Cairo University). *daar ḥaḍaana* children's nursery. *duur il-muɛallimiin* teacher-training colleges. **3** abode, dwelling place. ‖*ʕid-diyaar il-maṣriyya* Egypt. - *mufti d-dıyaar* the Grand Mufti of Egypt. - *ʕid-daar il-ʕaaxiraʔ* or *daar il-ʕaxraʔ* or *daar il-baqaaʕ* the hereafter. - *daar id-dunya* or *daar il-fanaaʕʔ* this present world. - *daar il-xuld* paradise.

دور *door* /n pl *ʕadwaar*/ **1** turn (in a succession). *bid-door* in turn, by turns. *ɛaleek id-door* it's your go. *laazim tistanna door-ak* you must wait your turn. ‖*door il-mayya [agric]* (one's) turn to be supplied with irrigation water. **2** stage. *door in-nuḍg* stage of maturity. *door iṭ-ṭufuula* stage of childhood. ‖*raagil min door-i* a man of my age. - *huwwa bi-ynaaziɛ fid-door il-ʕaxiir* he is dying. **3** round. *door kutʃiina* a round of cards. *xad (or kisib) id-door* he won the game. *door sagaayir wi-door ḥaaga saqɛa* first cigarettes and then a cold drink. *daxalna maɛa baɛḍ' f-door ṣuḥubiyya* we made friends with each other. **4** circuit. *bi-yiṭlaɛu s-suɛaah bil-ʕadwaar* the messengers go out on their rounds. **5** bout, fit. *ʕid-door bi-yziid wil-ʕazma b-tiigi.ktiir* the bout grows worse and the crisis comes more frequently. *waaxid door zukaam* he has a cold. **6** role. *ʕeeh door il-muwaẓẓaf fil-ḥarb* what is the role of the civil servant in the war? **7** storey, tier. *ɛandu beet ṣuʏayyar talatt idwaar* he has a small three-storey house. ‖*xidmit ʕadwaar* floor service (in a hotel). **8** *[mus]* responsorial musical form consisting of long vocal solo passages beginning in a fixed key and modulating to any number of keys, alternating with choral responses in the original key. **9** *[obsol]* stanza in a *muwaʃʃaḥ*.

دور *dawr: dawr kindi [mus]* rhythmic mode in 7/8 time consisting of a strong beat and two weak beats each of one count followed by a strong beat and a weak beat, each of two counts.

دورة *doora* /n pl *-aat*/ **1** cycle, system (e.g., of an engine). ‖*doorit mayya* water-closet, lavatory. **2** ride (on, e.g., horse or camel).

دورة *dawraʔ* /n pl *-aat*/ **1a** (cyclic) stage, (seasonal) session. *dawra tadribiyya* training cycle. *dawra*

fahriyya menstrual period. *dawra ziraʕiyya* crop rotation. *dawrit il-baraamig iṣ-ṣefiyya* the summer period (radio and television) programmes. **1b** tournament. **1c** revolution. **2** circulation. *ʃid-dawra d-damawiyya* blood circulation.

دورى *dawri* **1** /adj/ periodic. *ʕilaawa dawriyya* annual increment. *bi-ṣifa dawriyya* periodically. **2** /n/ sporting tournament (notably the football championship).

دوريّة *dawriyya* /n pl *-aat*/ patrol, military patrol. *ʕasaakir id-dawriyya* police patrol. *ʃid-dawriyyaat is-saaḥiliyya* coast patrols, coastguard.

دوريّة *diwariyya, dawariyya* /n pl *-aat*/ **1** circumference. *ʃizraʕ-u f-dawariyyit is-suur* plant it around the fence. **2** *[butcher]* intestines and surrounding parts.

دوّار *dawwaar*[1] /adj/ revolving. *baab dawwaar* a revolving door. *riiḥ dawwaar* cyclone. *makanit iṭ-ṭibaaʕa d-dawwaara* rotary press (newspaper). ‖ *ʃid-duuda d-dawwaara* roundworm. - *ʕumr id-dawwaara ma-trabbi katakiit [prov]* (a woman who is never at home can't raise chicks) ≈ a rolling stone gathers no moss.

دوّار *dawwaar*[2] or *duwwaar* /n pl *dawawiir*/ *[rur]* **1** common guest-house in a village, for the accommodation of strangers. *dawwaar il-ʕumda* place where the village mayor receives officials and visitors. **2** cattle-pen.

دوّارة *dawwaara* (also *dawwaarit ir-riiḥ*) /n pl *-aat*/ weathercock.

ديّاره *dayyaara*[1] /n pl *dayayiir, dayyaraat*/ large grain sieve.

مدار *madaar* /n pl *-aat*/ **1** track on which an animal moves around a water wheel. **2** orbit. ‖ *ʕala madaar is-sana* (or *il-ʕaam*) all the year round, as in *ʃil-burtuqaan bi-nlaqii dilwaqti ʕala madaar is-sana* now we find oranges all through the year. - *madaar il-gady* Tropic of Capricorn. *madaar is-saraṭaan* Tropic of Cancer. - *ʃil-madaar ʕala* ... the essential thing is ..., as in *ʃil-madaar ʕal-fuluus li-kmaalit il-maʃruuʕ* money is essential to finish the project, *ʃil-madaar ʕala mwafqit-u* all that matters is his approval.

اتدور *ʃitdawar* or *ʃiddawar* /vi/ to be confused, be perplexed. - iva *mitdiwir*.

اندور *ʃindawar* = *ʃitdawar*. - iva *mindiwir*.

اندار *ʃindaar* /vi/ to turn. *ʃindaar ʕalayya* he turned on me. ‖ *bil-mindaar* back to front, as in *ʃid-dinya maʃya bil-mindaar* the world is going backwards. - *daayir mindaar* all round. - ava *mindaar*.

دوّر *dawwar* /vt/ **1a** to cause to turn (round). *dawwarna l-ʕarabiyya wi-rgiʕna* we turned the car about and went back. ‖ *dawwar maktab [mil]* command to report to the commanding officer (for wrongdoing). **1b** to cause to circulate. *dawwar il-kaas ʕaleena* pass the glass around to us. ‖ *dawwar laha ʕaql-a-ha* he perverted her thinking. **2** to make round. *dawwari ḥardit il-kumm*[i] *fwayya* cut the sleeve with more curve. **3a** to cause to run, cause to be in operation. *dawwar il-makan* start the engines! **3b** to cause to be under way or in progress. *dawwar xinaaqa benhum* he set a quarrel going between them. **4** to stir and mix (paints and the like) correctly. — /vi/ **5** to turn around, turn back. *ʃil-ʕarabiyya ʕaṭlaana w-ḥa-tdawwar ʕal-garaaj* the bus has broken down and is going to go back to the garage. **6** to look (for s.th.), quest, search. *ʃilli ydawwar yilaaqi* ≈ seek and you shall find. *bi-ydawwar-li ʕala faqqa* he's looking for a flat for me. *laazim tidawwaru ʕalee wi-tgibuu min taḥt il-ʃarḍ* you must search for it and bring it, regardless of effort. *ʃibn-u ʕala kitf-u w-bi-ydawwar ʕalee [prov]* ≈ it's right under his nose and he can't find it. *dawwart*[a] *ʕalee ṣalqaṭ fi-malqaṭ* I have looked high and low for it. - vn *tadwiir, tadwiir*; ava/pva *midawwar*.

تدوير *tadwiir* /n pl *-aat*/ twisting (of threads).

تدويرة *tadwiira* /n pl *-aat*/ **1** instance noun of *tadwiir*. **2** semicircular cut in cloth.

مدوّر *midawwar* **1** /adj */ round, rounded, curved. *ʃibra mdawwara* a curved needle. ‖ *ʃil-ʕeen il-midawwara [magic]* the evil eye. **2** /n/ *[mus]* a rhythmic mode in 12/4 time.

ديّر *dayyar* /vt/ to turn (s.th.) around. *dayyart il-maktab* I turned the desk around. *ʃit-tarzi dayyar il-jakitta* the tailor remade the jacket with the cloth reversed. *laazim tidayyar il-maraqa* you must stir the gravy. ‖ *dayyar dimaay-i* he got me to change my mind. - *ḥaaga tdayyar il-muxx* something that puts one at a loss. - vn *tadyiir*; ava/pva *midayyar*.

اتدوّر *ʃitdawwar* or *ʃiddawwar* /vi/ **1** to turn round. **2** to be or become turned round. - ava/iva *mitdawwar*.

اتديّر *ʃitdayyar* or *ʃiddayyar* /vi/ to move through a revolution. *ʃil-wagaʕ kaan fi-baṭn-i wi-tdayyar li-wara w-taḥt* the pain was in my abdomen, then it moved round behind and further down. - ava *mitdayyar*.

داور *daawir* /vt/ to equivocate with, be devious with (s.o.). *yuqʕud yiḥawir-ni wi-ydawir-ni* he never gives me a straight answer. - vn *midawra*; ava *midaawir*.

مداورة *midawra, mudawra*↑ /n pl *-aat*/ deviousness.

أدار *ʔadaar* /vt/ to manage, administer. *suuʔ il-ʔidaara* mismanagement. *maglis il-ʔidaara* administrative board, board of directors. ‖ *muftaaḥ il-ʔidaara [auto]* starter switch. - *ḥa-tiʕmil ʔidaara ʕala miin* who you are bossing! - vn *ʔidaara, ʔadaara*↓; ava *mudiir*.

إدارة *ʔidaara* /n pl *-aat*/ administrative department. *ʔidaarit it-taḥqiqaat* the Office of Investigation. *ʔidaarit*

it-taraxiiṣ the licensing department. *ʕidaarit il-ʕafraad* personnel office.

إداري *ʕidaari* /adj */ administrative, executive. *musaaɛid ʕidaari* administrative assistant. *mudiir if-fuʕuun il-ʕidariyya* director of administrative affairs. *ʃahaada ʕidariyya* certificate authenticated by two governmental officials and their immediate supervisor. *kaadir ʕidaari* administrative pay scale. *rusuum ʕidariyya* administrative fees. ‖*yoom ʕidaari [mil]* day set aside for washing clothes.

إدارجي *ʕidargi* /n pl *-yya*/ good administrator.

مدير *mudiir* /n */ manager, director (of a company, government department etc.). *mudiir ɛaamm* director general. *mudiir mustaxdimiin* personnel director.

مديريّة *mudiriyya* /n pl *-aat*/ **1** *[obsol]* former designation of an Egyptian province (later termed *muḥafẓa*, the sole exception being *mudiriyyit it-taḥriir*). **2** designation of the provincial apparatus of a ministry (headed by a *mudiir ɛaamm*). *mudiriyyit it-tarbiya wit-taɛliim fi-bani sweef* the Directorate of Education in Bani Suef.

مستدير *mustadiir* /adj */ rounded.

د و ر ق

دورق *dooraq* /n pl *dawaariq*/ **1** pitcher or jug. **2** *[chem]* flask. **3** glass bowl of a water-pipe (see Pl.I, 5).

د و ز ن

دوزن *doozan* <T *düzen*> /vt/ to tune (an instrument). - vn *duzaan, miduzna*; ava *midoozan*.

د و س [1]

داس *daas (u)* /vt/ **1** to step on, tread on, trample on. *daas il-ward* he trod on the flowers. *duus banziin* step on the gas! *ʕiwɛa l-ɛarabiyya tduus-ak* be careful the car doesn't run you over! ‖ *ʕilli yiɛmil ɖahr-u ɖanṭara yistaḥmil id-doos [prov]* he who accepts mistreatment in the beginning should not complain of its continuation. – /vi/ **2** to step, tread, trample. *daas fil-waḥla* he stepped in the mud. ‖*ma-ḥadd'-ʃ das-lu ɛala ṭaraf* nobody gave him cause to be angry. - *ʕilli yduus ɛaleek duus ɛalee* show no consideration to those who show you none. - *bi-yduus ḥaafi* he goes barefoot. **3** to exert pressure. *baṭn-i b-tiwgaɛ-ni lamma ʕaduus ɛaleeha* my stomach hurts when I press it. **4** to lay emphasis. *laazim ʕaduus ɛan-nuqṭa di* I must emphasize this point. - vn *doos, dawasaan, diwaasa, duwaasa*; ava *daayis*.

دوس *doos: ḥoos doos* utter confusion, as in *xallu l-masʕala ḥoos doos* they turned the matter into a complete mess.

دوسة *doosa'* **1** instance noun of *doos*. ‖*(ya ḥost-i) ya dost-i [women]* ≈ what a calamity! **2** /n/ Sufi ceremony in which the sheikh walks upon the necks of his followers.

دوّاسة *dawwaasa* /n pl *-aat*/ any of the range of things upon which a foot may be placed, or the pressure of a foot exerted (e.g., foot-rest, treadle, duck-board, pedal, bath-mat, car-mat etc.).

مداس *madaas*↓ /n pl *-aat*/ pair of any type of footwear. ‖*ɛamal li-... xadd-u madaas* (to make one's cheek a stepping place for ...), treat (s.o.) with the utmost respect.

انداس *ʕindaas* /vi/ **1** to be trodden on, be walked on. *naas bi-tindaas wi-naas bi-tinbaas [prov]* (some people are trodden on and some are kissed) ≈ life is a matter of luck. **2** to be degraded. - iva *mindaas*.

اتداس *ʕitdaas* or *ʕiddaas* = *ʕindaas*. - iva *mitdaas*.

دوّس *dawwis* = *daas*. - vn *tadwiis*; ava/pva *midawwis*.

اتدوّس *ʕitdawwis* or *ʕiddawwis* = *ʕindaas*. - iva *mitdawwis*.

د و س [2]

دوسة *doosa'* <P *dû-sih*> /n pl *-aat*/ pair of threes (in backgammon).

د و ش [1]

دوش *dawaʃ (i)* /vt/ to bother, irritate, trouble. *dawaʃit-na b-ṭalabat-ha k-kitiira* she bothered us with her numerous requests. *ʕinta dawaʃt' dmaav-i* you gave me a lot of trouble. *ʕil-ɛiyaar illi ma-yṣib-ʃ' yidwiʃ [prov]* (the bullet which doesn't hit its mark is (nevertheless) a bother) one may have been saved the bite, but the barking was bad enough. - vn *dawaʃ, dawʃa*; ava *daawiʃ*; pva *madwuuʃ*.

دوشة *dawʃa* /n pl *diwaʃ*/ **1** loud noise, din, uproar. *miʃ ɖaadir ʕaftaval fid-dawʃa di* I can't work in this din. **2** fuss and bother, commotion. *ʕaɛmil-lak dawʃa* do you want me to make a scene! ‖*wid-dawʃa di* and what-have-you, and so on, as in *lamma ɛazzilu kaan laazim yaxdu l-ɛaff' wil-hiduum wiʃ-ʃunaṭ wid-dawʃa di kull-a-ha* when they moved, they had to take their furniture, clothes, bags and everything.

دوشجي *dawʃagi* /n pl *-yya*/ noisy boisterous person.

أدوش *ʕadwaʃ* /el/ more/most noisy.

اتدوش *ʕitdawaʃ or ʕiddawaʃ* /vi/ to be irritated, be bothered, be troubled. - iva *mitdiwiʃ*.

اندوش *ʕindawaʃ* = *ʕitdawaʃ*. - iva *mindiwiʃ*.

د و ش ²
دوش *doof* <T *döş*> /n/ rib-cut (of meat).

د و ط
دوطة *dooṭa* <It *dote*> /n pl *-aat/ [Chr]* dowry. - also *duṭṭa, doota*.

د و غ
داغ *daaɣ* <poss Copt>: *gaab daaɣ(-u)* to knock the living daylights out of (s.o.).
دوّغ *dawwaɣ* /vt/ to wear out, exhaust, consume. *ʿaswit l-ʕayyaam dawwaɣit-ni* hard times got me down. - vn *tadwiiɣ*; ava/pva *midawwaɣ*.
مدوّغ *midawwaɣ* /adj */ sophisticated, hardened by experience. *da raagil midawwaɣ ma-yustahan-ʃ[i] bii* he is a hard nut, not to be trifled with.
اتدوّغ *ʕitdawwaɣ* or *ʕiddawwaɣ* /vi/ to be worn out, be exhausted, be consumed. - iva *mitdawwaɣ*.

د و ق ¹ see also ز و ق ²
ذاق، داق *daaq[ʿ] (u)* /vt/ **1** to taste. *duuq ʿabl[i] ma tiftiri* taste before you buy. ‖ *ʕilli ma-yduuq il-murr[i] ma-yiɛraf il-ħilw* ≈ only after experiencing hard times can one appreciate good fortune. - *duʿt il-ħilw[i] wil-murr* ≈ I've tried everything. - *ʿaalit yaama l-ħalaawa ħilwa*. - *ʿaalu duʿtii-ha* She said 'How sweet the confection is!' They said 'Have you tasted it?' (applied to one who passes judgement on others without first-hand knowledge). - *yaama tduuq ɛala lsaan-ak* ≈ you'll have to go through a lot! you'll have much to experience. **2** to appreciate. *yiduuq il-ʕalwaan* he has colour sense. - vn *dooq, dawaʿaan, diwaaʿa, dawaaʿa*; ava *daayiʿ*.
ذوّاق، دوّاق *dawwaaq* /n */ taster. *ʕir-rakk[a] ɛad-dawwaaq [vendor's cry]* (it's up to the taster) ≈ taste them and see!
مذاق، مداق *madaaq* /n/ taste. *ʕil-waṣf[i] miʃ kifaaya ʕir-rakk[a] ɛal-madaaq* it's not enough to describe (the food to me); it's the taste that matters.
انداق *ʕindaaq* /vi/ to be tasted. - iva *mindaaq*.
اتداق *ʕitdaaq* or *ʕiddaaq* = *ʕindaaq*. - iva *mitdaaq*.
ذوّق، دوّق *dawwaq* /vt/ to cause to taste. *ʕadawwaq-ak minnu ħitta* I'll give you a bit of it to taste. ‖ *ʃawwaʿt-i-ni wala dawwaʿt-i-ni [prov]* you tantalize me with things that are not in your power to give. - vn *tadwiiʿ*; ava/pva *midawwaʿ*.

د و ق ²
دوق *dooq* <Engl> /n pl *-aat/* duke.
دوقة *dooqa* /n pl *-aat/* duchess.
دوقيّة *doʿiyya* /n pl *-aat/* duchy.

د و ك
دوكة *dooka[ʾ]* /n/ uproar, din, tumult. *miin ɛaamil id-dooka di barra* who is making that noise outside? *xuduu-hum fi-dooka la-yiɣlibuu-ku* ≈ overwhelm them with bluster lest they defeat you (said to one who monopolizes or shouts in a discussion). *ɛamliin dooka w-dabaka ɛal-faaḍi* they are causing a hullabaloo for nothing.
دوّك *dawwik* /vi/ to make (loud) noise. *ʃir-radyu dawwik ɛalayya* the radio overwhelmed me with its blaring. - vn *tadwiik*; ava *midawwik*.
اتدوّك *ʕitdawwik* or *ʕiddawwik* /vi/ to be overwhelmed by noise, be shouted down. - iva *mitdawwik*.

د و ك ا
دوكاه *dooka²* <P *du-gâh*> /n/ *[mus]* the note D.

د و ك و
دوكو *duuku* <trade n *Du [Pont] Co*> /n/ paint with which cars, refrigerators etc. are sprayed, body paint. *maħall[i] duuku* paint-spraying workshop. ‖ *warniiʃ duuku* car polish.

د و ل ¹
دولة *dawla* /n pl *duwal, diwal, dawlaat/* nation, state. *mizaniyyit id-dawla* the national budget. ‖ *ʕid-duwal il-kubra* (or *il-ɛuẓma*) the major powers. - *ṣaaħib id-dawla [obsol]* title of the Prime Minister. - *ʃirɑuṣ lil-ʿird[i] f-dawlit-u [prov]* dance for the ape in his kingdom. - *ʕil-ʕayyaam duwal [prov]* life is full of ups and downs.
دولي *dawli, duwali* /adj */ international.
دوّل *dawwil* /vt/ to internationalize. - vn *tadwiil*; ava/pva *midawwil*.
تدويل *tadwiil* /n/ internationalism.
اتدوّل *ʕitdawwil* or *ʕiddawwil* /vi/ to be internationalized. - iva *mitdawwil*.
مداولة *mudawla* /n pl *-aat/ [leg]* consultation (between judges before passing sentence). *ɣurfit il-mudawla* judges' retiring room. *ʕil-ħukm[i] baɛd il-mudawla* judgement will be pronounced (directly) after consultation.
اتداول *ʕitdaawil* or *ʕiddaawil* /vi/ **1** *[leg]* to consult together (of judges, to reach a decision or a sentence). **2** to be in circulation, be current. - vn *tadaawul*; ava *mutadaawil*.
متداول *mutadaawal↑* /adj/ current, in circulation, prevalent.

² د و ل see ا د: *dool, dooli, doola, doolat, doolak, doolan*

¹ د و م

دام *daam*² *(u)* /vi/ to last, endure, persist. *zibuun daayim lil-maḥaṭṭa* a permanent customer of the station. ‖*yiduum* (long may it last) ≈ may you always be well enough off to give to others (said to a host after eating or drinking, or on receipt of a gift or favour). -*yiduum faḍl-ak* may your bounty last (conventional reply to *ʕitfaḍḍal*). -*daamit ḥayaat-ak* may you live forever (conventional reply to *sufra dayma*). -*ɛala d-dawaam* for ever and always. -*dawaam il-ḥaal min il-muḥaal [prov]* ≈ nothing lasts for ever. -*ʕid-dawaam li-llaah* immortality is for God (alone) (said in consolation at funerals). -*sufra dayma* ≈ may your table always be laden (said by a guest on finishing a meal). -*ʕid-daaʕimit il-batuliyya [Chr]* Ever Virgin (epithet of the Virgin Mary). -vn *doom, dawaam*; ava *daayim, daaʕim*↑.

¶ *ma-daam* /occurs both inflected and non-inflected, w conj function/ as long as, since. *ʕana ḫ-aftaḥ-ha ma-dumt'* (or *ma-daam*) *ʕinta labxa kida* I'll open it, since you're so clumsy. *fiiha ʕeeh ma-daamit* (or *ma-daam*) *hiyya ɛagbaa* what's wrong with it, so long as he's pleased with her. see further under ² م د ا م

يديم *yidiim* /vt, imperf and imper only/ to perpetuate (of God). *ya rabb' diim il-maḥabba ɛaleena* O Lord, make our (brotherly) love last forever!

دايم *daayim* /n/ Everlasting One (epithet of God).

¶ *dayman* **1** /adv/ always. *ʕis-sitt' minnina dayman miḥtaaga l-raagil* we women always need a man. *dayman b-awzin il-laḥma mın ɣeer waraq* I always weigh the meat unwrapped. **2** /interj/ ≈ may your bounty last (said to a host after eating or drinking).

أدوم *ʕadwam* /el/ more/most lasting.

دوّامة *dawwaama* /n pl *-aat*/ **1** whirlpool. ‖*laqeet nafs-i f-dawwaamit if-fuɣl* I found myself up to my neck in work. **2** whirlwind.

دوّم *dawwim* **1** /vt/ to whirl, cause to turn, spin or rotate rapidly. *ʕin-nawwa dawwimit il-qaarib* the high wind whirled the boat around. **2** /vi/ to whirl, spin, rotate rapidly. -vn *tadwiim*; ava/pva *midawwim*.

داوم *daawim* /vi/ to continue, persevere. *bi-ndaawim ɛala r-rayy' kull' ʕusbuɛeen* we continue to irrigate every two weeks. -vn *midawma*; ava *midaawim*.

استدام *ʕistadaam* /vi/ to continue, remain. *ʕil-maraḍ istadaam ɛala kida ʃahreen* the illness continued like this for about two months. ‖*ʕawaamir mustadiima [mil]* standing orders. -*sulfa mustadiima [admin]* advance cash (for operational expenditure). -*zarɛ' mistadiim* perennial crops. -vn *ʕistidaama*; ava *mistadiim, mustadiim*.

² د و م

دوم *doom* /coll n/ **1** doum-palm(s) (Hyphaene thebaica). **2** fruit(s) of the doum-palm.

دومة *dooma* /unit n, pl *-aat*/ **1** a doum-palm. **2** a single doum fruit.

¹ د و ن

دون *duun* /adj invar/ low, wretched. *ʕil-mahiyya duun* the pay is miserable. *raagil duun* a scoundrel. *da duun id-duun* he's the lowest of the low.

¶ *bi-duun* without. *bi-duun sabab* for no reason. *ʃagsaam bi-duun ʕiḥsaas* bodies without feeling. -*min duun* (1) (also *duunan ɛan*) in contradistinction to, as in *ʕinti min duun in-naas kiwayyisa* you alone are good, *bi-yifrabu kunyaak min duun iz-zabaayin* they out of all the customers are the only ones who drink cognac. (2↓) without, as in *maɛquul qarabit-ak min duun sabab* is it conceivable that she hit you for no reason?

استدون *ʕistadwin* **1** /vt/ **1a** to select for meanness or baseness. **1b** to consider mean or base. *ʕana stadwint' nafs-i fil-ɛamla di* I despised myself for this act. **2** /vi/ to behave basely or despicably. -ava *mistadwin*.

² د و ن

ديوان *diwaan* /n pl *dawawiin*/ **1** (loosely) any government office or department. *diwaan ɛaamm* headquarters (of a government department). **2** compartment (in a train). **3** anthology (of poems). **4** *[mus]* octave. *ʕid-diwaan il-ʕawwil* the lowest octave on any instrument. *diwaan kibiir* a major scale. *diwaan ṣuɣayyar* a minor scale. **5** *[magic, Isl]* realm of spirits. *ʕahl id-diwaan* (good) spirits. ‖*raaḥ fi-dawawiin-u* (1) he fainted. (2) he became lost in thought. (3) he fell into a deep sleep.

ديوانى *diwaani* /n/ **1** ornate calligraphic style of Ottoman origin. **2** *[obsol]* government coin.

دوّن *dawwin* /vt/ **1** to record, enter (in a book etc.). *dawwin ʕaqwaal-u w-maḍḍaa ɛaleeha* he took down his testimony and made him sign it. **2** *[mus]* to notate. -vn *tadwiin*; ava/pva *midawwin*; pva *mudawwan*↑.

اتدوّن *ʕitdawwin* or *ʕiddawwin* /vi/ **1** to be recorded, be noted down. **2** *[mus]* to be notated. -iva *mitdawwin*.

د و ه
دو *dooh* (also *doo²*) <P *dû*> /n pl *-aat*/ two (in dice etc.).

د و و see د ا: *dawwa, dawwat, dawwak, dawwan*

د و ى ¹
دوا، دواء *dawa* /n pl *ʕadwiya*/ medicine, remedy. *ḥ-aktib lukum dawa ymawwit il-mikroob* I'm going to prescribe you a medicine to kill the germ. *ʕiṣ-ṣabr¹ ʕaḥsan dawa* patience is the best cure. *ʕid-daaʕ iṭ-ṭifis lii ʕid-dawa n-nigis [prov]* a nasty disease requires a foul medicine. ‖*dawa ṣaraṣiir* substance for killing cockroaches.
داوى *daawa* /vt/ to treat, cure. -vn *midawiyya*; ava *midaawi*.
اتداوى *ʕitdaawa* or *ʕiddaawa* /vi/ **1** to seek a cure. **2** to be cured, be treated. -ava/iva *mitdaawi*.

د و ى ²
يدوى *yidwi* /vi, imperf and imper only/ to resound, make a ringing sound. *widaan-i b-tidwi* my ears are whistling. ‖*lamma tidwi* not even if you cry to the Heavens! -*nizil yidwi* he fell flat! -*ʕidwi* what a thrashing! (said, e.g., when the speaker is watching a fight). -*ʕid-dayy¹ fil-widaan ʕaktar miṣ-siḥr [prov]* constant repetition of an idea in someone's ears is more effective than magic. -vn *dayy, dawy*; ava *daawi*.
دوّى *dawwa¹* /vi/ to make a ringing sound, reverberate. *lissa bi-tdawwi fi-wdaan-i* it is still ringing in my ears. -ava *midawwi*.

د و ى ³
دواة، دوايه *dawaaya²* (also *dawaayit ḥibr*) /n pl *-aat, diwy, duwy*/ inkwell, inkpot.

د و ى ⁴ see د و ا ى: *dawaaya¹*

د و ى ك
دويكة *diweeka*· *diik id-diweeka* ≈ cock of the walk.

د ى ا ز see د ى ى ز

د ى ا ك ن
دياكن، ذياكن *diyaakun* (also *ziyaakun*) <Gr *diakonos*> /n pl *-aat*/ *[Chr]* deacon, a grade in the hierarchy of the Coptic church.
دياكنيّه، ذياكنيّه *diyakuniyya* /n/ *[Chr]* organization of deacons working as preachers in country districts.

د ى ب
ديب، ذئب *diib* /n pl *diyaaba, diyaab, diyíba*/ **1** dieb, jackal. ‖*ʕinab diib* black nightshade (Solanum nigrum). -*miʃ ḥa-tgiib id-diib min deel-u* ≈ what you're doing is no big deal (said in disparagement of s.o.'s efforts). **2** wolf. *ʕin ʕiʃt¹ naʕga takl-ak id-diyaaba [prov]* (if you live the life of a sheep, you'll be devoured by wolves) ≈ the weak must perish.
دياب *diyaab: diyaab ibn¹ ɣaanim* the enemy of the folk hero Abu Zayd.

د ى ب ز -
ديابزون *dayabzoon* <Fr *diapason*> /n pl *-aat*/ pitch-pipe.

د ى ث see د ى س

د ى خ see د و خ

د ى د ب - see د د ب ا ن: *didabaan*

د ى ر ¹
دير *deer* /n pl *ʕadyira, diyíra, ʕadyura, duyúra*/ monastery, convent.
ديّارة *dayyaara²* /n/ monastic community.

د ى ر ² see د و ر: *daayir, dayra, dayri, dayyaara¹, dayyar, ʕitdayyar, mustadiir*

د ى ز ¹)
ديز *diiz¹* /n/ *[bot]* type of tall grass (Scirpus tuberosus).
ديز *diiz²* <T *diz*>: *ʕirkaʕ diiz* kneel down.

د ى ز ² see د ى ى ز: *diyeez*

د ى ز ل
ديزل *diizil* <Engl> /n/ **1** /pl *-aat*/ diesel engine. *ʕalaat diizil* diesel engines. **2** /no pl/ diesel oil.

د ى س
ديّوس *dayyuus* /n/ wittol.

د ى ف ر -
دايافرام *diyafraam* <Engl> /n pl *-aat*/ contraceptive diaphragm.

د ى ق
ضاق *daaq²* *(i)* /vi/ to become narrow, close in. *ʕil-villa btaʕt-i daaqit ʕalayya* my villa became (too) cramped

for me. *daaqit biyya l-ħaala* I was in straitened circumstances. ‖*daaqit id-dinya f-wiff-i* I have exhausted all possibilities. -*sidr-u daaq* he lost patience. -*ma daaqit ʕilla ma ftaragit* (or *furgit*) *[prov]* ≈ things get worse before they get better. -vn *diiq, dayaqaan*; ava *daayiq*.

ضيقة *diiqa* /n pl -*aat*/ (financial) strait, (financial) crisis. *xud il-qirʕeen dool fukk' diqt-ak biihum* take this money and ease your indigence with it.

ضيّق *dayyaq*[1] /adj */ narrow, tight. *ʃawaariɛ dayyaqa* narrow streets. ‖*bi-riiħ dayyaq [naut]* close-hauled. -*muxx-a-ha dayyaq* she is narrow-minded. -*raagil xulq-u dayyaq* an impatient man. -*qurt-u dayyaqa* he's dim-witted. -*rizq-u dayyaq* he has a hard time earning a living, he's unfortunate. -*ɛad-dayyaq* on a small scale, as in *ɛuzuuma ɛad-dayyaq* a small party.

أضيق *ʕadyaq* /el/ narrower/narrowest, tighter/tightest.

ضيّق *dayyaq*[2] /vt/ to make narrow(er) or tight(er). *ʕil-ɛimaara l-gidiida dayyaqit if-faariɛ* the new building made the street narrow. ‖*dayyaq riiħ-ak [naut]* haul close to the wind! -*dayyaq il-xinaaq ɛala* to harass. -*dayyaqt' ʕaxlaaq-i* you've exhausted my patience! -*ʕinta ħa-tdayyaq id-dunya leeh* why are you being so obstructive? -vn *tadyiiq*; ava/pva *midayyaq*.

¶ *dayyaq ɛala* (1) to put in a tight corner, put pressure on, as in *ʕiz-ʒaabiţ qaɛad yidayyaq ɛalee li-ʏaayit ma ɛtaraf* the (police) officer kept pressurizing him until he confessed. (2) to be mean, miserly or stingy with, as in *goz-ha mdayyaq ɛaleeha f-kull[a] ħaaga nifs-a-ha fiiha* her husband is depriving her of everything she desires.

اتضيّق *ʕitdayyaq* or *ʕiddayyaq* /vi/ be made narrower. -iva *mitdayyaq*.

ضايق *daayiq* /vt/ to annoy, harass. *lamma tirkab il-ʕutubiis ma-tdayiq-ʃ ir-rukkaab* when you ride the bus don't irritate the passengers. -vn *midayqa*; ava *midaayiq*.

اتضايق *ʕitdaayiq* or *ʕiddaayiq* /vi/ to become annoyed, get fed up. *ma-titdayiq-ʃ' minni* don't get annoyed with me. -ava *mitdaayiq*.

استضيق *ʕistadyaq* /vt/ **1** to select for narrowness or tightness. **2** to consider (too) narrow or tight. *ʕistadyaqit ʕakmaam il-fustaan* she thought that the sleeves of the dress were too tight. -vn *ʕistidyaaq*; ava *mistadyaq*.

[1] د ى ك

ديك *diik*[2] /n pl *diyuuk*/ **1** cock, rooster. *diik ruumi* turkey cock. *ʕin naţaq id-diik fukuk ʕaddii-k* only if the cock speaks will I sell to you on credit (no-credit notice). *ʕid-diik il-faṣiiħ fil-beeda yṣiiħ [prov]* ≈ talent shows itself early. ‖*diik il-baraabir* the only son of a family with many daughters. -*diik id-diweeka* ≈ cock of the walk. **2** bantam-weight (in boxing).

ديكي *diiki: suɛaal diiki* whooping cough.

ديّك *dayyik* /vi/ to become pompous, become starchy. -vn *tadyiik*; ava *midayyik*.

استديك *ʕistadyik* /vt/ **1a** to consider virile. **1b** to select for virility. **2** to consider pompous and bossy. — /vi/ **3** to behave in a pompous and overbearing manner. -ava *mistadyik*.

[2] د ى ك

ديك *diik*[3] /n/ euphemism for *diin* in abusive remarks. *yilɛan diik-ak* go to heck!

[3] د ى ك see **د ا ك**: *diik*[1]

[1] د ى ل

ديل، ذيل *deel* /n pl *diyuul*/ **1** tail. ‖*deel ħuṣaan* pony tail (hairstyle). -*mabrad deel il-faar* rat-tail file. -*deel il-kalb' ma yinɛidil wi-law ɛallaqu fii qaalib [prov]* (a dog's tail won't come straight even if they hang a brick on it) ≈ a leopard cannot change his spots. -*hiyya mqaṭṭaɛa s-samaka w-del-ha* ≈ her outrageous behaviour knows no bounds. -*fid-deel* bringing up the rear. -*nigma ʕumm' deel* comet. **2a** hem, bottom edge (of a garment). ‖*ħaṭṭ' deel-u fi-snaan-u* he took to his heels. -*ʕil-wad-da deel ʕumm-u* that lad is tied to his mother's apron strings. **2b** train (of a skirt).

ديّل *dayyil* /vt/ to move to or leave at the rear. *ʕikminnu ţawiil dayyiluu fi-ʕaaxir il-faṣl* they moved him to the back of the class because he was tall. -vn *tadyiil*; ava *midayyil*.

اتديّل *ʕitdayyil* or *ʕiddayyil* /vi/ to moved to the rear, to be left at the rear. -iva *mitdayyil*.

[2] د ى ل

ديلة *diila: ħilt-i w-dilt-i* the only property I have.

د ى ل ى ن

ديولين *diyuliin* /n/ type of synthetic fibre, made into a wash-and-wear fabric.

د ى م see **د و م**: *yidiim, daayim, dayman*

د ى م ت ر

ديامتر *diyamitr, dayamitr* <Fr> /n pl -*aat*/ diameter.

[1] د ى ن

دان *daan*[1] *(i)* /vt/ to have (s.o.) in one's debt (financial-

ly). *ʕana dayn-u b-ɛafara gneeh* he owes me ten pounds. *ʕilli dayin-ni b-malliim yiigi yaxd-u* whoever I owe a millime to can come and get it. - vn *deen*; ava *daayin*; pva *madyuun*.

دين *dayan (i) = daan*. - vn *deen, dayanaan*; ava *daayin*; pva *madyuun*.

دين *deen* /n pl *diyuun*/ debt. *ʕana ṣaaḥib deen ɛaleek* you are in debt to me. ‖*bi-yiʃtiri bid-deen* he buys on credit. - *kull-u salaf wi-deen [prov]* ≈ nothing ever goes unrewarded or unpunished, justice is always done in the end.

داين *daayin*[1] **1** /n */ creditor. **2** /adj/ *[bank]* in credit (of an account).

مديونيّة *madyuniyya* /n pl *-aat*/ debt, indebtedness.

ديّانه *dayyaana* /pl n/ creditors.

مدين *madiin* **1** /n */ debtor. **2** /adj/ *[bank]* overdrawn (of an account).

اتدان *ʕitdaan* or *ʕiddaan* /vi/ to fall into debt. *ʕiz-zaman xallaa-ni tdant-i-lu* circumstances caused me to fall into debt to him. - ava *mitdaan*.

اندان *ʕindaan = ʕitdaan*. - ava *mindaan*.

اتدين *ʕitdayan* or *ʕiddayan = ʕitdaan*. - ava *mitdiyin*.

اندين *ʕindayan = ʕitdaan*. - ava *mindiyin*.

داين *daayan, daayin*[2] /vt/ to borrow from (s.o.), buy from (s.o.) on credit. *ma-xallaa-ʃ ḥadd*[i] *ma-dayn-uu-ʃ* he borrowed from absolutely everyone. *da-na mdaayin il-baqqaal wig-gazzaar wi-btaaɛ il-firaax* but I owe money to the grocer, the butcher and the chicken man. - vn *midayna*; ava *midaayin*.

اتداين *ʕitdaayan* or *ʕiddaayan, ʕitdaayin* or *ʕiddaayin* /vi/ to borrow money from each other. *lamma n-naas tiṯḥiwig lil-fuluus titdaayin min baɛḍ-a-ha* when people are short of money they borrow from one another. ‖*ʕana b-addaayan min ʕideen in-naas* I have no money of my own. - ava *mitdaayin*.

استدان *ʕistadaan, ʕistidaan* /vi/ to borrow, get into debt. *ɛumr-i m-astidiin* I never borrow money. - vn *ʕistidaana*; ava *mistidiin*.

د ی ن [2]

دين *diin* **1** /n pl *ʕadyaan*/ religion. *ʕid-diin il-ʕislaami* the Islamic religion. *wi-diin-i* by my faith! (a strong oath). ‖*ya diin-i ɛala kida* how very nice! - *ya diin in-nabi* wild exclamation of astonishment. - *ya diin ik-kalb* ≈ you bloody bastard! - *yilɛan diin-ak* ≈ God damn you! - *ḥ-aṭallaɛ diin-ak* ≈ I'll beat hell out of you, I'll give you hell. - *ʕin-naas ɛala diin muluk-hum [prov]* ≈ people follow the example of their leaders. - *ʕig-gawaaz nuṣṣ id-diin* to marry is to fulfil half of one's religious obligations. *naweet ʕakammil nuṣṣ*[i] *diin-i* I decided to get married. **2** /intensifying element/ *huwwa ṭaaliɛ diin ʕaymaan ʕahl-u fiʃ-ʃuɣl* he's working fit to bust a gut. *ḥittit diin ṭabaq dandurma* an absolutely super dish of ice cream. ‖*li-ʕabu diin(-u)* to the furthest limit, to the extreme, to the full.

ديني *diini* /adj/ religious. *lagnit if-ʃuʕuun id-diniyya* the Committee for Religious Affairs.

ديانة *diyaana* /n pl *-aat*/ religion, confession, sect.

اتديّن *ʕitdayyin* or *ʕiddayyin* /vi/ to become religious, become pious, make a show of being religious. - ava *mitdayyin, mutadayyin*.

د ی ن [3]

دان *daan*[2] *(i)* /vt/ to convict. *danít-u ʕil-maḥkama* the court convicted him.

ديّان *dayyaan* /n/ Judge (epithet of God).

دينونة *daynuuna* /n/ Judgement. *yoom id-daynuuna* the Day of Judgement. *ʕid-daynuuna l-ɛuẓma* the Last Judgement.

أدان *ʔadaan*[2] *= daan*[2]. - vn *ʕidaana*; ava *mudiin*; pva *mudaan*.

د ی و ل

دياولو *diyawlu* <It *diavolo*>: *wala diyawlu* nothing (else) whatsoever, as in *wala nigiḥ wala diyawlu* he didn't succeed or come anywhere near it.

د ی ی [1]

دية *diyya* /n pl *-aat*/ ransom. ‖*ma-luu-ʃ diyya* (1) he is of no significance, he is worthless (2) he is an outlaw. - *ʕilli tiɛraf diyyit-u ʕiqtil-u [prov]* ≈ when you know the consequence of a deed, go ahead and act decisively.

د ی ی [2]

see ا د ی : *diyya, diyyat, diyyak, diyyan*

د ی ی [3]

see [2] د و ی : *dayy*

د ی ی ز

دياز *diyeez* <Fr *dièse*> /n pl *-aat*/ *[mus]* sharp.

ذ

زكى[2] see ذكو

زا see ذلك

زلل[3] see ذلل

زمر[2] see ذمر

زمم[2] see ذمم

زنب[2] and دنب see ذنب

زهب[1] and دهب[2] see ذهب

زهل see ذهل

زهن see ذهن

زو see ذو

زات see ذوات

دوب[1] see ذوب

دود[2] see ذود

زوق[2] and دوق see ذوق

زو see ذى

دياكن see ذياكن

زيع see ذيع

ديل[1] see ذيل

زات see ذات

زال see ذال

دىب see ذءب

دبب[4] see ذبب

دبح[1] see ذبح

زبزب see ذبذب

دبل[3] see ذبل

دخر see ذخر

در see ذر

زرر[2] see ذرر

درع[2] see ذرع

درى[3] see ذرى

زعر[2] see ذعر

زعن see ذعن

زفر[1] see ذفر

دقن see ذقن

زكر[1] and دكر see ذكر

زكصل - see ذكصل -

ر

ر ا

را، راء *raa* /fem n/ tenth letter of the Arabic alphabet. - also *raaʕ, rih*.

ر ا ء

راء، راء *raaʕ* /fem n, pl *-aat*/ tenth letter of the Arabic alphabet. - also *raa, rih*.

ر ا ب ش

رابش *raabiʃ* <Engl *rubbish*> /coll n/ **1** *[obsol]* articles discarded by the British army and sold on the Egyptian market. *bi-yiʃtaɣal fir-raabiʃ* he works in the trade in army cast-offs. **2** any discarded articles.

ر ا ح see ر و ح : *raaḥ, raaḥa*

ر ا خ ر see ر ء خ : *raaxar*

ر ا س see ر ء س : *raas*

ر ا ش ن

راشن *raaʃin* <Engl> /n/ *[naut]* ration.

ر ا ق

راق *raaq*[1] /n pl *raqaat*/ layer. *niruṣṣ[i] fiṣ-ṣaniyya raaq laḥma w-raaq ruqaaq* we put a layer of meat and a layer of *ruqaaq* in the baking dish. ‖*xadit minnu raqaat* it wore him out.

راقة *raaqa* = *raaq*.

ر ا ك ت

راكت *raakit* <Fr *raquette*> /n/ paddle-ball.

ر ا م

رامة *raama: ʃibn[i] raama* epithet of the Prophet Muhammad.

[1] (ر ا ى)

راى *raay*[1] <Copt> /n/ Alestes dentex, Alestes batemose, a type of Nile fish.

راى *raay*[2] /n/ *[zool]* ray, skate.

[2] ر ا ى see ر ء ى : *raaya*

ر ا ى ش

رايش *raayiʃ* /n/ **1** burr (on metal), ragged edge (to a piece of material). **2** metal filings or shavings (especially as impurities, e.g., within the working parts of a mechanism).

ر ء

رئة *riʃa* /n pl *-aat*/ lung. *saraṭaan ir-riʃa* lung cancer.

رئوى *riʃawi* /adj/ pulmonary. *ʃiltihaab riʃawi* pneumonia.

ر ء س

رأس *raʃas↑ (a, u)* /vt/ **1** to head, be head of. *huwwa b-yirʃas il-farraʃiin* he is in charge of the office servants. **2** to preside over. *raʃas l-igtimaaɛ* he chaired the meeting. - vn *riyaasa, riʃaasa↑*; pva *marʃuus*.

رياسة، رئاسه *riyaasa, riʃaasa↑* /n/ leadership, chairmanship, presidency. *bi-yitlammu l-fuqaha maɛa baɛḍii-hum bi-ryaasit fex-hum* the Koran reciters gather under the leadership of their sheikh. *ʃil-markib taḥt[i] ryast-i* the ship is under my command.

مرؤوس *marʃuus* /n */ subordinate.

رأس، راس *raas, raʃs↑* /fem n, pl *ruus, ruʃuus↑*/ **1** head (of a person or animal). *masnad raas* head rest. *raas ḍaani* (1) a sheep's head (for eating). (2) stupid person, muttonhead. *ʃiɣsil raas-ak* wash your hair! *raas*

baruuka wig-stand. ‖*raas bi-raas* on an equal footing, as in *ħa-niftaɤal raas bi-raas* we shall work as equal partners, *bi-tiɛmil ras-ha b-raas-i* she behaves as though she's my equal, she confronts and defies me. -*raaħ raas fi-raas* to faint. -*raas-u w-ʕalf' seef* (or *barṭuuʃa [abus]* or *wi-baraṭiif il-balad [abus]*) ≈ wild horses could not make him (do something), as in *raas-u w-ʕalf' seef ma-ybiɛ-haa-ʃ naaqiṣ ɛan kida* he absolutely refuses to sell it any cheaper. -*lamma yuqaɛ l-faas fir-raas* ≈ at the point of no return. -*raas-u fis-sama* he is proud. -*min is-saas lir-raas* from head to toe, from top to bottom. -*xalla ras-na ɛalya l-fooq* he made us proud of him. -*xalla ras-na miṭaṭiyya* he made us ashamed of him. -*fooq raas* born (immediately) after, as in *hiyya fooq raas-i ɛala ṭuul* she is the next oldest in the family after me, *bi-tgiib ʕawlaad fooq raas baɛd* she has children one after the other. -*raas-i bi-tliff* I am dizzy, I am in a spin. -*baɛd' raas-i ma ħadd" ɛaaf* after me, the deluge. -*raas il-ɛabd* long-handled ceiling brush. -*ɛala raas-u riiʃa [sarc]* he's a big-shot. -*maaʃi ɛala raas-u* he is living irresponsibly. -*min taħt' raas* attributable to (of fault, blame etc.), as in *kull illi ħaṣal min taħt' raas-ak* all that happened is your fault. -*min raas li-rigl* totally, as in *ʕinta ɤalṭaan min raas-ak li-riglee-k* you're completely wrong. -*miʃ ɛaarif raas-u min riglee* ≈ he doesn't know whether he's coming or going. -*ɛala ɛeen-i w-raas-i* or *ɛala raas-i min fooq* certainly, with pleasure. -*maṭraħ ma tḥuṭṭ' raas-ak ħuṭṭ' rigl-ak* ≈ do your worst (you don't scare me)! -*raas ɤanam* one of a herd of sheep and goats. -*ʕabu raas* one suffering from ringworm. -*ʕabu r-ruus* epithet for one with a large head. **2** top part or business end. *raas kursi* the top (of the back) of a chair. *raas ħarba* spearhead. *raas ʃakuuf* head of a hammer. *raas musmaar* head of a nail. *raas siriir* head of a bed. *ɛala raas ħarit-na* at the top of our alley. *raas toom* a head of garlic. ‖*raas sukkar* sugar loaf. -*raas xaṣṣ* stem of a lettuce. -*raas ħagar* breakwater. **3** beginning, starting point. *bi-yɛidd is-sibħa min ras-ha* he counts the prayer beads from the beginning. *raas is-sana* New Year's day. **4** top (of a hierarchy). *ʕil-ʕidaara ɛala ras-ha l-ɛamiid* the administration is headed by the dean. *raas manṣar [obsol]* leader of a band of thieves. **5** heading, title. *katabt' raas il-mawḍuuɛ ɛaṣ-ṣabbuura* I wrote the title of the topic on the blackboard. **6** leading personality. *hiyya ʕakbar raas fil-ħitta* she's the most influential person in the neighbourhood. **7** cape, promontory. *raas il-barr* Ras el-Barr, promontory and resort to the west of the eastern estuary of the Nile. *raas it-tiin* Ras et-Tin, promontory at Alexandria, site of a former royal summer palace. **8** *[carp]* rail. *raas baab* rail of a door. **9** headband (of a bridle). **10** boom (of a crane). see further under ر و س ¹

¶ *raʃsan↑* /adv/ directly, immediately.

رأسي *raʃsi↑* /adj/ vertical.

روسيّة *rusiyya* /n pl *-aat*/ blow delivered with the forehead (against the forehead of another). *ḍarab-u* (or *ʃiddaa-lu) rusiyya* (or *bir-rusiyya*) he butted him with his head.

رئيس *raʃiis↑* /n pl *ruʃasa, ruʃasaaʃ*/ chief person, head, leader. *raʃiis fariiq* team captain. *raʃiis qism* department head. *raʃiis maglis il-ʕidaara* the chairman of the board. *raʃiis wuzara* Prime Minister. *raʃiis iggumhuriyya* the President of the Republic.

رئيسي *raʃiisi* /adj */ principal, main. *ʕil-bayanaat ir-raʃisiyya* the most important items of information. *maktab raʃiisi* main office. *ṭariiq raʃiisi* main road. ‖*ɛinwaan raʃiisi* headline (in a newspaper).

ريّس *rayyis* /n pl *ruyasa*/ **1** man in charge of a group of workers, foreman, boss, chief. **2** captain of a boat. ‖*ɛuqdit ir-rayyis [naut]* boatswain's hitch. **3a** title of, and form of address or reference to, (1) any male not wearing military or religious dress or smart western clothes. (2) a waiter and any male who may be referred to as *ʃuṣṭa* (q.v.). **3b** *ʃir-rayyis* informal title of, and form of address or reference to, the President of Egypt.

ريّسة *rayyisa* /n pl *-aat*/ woman in charge of a group of workers, forewoman.

اتريّس *ʃitrayyis* /vi/ to be in charge (of a group of workers). -ava *mitrayyis*.

ر ء س م ل see ر س م ل: *raʃsimaal, raʃsimaali, raʃsimaliyya*

ر أ ف

رأف *raʃaf (a)* /vi/ to be compassionate, show mercy. -vn *raʃfa, raʃafaan*; ava *raaʃif*.

رأفة *raʃfa* /n/ compassion, mercy. *ʃir-raʃfa bil-ħayawanaat* kindness to animals. ‖*lagnit ir-raʃfa [acad]* university committee that gives the final ruling on borderline or just below borderline examination papers.

رؤوف *raʃuuf* /n/ Gracious One (epithet of God).

ر ء م see ر ي م ¹

ر ء و see ر ء: *riʃawi*

ر ء ي see also ر و ي ¹

رأى *raʃa (yara)* /vt/ **1** to see in a dream or vision. *raʃeet*

ʕabuu-ya laabis ʕabyaḍ f-abyaḍ I dreamt that I saw my father dressed all in white. **2** *[frozen contexts]* to see, behold. *la ʃuft-u wala ɛeen-i raʃit-u* I didn't see hair nor hide of him. **3**↑ to see (s.th.) as best, consider (s.th.) right. *ʕilli taraa ʕiɛmil-u* do whatever you think best. - vn *raʃy, ruʃya*; pva *marʃi*.

¶ *ya tara* or *ya hal tara* I wonder. *ma-gaa-ʃ leeh ya tara* I wonder why he didn't come.

رأى *raʃy* /n pl *ʕaraaʃ*/ opinion, view. *ʕir-raʃy il-ɛaamm* public opinion. *raʃy[i] qanuuni* legal opinion. *ʕana raʃy-i niɛmil qurɛa* I think we should draw lots. *bi-ymaʃʃi raʃy-u ɛaleena* he forces his opinion upon us ‖*ɛala raʃy* according to the view of, according to the saying of, as in *ɛala raʃy-ak illi yisraq maɛruuf ʕâmr-u* as you say, it's well known what happens to those who steal, *ɛala raʃy il-masal* as the proverb says. - *ʕana min raʃy-ak* or *raʃy-i min raʃy-ak* I share your opinion. - *ʕeeh raʃy-ak ʕinn* ... (1) what do you say to the fact that ...? as in *ʕeeh raʃy-ak ʕinnak ma-tifham-ʃ ḥaaga* (1) what would you say if I told you that you don't understand a thing? (2) can you credit that ..., just imagine that ...? (sometimes used defiantly), as in *ʕeeh raʃy-ak ʕinni ma-tɛaʃʃet-ʃ[i] lissa* can you imagine? I haven't had supper yet. - *lu raʃy[i] gamiil* he comes up with good ideas.

رؤية *ruʃya[1]* /n/ **1** seeing, sighting. *ʕiḥna fi-ntiẓaar ruʃyaa-k* we're looking forward to seeing you. **2** *[Isl]* sighting of the new moon, which marks the first day of a month. *sabatit ir-ruʃya* the sighting (of the new moon) was confirmed.

مرئى *marʃi*↑, *marʃi* /adj/ visual. *ʕil-funuun il-marʃiyya* the visual arts.

راية *raaya* /n pl *-aat*/ pennant, small flag.

رؤيا *ruʃya[2]* /n/ vision, dream. *ʃaaf ruʃya wiḥʃa (fil-manaam)* he had a bad dream. ‖*sifr ir-ruʃya [Chr]* Book of Revelation, Apocalypse.

مراية *miraaya* /n pl *-aat*/ **1** mirror. ‖*ʃil-wiʃʃ[i] mraaya w-ʃil-qafa sillaaya [prov]* (a mirror to the face and a thorn to the back of the neck) ≈ he is pleasant with you to your face, but stabs you in the back. - *miraayit il-ḥubb[a] ɛamya [prov]* ≈ love is blind. - *miraaya siḥriyya* kaleidoscope. **2** opening in the floor of a baker's oven through which the heat enters from the fire-chamber. **3** backboard (e.g., of a boat or a cart). **4** area on the neck of an *ɛuud* where the fingers stop the strings (see Pl.J, 10).

اتراءى *ʕitraaʃa* /vi/ it occurred (to one's mind). *ʕiɛmil ka-ma yitraaʃa liik* do as you think (best). - ava *mitraaʃi*.

ارتأى *ʕirtaʃa* /vt/ to consider right or suitable. - ava *mirtiʃi*.

ر ب ا see ر ب و : *riba*

ر ب ب [1]

ربّ *rabb[1]* /n/ **1** Lord God. ‖*ya rabb* O Lord (protect us)! (expression of dismay, anxiety or resignation). - *ɛuul ya rabb* ≈ rely on God! - *ya rabb[i] yingaḥ* ≈ I hope to God he succeeds. - *rabb[i] hina rabb[i] hnaak* (the God of here is the God of there) all places are as good as each other. - *raagil bitaaɛ* (or *bi-yiɛraf) rabb-i-na* a pious man. - *ʕil-ḥikaaya di btaaɛit rabb-i-na* the matter is in God's hands, there is nothing any man can do about it. - *rabb-ak rabb[i] quluub* the Lord looks on the heart. - *liina rabb ism-u l-kariim* we have a Lord whose name is the Generous One (expression of despair or helplessness or, addressed to another, of consolation). **2** /pl *ʕarbaab*/ master. *rabb il-beet* (1) the Lord of the Kaaba, i.e. God. (2) the master of the house. *ʕarbaab iṭ-ṭariiqa* the leaders of the Order. ‖ *ʕarbaab il-ʕaḥwaal* Sufis with hidden spiritual powers. - *ya ʕarbaab kull[i] mṣiiba* you trouble-makers! **3** *ʕarbaab* /pl n in constr state/ the ones with. *ʕarbaab is-sawaabiq* those with previous convictions. *ʕarbaab il-ḥiraf* craftsmen, skilled workmen. *ʕarbaab il-maɛaʃaat* pensioners.

ربّة *rabba[1]*↑ /n pl *-aat*/ mistress. *rabbit beet* housewife. *rabbit il-beet* the mistress of the house.

ربّاني *rabbaani* **1** /adj/ pertaining to the Lord God. *ʕiṣ-ṣala r-rabbaniyya [Chr]* the Lord's Prayer. *raagil rabbaani* a pious man. **2** /adj invar/ God given, inscrutable. *ḥalaawa rabbaani* natural beauty. - /adverbially/ *ʕil-ḥikaaya di ḥaṣalit rabbaani* this affair came about for no apparent reason.

ر ب ب [2]

ربّ *rabb[2] (u)* /vt/ to beat (s.th.) of liquid consistency. - vn *rabb, rababaan*; ava *raabib*; pva *marbuub*.

ربّ *rubb* /n pl *rubuub*/ thickened fruit juice, fruit purée. ‖*rubb[i] suus* liquorice sweets or pastilles.

مربّى *marabba* /n pl *-aat*/ jam. *marabbit naring* orange marmalade.

اترببّ *ʕitrabb* /vi/ to be beaten. - iva *mitrabb*.

انربّ *ʕinrabb* = *ʕitrabb*. - iva *minrabb*.

ر ب ب [3]

ربابة *rabaaba, ribaaba* /n pl *-aat*/ musical instrument with one or two strings, with a small resonance box

usually made of coconut, held vertically and played with a bow, rebab (see Pl.J, 1). *ʃaaɛir ir-rabaaba* singer who accompanies himself on the *rabaaba*. ‖*maaʃi b-rabaaba* he is telling the news to all and sundry.

رباب *rabaab, ribaab* /n/ collective of *rabaaba, ribaaba*.

رَبّاب *rabbaab, rabbaab* /n pl *rabbaaba, rabbaaba, rabbabiin*/ player of the *rabaaba*.

ر ب ب [4]

رِبّة *ribba* /n/ *[agric]* **1** that part of the clover crop left to produce seed (and not cut for fodder). **2** /pl *ribab*/ crop or field of clover grown for seed.

ر ب بِ [5]

ربما *rubbama* (also *rubbatan*↓) /adv/ perhaps, possibly. *huwwa rubbama ykuun taɛbaan* perhaps he's sick. *rubbama nisyu* maybe they forgot.

ر ب ب س -

ربّسوس *rubbisuus* /coll n/ liquorice sweet(s) or pastille(s).

ر ب ب ك -

روبابكيا *rubabikya, rubabikya* <It *roba vecchia*> /n/ cast-off household articles, junk. *bitaaɛ rubabikya* rag-and-bone man, junk peddler.

ر ب ب ي ت

ربّيتا *rubbeeta* /n/ *[Chr]* guest master in a monastery.

ر ب ح

ربح *ribiḥ*↑, *rabaḥ*↑ *(a)* **1** /vt/ to make (a profit). *ribiḥt' fluus kitiir* I made a large profit. *rabaḥ il-biriimu* he won the first prize. **2** /vi/ to make a profit. *ʃid-dukkaan ribiḥ ɢawi* the shop did very well. *ʃilaah-i ma-tirbaḥ [women]* may you never prosper! - vn *ribḥ*; ava *raabiḥ, rabḥaan*.

ربح *ribḥ* /n pl *ʃarbaaḥ*/ **1** profit. *bi-yṭallaɛ filuus bir-ribḥ*↓ *[Isl]* he practises usury. **2** *ʃarbaaḥ* /pl n/ **2a** dividends paid on shares. **2b** dividends paid to workers in a public sector company from the profits of that company.

ربحيّة *ribḥiyya* /n/ profitability.

أربح *ʃarbaḥ* /el/ more/most profitable.

رباح *rabaaḥ: ʃiṣ-ṣabaaḥ rabaaḥ* ≈ let's sleep on it, tomorrow will be a better time (to consider the matter).

مربح *murbiḥ*↑ /adj/ lucrative, highly profitable.

ربّح *rabbaḥ* **1** /vt/ to cause to make profit. *ʃarabbaḥ-ak fil-beet ʃalf' gneeh* I give you one thousand pounds' profit for the house. **2** /vi/ to lend money for profit. - ava *mirabbaḥ*.

استربح *ʃistarbaḥ* /vt/ to try to gain. *laazim tistarbaḥ riḍa ʃabuu-k* you must try to gain your father's favour. - vn *ʃistirbaaḥ*; ava *mistarbaḥ*.

ر ب ر ب

ربرب *rabrab* /vi/ to become plump, fill out. - vn *rabraba*; ava *mirabrab*.

ربريب *rubreeb* /n/ soft mud, mire.

ربريبة *rubreeba* /n/ pool or puddle of mud.

ر ب ر ت -

ريبورتاج *riburtaaj* <Fr> /n pl *-aat*/ reportage, news coverage.

ر ب س

ريبس *ribs* <Engl> /n/ *[text]* rep.

ر ب ش [1]

ربش *rabaʃ* <Engl *rubbish*>: *naas rabaʃ* worthless people, rabble, riff-raff.

ر ب ش [2] see ر ا ب ش : *raabiʃ*

ر ب ص

رابص *raabiṣ* /adj */ lying in wait, on the look-out.

اتربّص *ʃitrabbaṣ* /vi/ to be in wait, watch out (for s.o.). *bi-ytrabbaṣu l-ʃayy' waaḥid gayy' min ir-riif* they are on the look-out for anyone coming from the countryside. *gariimit it-tarabbuṣ* the criminal act of ambush. - vn *tarabbuṣ*; ava *mitrabbaṣ*.

ر ب ط

ربط *rabaṭ (u)* /vt/ **1a** to fasten, tie. *rabaṭ karafattiit-u* he tied his tie. *rabaṭt' ḥzaam-i* I fastened my belt. ‖*yiḥill' w-yurbuṭ* to exercise power, act effectively and decisively, as in *la yḥill' wala yurbuṭ* (he) is useless, (he) is ineffective. *ʃana miʃ ɢayz-u la yḥill' wala yurbuṭ fil-ɢamaliyya* I don't want him to have anything to do with the business. **1b** to make fast, hitch, moor. *ʃilli ma-yurbuṭ bihimt-u tinsiriɢ minnu [prov]* he who doesn't tie up his beast gets it stolen. *ʃil-malayka wig-ginn' marbuṭin biz-zikr* the angels and jinn are held powerless by the dhikr. ‖*ɢuɢda rabṭ [naut]* link-tightening hitch. - *lanf' rubaaṭ [naut]* boat that carries the mooring cable from a ship to the quay. **1c** to bind, tie up, bundle. *ʃurbuṭ iṭ-ṭard* tie up the parcel! **1d** to bandage. *rabaṭit-lu g-garḥ* she bandaged his wound.

2 to screw tight. *ʔurbuṭ il-faraamil* tighten the brakes! **3** to occupy, keep busy. *ma-ɋdirtʲ-ʃ ʔagii-lak ɛafaan iẓ-ẓuruuf rabaṭit-ni* I couldn't come to you because things kept me. **4** to determine, fix, specify. *rabaṭu ʃ-ʃuruuṭ* they agreed on the conditions. ‖*rabṭʲ kalaam* (or *lisaan* or *beeɛa* or *ʔittifaaɋ*) paying of an earnest or deposit to seal a deal. - *ʔiḍ-ḍabṭʲ wir-rabṭ* discipline. **5** to cause impotence in (e.g., a bridegroom) by magic. — /vi/ **6** to be fastenable, be attachable. *ʔil-musmaar da b-yurbuṭ fooɋ* that screw goes on top. **7** to make a connection, see a relationship. *bi-yurbuṭ been il-maɛlumaat ɛafaan yifham il-mawɋif* he relates all the information in order to understand the situation. *ʔiʃ-faɛb il-maṣri b-yurbuṭ been il-farah wil-bayaaɋ* Egyptians associate white with festivity. **8** to come to a dead halt, stop completely. *ʔurbuṭ ɛandak* stop right where you are! *yiftaval ṭuul in-nahaar wi-yiigi s-saaɛa xamsa w-yurbuṭ* he works all day and then, when it gets to five o'clock, he downs tools. **9** to lie in ambush. *rabaṭuu-lu fil-ɋaṣab* they lay in ambush for him in the sugar cane. - vn *rabṭ, rubaaṭ, rabaṭaan*; ava *raabiṭ*; pva *marbuuṭ*.

ربطة *rabṭa*[1] /n pl *-aat*/ **1** /inst n/ a tying, a binding, a fastening. — /also pl *rubaṭ*/ **2** bunch, bundle. *niɋlaɛ iʃ-ʃatlʲ wi-nrabbaṭ-u rubaṭ* we pull up the seedlings and tie them in bundles. ‖*bi-rabṭit il-miɛallim* including every single one, as in *xad-hum il-buliis bi-rabṭit il-miɛallim* the police took them all in. **3** knot. *rabaṭit rabṭa fil-ḥabl* she tied a knot in the rope. ‖*wisaam rabṭit is-saaq* the Order of the Garter.

رباط *rubaaṭ* /n pl *-aat, ʔarbiṭa, ribíṭa*/ **1** tie, tie-string. *gazma b-rubaaṭ* lace-up shoes. *rubaaṭ is-sitaara* curtain sash, tie-back. **2** bandage. **3** brake. **4** *[naut]* strake. **5** spell to induce impotence. **6** bond. *rubaaṭ muqaddas [Chr]* a holy bond (i.e. marriage).

رابطة *rabṭa*[2] /n pl *rawaabiṭ*/ **1** bond. *wilad-na humma r-rabṭa benatna* our children are the bond between us. **2a** social or academic association. *rabṭit ʔabnaaʔ ɋina* Sons of Qena Association (a club for those from Qena living in Cairo). **2b** guild, union. *ʔir-rawaabiṭ il-ɛummaliyya* the labour unions.

مربوط *marbuuṭ* /n/: *marbuuṭ id-daraga [admin]* salary bracket.

رُبّاطيّة *rubbaṭiyya* /n/ gang. *ɛamalu rubbaṭiyya ɛalayya* they ganged up on me.

مربط *marbaṭ* /n pl *maraabiṭ*/ hitching place for livestock, stable. ‖*marbaṭ il-faras* the heart of the matter, as in *ʔahu gibtʲ marbaṭ il-faras* you've hit the nail right on the head!

اترابط *ʔitrabaṭ* /vi/ passive of *rabaṭ*. - iva *mitribiṭ*.

انربط *ʔinrabaṭ* = *ʔitrabaṭ*. - iva *minribiṭ*.

ربّط *rabbaṭ* /vt/ to tie, fasten, bind etc. (a number of things, or a number of times in succession). *bi-nrabbaṭ it-tiil ḥizam* we tie up the hemp in bundles. *ʔil-muuna bi-trabbaṭ il-madamiik* the mortar binds the courses. *tarbiiṭ ɛarabiyya* the checking and tightening of loose screws and bolts on a car. - vn *tarbiiṭ*; ava/pva *mirabbaṭ*.

اتربّط *ʔitrabbaṭ* /vi/ **1** to be tied, be fastened, be bound etc. (of a number of things, or a number of times in succession). **2** to lie in wait. - ava/iva *mitrabbaṭ*.

رابط *raabiṭ* /vi/ to station oneself, take up one's stand, settle oneself in position. *rabiṭtᵃ ɛala baab ig-gaamiɛ* I stationed myself by the door of the mosque. *ʔig-geef miraabiṭ fi-siina* the army has taken up position in Sinai. *ḥa-tiɛmil ʔeeh bukra. - ʔaraabiṭ fil-beet* 'What are you going to do tomorrow?' 'Just hang about at home.' ‖*ʔig-geef il-muraabiṭ [obsol]* ≈ the territorial army. - vn *mirabṭa, muraabaṭa*↑; ava *miraabiṭ*.

ارتبط *ʔirtabaṭ*↑ /vi/ **1** to be linked, be connected, be related. *ʔil-mawḍuɛeen murtabṭiin bi-baɛḍ* the two matters are interlinked. **2** to enter an agreement, commit oneself. - vn *ʔirtibaaṭ*; ava *murtabiṭ*.

ارتباط *ʔirtibaaṭ* /n pl *-aat*/ **1** link, tie, connection, relation. *dimuuɛ-i ma-lkaa-ʃ irtibaaṭ big-gawaaz* my tears have nothing to do with marriage. **2** commitment. *ʔirtibaṭaat maliyya* financial commitments.

ر ب ع

ربع *rabaɛ (a, i)* /vi/ **1** to gallop (of a donkey). **2** *[joc]* to get going full-swing, get properly under way. - vn *rabɛ*; ava *raabiɛ*.

ربع *rabɛ* /n pl *ʔurbuɛ*/ *[obsol]* building divided into private apartments with a common courtyard for cooking etc. ‖*zayy ir-rabɛ* old and shabby (of a building). - *taḥt ir-rabɛ* historic district running west along the outside of the line of the Cairo city walls from Bab Zuweila.

ربعة *rabɛa* /n/ manuscript copy of the Koran in thirty volumes, usually kept in a box, and on which oaths are traditionally sworn in cases of serious dispute.

ربع *rubɛ* /n pl *ʔirbaaɛ, ʔirbaɛ*/ **1** one fourth, quarter. *rubɛʲ saaɛa* a quarter of an hour. *talatt irbaaɛ kiilu laḥma* three quarters of a kilo of meat. **2** one quarter of a *ḥizb* of the Koran. **3** *[mus]* quarter tone. **4** *[Chr]* four-line antiphonic verse from the liturgical hymns of the Coptic *tasbiḥa* (q.v.). **5a** unit of volume equal to four *ɋadaḥ* or half a *keela* (8.25 litres). **5b** vessel used to measure out one *rubɛ* of grain. **6** corner piece in tent

appliqué work (see Pl.H, 1).

ربعة *rubʕa* /n pl *-aat, -aat*/ unit of volume equal to one quarter of an *ʔadaḥ* (0.516 litres).

ربع *ribiʕ* /adj */ stocky, stout.

أربع *ʔarbaʕ*[1] /num: in constr w foll n pl; usu *ʔarbaʕt* when followed by n pl ordinarily w initial hamza/ four. *ʔif-faʔʔa ʔarbaʕ maṭaariḥ* it's a four-roomed flat. *ʔarbaʕt alaaf* four thousand. *ʔarbaʕt iʔlima* four pens. ‖*bi-ʔarbaʕ ʕeneen [joc]* (with four eyes) wearing glasses.

أربع، أربعاء *ʔarbaʕ*[2] (also *yoom ʔarbaʕ*) /n/ a Wednesday. *(yoom) il-ʔarbaʕ* (this) Wednesday. ‖*ʔarbaʕ ʔayyuub [Chr]* the Wednesday of Holy Week on which the sufferings of Job are commemorated.

أربعة *ʔarbaʕa* /num: in absol state, in apposition, or w foll n sing in contexts of ordering and itemizing; pl-*aat*/ four. *ʔarbaʕa w-ʔarbiʕiin sana* forty-four years. *ʔil-mazaahib il-ʔarbaʕa* the four Islamic schools of law. *ʔil-kutub di ʔarbaʕa* these books are four (in number). *ʔil-ʔiʔlima l-ʔarbaʕa* the four pens. *ʔarbaʕa kiilu* four kilos. ‖*ʔumm*[a] *ʔarbaʕa w-ʔarbiʕiin* (1) centipede. (2) a witch of a woman.

¶ *ʔarbaʕaat* /adv/ in fours.

رباعى *rubaaʕi* /adj/ **1** fourfold, quadripartite. **2** for four people. *ʔawaarib rubaʕiyya* four-man boats. — /n pl *rubaʕiyyaat*/ **3** *[mus]* quartet. **4** quatrain.

ربيع *rabiiʕ* /n/ **1** spring, springtime. ‖*rabiiʕ (il-)ʔawwal* the third month of the Muslim year. *rabiiʕ (it-)taani* the fourth month of the Muslim year. **2** *[rur]* clover grown as a main crop.

ربيعى *rabiiʕi* /adj/ spring-like (of weather). ‖*ramad rabiiʕi* inflammation of the eyes caused by an allergy to pollen etc., and occurring in the spring.

ربّاع *rabbaaʕ* /n */ weight-lifter.

مرعى *marbaʕ* /n pl *maraabiʕ*/ pasture, meadow.

أربعتاسر، أربعه عسر *ʔarbaʕtaaʔar* **1** /num pl *-aat*/ fourteen. ‖*ʔamar ʔarbaʕtaaʔar* (1) a full moon (being the state of the moon on the fourteenth night of a lunar month). (2) a dazzling beauty. **2** *ʔil-ʔarbaʕtaaʔar* /adj invar/ the fourteenth.

أربعين *ʔarbiʕiin* **1** /num pl *-aat*/ forty. — *ʔil-ʔarbiʕiin* **2** /adj invar/ the fortieth. **3** /n/ the fortieth day (1) after a death, when certain traditional ceremonies are performed in commemoration of the deceased. (2) after childbirth, when the mother ceases to be ritually impure. see further under ر ب ع ن

ربعمية، أربعمائة *rubʕumiyya* **1** /num pl *-aat*/ four hundred. **2** *ʔir-rubʕumiyya* /adj invar/ the four-hundredth.

رابع *raabiʕ*[1] /adj */ fourth. ‖*min raabiʕ il-mustaḥiil* (or *il-mustaḥilaat*) absolutely impossible.

مربوع *marbuuʕ* /adj */ **1** stocky, stout. **2** folded in four.

ربّع *rabbaʕ* /vt/ **1** to form (s.th.) into a square, give (s.th.) the shape of a square. **2a** to quadruple. *salaam mirabbaʕ* (1) a fourfold flourish (e.g., from a band at a wedding after each toast). (2) a pompous and effusive greeting. **2b** *[math]* to square (a numeral). *ʔitneen tarbiiʕ* two squared. *mitr' mrabbaʕ* a square metre. **3** to cross (the arms or legs). ‖*ʔaaʕid wi-mrabbaʕ riglee* he's sitting comfortably. — /vi/ **4** to eat clover. **5** to practise weight-lifting. - vn *tarbiiʕ*; ava/pva *mirabbaʕ*.

تربيع *tarbiiʕ* /n pl *tarabiiʕ*/ square.

تربيعة *tarbiiʕa* /n pl *tarabiiʕ*/ **1** square piece, e.g., in tent appliqué work (see Pl.H, 4). **2** triangular headkerchief (see Pl.F, 9).

التربيعة *ʔit-tarbiiʕa* /prop n/ market in Cairo, in the Ghouriyya district.

تربيعى *tarbiiʕi* /adj/ *[math]* pertaining to squaring. *gizr tarbiiʕi* square root.

مربّع *mirabbaʕ, murabbaʕ*[1] /n pl *-aat*/ square. ‖*mirabbaʕ il-ʔiff [naut]* cross-jack. *-ʔumaaf mirabbaʕaat* (1) checkered cloth. (2) needle-point cloth.

مربّع *murabbaʕ*[2] /n/ **1** *[mus]* 4/4 time. **2** dance performed by horses.

اتربّع *ʔitrabbaʕ* /vi/ **1** to be formed into a square. **2a** to be quadrupled. **2b** *[math]* to be squared. **3** to sit cross-legged. - ava/iva *mitrabbaʕ*.

رابع *raabiʕ*[2] **1** /vt/ to undertake a quarter share with (s.o., in business etc.). *ḫ-arabiʕ-kum fil-beeʕa di* I'll be your fourth partner in the deal. **2** /vi/ *[rur]* to work as a farm labourer (because labourers formerly shared a quarter of the crop). - vn *mirabʕa*; ava *miraabiʕ*.

مرابعة *mirabʕa* /adv/ by four people. *yitfaal mirabʕa* it is carried by four people. *bi-yilʕabu koomi mrabʕa* they play four-hand *koomi*.

مرابع *miraabiʕ* /n */ *[rur]* farm labourer.

استربع *ʔistirabbaʕ* /vi/ to sit cross-legged. - ava *mistirabbaʕ*.

ر ب ع ن see also ر ب ع

ربعن *rabʕan* /vi/ to reach the fortieth day (1) after childbirth (of a mother or child). *lamma rabʕant' sxint' ʔawi* forty days after giving birth, my temperature went up very high. (2) after death (of the deceased). - vn *rabʕana*; ava *mirabʕan*.

ر ب ك

ربك *rabak (i, u)* /vt/ **1** to entangle, muddle, compli-

cate. *marbuuk fiſ-ſuʏl* up to one's neck in work. **2** to confuse, bewilder, embarrass. - vn *rabka*; ava *raabik*; pva *marbuuk*.

ربكة *rabka* /n pl *-aat*/ confusion, muddle.

مربك *murbik*↑ /adj */ confusing, complicated. *ſil-mawqif murbik wi-raʏm*ⁱ *kida ḥ-alaaqi ḥall* it's a complicated situation, but even so I'll find a solution.

اتربك *ſitrabak* /vi/ **1** to be or become muddled. *ſiſ-ſuʏl*ⁱ *ḥa-yitribik* the work will get messed up. **2** to become confused and embarrassed. *ſawwil ma ſaf-ha trabak* as soon as he saw her he became flustered. - ava/iva *mitribik*.

ارتبك *ſirtabak* = *ſitrabak*. - vn *ſirtibaak*; ava *mirtibik*.

ر ب ن

ربّان *rubbaan* /n pl *rababna*/ captain, skipper.

ر ب و ¹

ربوة *rabwa* /n pl *ruba*/ hill, slight incline.

ربا *riba* /n/ usury.

رباية *ribaaya* /n/ **1** upbringing, education. *ſana sitt*ⁱ *rbaayit madaaris* I'm a woman with schooling. **2** good breeding, good manners. *ſin-naas dool ɛanduhum ribaaya* those are well-bred people.

ربّى *rabba*² /vt/ **1a** to make or let grow, rear. *bi-nrabbi t-taqaawi f-qaṣaari* we grow the seeds in pots. *bi-yrabbu g-gimaal ɛaſaan iſ-feel* they raise camels for carrying work. *rabba faɛr-u* he let his hair grow. *huwwa mrabbi daqn-u* he has a beard. ‖*ɛuguul tarbiyya* calves kept for meat. - *rabbit il-xamiira* she prepared the leaven so that it started to work. - *rabbit-li ɛilla* she made me sick and tired, she made me fed-up. **1b** to keep (an animal, as a pet). *ſil-ɛeela mrabbiyya kalb* the family keeps a dog. **2** to put on (extra weight or the like). *rabbeet kirſ* you've grown a paunch. *ſin-naas bi-tzaʏʏaṭ-hum ɛaſaan yirabbu laḥmⁱ ktiir* people force-feed them to make them put on a lot of meat. **3a** to bring up, raise (children). *da ɛamm-i lli rabbaa-ni* this is my uncle who brought me up. *rabbaa-hum tarbiyya masiḥiyya* he gave them a Christian upbringing. **3b** to educate in moral and social conduct, bring up to be well-mannered. *ſilli ma-trabbii ſil-ſahaali trabbii ſil-ſayyaam [prov]* he who is not disciplined by his parents will be disciplined by life. - vn *tarbiyya, tarbiya*↑; ava/pva *mirabbi*.

تربية *tarbiyya, tarbiya* /n/ **1** education, upbringing. *wizaarit it-tarbiya wit-taɛliim* the Ministry of Education. *tarbiya badaniyya* physical education. *ɛadiim it-tarbiyya* ill-bred. **2** *[cook]* thickening of flour and butter or yoghurt added to soups and stews.

مربّي *murabbi* /n */ mentor, spiritual tutor.

مربّية *murabbiyya, murabbiya* /n pl *-aat*/ children's nurse, nanny, nursemaid.

تربوي *tarbawi* /adj/ pedagogical, educational.

اتربى *ſitrabba* /vi/ **1** to be raised, be reared. *ſil-firaax bi-titrabba fil-beet* the chickens are raised in the house. **2** to be well brought-up. *ſinta ɛaliil il-ſadab wi-ma-trabbet-ſ* you are rude and ill-bred. - iva *mitrabbi*.

رابى *raaba* /vi/ to practise usury. - ava *miraabi*.

مرابي *muraabi* /n */ usurer.

ر ب و ²

ربو *rabw* /n/ asthma.

ر ب و ر

ربور *raboor* <Fr *rapport*> /n/ report.

ر ب و ه

ربوه *rabooh* <Fr *rabot*> /n pl *-aat*/ *[carp]* **1** trying plane. **2**.planing machine.

ر ب ى ¹ see ر ب و ¹: *ribaaya, rabba, tarbiyya, tarbiya, murabbi, murabbiyya, ſitrabba, raaba, muraabi*

ر ب ى ² see ر ب ب ²: *marabba*

ر ب ى ر

روبير *rubeer* <Fr *repère*> /n/ *[eng]* bench-mark.

ر ت ب

رتبة *rutba* /n pl *rutab*/ rank. *rutab ɛaskariyya* military ranks.

رتيب *ratiib* /adj */ monotonous.

مرتبة *martaba* /n pl *maraatib*/ **1** mattress. **2** rank, status. ‖ *ſallaah yiɛalli maratb-ak* God advance you! (expressing gratitude). - *maɛa martabit iſ-faraf [acad]* with honours, as in *ſitxarragt*ⁱ *b-taqdiir gayyid giddan maɛa martabit iſ-faraf* I graduated with the grade 'Very Good with honours'.

راتب *raatib* /n pl *rawaatib*/ **1** regular supply. *raatib il-biqaala* regular grocery order. *laḥmit ir-raatib* the regular meat order. ‖*ḥallaaq ir-raatib* barber who makes regular visits to customers. **2** salary, wage. — /adj/ **3** regular. *ſil-ſimaam ir-raatib* the regular imam.

رتّب *rattib* /vt/ to put in order, arrange. *rattib hiduum-ak fid-durg* arrange your clothes in the drawer. *rattibt-i-lak maɛaad* I've arranged an appointment for you. *ſik-kutub mirattiba tartiib ſabgadi* the books are arranged alphabetically. ‖*raagil murattab* an orderly man. - vn *tartiib*; ava *mirattib*; pva *mirattib, murattab*.

ترتيب *tartiib* /n pl *-aat*/ **1** organization, order, arrangement. *bit-tartiib* in order, in succession. **2** plan, preparation. *tartibaat il-faraḥ* arrangements for the wedding-party.
مرتّب *murattab* /n pl *-aat*/ salary.
اترتب *ʕitrattib* /vi/ to be put in order, be arranged. - iva *mitrattib, mutarratibˆ*.
¶ *ʕitrattib ɛalaˆ* to follow upon, be consequential upon.

ر ت ت ي ف
روتاتيف *rutatiif* <Fr *rotative*> /n/ *[print]* rotary press.

ر ت ر د
ريترد *ritrid* <Engl> /n/ *[auto]* retread.

ر ت س
رتسا، ريتسا *ritsa* <It *rizzo*> /coll n/ sea-urchin(s).

ر ت ش [1]
رتس *ratʃ* /n/ **1** soil, earth. **2** rubble, broken stone. - also *radʃ*.
رتشة *ratʃa* /unit n, pl *-aat*/ piece of stone or broken brick.

ر ت ش [2] see ر ت و ش : *rutuuʃ*

ر ت ع
رتع *rataɛ (a)* /vi/ **1**ˆ to revel, indulge oneself. **2** to let up, calm down. *ʈuul in-nahaar titxaaniq ma-tirtaɛ-ʃ' laḥẓa* she is quarrelling all day long and never shuts up for a moment. - vn *rataɛaan*; ava *raatiɛ*.

ر ت ل [1]
رتل *rattil* /vt/ **1** *[Isl]* to chant (e.g., the Koran, according to prescribed rules). **2** *[Chr]* to sing, chant (hymns, responses etc.). - vn *tartiil*; ava *mirattil*; pva *murattal*.
ترتيلة *tartiila* /n pl *taratiil/ [Chr]* hymn.
مرتّل *murattil* /n */ *[Chr]* cantor.
اترتل *ʕitrattil* /vi/ passive of *rattil*. - iva *mitrattil*.

ر ت ل [2] see ل ت ر : *ritl*

ر ت و ش
رتوس *rutuuʃ* <Fr *retouche*> /n/ *[phot]* retouching (of a negative).

ر ت ي ن [1]
روتين *rutiin* <Engl> /n/ **1** routine, humdrum round. *rutiin il-ḥayaah il-ɛadiyya* the routine of ordinary life. **2** bureaucratic routine, sanctified practice. *ʃir-rutiin ma-yismaḥ-lii-ʃ ʃaruuḥ maafi* it would be contrary to regulations for me to go on foot.
روتيني *rutiini* /adj */ **1** routine, normal. *ʃigraʃaat rutiniyya* routine procedures. **2** attached to routine. *ḥa-yifham ʃinnak rutiini zayyu* he'll think that you're as much a stickler for routine as he is.

ر ت ي ن [2]
رتينة *ritiina, ratiina* <It *retina*> /n pl *rataayin*/ mantle (of a Tilley lamp).

ر ت ي ن ج
رتينج، راتينج *ratiinag* /n pl *-aat*/ resin.
رتينجي، راتينجي *ratingi* /adj/ resinous.

ر ث ي see ر س ي [2]

ر ج ء see ر ج و : *ragaaʃ*

ر ج ب
رجب *ragab* /n/ Ragab, the seventh month of the Muslim year. ‖*la yiɛgib-u l-ɛagab wala ṣ-ṣiyaam fi-ragab [prov]* (he is pleased neither by wonders nor even by fasting in Ragab) ≈ he is the sort who will always find something to disapprove of, even in the most remarkable things.
الرجبيّة *ʃir-ragabiyya* /n/ *[Isl]* **1** the 27th of Ragab. **2** visit to Mecca made on that day.

ر ج ج
رجّ *ragg (u)* /vt/ to shake, cause to tremble, cause to quake. - vn *ragg, ragagaan*; ava *raagig*; pva *marguug*.
رجّة *ragga* /inst n, pl *-aat*/ a shaking, a trembling, a quake.
اترجّ *ʕitragg* /vi/ to shake or be shaken, tremble or be made to tremble, quake or be made to quake. - ava/iva *mitragg*.
ارتجاج *ʕirtigaag* /n/ *[path]* concussion.

ر ج ح
راجح *raagiḥˆ* /adj/ preponderant. *ʃil-kaffa r-ragḥa* the upper hand. ‖*ɛaql' raagiḥ* a sensible mind, a prudent mind. see further under م ر ج ح

ر ج ر ج
رجرج *ragrag* /vt/ to cause to quiver, tremble or vibrate. - vn *ragraga*; ava/pva *miragrag*.
اترجرج *ʕitragrag* /vi/ to quiver, tremble, vibrate. - ava *mitragrag*.

ر ج ع

رجع *rigiʕ (a)* /vi/ **1** to come or go back, return. *ma-b-yirgaʕ-ſ* ʕilla *baʕd il-ʕaſa* he doesn't come back till after supper. *rigiʕna taani lil-ʕamsaal* we've got back to saying proverbs again. ʕ*il-ħasana ħa-tirgaʕ-lak bil-xeer* the good you do will bring you good. ‖*rigiʕ fi-kalaam-u* (1) he went back on his word. (2) he changed his mind. **2** to refer. *ma-fii-ſ kutub yirgaʕ laha ţ-ţalaba* there are no books for the students to consult. ʕ*ir-ruguuʕ lif-ſaʕb* consulting the people. **3** to go back, be attributable (to an origin). *fii yimkin sittiin ɣaţsa laakin kull-a-ha b-tirgaʕ li-talat* ʕ*awḍaaʕ lig-ġism* there are maybe sixty ways of diving but they all go back to three physical positions. *di ragʕa l-ẓuruuf il-*ʕ*iṣaaba* this is attributable to the circumstances surrounding the injury. **4** /preverb/ to return (to doing s.th.). *rigiʕ yiqul-li* he started telling me again. *dimaaɣ-i rigʕit tiwgaʕ-ni* my head started hurting again. - vn *ruguuʕ*; ava *raagiʕ*.

¶ *rigiʕ ʕan* to turn from, give up. ʕ*irgaʕ ʕan ʕamayl-ak* give up your (evil) ways!

رجوع *ruguuʕ* /n/ return. *bi-ruguuʕ il-bariid* by return of post. ‖*ruguuʕ if-ʃeex (*ʕ*ila ṣibaa)* the old man's return to youth (title of a widely-quoted book on sexual techniques).

مرجوع *marguuʕ* /n pl *-aat*/ unsold merchandise, surplus stock. ʕ*axbaar il-yoom taqriiban ma-l-haa-ſ marguuʕ* there are virtually no surplus copies left of (the weekly) Akhbar el-Yoom. ‖*yirgaʕ marguʕ-na li-...* let our subject revert to.... - *nirgaʕ li-marguʕ-na* let's get back to our (original) subject.

رجعة *ragʕa* /unit n/ a return.

رجعى *ragʕi* /adv */ **1** retroactive. *bi-*ʕ*asar ragʕi* with retroactive force, with retroactive effect. **2** revocable. *ţalaaq ragʕi [leg]* revocable divorce. **3** reactionary.

رجعيّة *ragʕiyya* /n/ *[pol]* reactionism.

رجيع *ragiiʕ* **1** /adj invar/ second-rate, second-hand. **2** /coll n/ rejects. ‖ *ragiiʕ il-koon* rice hulls.

مرجع *margiʕ*↑ /n pl *maraagiʕ*/ reference work. *kaſſaaf miţʕaddid il-maraagiʕ* cross index.

رجّع *raggaʕ, raggaʕ* /vt/ **1** to cause to return, move or bring back, give or take back. *raggaʕt*^{i} *ktaab* I returned one book. *raggaʕ dimaaɣ-ak* move your head back! *maddeet* ʕ*iid-i w-raggaʕt-a-ha taani* I stretched out my hand and withdrew it again. *raggaʕ if-firiiţ* he rewound the tape. ʕ*il-ħagaat di tiraggaʕ-na l-maṣr il-firʕoniyya* these things take us back (in time) to pharaonic Egypt. ‖*zuraar it-targiiʕ* back spacer on a typewriter. **2** to bring up, vomit. *raggaʕt*^{i} *kull illi f-baţn-i* I brought up everything that was in my stomach. **3** to attribute. ʕ*ana b-araggaʕ ɣaraf-u mid-dinya l-beet-u* I attribute his general discontent to his home-life. - vn *targiiʕ*; ava/pva *miraggaʕ*.

ترجيعة *targiiʕa* /n pl *-aat/ [mus]* refrain.

مرجّع *miraggaʕ* /n pl *-aat/ [mus]* segno of a passage to be repeated.

ارتجّع ʕ*itraggaʕ* /vi/ passive of *raggaʕ*. - iva *mitraggaʕ*.

راجع *raagiʕ* /vt/ **1** to revise, check, review. ʕ*il-muhandis il-*ʕ*inſaa*ʕ*i b-yiigi yraagiʕ il-maqasaat* the construction engineer comes and checks the measurements. *raagiʕ nafs-u* he reconsidered. - *qism il-muragʕa* comptrolling department. **2** to audit (an account). *mizaan muragʕa [bank]* trial balance. - vn *muragʕa*; ava *miraagiʕ*; pva *muraagaʕ*↑.

مراجعة *muragʕa* /n pl *-aat/* check, revision, audit.

مراجع *muraagiʕ* /n */ **1** checker, reviewer. **2** auditor.

اتراجع ʕ*itraagiʕ* /vi/ **1** to be gone over, be checked, be revised. **2** to be audited. **3** to recede, retreat. - ava/iva *mitraagiʕ*.

مرتجع *murtagaʕ* **1** /adj/ unsold (merchandise), surplus (stock). ‖*zeet murtagaʕ* used (car) oil (sold cheap for re-use). **2** /n pl *-aat/* unsold merchandise, surplus stock.

أرجع ʕ*argaʕ* /vt/ to attribute. - vn ʕ*irgaaʕ*; ava *murgiʕ*.

استرجع ʕ*istargaʕ*↑ /vt/ **1** to remind oneself of (s.th.), recall. ʕ*il-*ʕ*ustaaz bi-yistargiʕ muḥaḍraat-u* the professor goes over his lectures (to refresh his memory). **2** to recall, ask the return of. - vn ʕ*istirgaaʕ*; ava *mistargiʕ*.

ر ج ف

رجف *ragaf (i)* /vi/ to tremble, shake, shiver. *qalb-i ragaf* my heart trembled. - vn *ragf, ragafaan*; ava *raagif*.

مرجوف *marguuf* /adj */ shaky, trembling (especially from fear). *qalb-i marguuf mil-ʕamaliyya* I am very frightened of the operation.

ارتجف ʕ*itragaf* /vi/ to be shaken, shake. - ava/iva *mitrigif*.

ارتجف ʕ*irtagaf*↑ = *ragaf*. - vn ʕ*irtigaaf*↑; ava *mirtigif*.

ر ج ل ¹

راجل *raagil* /n pl *riggaala, rigaal*↑ / **1a** man, adult male. *raagil kibiir* an old man. ‖*raagil il-beet* the master of the house. **1b** one distinguished by manly qualities and virtues. *xallii-k raagil* be a man! *ʕamal raagil ʕalayya* he tried to show me what a tough guy he was. - /adjectivally, occasionally fem *ragla/ da waad raagil* he's a manly boy. *di sitt*^{i} *raagil* she's a tough woman. *xallii-ki bitt*^{i} *ragla* be a brave girl! **1c** condescending or familiar form of address or reference to a man. ʕ*inta ya raagil* hey, you there! ʕ*ir-raagil ig-ganayni lli kaan hina* the garden-

er fellow who was here. **2** husband. *ragl-ik feen* where's your husband? *ʔill' raagil wala ʔill' ħeeṭ [prov]* (the shadow of a husband rather than that of a wall) ≈ it's better to get married than to stay at home by yourself. **3** underling, employee, follower. *ʕir-raagil bitaaʕ-i* my man, my servant, my agent, etc. *riggaalit il-miʕallim* the boss's men, the boss's gang. **4** king in a pack of playing-cards. — *riggaalit, rigaal* /pl n in const state/ **5** the men of (a particular profession). *rigaal id-diin* the men of religion. ‖*ma-ygib-ha lla rigal-ha* it takes an expert (compliment to one who accomplishes a difficult task).

رجالى *rigaali* /adj invar/ **1** pertaining to men, for men. *banṭalonaat rigaali* men's trousers. **2** consisting of men. *firʔa rigaali* a men's team.

رجولة *ruguulaʔ* /n/ manliness.

رجوليّة *ruguliyya* = *ruguula*.

استرجل *ʔistargil* **1** /vt/ to consider manly. *ʔistargilt-u lamma ʔaam yidaafiʕ ʕankum* I thought it very manly of him when he defended you. **2** /vi/ to become mannish, affect manliness. *sitt' mistargila* a mannish woman. - vn *ʔistirgaal*; ava *mistargil*. see further under م ر ج ل.

ر ج ل ²

رجل *rigl* /fem n, pl *rigleen, ruguul*/ **1** foot, leg (of a person or animal). *raaħ ʕala riglee* he went on foot. *ħuufi rigleen il-waad* keep the kid's feet away! *simiʕt' rigl' maʃya ʕas-sillim* I heard a footstep on the stairs. ‖*xiliww' rigl* key-money. - *ħagar rigleen* pumice stone. - *ħaṭṭ' rigl[a] ʕala rigl* he crossed his legs. *sallim ʕalayya w-huwwa ħaaṭiṭ rigl[a] ʕala rigl* he shook hands with me without even bothering to uncross his legs (a sign of disrespect). - *rigl-u wil-ʔabr* he has one foot in the grave. - *gat rigl-u fiiha* he got mixed up in it (i.e., in the mess, in the disaster etc.). - *wi-rigl-ak fooʔ raʔabt-ak* whether you like it or not! - *ga-k kasr' rigl-ak [abus]* ≈ drop dead! - *waaʔif* (or *ʔaayim*) *ʕala rigl* ≈ hopping with excitement, as in *ʔil-balad waʔfa ʕala rigl* the town is hopping with excitement. - *wiʔif ʕala riglee* to stand on one's own two feet, become self-reliant. - *bi-riglee* of one's own volition, as in *giit bi-riglay-ya* I came of my own free will, no one forced me to come, *raaħ lin-naar bi-riglee* ≈ he walked into it with his eyes wide open, he and no-one else is responsible for the trouble he's in. - *b-agiib rigl-u fik-kalaam* Iam trying to trick him into telling the truth. - *bi-tgurr'* (or *bi-tisħab) rigl-u* she leads him on, she tempts him. - *hiyya ʔiid-i w-rigl-i* it is indispensable to me. - *ʔabu rigl' masluuxa* ≈ the bogeyman. - *kull[a] ħaaga taħt' riglee* everything is at his disposal. - *ʔil-kidb' ma-luu-ʃ rigleen* a lie will out. - *rigl il-ɣuraab* bird's-foot trefoil. **2** track, footsteps, wake, train. *fi-rigl-* following after, in the train of, as in *gayya f-riglee-hum* she is following them. *rizʔ-u f-riglee* good fortune follows him around, *ħaẓẓ-u f-riglee* he always has the same good luck, *ʔil-xeer fi-riglee-k* you bring good luck. ‖*rigl-.. ʕala rigl-..* sticking close to the side of, as in *mineen ma truuħ rigl-i ʕala rigl-a-ha* where ever she goes I am close behind, *ma-na mittaʕtaʕ min hina ʔilla w-rigl-u ʕala rigl-i* I'm not budging from here unless he comes with me. - *ʔir-rigl' fiiha ktiir* it is much frequented. - *ʔaṭaʕ rigl-u min il-beet* he refused to set foot in the house again. **3** foot, leg (of an inanimate object). *rigl' kursi* a chair leg. *rigleen babuur gaaz* tripod for a primus stove. **4** leg of a garment. *rigl' banṭaloon* a trouser leg. **5** object resembling a foot. *sanda rigl* an L-shaped dolly block.

ر ج ل ³

ارتجل *ʔirtagalʔ* /vt/ to improvise. *ʔiza l-mumassil naṭṭ' saṭr' ʔaw saṭreen laazim yirtagil kilmiteen* if the actor skips a couple of lines he has to improvise a few words. - vn *ʔirtigaal*; ava *mirtigil*.

ارتجالى *ʔirtigaaliʔ* /adj/ improvised. *ʕazf irtigaali* extemporized playing. *masʔala rtigaliyya* an improvised affair. ‖*ʃuɣl irtigaali* poorly-planned work.

ر ج ل ⁴

رجلة *rigla* /n/ purslane.

ر ج ل ا ج see ر ج ل ش : *riglaaj*

ر ج ل ش

رجلاش *riglaaf* (also *riglaaj*) <Fr *réglage*> /n/ *[mech]* regulating, adjusting. *riglaaf ʕarabiyya* car-tuning. - also *riklaaf, riklaaj*.

رجلش *raglif* /vt/ *[mech]* to regulate, tune, adjust, set. - ava/pva *miraglif*.

اترجلش *ʔitraglif* /vi/ *[mech]* to be regulated, be tuned, be adjusted, be set. - iva *mitraglif*.

ر ج م ¹

رجم *ragam (u)* /vt/ **1** to stone. **2** to revile, curse (particularly by saying *ʔaʕuuzu bi-llaahi min if-fiṭaan ir-ragiim*). - vn *ragm*; ava *raagim*; pva *marguum*.

رجيم *ragiim* /adj/ **1** stoned. **2** reviled. ‖*ʔir-ragiim* accursed one (epithet of Satan). *ʔaʕuuzu bi-llaahi min if-fiṭaan ir-ragiim* I take refuge in God from the accursed Satan (an invocation of protection).

اترجم ʃitragam /vi/ **1** to be stoned. **2** to be reviled, be cursed. -iva *mitrigim*.

انرجم ʃinragam = ʃitragam.

رجّم raggim /vt/ **1** to stone, pelt with stones. **2** to hurl abuse at. -vn *targiim, targiim*; ava *miraggim, miraggim*.

رج م [2] see رج ى م : *rijiim*

رج ن see رج ى ن : *ragiina*

رج و

رجا raga *(u)* /vt/ **1**↑ to hope (for). *nargu ʃinn[i] kalam-na ykuun mafhuum* we hope our words are understood. **2** to beseech, implore. *ʃarguu-k* please! I implore you! *ʃarguu-ki ma-tkallimi-nii-ʃ ɛan ig-gawaaz taani* I beseech you, don't talk to me again about marriage! -vn *raga, ragaaʃ*; ava *raagi*; pva *margu*.

رجاء raga, ragaaʃ↑ /n/ **1** hope. *ragaaʃ-i fiik waḥd-ak ya rabb* my hope lies in you alone, O Lord. *ma-minnuu-ʃ raga* he's hopeless. *xaayib ir-raga* hopeless. *ʃitlamm il-matɛuus ɛala xaayib ir-raga [prov]* (the luckless joined up with the hopeless) ≈ one bad thing on top of another. **2** /pl *ragawaat, ragaʃaat*/ request for a favour. *ʃit-tarqiyya bil-ɛamal miʃ bir-ragawaat* promotion is by work not by favouritism.

اترجّى ʃitragga /vt/ to entreat, solicit. *ʃatraggaa-k tiɛmil-li xidma* I entreat you to do me a favour. -ava *mitraggi*.

استرجى ʃistarga↓ /vt/ to expect, hope for. *ʃin biti mirsaal-ak ʃistargaa [prov]* ≈ no news is good news. -ava *mistirgi*.

استرجّى ʃistaragga↓ /vt/ **1** to hope for. *huwwa lli b-astaraggaa mid-dinya* it is all I desire from this world. **2** to beseech, implore. -ava *mistaraggi*.

رج ى see رج و

رج ى م

رجيم rijiim <Fr *régime*> /n/ diet. *ʃana ɛamla* (or *maʃya ɛala) rjiim* I'm on a diet.

رج ى ن

رجينة ragiina <perh T *reçina*> /n/ rosin, colophony.

رح ب

رحبة raḥaba↑ /n pl *-aat*/ open space, square.

أرحب ʃarḥab↑ /el/ larger/largest, more/most generous (in size).

رحاب riḥaab: *fi-rḥaab illaah* may he be welcomed into God's presence! (in reference to one deceased).

مرحب marḥab، = *marḥaba*.

مرحبا marḥaban /interj/ welcome!

مرحبا marḥaba /dual *marḥabteen*, pl *maraaḥib*/ noun equivalent in usage to the English interjection 'welcome!'. *marḥaba* (or less familiarly *marḥabteen* or *maraaḥib*) welcome! greetings! *ya miit* (or *ʃalf* etc.) *marḥaba* a hundred (or a thousand etc.) times welcome! *marḥaba biik* welcome to you!

ترحاب tarḥaab↑, tirḥaab /n/ welcome. *ɢabil-ni bit-tarḥaab* he gave me a warm welcome.

رحّب raḥḥab /vi/ to give a welcome. *raḥḥabna biihum* we welcomed them. *raḥḥab bil-fikra* he welcomed the idea. -vn *tarḥiib*; ava *miraḥḥab*.

رح ح

رحّ raḥḥ *(i)* /vt/ to toss (bread dough) up and down on a *maṭraḥa* (q.v.) to make it flat and round. -vn *raḥḥ, raḥaḥaan*; ava *raaḥiḥ*; pva *marḥuuḥ*.

اترحّ ʃitraḥḥ /vi/ to be flattened and widened by tossing (of bread dough). -iva *mitraḥḥ*.

رح رح

رحرح raḥraḥ /vi/ to sprawl, stretch oneself out. -vn *raḥraḥa*; ava *miraḥraḥ*.

مرحرح miraḥraḥ /adj/ full, loose, wide. ‖*ɢeeʃ miraḥraḥ* flat, crisp, unleavened bread.

رح ض

مرحاض marḥaaḍ↑, mirḥaaḍ↑ (more commonly occurring in the plural form *maraḥiiḍ*) /n/ lavatory.

رح ق

رحيق raḥiiq↑ /n/ nectar.

رح ل

رحل raḥal *(a)* /vi/ to set out on a journey, depart. ‖*ʃirḥali ya ɢeen [magic]* away, you evil eye! -vn *raḥiil*; ava *raaḥil*.

راحل raaḥil /adj */ deceased, late. *ʃiz-zaɛiim ir-raaḥil* the late leader.

رحلة riḥla /n pl *-aat*/ journey, trip. *riḥlit ṣeed* a hunting trip.

رحّالى raḥḥaali: *ɢeeʃ raḥḥaali* type of white bread of wheat or maize flour.

مرحلة marḥala /n pl *maraaḥil*/ stage, phase. *ʃil-ɛamaliyya fiiha ʃarbaɛ maraaḥil* the operation has four stages. *ma-fii-ʃ taxaṣṣuṣ ʃilla baɛd[i] marḥalit il-*

lisans there is no specialization until after the B.A. stage. || *ʕaḥsan bi-maraaḥil* far and away better.

مراحيل *maraḥiil: gamal il-maraḥiil* strongest camel in a caravan.

رحّل *raḥḥal* /vt/ **1a** to send off, despatch. *raḥḥalt-u ɛala maṣr* I sent him off to Cairo. *raḥḥalit iṭ-ṭard* she despatched the parcel. **1b** to deport. *raḥḥaluu-ni mil-balad bil-ɋiwwa* they deported me from the country by force. **2a** to move on a stage, transfer. *raḥḥal il-ʕigmaali f-daftar il-ʕustaaz* he transferred the total to the master ledger. *tarḥiil deen* debt conversion. *ḥa-traḥḥal if-fuvl[a] ɛalayya w-tuqɛud faaḍi* are you going to fob the work off on me and sit idly? **2b** to finish work on, finish off. **3** to move out of true. *ʕil-ḥadsa raḥḥalit ɋaḍiib il-ɋaṭr* the accident forced the railway line out of true. - vn *tarḥiil, tarḥiil*; ava/pva *miraḥḥal*.

ترحيلة *tarḥiila* or *tarḥiila* /n pl *taraḥiil*/ gang of casual or itinerant labourers.

اترحّل *ʕitraḥḥal* /vi/ passive of *raḥḥal*. - iva *mitraḥḥal*.

ر ح م

رحم *raḥam (a)* **1** /vt/ **1a** to have mercy on. *la tirḥam wala txalli raḥmit rabb-i-na tinzil* you neither help (us) nor allow (us) to find relief elsewhere. || *ʕallaah yirḥam-u* God have mercy on his soul! (of the dead), as in *ʕabuu-ya maat ʕallaah yirḥam-u* my father's dead, God have mercy on his soul! ||*law ballavu l-buliiṣ yibɋa l-ɛayyil ʕallaah yirḥam-u* if they inform the police, God help the (poor) kid! - *ʕallaah yirḥam ʕayyaam zamaan* ≈ O for the good old days! - *yarḥamu-kumu llaah* bless you! (to one who sneezes). **1b** to go easy on, spare. *ʕirḥam nafs-ak* go easy on yourself! *ʕana raḥm-u min if-fuvlaana di* I'm sparing him that task. **2** /vi/ to be merciful, show compassion. *fii naas ma-b-yirḥamuu-ʃ* some people have no compassion. ||*buṣṣ' b-ɛeen-ak wi-rḥam bi-ɋalb-ak* (look with the eye, feel pity in the heart) ≈ don't close your eyes to the sufferings of others. - vn *raḥma*; ava *raaḥim*; pva *marḥuum*.

رحمة *raḥma* /n/ **1** mercy, compassion. *xalli f-ɋalb-ak raḥma* show some compassion! *raagil ir-raḥma manzuuɛa min ɋalb-u* a man with not a trace of compassion in his heart. || *wi-raḥmit*... strong oath sworn by the dead, as in *wi-raḥmit ʕabuu-ya* by my dead father's soul! *wi-raḥmit il-ʁalya* by the soul of my dead (mother, sister etc.). - *ʕitwaffa l-raḥmit illaah* he died (and went to rest) in God's mercy. - *bisaaṭ ir-raḥma* baldaquin carried at Coptic funerals. - *ɛalee ʕalf' raḥma* a thousand mercies on his soul. **2** food or money distributed to the poor at cemeteries by relatives visiting tombs of the dead, especially on the traditional mourning Thursdays (viz., *ʕil-xamiis iṣ-ṣuvayyar* and *ʕil-xamiis ik-kibiir*). *ʕaṭlaɛ-lu b-raḥma* I go to visit his grave and distribute alms for his sake. **3** comfort, ease of living, relief from trouble. *hina fii raḥma bin-nisba l-ɛandina* life is easy here compared with where we come from. *ʕiʃ-ʃaay ɛanduku hina raḥma* the tea situation here where you are is easy.

المرحوم *ʕil-marḥuum* /n/ polite form of reference to one dead. *ʕil-marḥuum gooz-ik* your late husband. *ʕil-marḥuuma mraat-ak* your late wife.

رحمن *raḥmaan* /n/ Merciful One (epithet of God). *ya raḥmaan ya raḥiim* what a terrible thing (God save us from such a terrible thing), as in *raagil ya raḥmaan ya raḥiim* what a terrible man! *ʕilli tikrah-u ɋuulu ɋalee ya raḥmaan ya raḥiim* ≈ God help the one she doesn't like!

رحم *raḥim* (also *beet ir-raḥim*) /n/ womb.

أرحم *ʕarḥam* /el/ **1** more/most merciful or compassionate. **2** easier/easiest to bear.

أرحام *ʕarḥaam*ˆ /pl n/ kin. *waaḥid min il-ʕarḥaam* a relative.

رحيم *raḥiim* **1** /adj pl *ruḥama*/ compassionate, merciful. **2** /n/ Compassionate One (epithet of God).

رحّم *raḥḥam* /vt/ **1** to distribute alms or pray in order to secure God's mercy on (the dead). **2** to bless (the dead). - vn *tarḥiim*; ava/pva *miraḥḥam*.

ترحيم *tarḥiim* /n pl *taraḥiim*/ *[Chr]* intercessory prayer for the dead (especially during the liturgy).

اترحّم *ʕitraḥḥam* /vi/ to intercede (for the dead). - ava *mitraḥḥam*.

استرحم *ʕistarḥam* /vt/ **1** to ask (s.o.) for mercy. **2** to consider merciful. **3** to select for mercifulness. - vn *ʕistirḥaam*; ava *mistarḥam*.

ر ح ى

رحاية *raḥaaya* /n pl *-aat*/ quern, hand-mill (see Pl.B, 8).

ر خ ت

رخت *raxt* <P *rakht*> /n pl *ruxúta*/ lavishly decorated saddle of the Arab style worked with velvet and silver and hung with tassels etc.

ر خ خ

رخ *raxx (u)* /vi/ to pour down (of rain). *ya naṭara ruxxi ruxxi ɛala ɋarɛit bint uxt-i* (rain, pour down pour down on my sister's daughter's bald pate) a children's chant said when it's raining ≈ it's raining, it's pouring, the old man's snoring. - vn *raxx, raxaxaan, rixxiyya*; ava *raaxix*.

رخّة *raxxa* /inst n, pl *-aat*/ a heavy shower.

رخ خ [2]

رخ *ruxx* <P *rukh*> **1** /n/ *[obsol]* rook (in chess). **2** /coll n/ legendary bird of gigantic size, roc.

رخ ر see ء خ ر: *raaxar, ruxra, ruxriin*

رخ رخ

رخرخ *raxrax* /vt/ **1** to loosen, slacken. **2** to cause to be feeble or flabby. — /vi/ **3** to become loose, become slack. **4** to become feeble, become enervated. - vn *raxraxa*; ava/pva *miraxrax*.

اترخرخ *ʔitraxrax* /vi/ **1** to become loose or flabby. **2** to be made loose or flabby. - ava/iva *mitraxrax*.

استرخرخ *ʔistiraxrax* /vi/ to become loose or flabby. - ava *mistiraxrax*.

رخ ص [1]

رخص *rixiṣ, ruxuṣ (a)* /vi/ to go down in price. *ʔil-ħagaat il-ɣalya rixṣit* the expensive items became cheaper. *ʔil-ɣaali yirxaṣ-lak* ≈ nothing is too good for you. - vn *ruxṣ*.

رخص *ruxṣ* /n/ cheapness. ‖*fir-ruxṣ* when things were cheap. - *bi-ruxṣ it-turaab* dirt cheap.

رخاصة *raxaaṣa* /n/ cheapness.

رخوصيّة *ruxuṣiyya* /n/ cheapness.

رخيص *rixiiṣ* /adj pl *ruxaaṣ*/ **1** cheap, inexpensive. **2** cheap, mean.

رخّيص *rixayyiṣ* /adj */ cheap, inexpensive. *rixayyiṣ wi-kwayyis wi-bn' naas* cheap, of good quality and produced by reliable people ≈ ideal.

أرخص *ʔarxaṣ* /el/ **1** cheaper/cheapest. **2** meaner/meanest.

رخص *raxxaṣ'* /vt/ **1** to lower in price. *miʃ ħa-traxxaṣ-ha ʕan kida* won't you reduce its price more than that! **2** to degrade, humiliate. *raxxaṣtii-ni ʠawi ya bint ik-kalb* you've made me look very cheap, you bitch! - vn *tarxiiṣ*; ava/pva *miraxxaṣ*.

اترخّص *ʔitraxxaṣ'* /vt/ to be made cheaper. - iva *mitraxxaṣ*.

استرخص *ʔistarxaṣ* **1** /vt/ **1a** to consider cheap. **1b** to choose for cheapness. **2** /vi/ to look for cheapness, economize. *fii bi-yistarxaṣu w-yiftiru n-nooʕ il-ʔaʠall' maʕa ʔinn il-ɣaali ṭaman-u fii* there are those who economize and buy the inferior sort, though it pays to buy the best. ‖*ya mistarxaṣ ya mistaɣli* when you buy cheap goods you end up paying more. - vn *ʔistirxaaṣ*; ava *mistarxaṣ*.

رخ ص [2]

رخصة *ruxṣa* /n pl *ruxaṣ*/ licence, permit. *ruxṣit siwaaʠa* driving licence. *ruxṣit silaaħ* gun licence.

رخّص *raxxaṣ*[2] /vt/ to license, permit, authorize. - vn *tarxiiṣ*; ava/pva *miraxxaṣ*.

ترخيص *tarxiiṣ* /n pl *taraxiiṣ*/ licence, permit.

اترخّص *ʔitraxxaṣ*[2] /vi/ to be licensed. - iva *mitraxxaṣ*.

رخ م

رخم *rixim* /adj */ unattractive, boorish, indolent.

رخام *ruxaam* /n/ marble. *baarid ʒayy ir-ruxaam* as cold (i.e. unfeeling, insensitive) as marble. *naxl' ruxaam* marble palms.

رخامة *ruxaama* /unit n, pl *-aat*/ **1** slab of marble, marble table-top, marble counter. **2** a marble palm.

رخّم *raxxam* /vt/ **1** to marble (paper). **2** to cover or decorate with marble. **3** to cause to sag, cause to lie heavy, cause to drag. — /vi/ **4** to sag, drag, lie heavy. **5** to become boorish. - vn *tarxiim*; ava/pva *miraxxam*.

مرخّماتي *miraxxamaati* /n pl *-yya*/ mason who works in marble.

اترخّم *ʔitraxxam* /vi/ **1** to be marbled (of paper). **2** to be covered or decorated with marble. - iva *mitraxxam*.

رخ و see رخ ى: *raxw, raxaawa, rixw*

رخ ى

رخى *raxa (i)* **1** /vt/ to slacken, loosen, relax. *ʔirxi f-fabaka fwayya* lower the net a little! *ʔirxi l-ħabl* slacken off the rope! ‖*ʔirxi-lhum il-ħabl* give them more rope! be more lenient with them! **2** /vi/ to become slack, become loose. - vn *raxayaan, raxy*; ava *raaxi*; pva *marxi*.

مرخى *marxi* /adj */ near-impotent, sexually feeble (of a man).

رخو *raxw, raxw* **1** /n pl *raxaawi*/ whiplash. **2** /adj invar/ spineless, soft, feeble.

رخو *rixw* /adj/ slack, loose.

رخا، رخاء *raxa, raxa, raxaaʔˤ* /n/ abundance, plenty.

رخاوة *raxaawa, raxaawa* /n/ slackness, looseness. ‖*ʕandu raxaawa* he's effeminate.

تراخى *taraaxiˤ* /n/ slackness, laziness, not pulling one's weight.

اترخى *ʔitraxa* /vi/ to be slackened, be loosened, be relaxed. - ava *mitrixi*.

رخّى *raxxa* /vt/ **1** to slacken. *raxxi f-fabaka fwayya* slacken the net a little. **2** to weaken, enervate. - vn *tarxiyya*; ava/pva *miraxxi*.

اترخّى *ʔitraxxa* /vi/ **1** to be slackened. **2** to be weakened, be enervated. - iva *mitraxxa*.

أرخى *ʔarxaˤ* = *raxa*.

ارتخى ʕirtaxa /vi/ **1** to become slack, become loose. **2** to lose vigour, become impotent. - vn *ʕirtixa, ʕirtixaaʕˀ*; ava *mirtixi*.

استرخى ʕistarxa /vi/ to be relaxed. *bi-ykuun ir-raas fooq il-mayya wir-rigleen mistarxiyyiin* the head is above the water and the legs relaxed. - vn *ʕistirxa, ʕistirxaaʕˀ*; ava *mistarxi*.

استرخّى ʕistiraxxa /vi/ to become loose, slacken. - ava *mistiraxxi*.

ر د ا

ردا *rida: ṭuul ɛumr-ak ya rida wi-nta kida [prov]* (all your life, you garment, you've been the same) ≈ I am the same as I ever have been so the change must be in you.

ر د ا ر

رادار *radaar* <Fr> /n/ radar.

ر د ء see ر د ى

ر د ح

ردح *radaḥ (a)* /vi/ to indulge in a vulgar slanging match (usually of women). - vn *radḥ*; ava *raadiḥ*.

ردّاحة *raddaaḥa* /adj pl *raddaḥiin*/ foul-mouthed, abusive (of women).

ر د خ

ردّاخ *raddaax* /n pl *-aat*/ **1** *[auto]* fuel-pump. **2** valve. *makanit raddaax* lavatory cistern inlet valve. - *kawitʃit raddaax* rubber valve seal.

ر د د

ردّ *radd¹ (u)* /vt/ **1** to give back. *miʃ raddenaa-lu l-ɋalam* didn't we give him back the pen? **2** to put back in position, restore. *rudd il-baab* close the door! *ʕil-migabbaraati radd-i-lu kitf-u* the bone-setter reset his shoulder. *ʕiddaa ɋalam radd-i-lu ɛaɋl-u* he gave him a slap that brought him to his senses. ‖*radd' mraat-u* he remarried his ex-wife. - *ḥaaga trudd' r-rooḥ* something that refreshes the spirit, as in *manẓar yirudd ir-rooḥ* a sight for sore eyes. **3** to reciprocate. *raddu s-salaam* they returned the greeting. *raddit laha z-ziyaara* she paid a return visit to her. **4** to point out mistakes to, correct. *ʕiza kaan ʏalṭaan laazim tirudd-u fil-ʏalaṭ* if he's in error you must put him right. ‖*ɋaalu ya firɛoon ʕeeʃ farɛan-ak. - ɋaal ma-lɋit-ʃ' ḥadd' yrudd-i-ni [prov]* They said, 'Tyrant, what made you tyrannical?' He said, 'No one corrected me'. **5** to remove, rescind, lift. *ʕilaah-i laa ʕasʕal-ak radd il-ɋaḍa bal il-luṭf' fii* O God, I do not ask You to rescind Your providence, rather that You deal kindly with me in it. **6** to reject, ward off, oppose. — /vi/ **7** to reply. *ʕinti ma-bi-truddii-ʃ ɛalayya leeh* why don't you answer me? *ʕin-nimra ma-bi-trudd'-ʃ* the (telephone) number doesn't answer. **8** /preverb/ to reply (and say). *ʕarudd aɋul-lu ʕeeh* what shall I reply to him? **9** to return. *ʕil-ɛaya kaan bi-yuɋaf wi-yrudd* the sickness used to come and go. ‖*fikra raddit fi-muxx-i* an idea reoccurred to me. - *raddit il-mayya f-ẓoor-ak* may the water choke you! **10** to grow healthy. *lamma btada yaakul radd' b-surɛa* when he started eating, he quickly got his health back. *wiʃʃ-u raadid* his face is glowing with health. - vn *radd, radadaan*; ava *raadid*; pva *marduud*.

¶ *radd[a] ɛala* to refer to, consult. *kaan yiṣaḥḥ' trudd[a] ɛalayya ɋabl' ma tiʃtiri l-beet da* you should have consulted me before buying this house.

ردّ *radd²* /n pl *ruduud*/ reply. ‖*radd' fiɛl* reaction. - *radd' ʃaraf* restitution of honour.

¶ *raddan: raddan ɛalaˀ* in reply to.

ردّة *radda¹* /inst n/ one act of returning, answering, etc. ‖*liɛbit iṣ-ṣadda radda* (1) street ball game. (2) hand-clapping game similar to that played to the rhyme 'Pat-a-cake, pat-a-cake'. - *ʕiid-u fiiha r-radda* he can cure (illnesses) by the touch of the hand.

ردّة *radda²* /n/ bran. ‖*riḥt-u radda* it smells musty.

مردود *marduud* /adj/ ajar (of a door etc.).

ردّ *ridd* /n/ *[obsol]* ball game resembling a simple form of hockey.

ردّة *ridda* /n/ apostasy.

مردّ *maradd, maradd* /n pl *-aat, -aat*/ **1** trace (by which a farm implement is attached to the draught animal). **2** part of a garment that is turned back on itself, revers. **3a** *[mus]* refrain. **3b** *[Chr]* liturgical response.

اتردّ *ʕitradd* /vi/ **1** to be given back. ‖*yitradd-i-lak fil-ʕafraaḥ* ≈ may we have the chance to repay your generosity on other happy occasions! (conventional compliment to a host or giver of a gift). **2** to be put back in position. ‖ *ʕitradd iɛtibaar-u* (1) his good standing was restored. (2) *[leg]* the conviction was erased from his record. **3** to be reciprocated. **4** to be corrected in one's mistakes. - iva *mitradd*.

انردّ *ʕinradd* = *ʕitradd*.

ردّد *raddid* /vt/ to give the response (to), echo. *ʕil-muṭrib bi-yɋuul il-mazhab wi-baɛdeen il-kooras bi-yraddid-u* the singer sings the refrain and then the chorus repeats it. - vn *tardiid*; ava *muraddid*.

مردّد *muraddid* /n */ *[Chr]* cantor in the Coptic Church.

اتردّد *ʕitraddid, ʕitraddid* /vi/ **1** to go often. *bi-titraddid*

ɛal-baraat she frequents the bars. *bi-yitraddid ɛalee* he often goes to see him. **2** to hesitate. *ɛamiil mitraddid xaayif sahl[i] giddan ʃinn ana ʃaqniɛ-u* given a hesitant timid customer, I can easily convince him. **3**↑ to vibrate. - vn *taraddud*; ava *mitraddid, mutaraddid*↑.

تردّد *taraddud* /n/ **1** hesitancy, irresolution. **2** /n pl *-aat*/ *[communic]* frequency.

ارتدّ *ʃirtadd* /vi/ **1** to return, revert. *yirtadd[i] lu baṣar-u* his sight will return. **2** to apostatize. **3** to be returned. - vn *ʃirtidaad*; ava *mirtadd, murtadd*.

¶ *ʃirtadd[a] ɛala* (impersonal) passive of *radd[a] ɛala*. *ʃilli zayyak ma-yirtadd[i]-ʃ ɛalee* someone like you is not worth consulting with.

ارتداد *ʃirtidaad* /n/ apostasy.

مرتدّ *murtadd* /n */ apostate.

استردّ *ʃistaradd* /vt/ to recall, ask for the return of, take back. - vn *ʃistirdaad*; ava *mistiridd*.

ر د ر see ر د ا ر : *radaar*

ر د ش

ردش *radʃ* /n/ **1** soil, earth. **2** rubble, broken stone. - also *ratf*.

ردشة *radʃa* /unit n, pl *-aat*/ piece of rubble.

ر د ع

ردع *radaɛ*↑ *(a)* /vt/ to deter. *ʈaalib bi-ʃaʃadd[i] ɛuquuba tirdaɛ il-mugrim* he demanded the severest punishment to deter the criminal. - vn *radɛ*; ava *raadiɛ*.

ر د ف

ردف *ridf* /n pl *ʃardaaf*/ **1** *[naut]* middle section (curved portion) of the rib of a boat. **2** hip.

رديف *ridiif* /n/ *[mil]* army reserve.

ردّف *raddif* /vt/ *[agric]* to bank up (certain types of crop planted on one side only of a ridge) with earth from the unused side of an adjacent ridge. - vn *tardiif*; ava/pva *miraddif*.

رادف *raadif*↑ /vt/ to be synonymous with. - ava *miraadif*.

مرادف *muraadif* /n pl *-aat*/ synonym.

ر د م

ردم *radam (i)* /vt and vi/ to fill in, or cover, with a layer of earth. *yḥuṭṭ[i] ʃwayyit bizra w-yirdim ɛaleehum* he puts in some seeds and covers them over. *radam iz-ziriiba* he put down a fresh layer of earth in the byre. *radamu l-birak* they filled in the ponds. - vn *radm*; ava *raadim*; pva *marduum*.

¶ *ʃirdim* /fem *ʃirdimi*, pl *ʃirdimu*/ to hell with it! forget it!

ردم *radm* /n/ filling of earth, rubble or the like.

اتردم *ʃitradam* /vi/ to be filled in, or covered, with a layer of earth. - iva *mitridim*.

انردم *ʃinradam* = *ʃitradam*.

ر د ن

مردن *mardin, mardan* /n pl *maraadin*/ **1** *[text]* spindle. **2** long poker used to arrange pieces in a furnace.

ر د ن ج -

ريدنجوت *ridingoot* <Fr *redingote*> /n/ tail-coat.

ر د و see ر د ى : *radaawa*

ر د ى

ردى *rada (i)* /vi/ **1** to run and leave a stain. *ʃil-ʃalwaan ma-titʁisil-f[i] sawa laḥsan tirdi ɛala baɛḍ* (different) colours should not be washed together lest they run and stain one another. **2** to leave an undesirable mark or taint. *ʃaxlaaq-u radit ɛala ʃaṣḥaab-u* his (evil) morals reflected on his friends. - vn *radayaan*; ava *raadi, raadi*; pva *mardi*.

ردىء *radi* /adj pl *rudaay*/ vile, base. ‖ *ʃil-ɛeen ir-radiyya* the evil eye. - *zayy il-ɛamal ir-radi* like (the consequences of) an evil deed (of something unwanted but inescapable), as in *ʃir-raagil da zayy il-ɛamal ir-radi* the man's like a leech! - *ʃil-ʃaṣl ir-radi yirdi ɛala ṣaḥb-u [prov]* ≈ bad blood will show, what's in the blood cannot be removed.

رداءة *radaaʃa* /n/ **1** vileness, baseness, meaness. **2** low quality. *radaaʃit iṣ-ṣanf[i] txalli z-zubuun ma-yirgaɛ-f[i] taani* the poor quality of the goods stops the customer from coming back.

رداوة *radaawa*↓ = *radaaʃa*.

ردىء *radiiʃ*↑ /adj/ = *radi*.

ر د ى ت -

رديتير *radyateer* <Fr> /n pl *-aat*/ *[auto]* radiator.

ر د ى ه

روديه *rudeeh* <Fr *roder*> /n/ *[mech]* running-in, grinding-in.

ر د ى و

راديو *radyu, radyu* <Fr> /n pl *radyuhaat, radyuhaat, radaawi*↓/ radio. *simiɛt-u fir-radyu* I heard it on the radio. ‖ *baaliɛ radyu* ≈ very talkative.

ر ذ ذ see ر ز ز [2]

ر ذ ل see ر ز ل

ر ز ا ز
رزاز *razaaz* <Fr *rosace*> /n pl *-aat/ [elec]* ceiling-rose.

ر ز ب
مرزاب *mirzaab* /n pl *maraziib/* gouge.
مرزبّة *mirzabba* /n pl *maraazib/* sledge hammer. ‖*wabuur mirzabba* pile-driver.

ر ز ب ي ت
روزبيت *ruzbeet, ruzbiit* <It *rispetto*> /n/ **1** thing or things held in reserve, resource to fall back on. *xalli l-ʔirfeen dool ʕandak ruzbeet* keep this money with you in case of need. **2** one who is a permanent fixture in a place. *xallii-k ʃinta ruzbeet fil-maktab* you stay put in the office and hold the fort. - also *rusbeet, rusbiit.*

ر ز ب ي ف
رزبيف *ruzbiif* <Engl> /n/ roast beef.

ر ز ت ت
روزتّة *ruzitta* <It *morsetto*> /n pl *-aat/ [elec]* terminal box, fuse-box (of an electric motor).

ر ز ر ز
مرزرز *mirazraz* /adj/ large, heavy and cumbersome. *ʧuuba mrazraza* a hulking great stone.

[1] ر ز ز
رزّ *ruzz* /coll n/ rice. *ruzz[a] ʃabyaq* (1) hulled rice. (2) plain cooked rice. *waraq ruzz* rice paper. ‖*zayy ir-ruzz* in great quantities, as in *kaan fii ʕasaakir zayy ir-ruzz* there were policemen everywhere. - *bi-yaakul ruzz' (b-laban) maʕa l-malayka* (he's eating rice pudding with the angels) ≈ he's sleeping soundly.
رزّة *ruzza[1]* /unit n, pl *-aat/* a grain of rice. ‖*ɣurzit ir-ruzza* moss-stitch (in knitting).
رزّاية *ruzzaaya* /unit n, pl *-aat/* a grain of rice.

[2] (ر ز ز)
رزّة *razza, ruzza[2]* /n pl *ruzaz/* **1** hasp of a door. **2** *[joc]* resounding slap on the back of the neck.
رذاذ *razaaz[1]* /n/ fine spray. *ʃin-naʧar naazil razaaz* it's raining lightly, it's drizzling.

[3] ر ز ز see ر ز ا ز : *razaaz*

ر ز س ت -
رزستانس *rizistans* <Fr> /n pl *-aat/ [elec]* **1** resistance. **2** resistor.

ر ز ع
رزع *razaʕ (a)* /vt/ **1** to slam, bang. *razaʕit il-baab* she slammed the door. *razaʕt is-sammaaʕa* I slammed down the receiver. **2** to deal (a hard blow or the like) to. *razaʕ-u kaff* he gave him a hard slap. *razaʕt-u ʕalqa* I gave him a hell of a beating. *raaḥ raziʕ-ni sabaʕ taman ʃakaawi* he went and clapped seven or eight complaints on me. ‖*razaʕ miʃwaar* to tackle a (tiresome) errand, as in *ḥ-arzaʕ il-miʃwaar lil-qalʕa* I'm in for that damned trip to the Citadel! **3** to keep (s.o.) hanging about. *razaʕ-ni ʕal-qahwa saʕteen* he kept me kicking my heels in the café two hours. *ʃana marzuuʕ ʕala l-maḥaṭṭa baqaa-li ʃarbaʕ saʕaat zaman* I've been stuck at the station four whole hours! - vn *razʕ, razaʕaan*; ava *raaziʕ*; pva *marzuuʕ*.
اترزع *ʃitrazaʕ* /vi/ **1** to be slammed, be banged. **2** to be dealt a hard blow. **3** to be kept waiting. - iva *mitriziʕ*.
انرزع *ʃinrazaʕ* = *ʃitrazaʕ*. - iva *minriziʕ*.
رزّع *razzaʕ* /vt/ to slam, bang (a number of things, or one thing a number of times). - vn *tarziiʕ*; ava *mirazzaʕ*.
اترزّع *ʃitrazzaʕ* /vi/ passive of *razzaʕ*. - iva *mitrazzaʕ*.

ر ز ق
رزق *razaq (u)* /vt/ to provide, provide for (of God). *ya rabb' ʃurzuq-ni* O Lord, sustain me! *rabb-i-na dayman bi-yurzuq-na bi-lli yʕaṭṭal-na* God always sends something to delay us. *daʕeet allaah yurzuq-hum bi-niila* I prayed God to bring disaster on them. ‖*ʃana miʃ marzuuq biik* I don't rely for my living on you (but on God), I can survive without you. - *ʃeef yiʕmil il-ḥasuud fil-marzuuq [prov]* what can the envious do against one blessed by God with wealth? - /the literary passive form occurs in unelevated speech/ *turzaq* you will be provided for (by God), something will turn up. *kull-u b-yurzaq* all things are provided for by God. *ruziqat bi-walad* a son was born to her. - ava *raaziq*; pva *marzuuq*.
رازق *raaziq* /n/ Provider (epithet of God).
رزق *rizq* /n pl *ʃarzaaq/* what God provides for man as his sustenance, livelihood, means of support. *ʃana b-aʕtimid ʕala r-rizq* I depend on what God sends. *ʃil-maksab da mas ʃalit rizq* whether one makes a profit is up to God. *ʃir-rizq' ktiir il-yomeen dool* business is booming these days. *ma-maʕii-ʃ rizq' ʃaʕaʃʃa bii* I've nothing to eat for supper. *rizq-u waasiʕ* he is prosperous. *ʃil-baḥr' rizq-u ktiir* the fruits of the sea are many. ‖*maʕaak rizq* did you make a catch? (from one fisherman to another). - *ʃahu rizq* it's a way of earning a living, it's something to keep body and soul together, as in *b-alimm' sabaaris wi-ʃahu rizq* I pick up cigarette

ends - it's a living. - *ʔinta w-rizq-ak* it's all up to your luck. - *kull' waaḥid wi-luu rizq* or *ʔir-rizq'* (or *ʔil-ʔarzaaq) ɛal-alla* God provides for all. - *ʔir-rizq' yḥibb il-laḥlaḥa* (or *il-xiffiya*) *[prov]* God helps those who help themselves.

أرزقي *ʔarzuqi, ʔarzaqi* /n pl *-yya*/ **1** one who lives from hand to mouth, one who does not know what his next day's job will be. **2** one always on the look-out for money, one who will do anything for a quick buck. *fannaniin ʔarzuqiyya* artists who prostitute their art.

رزّاق *razzaaq* /n/ Provider (epithet of God). *ya fattaaḥ ya ɛaliim ya razzaaq ya kariim* expression used upon beginning work in the morning.

مرتزق *murtazaq'* /n pl *murtazaqa*/ mercenary.

استرزق *ʔistarzaq* /vi/ to scrape together a precarious living. *bi-tistarzaq min ʔeeh il-yomeen dool* how are you keeping body and soul together these days? - vn *ʔistirzaaq*; ava *mistarzaq*.

ر ز ل

ارزل، ارذل *ʔirzal* /imper: fem *ʔirzali*, pl *ʔirzalu*/ behave yourself! stop this impertinence!

رزل، رذل *rizil* /adj */ impertinent, insolent.

أرزل، أرذل *ʔarzal* /el/ more/most impertinent.

رزاله، رذالة *razaala* /n/ impertinence, insolence. ‖ *wa-law fiiha razaala* excuse my rudeness, but ..., as in *mumkin tinawil-ni f-fanṭa di wa-law fiiha razaala* excuse my rudeness, but could you hand me that suitcase, *qul-li baqa yaɛni wa-law fiiha razaala ʔaɛmil-bu ʔeeh* so tell me, if you excuse my asking, just what am I supposed to do with it?

رزيل، رذيل *raziil* /adj pl *ruzala*/ = *rizil*.

رزيلة، رذيلة *raziila* /n pl *razaayil, razaaʔil'*/ vice.

رزّل *razzil* **1** /vt/ to reprimand. **2** /vi/ to behave impertinently. - vn *tarziil*; ava/pva *mirazzil*.

اترزّل *ʔitrazzil* /vi/ to be reprimanded. - iva *mitrazzil*.

اترازل *ʔitraazil* /vi/ to behave offensively or insolently. *bi-yitxaaniq maɛa z-zabaayin wi-yitraazil maɛa da w-maɛa da* he gets into quarrels with customers and is offensive to everyone. - ava *mitraazil*.

ارزلّ *ʔirzall* /vi/ to become impertiment or insolent. - ava *mirzill*.

استرزل، استرذل *ʔistarzil* **1** /vt/ to consider cheeky or impertinent. **2** /vi/ to behave in an impertinent manner. - vn *ʔistirzaal*; ava/pva *mistarzil*.

ر ز م

رزمة *ruzma* /n pl *-aat, ruzam*/ **1** ream (of paper). **2** skein.

ر ز ن

رزانه *razaana* /n/ self-composure, steadiness, gravity of demeanour.

رزين *raziin* /adj * and pl *ruzana*/ self-composed, steady, grave.

ر ز ن ا م

رزنامه *ruznaama* <P *roz-nâma*> /n/ *[obsol]* pensions department.

ر ز ى

رزى *raza (i)* /vt/ **1** to afflict. *rabb-i-na razaa-na bi-graan wiḥʃiin* God has afflicted us with bad neighbours. **2** to dump. *ʔirzi l-walad ɛak-kursi* dump the boy on the chair. - vn *razayaan*; ava *raazi*; ava *marzi*.

رزيّة *raziyya* /n pl *razaaya*/ calamity, disaster. ‖ *ya raziyya* ≈ you devil!

اترزى *ʔitraza* /vi/ **1** to be afflicted. **2** *[deris]* to stay put. - ava/iva *mitrizi*.

رازى *raaza* /vt/ to nag, pester. *xallii-k kuwayyis wi-balaaʃ tiraazi ʔumm-ak* be good and don't pester your mother. - vn *miraziyya*; ava *miraazi*.

اترازى *ʔitraaza* /vi/ to be pestered, be nagged. - iva *mitraazi*.

ارترزى *ʔirtaza* /vi/ *[deris]* to stay put. *ʔirtizi ʔuqɛud* why on earth don't you sit down! - iva *mirtizi*.

ر س ب

رسب *rasab (i, u)* /vi/ **1** to fail (in an examination). *xad l-imtiḥaan wi-rasab* he took the exam and failed. ‖ *ʃaalib raasib [acad]* university student who has failed in more than two of a year's subjects and must therefore repeat a year. - *ʔir-rusuub il-waẓiifi* the overlooking of a group of civil servants in respect of salary increases. **2**↑ to settle as a deposit, sink to the bottom. - vn *rusuub*; ava *raasib*.

رسوبى *rusuubi* /adj/ sedimentary.

راسب *raasib* /n pl *rawaasib*/ residue, precipitate, sediment, deposit.

رسّب *rassib* /vt/ **1** to cause to settle as sediment, precipitate. *ʔil-kubbaaya bi-trassib il-wasaaxa lli fil-mayya* the anti-syphon trap allows the dirt in the water to settle. **2** to plate (metal). — /vi/ **3** to settle as sediment, form deposits. - vn *tarsiib*; ava/pva *mirassib*.

ترسيب *tarsiib* /n pl *-aat*/ sediment, deposit.

اترسّب *ʔitrassib* /vi/ to be deposited as sediment. - ava/iva *mitrassib*.

ر س ب س –

رسبسيون *risibsiyoon'* <Fr> /n pl *-aat*/ **1** reception desk. **2** room for guests, guests' parlour.

ر س ب ي ت
روسبيت *rusbeet, rusbiit* <It *rispetto*> /n/ **1** thing or things held in reserve, resource to fall back on. *xalli l-qirfeen dool ɛandak rusbeet* keep this money with you in case of need. **2** one who is a permanent fixture in a place. *xallii-k ʕinta rusbeet fil-maktab* you stay put in the office and hold the fort. - also *ruzbeet, ruzbiit*.

ر س ت
راست *rast* <P *râst*> /n/ *[mus]* (the note) middle C. **2** mode in Arabic music beginning on middle C (and having E half flat and B half flat).

ر س ت ق
رستق *rastaq* /vt/ to fix up, settle. *rastaqt il-mawduuɛ maɛaa* I arranged everything with him, I settled the affair with him. *rastaqt-i-lu waẓiifa* I fixed him up with a job. - vn *rastaqa*; ava/pva *mirastaq*.
اترستق *ʕitrastaq* /vi/ to be or become arranged, fixed up, settled or established. *ɛaawiz ʕaḥawwiʃ-li ʕirfeen kiwayyisiin ɛaʃaan ʕatrastaq w-akammil nuṣṣ' diin-i* I want to save a bit of money so that I can settle down and marry. - ava/iva *mitrastaq*.

ر س ت و
رستو *rustu* <It *arrosto*> /n/ *[cook]* **1** joint of meat for roasting. **2** roast meat. *firaax rustu* roast chicken.

ر س ح see س ر ح : *marsaḥ*

ر س خ
رسخ *rasax (u)* /vi/ to become established, take root, become entrenched. - vn *rasaxaan, rusuux*; ava *raasix*.
رسّخ *rassax* /vt/ to implant, establish, impress deeply. - vn *tarsiix*; ava/pva *mirassax*.

ر س ر ا س
رسراس *rasraas* /n/ adhesive made of a yellow powder and used especially for leather.

ر س غ
رسغ *rusɣ* /n pl *ʕarsaaɣ, ʕarsuɣ*/ wrist.

ر س ل
رسالة *risaala* /n pl *-aat, rasaaʕil, rasaayil*/ **1** consignment of merchandise. **2a** message. *ɛaawiz ʕasib-lu rsaala* I want to leave a message for him. **2b** *[Chr]* epistle. **3** *[acad]* thesis, dissertation. **4** calling, vocation, mission. *ʕil-ʕumuuma rsaala* motherhood is a vocation. *ʕaddeet risalt-ak fil-ḥayaah* you've fulfilled your mission in life.
رسول *rasuul* /n pl *rusul*/ **1** messenger. *ma ɛala r-rasuul ʕilla l-balaaɣ* a messenger's function is only to deliver a message. *ʕir-rasuul [Isl]* the Prophet Muhammad. **2** apostle. *ɛiid ir-rusul [Chr]* Feast of the Apostles, celebrated on 6th of Abib. *ṣoom ir-rusul [Chr]* fast observed from Pentecost till the Feast of the Apostles.
رسولي *rasuuli* /adj */ *[Chr]* apostolic.
مرسال *mirsaal* /n pl *marasiil*/ messenger (deliverer of a personal, rather than official, message). *goz-ha baɛat laha mirsaal tiqabl-u ɛal-maḥaṭṭa* her husband sent someone to tell her to meet him at the station. *ʕil-mirsaal la yitfitim wala yithaan [prov]* a messenger is not to be abused or molested.
راسل *raasil*[1] /n */ *[communic]* sender (i.e. of a letter, telegram etc).
رسّل *rassil*↓ /vt/ to send, convey. *rassil ig-gawaab ɛal-beet* send the letter to the house. - vn *tarsiil*; ava/pva *mirassil*.
اترسّل *ʕitrassil*↓ /vi/ to be sent. - iva *mitrassil*.
راسل *raasil*[2] /vt/ to exchange correspondence with. - vn *murasla, mırasla*; ava *miraasil*.
مراسلة *murasla* /masc n pl *-aat/ [mil]* orderly, batman.
مراسلة *mirasla* /n pl *-aat*/ **1** correspondence, communication. **2** carrier-pigeon.
مراسل *muraasil* /n */ press correspondent.
اتراسل *ʕitraasil* /vi/ to correspond with one another. - ava *mitraasil*.
أرسل *ʕarsal (i)* /vt/ **1** *[communic]* to send, transmit (a telegram, radio signal etc.). **2**↑ to send. - vn *ʕirsaal*; ava *mursil*; pva *mursal*.
إرساليّة *ʕirsaliyya* /n pl *-aat*/ **1** consignment, shipment. **2** *[communic]* mail item. *ʕirsaliyyaat ḥukumiyya* government mail. **3** *[Chr]* mission.
مرسل *mursal: ʕil-mursal ʕilee [communic]* the addressee.

ر س م
رسم *rasam (i)* /vt/ **1a** to sketch, draw, paint. *rasamt-i-lu ʕiskitʃ* I drew a sketch for him. *faatiḥ kababgi w-raasim ḥamaama bin-niyoon ɛal-maḥall* he sells kebab and has had a picture of a dove done in neon over the shop. **1b** to form, shape. *bi-yḥuṭṭu ḥitat il-ɛagiin fiṣ-ṣaag wi-yirsimuu-ha ʃureek* they put the pieces of dough on the sheet and shape them like *ʃureek*. **2** to sketch out, draft out, plan. *rasam iṣ-ṣafḥa* he drew up the page (dummy). *kull' huguum kaan marsuum* each attack was carefully planned. **3** to dress up, make up. *tiqɛud tırsım fi-nafs-a-ha saɛteen* she spends ages painting her face.

waad marsuum an over-dressed lad. **4** *[Chr]* to ordain. - vn *rasm*; ava *raasim*; pva *marsuum*.

¶ *rasam ɛala* to have designs on. *ʃaxuu-k b-yirsim ɛala l-bint*^{i} *di* your brother has designs on that girl. *tilaqii bi-yirsim ɛal-filuus* he's probably trying to think of ways to get the money.

رسم *rasm* /n/ **1** /pl *rusumaat, rusuum*↑/ **1a** picture, sketch, drawing, painting. ‖ *dabbuus rasm* drawing-pin. - *rusuum mutaḥarrika* animated cartoons. - *rasm*^{i} *ɣalb* cardiograph. - *rasm*^{i} *bayaani* graph. **1b** pattern, design. *ɣumaaʃ fii rusumaat beeḍa* cloth with white patterns. **1c** design, plan. **2** /pl *rusuum*/ **2a** fee, due, charge. *rasm iftiraak* (or *ɛuḍwiyya*) membership fee. **2b** formality, etiquette.

رسمة *rasma*^{1} /n pl *-aat*/ **1** instance noun of *rasm*. **2** pattern or model to be copied.

رسمي *rasmi* /adj */ official. *siɛr*^{i} *rasmi* official exchange rate (for currency). *mustaxrag rasmi* official transcript. *ʃigraʃaat rasmiyya* official procedures. *waqt il-ɛamal ir-rasmi* official working hours.

¶ *rasmiyyan* /adv/ officially.

رسميّات *rasmiyyaat* /pl n/ formalities, etiquette, protocol, ceremonial.

راسمة *rasma*^{2} /n pl *-aat, rawaasim*/ tool-carrier (on a lathe).

مرسوم *marsuum* **1** /n pl *marasiim*/ decree, edict. **2** *marasiim* /pl n/ protocol, prescribed procedure.

رسامة *risaama, rasaama* /n/ *[Chr]* ordination.

رسّام *rassaam* /n */ **1** artist. **2** designer, draftsman.

رسّيم *rassiim* /adj pl *rassiima*/ **1** good at drawing. **2** scheming.

مرسم *marsam*↑ /n pl *maraasim*/ (artist's) studio.

مراسم *maraasim* /pl n/ protocol.

اترسم *ʔitrasam* /vi/ passive of *rasam*. - iva *mitrisim*.

ر س م ل

رأسمال، راسمال *rismaal, rasmaal, raʔsimaal*↑ /n/ **1** capital. **2** *[rur]* pigeon droppings (used as fruit tree manure).

رأسمالي *raʔsimaali*↑ **1** /adj */ capitalist, capitalistic. **2** /n */ a capitalist.

رأسماليّة *raʔsimaliyya*↑ /n/ capitalism.

رسمل *rasmil* /vt/ to finance. - ava/pva *mirasmil*.

اترسمل *ʔitrasmil* /vi/ **1** to be financed, amass capital. **2** to settle down in a job, gain status. - ava/iva *mitrasmil*.

ر س ي ^{1}

رسى *risi (a)* /vi/ **1a** to rest, be settled. *ʔil-ɛarabiyya kull-a-ha b-tirsi ɛala f-faseeh* the whole car rests on the chassis. **1b** to come to rest, settle. *risiina ɛala ḥall* we settled on a solution. *ʔit-taman illi risi ɛalee ʔil-mazaad* the price at which (the article) was knocked down at the auction. *risi ɛalee ʔil-ɛaṭa* the tender fell to him. **2** to dock, come to harbour. ‖ *risi ɛala barr* to come to a firm decision. - vn *rasayaan*; ava *raasi*.

راسي *raasi* /adj */ **1** sensible, steady, reliable. **2** in the know, *au courant*.

مرسى *marsa* /n pl *maraasi*/ anchorage, harbour.

مرساة *mirsa* /n pl *maraasi*/ *[naut]* grapnel.

رسّى *rassa* /vt/ **1** to award (a tender). *rassu ɛalee ʔil-ɛaṭa* they awarded him the tender. **2** to explain to, put in the picture. - vn *tarsiyya*; ava/pva *mirassi*.

اترسّى *ʔitrassa* /vi/ passive of *rassa*. - iva *mitrassi*.

ر س ي ^{2}

رثى *rasa*↑ *(i)* /vt/ to lament, elegize (the dead). - vn *risa*; ava *raasi*; pva *marsi*.

رثاء *risaaʃ* /n/ elegy.

ر س ي ا

روسيا *rusya* /prop n/ Russia. see further under ر و س ^{2}

ر ش ت

رشتة *rišta* <P *rishta*> /n/ type of pasta.

ر ش ت ت

روشتّة *rušitta* <It *ricetta*> /n pl *-aat*/ prescription (for medicine).

ر ش ح

رشح *raʃaḥ (a)* /vi/ to filter, filtrate. *ʔil-mayya raʃaḥit min is-saqf* the water seeped through the roof. - vn *raʃḥ*; ava *raaʃiḥ*.

رشح *raʃḥ* /n/ runniness of the nose.

مرشحة *marʃaḥa* /n pl *maraaʃiḥ*/ pack-saddle, working-saddle (of donkey).

رشّح *raʃʃaḥ* /vt/ **1** to filter. *waraq tarʃiiḥ* filter paper. **2** to nominate, put forward as a candidate. *kull*^{i} *ḥizb*^{i} *yraʃʃaḥ nuwwaab* each party nominates deputies. *ʔaqall*^{i} *min is-sinn*^{i} *da ma-yiqdar-f*^{i} *yraʃʃaḥ nafs-u* under that age he cannot put himself forward as a candidate. — /vi/ **3** to drain, let out seepage. **4** to run (of the nose). - vn *tarʃiiḥ*; ava/pva *miraʃʃaḥ*.

مرشّح *muraʃʃaḥ* /n */ nominee, candidate.

اترشّح *ʔitraʃʃaḥ* /vi/ **1** to be filtered. **2** to be nominated, be put forward as a candidate. - iva *mitraʃʃaḥ*.

ر ش د ^{1}

رشد *ruʃd* /n/ maturity (of mind). *sinn ir-ruʃd [leg]*

majority, coming of age.
رسيد *rafiid* **1** /n/ Discerner (epithet of God). **2** /prop n/ Rosetta, a town on the western branch of the Nile near the coast. *ḥagar rafiid* the Rosetta Stone.
رسيدى *rafiidi* **1** /adj/ of or pertaining to Rosetta. **2** /n pl *rafayda*/ a Rosettan.
أرشد *ʕarfad*[1] /el/ more/most mature. *ʕarfad ʕixwaat-u* the eldest of his brothers and sisters.
أرسد *ʕarfad*[2] /vt/ **1**↑ to guide. **2** *[naut]* to pilot. - vn *ʕirfaad*; ava *murfid*.
إرسادات *ʕirfadaat* /pl n/ instructions.
إرشادى *ʕirfaadi* /adj/ pertaining to guidance.
مرشد *murfid* /n */ **1** guide. **2** *[naut]* pilot.
مرسدة *murfida* /n pl *-aat*/ Girl Guide.
استرسد *ʕistarfid* /vi/ **1** to ask for guidance. **2** to rely for guidance. *ʕana b-astarfid bi-lli tɛamal ɋabl' kida* I follow the precedents. - vn *ʕistirfaad*; ava *mistarfid*.

ر ش د [2]
رشاد *rafaad* /n/ garden cress, tongue-grass (Lepidium sativum).

ر ش ر ش
رشرش *rafraf* /vt/ to sprinkle all over or repeatedly. - vn *rafrafa*; ava/pva *mirafraf*.
اترشرش *ʕitrafraf* /vi/ to be sprinkled all over or repeatedly. - iva *mitrafraf*.

ر ش ش
رش *raff*[1] *(u)* /vt/ **1** to sprinkle, strew, spray (s.th., i.e. on another). *raffit ɛala nafs-a-ha kuuz mayya* she sprinkled a mugful of water over herself. *bi-nruff*[a] *ɛala wiff' kull' kaḫkaaya sukkar budra* we sprinkle icing sugar over the top of each piece of *kaḫk*. ‖ *tiruff il-malḥ' ma-yinzil-f* (if you scatter salt it won't fall) ≈ there isn't room to swing a cat. *-looḫ ir-ṙaff [naut]* washboard, splashboard. **2** to sprinkle, strew, spray (s.th., i.e. with another). *ʕil-baladiyya bi-truff if-fawaariɛ* the municipality sprinkles the streets. *ṣawaani marfuuʃa b-radda* trays sprinkled with bran. ‖ *ʕilli yruff-i-na bil-mayya bi-nruff-u bid-damm* (one who sprinkles us with water we sprinkle with blood) our revenge is terrible. **3** to scatter as largesse, distribute open-handedly. *ʕil-muɛiid bi-yruff*[a] *ɛaṭ-ṭalaba nimar* the instructor showers the students with (good) marks. *raff' ɋahwa w-ʃaay* he bought a round of coffee and tea (for all). - vn *raff*; ava *raafif*; pva *marfuuf*.
رش *raff*[2] /coll n/ lead shot. *bunduɋiyya raff'* shotgun.
رشة *raffa* /n pl *-aat*/ **1** /inst n/ a spray, a sprinkling, a scattering. **2** /unit n/ a piece of lead shot, a pellet.
رشاية *raffaaya* = *raffa* 2.
رشاش *raffaaf* /n pl *-aat*/ spray nozzle (e.g., for a watering-can). *madfaɛ raffaaf* machine-gun.
رشاشة *raffaafa* /n pl *-aat*/ **1a** spray, spray-gun, spraying machine. *raffaafit ʕasfalt* asphalt-sprayer. **1b** watering-can. **2** machine-gun. **3** *[naut]* blade of an oar.
اترش *ʕitraff* /vi/ to be sprinkled, be strewn, be sprayed (on s.th. or with s.th.). - iva *mitraff*.

ر ش ق [1]
رشق *rafaɋ (a)* /vt/ to insert with force, thrust, ram. *rafaɋ il-maṭwa fif-ʃagara* he drove the knife into the tree. *rafaɋt' snaan-i fiiha* I sank my teeth into it. - vn *rafɋ*; ava *raafiɋ*; pva *marfuuɋ*.
اترشق *ʕitrafaɋ* /vi/ to be inserted with force, be thrust, be rammed. - iva *mitrifiɋ*.
انرشق *ʕinrafaɋ* = *ʕitrafaɋ*. - iva *minrifiɋ*.

ر ش ق [2]
رشاقة *rafaaɋa*↑, *rafaaqa*↑ /n/ **1** slimness, slenderness. **2** gracefulness, elegance.
رشيق *rafiiɋ*↑, *rafiiq*↑ /adj/ **1** slim, slender. **2** graceful, elegant.

ر ش ك ت ت
رشكتة *rafkitta* <It *raschietto*> /n pl *-aat*/ de-burring tool.

ر ش م [1]
رشم *rafam (i) [Chr]* **1** /vi/ to make the sign of the cross. **2** /vt/ to mark with the sign of the cross. - vn *rafm*; ava *raafim*; pva *marfuum*.
رشم *rafm* /n pl *rufuum*/ **1** *[Chr]* sign of the cross. **2** (also *rafm il-mayya*) *[naut]* water-line on a boat.
رشمة *rafma* /inst n, pl *-aat*/ a making of the sign of the cross.
اترشم *ʕitrafam*[1] /vi/ *[Chr]* to be marked with the sign of the cross. - iva *mitrifim*.
انرشم *ʕinrafam* = *ʕitrafam*. - iva *minrifim*.

ر ش م [2]
راشمة *rafma* /n pl *-aat*/ rust-scraper.
راشم *raafim* /vt/ to remove (rust), clean (s.th.) of rust. - vn *mirafma*; ava *miraafim*.
اتراشم *ʕitraafim* /vi/ to be cleaned of rust. - iva *mitraafim*.

ر ش م [3]
مرشوم *marfuum* /adj/ laden, full, crowded, packed.
اترشم *ʕitrafam*[2] /vi/ to become laden. - iva *mitrifim*.

رسم *raffim* /vt/ to pack, load, cram. *raffim il-maḥfaẓa fluus* he stuffed the wallet with money. - vn *tarfiim*; ava/pva *miraffim*.

اترشّم *ʔitraffim* /vi/ to be laden with, be crowded with. *ʔil-ʔutubiis mitraffim naas* the bus is packed with people. - iva *mitraffim*.

ر ش م [4]

رسمة *rafma* <T *reşme*> /n pl -*aat*, *rufam*, *rafaayim*/ **1** halter. **2** bridle (of a draught animal).

ر ش ن see ر ا ش ن : *raafin*

ر ش و see ر ش ى : *rafwa*, *rafwa*

ر ش ى

رشا *rafa* or *rafa ʔ(i)* **1** /vt/ to bribe. *fii muwaẓẓaf yiwaqqaf il-waraq ɛafaan tirfii* there are officials who delay the papers so that you will bribe them. **2** /vi/ to promise to make a votive offering. *ʔirfu tiffu [prov]* (carry out your) promise to make a votive offering (which will be distributed among the needy) and you'll be O.K. - vn *rafw*, *rafw*; ava *raafi*, *raafi*; pva *marfi*.

رشوة *rafwa* or *rafwa* /n pl *rafaawi*, *rafaawi*/ **1** bribe. **2** votive offering (to a saint). *ya ḥuseen lik ir-rafwa ʔin nagaḥt* If I pass my exam I'll bring you an offering, Hussein.

ارتشى *ʔitrafa* /vi/ to be bribed. - iva *mitrifi*.

ارتشى *ʔirtafa* [1] /vi/ to take a bribe or bribes. *ʔana ɛaayiz waaḥid murtafi yiigi yiqniɛ-ni huwwa b-yirtifi leeh* I want a taker of bribes to come and give me a convincing reason why he takes them. - ava *mirtifi*, *murtafi*.

مرتشى *murtafi* /n */ one who habitually takes bribes.

ر ص د

رصد *raṣad* [1] *(u)* /vt/ **1** to make up (an account), keep account of, take stock of. *lagnit raṣd id-daragaat* committee for the recording of (examination) grades. **2** to chart (on a map). *bi-ngiib il-manaasiib wi-b-nurṣud-ha ɛal-xariiṭa* we get the ground-levels and chart them on the map. **3** to watch for, lie in wait for. **4** to observe, keep watch on. - vn *raṣd*; ava *raaṣid*; pva *marṣuud*.

رصد *raṣd* /n pl *ʔarṣaad*/ observation. *ʔarṣaad gawwiyya* meteorological observations.

رصد *raṣad* [2] /n pl *ʔarṣaad*/ talisman.

رصيد *raṣiid* /n pl *ʔarṣida*/ money or goods in hand, stock, balance. *ʃiik min ɣeer raṣiid* an uncovered cheque.

مرصد *marṣad* /n pl *maraaṣid*/ observatory.

مرصاد *mirṣaad: bil-mirṣaad* on the lookout, as in *kaan ɑaɛid-li bil-mirṣaad* he was lying in wait for me.

اترصد *ʔitraṣad* /vi/ **1** to be charted (on a map). **2** to be put under a spell. - iva *mitriṣid*.

رصّد *raṣṣad* /vt/ to balance (an account). - vn *tarṣiid*; ava/pva *miraṣṣad*.

اترصّد *ʔitraṣṣad* /vi/ **1** to lie in wait. **2** to be balanced (of an account). - ava/iva *mitraṣṣad*.

استرصد *ʔistarṣad* /vt/ to waylay, lie in wait for. - ava *mistarṣad*.

ر ص ر ص [1]

رصرص *raṣraṣ* [1] /vi/ to become extremely cold. - vn *raṣraṣa*; ava *miraṣraṣ*.

رصريص *ruṣreeṣ* /n/ intense cold. - /adjectivally/ *ʔid-dunya ruṣreeṣ* it's freezing cold.

ر ص ر ص [2]

رصرص *raṣraṣ* [2] /vt/ to stack. - vn *raṣraṣa*; ava *miraṣraṣ*.

اترصرص *ʔitraṣraṣ* /vi/ to be stacked. - iva *mitraṣraṣ*.

ر ص ص [1]

رصّ *raṣṣ (u)* /vt/ **1** to place in an orderly arrangement, line up, stack, stow. *raṣṣenaa-hum fi-ṣufuuf* we arranged them in rows. *ruṣṣ ik-kutub ɛal-ʔurfuf* set out the books on the shelves! *niruṣṣ-u raaq laḥma w-raaq ruqaaq* we stack it with a layer of meat followed by a layer of pastry. *raṣṣeet il-malik wil-waziir wil-fileen* I set out the king, the queen and the two bishops (on the chess board). *raṣṣ il-ḥagar* to stack the tobacco-holder of a water-pipe with a layer of tobacco and one of charcoal. **2** to list, enumerate, repeat. *nizlit raṣṣ* [i] *ʃtiima fii* she set about him with a stream of insults. *ɑaɛad yiruṣṣ* [i] *fil-qawaniin* he went on enumerating the laws. ‖ *raṣṣeet ɛaleehum it-tamaasi* I said good evening to each of them in turn. - vn *raṣṣ*; ava *raaṣiṣ*; pva *marṣuuṣ*.

رصّة *raṣṣa* /n pl *-aat*/ **1** stack, pile. **2** layer. **3** lay-out (e.g., of pieces on a games-board).

اترصّ *ʔitraṣṣ* /vi/ to be placed in an orderly arrangement, be lined up, be stacked. - iva *mitraṣṣ*.

رصّص *raṣṣaṣ* /vt/ to place (a number of things) in an orderly arrangement, line up (a number of things, in several rows), stack (a number of things, in several stacks). *raṣṣaṣt il-ɛasaakir* I set out the pawns (on the chess-board). - vn *tarṣiiṣ*; ava/pva *miraṣṣaṣ*.

اترصّص *ʔitraṣṣaṣ* /vi/ to be arranged in several rows, stacks, etc. *fil-ʔisbitalya kunna mitraṣṣaṣiin zayy il-ɣanam il-madbuuḥa* in the hospital we were laid out in rows like slaughtered sheep. *ʔid-daftarxaana di kull-a-ha mitraṣṣaṣa f-nafuux-i* I have the arrangement

of the whole archive in my head. - iva *mitraṣṣaṣ*.
ارتصّ *ʔirtaṣṣ* /vi/ to line up. *ʔirtaṣṣu ʠuddaam il-baab* line up in front of the door! - ava *mirtaṣṣ*.

ر ص ص [2]
رصاص *ruṣaaṣ* **1** /n/ lead. *ʠalam ruṣaaṣ* a lead pencil. ‖*bi-yirsim il-ʔiskitf' bir-ruṣaaṣ* he draws the sketch in pencil. **2** /coll n/ bullet(s). *ʔeeh raʔy-ak fi-kalaam zayy ir-ruṣaaṣ - wi-ʔeeh raʔy-ak fi-gitta zayy in-niḥaas* 'What do you think of words as (hard as) bullets?' 'Then what do you think of a body as (hard as) copper?' (of one who is impervious to any rebuke).
رصاصة *ruṣaaṣa* /unit n, pl *-aat*/ **1** a piece of lead. ‖*ruṣaaṣa sanda [naut]* plummet. **2** a bullet. ‖*ʕeen titdabb' fiiha ruṣaaṣa* see *ʔitdabb*. **3** a pencil lead.
رصاصي *ruṣaaṣi* /adj invar/ grey.

ر ص ع
رصّع *raṣṣaʕ* /vt/ to set, stud, inlay. *dahab miraṣṣaʕ bi-mgawharaat* gold set with gems. - vn *tarṣiiʕ*; ava/pva *miraṣṣaʕ*.
مرصّع *miraṣṣaʕ* /adj/ **1** fancy, inlaid, embellished. **2** *[mus]* embellished with accidentals (of a scale) as *ʕagam miraṣṣaʕ* or *siika mraṣṣaʕ*.
اترصّع *ʔitraṣṣaʕ* /vi/ to be set, be studded, be inlaid. - iva *mitraṣṣaʕ*.

ر ص ف
رصف *raṣaf (u)* /vt/ to pave, give a surface of gravel and asphalt to, macadamize. - vn *raṣf*; ava *raaṣif*; pva *marṣuuf*.
رصيف *raṣiif* /n pl *riṣifa, ʔirṣifa, ʔarṣifaˆ*/ **1** pavement, sidewalk. **2** quay, pier. **3** (railway) platform.

ر ض ر ض
رضرض *raḍraḍ* /vt/ to shake, rock, jolt. - vn *raḍraḍa*; ava/pva *miraḍraḍ*.
اترضرض *ʔitraḍraḍ* /vi/ to be shaken, be rocked, be jolted. - iva *mitraḍraḍ*.

ر ض ضِ
رضّ *raḍḍ (u)* /vt/ to bruise, crush. - vn *raḍaḍaan, raḍḍ*; ava *raaḍiḍ*; pva *marḍuuḍ*.
رضّ *raḍḍˆ* /n pl *ruḍuuḍ*/ bruise.
ارتضّ *ʔitraḍḍ* /vi/ to be bruised, be crushed. - iva *mitraḍḍ*.
انرضّ *ʔinraḍḍ* = *ʔitraḍḍ*. - iva *minraḍḍ*.

ر ض ع
رضع *raḍaʕ, riḍiʕ (a)* /vi/ to suckle, nurse (of a baby). *dool raḍʕiin ʕala baʕḍ* they were suckled at the same breast. ‖*ʔaxx' fir-riḍaaʕa* foster brother. - vn *riḍaaʕa, raḍʕ*; ava *raaḍiʕ*.
رضعة *raḍʕa* /inst n, pl *-aat*/ a feed (for a baby).
رضيع *raḍiiʕ* /adj/ suckling, unweaned (of an infant).
مرضعة *murḍiʕa* /n pl *-aat, maraaḍiʕ*/ **1** nursing mother. **2** wet-nurse.
رضّع *raḍḍaʕ* /vt/ **1** to suckle, feed with milk (naturally or artificially). *waddeet-u l-ʔumm-u traḍḍaʕ-u* I gave him to his mother to suckle him. **2** to cause to suckle. *raḍḍaʕit il-ʕigl* she took the calf (to its mother) to feed. - vn *tarḍiiʕ*; ava *miraḍḍaʕ*.
ارتضّع *ʔitraḍḍaʕ* /vi/ to be suckled, be fed with milk. - iva *mitraḍḍaʕ*.

ر ض و see ر ض ى : *raḍwa, raḍwaan*

ر ض ى
رضى *riḍi, riḍa [1] (a)* /vi/ **1** to be satisfied, be content. *raaḍi b-ʠaliil-i* I am content with the little I have, I'm easy to please. *ʔayyuha waḥda tirḍa biyya* any girl at all would be happy to have me. *ʠult aggawwiz-ha laakin ʔumm-i ma-kanit-f' raḍya biiha* I wanted to marry her but my mother didn't approve of her. ‖*ʔilli yirḍa b-ʠismit-u yirtaaḥ [prov]* he who accepts his lot is happy. - *ʔilli ma-yirḍa bil-xoox yirḍa b-ʃaraab-u [prov]* (he who doesn't accept the peach must accept its nectar) if one doesn't accept what one is first offered, one may have to be satisfied with something less later on. - *ʔana raaḍi w-ʔabuu-ha raaḍi w-ʔinta maa lak ya ʠaaḍi [prov]* rejoinder to a third party who interferes in an agreement. **2** /preverb/ to be willing (to do). *ma-rḍit-f' tiggawwiz-u* she would not marry him. *ma-ḥadd'-ʃ raaḍi yimḍii-lu l-waraʠ* no one will sign the papers for him. *sinaan-u mif raḍya tuʠaʕ* his teeth just will not fall out. *ʔil-ʠarnabiiṭa mif raḍya txuff if-fanṭa* the cauliflower won't go into the bag. - vn *riḍa*; ava *raaḍi*; pva *marḍi*. ¶ *riḍi ʕan* or *ʕala* to forgive, confer blessing. *rabb-i-na yirḍa ʕaleek* God bless you! *goz-ha riḍi ʕanha w-ṣaliḥ-ha* her husband forgave her and made up with her.
رضى *raḍa (i)* /vt/ to satisfy. *ʔiʕmil illi yirḍii-k* do as you see fit. ‖*yihdii-k yirḍii-k* expression inserted parenthetically into a narration to indicate that the speaker by that point regarded himself as having gone to great lengths (using expressions such as *ʔallaah yihdii-k* and *ʔallaah yirḍii-k*) to persuade, accommodate etc. the party with whom the reported interchange took place.
رضى *riḍa [2]* /n/ **1** contentment. *ḥalt-u riḍa* he lives a comfortable life. *riḍa ʕala kida* one is well enough content with that. *riḍa li-man yarḍa* (satisfaction comes

to the one who is easily satisfied) ≈ things could be worse (in reply to an enquiry after one's well-being). **2** male given name. ‖*ʈuul ɛumr-ak ya riḍa w-ʃinta kida* ≈ you can never change your ways.

رضوى *raḍwa* /n pl *-aat/ [magic]* ceremony performed to mollify the spirits possessing a person.

رضوان *raḍwaan* /prop n/ **1** male given name. **2** *[Isl]* name of the angel who guards the gate to Paradise. *gannit raḍwaan* Paradise itself.

رضّى *raḍḍa* /vt/ to appease, seek to please. -vn *tarḍiyya*; ava/pva *miraḍḍi*.

ترضية *tarḍiya* /n/ *[leg]* settlement.

اترضّى *ʃitraḍḍa* **1** /vt/ to appease, seek to please. **2** /vi/ to be appeased. -ava/iva *mitraḍḍi*.

راضى *raaḍa* /vt/ to mollify, appease, soothe. *raḍii-ha b-kilma* say something to stop her being angry. *raḍeet xaṭir-ha* I squared things with her. -vn *miraḍiyya*; ava *miraaḍi*.

اتراضى *ʃitraaḍa* /vi/ to reach a settlement, consent mutually. *ʃitraadu maɛa baɛḍ* they reached a settlement with one another. *bit-taraaḍi* by mutual consent. -vn *taraaḍi*; ava *mitraaḍi*.

أرضى *ʃarḍaʔ* = *raḍa*. - vn *ʃirḍaaʔ*.

ارتضى *ʃirtaḍa* /vi/ to be satisfied, be content. -ava *murtaḍi, mirtiḍi*.

استرضى *ʃistarḍa* /vt/ to seek to appease, mollify. -ava *mistarḍi*.

ر ط ب

رطب *riṭib* /adj/ **1** damp, moist. **2** cool.

رطب *ruṭab* /coll n/ soft black date(s).

رطوبة *ruṭuuba* /n/ **1** dampness, moisture, humidity. **2** chill in the bones, rheumatic pain. *ḥasseet bi-ʃwayyit ruṭuuba f-gittit-i* I felt somewhat rheumaticky. **3** coolness.

رطّب *raṭṭab* /vt/ **1** to cool. *xud duʃʃ[i] w-raṭṭab gism-ak* take a shower and cool off. **2** to refresh, soothe. *kalaam-u l-ḥilw[i] yraṭṭab il-ɋalb* his pleasant conversation soothes one's feelings. — /vi/ **3** to become cool. *ʃig-gaww[i] raṭṭab* the weather turned cool. **4** to turn soft and sticky (of dates). -vn *tarṭiib*; ava *miraṭṭab*.

ترطيب *tarṭiib* /n/ *[text]* moisturizing process to which cotton is subjected before spinning.

ر ط ر ط

رطرط *raṭraṭ* **1** /vi/ to become overabundant, become too plentiful. **2** /vt/ to soil, dirty. -vn *raṭraṭa*; ava/pva *miraṭraṭ*.

رطريط *ruṭreeṭ* /n/ filthy mud, mire. ‖*xallaa ruṭreeṭ* he made a mess of it.

ر ط ل

رطل *raṭl* /n pl *ʃarṭaal/* unit of weight equal to 449.28 grams (0.9905 lb). ‖*zayy ir-raṭl* dim-witted and gullible.

ر ط ن

رطن *raṭan (u)* /vi/ to speak in an incomprehensible language, talk double-Dutch. *bi-yurṭunu bil-ʃafrangi* they're gabbling in some foreign language. -vn *raṭn*; ava *raaṭin*.

رطانة *ruṭaana* /n/ incomprehensible language, double-Dutch (applied especially to Nubian).

ر ع

رع *raɛ* /prop n/ the sun god of the ancient Egyptians.

ر ع ب

رعب *raɛab, raɛab (i)* /vt/ to terrify. -vn *ruɛb*; ava *raaɛib*; pva *marɛuub, marɛuub*.

رعب *ruɛb* /n/ terror, fear.

مرعب *murɛib* /adj */ terrifying.

اترعب *ʃitraɛab* /vi/ to be terrified. -iva *mitriɛib*.

ر ع ب ب

رعبب *raɛbib* /vt/ to frighten, terrify. -ava/pva *miraɛbib*.

ر ع د

رعد *raɛad (i)* /vi/ to thunder. -vn *raɛd*.

رعد *raɛd* /n pl *ruɛuud/* thunder.

رعدى *raɛdi* /adj/ pertaining to thunder. *saḥaab raɛdi* thunder clouds.

رعّاد *raɛɛaad* /coll n/ torpedo-fish, electric eel(s).

ر ع ر ع [1]

رعرع *raɛraɛ[1]* /vi/ to flourish, thrive. *ʃiz-zarɛ[i] raɛraɛ* the crops flourished. *ʃil-ɛiyaal miraɛraɛiin fil-madrasa* the children are thriving at school. -vn *raɛraɛa*; ava *miraɛraɛ*.

اترعرع *ʃitraɛraɛ* = *raɛraɛ*. - ava *mitraɛraɛ*.

ر ع ر ع [2]

رعرع *raɛraɛ[2]: raɛraɛ ʃayyuub* /coll n/ variety of fleabane (Pulicaria arabica).

ر ع ش

رعش *raɛaʃ (i)* /vt/ **1** to cause to tremble or shiver. **2** to frighten. -vn *raɛʃ, raɛaʃaan*; ava *raaɛiʃ*; pva *marɛuuf*.

رعشة *raɛʃa* /inst n, pl *-aat/* a trembling, a shivering. *raɛʃa fiṣ-ṣoot* a tremor in the voice.

مرعوش *marɛuuf* /adj */ timid, weak-kneed.

رعسان *raʕʃaan* /adj */ trembling, shaking.
رعّاس *raʕʕaaʃ* **1** /n/ any of a variety of fish which give electric shocks. **2** /adj/: *ʔif-falal ir-raʕʕaaʃ* Parkinson's disease.
رعّاسه *raʕʕaaʃa* /n/ malaria.
ارتعش *ʔitraʕaʃ* /vi/ **1** to shiver, tremble. *yikkalfit bil-ɣaṭa ʕaʃaan gism-u b-yitriʕiʃ* he wraps himself up in the bed-cover because he's shivering. **2** to be frightened. - ava/iva *mitriʕiʃ*.
ارتعش *ʔirtaʕaʃ* = *ʔitraʕaʃ*. - vn *ʔirtiʕaaʃ*↑; ava *mirtiʕiʃ*.

ر ع ع
رعاع *riʕaaʕ* /coll n/ rabble.

ر ع ن
رعن *raʕan* /n/ rashness.
أرعن *ʔarʕan* /adj, fem *raʕna*, pl *ruʕn*/ hubristic, pushy and headstrong.
رعونة *ruʕuuna* /n/ rashness.

ر ع ى
رعى *raʕa (a)* /vt/ **1** to care for the welfare of, look after, safeguard. *ʔil-waaḥid laazim yirʕa ʔawlaad-u* one has to look after the welfare of one's children. *ʔis-sifaara b-tirʕa maṣaaliḥ il-balad* the embassy looks after the country's interests. *ma-b-yirʕaa-ʃ in-niʕma lli huwwa fiiha* he's careless of his good fortune. **2** to pasture (animals). – /vi/ **3** to graze. - vn *riʕaaya, raʕy, marʕa*; ava *raaʕi*; pva *marʕi*.
رعاية *riʕaaya* /n/ care. *rıʕaaya ṭibbiyya* medical care. *markaz riʕaayit iʃ-ʃabaab* youth welfare centre. ‖*fi-rʕaayit illaah* (go) in God's care! (to one setting out on a journey).
راعى *raaʕi*↑ /n pl *ruʕaah*/ **1** shepherd. *ʔir-raaʕi ṣ-ṣaaliḥ [Chr]* the Good Shepherd (epithet of Jesus Christ). - *kiis ir-raaʕi [bot]* shepherd's purse. **2** *[Chr]* pastor.
رعيّه *raʕiyya* /n pl *raʕaaya*/ **1a** flock, herd. **1b** *[Chr]* congregation, parish. **2** subject (of, e.g., a state). – /coll n/ **3** subject(s).
مرعى *marʕa* /n pl *maraaʕi*/ grazing place, pasture.
راعى *raaʕa* /vt/ **1** to care for, look after (usually indirectly or at one remove). *laazim tiraaʕi l-ʕarabiyya ʕaʃaan tiʕammar* you must see that the car is well looked after so that it lasts. *da masʔuul ʔinnu yraaʕi naḍaafit il-maḥaṭṭa* he's responsible for seeing that the station is kept clean. *ma-b-yiʕrafuu-ʃ yiraaʕu maṣaliḥ-hum* they are incapable of ensuring that their interests are safeguarded. ‖*tiraʕii-ni ʕraaṭ ʔaraʕii-k ʕiraṭeen [prov]* any service you do me I will repay twice over. **2** to show consideration towards, take heed of. *ʔil-waaḥid laazim yiraaʕi g-giraan* one has to think of the neighbours. *di kaanit miraʕyaa-ni f-balad-ha ʕawi* she was very considerate to me in her country. *ʔiʃaraat il-muruur ma-ḥadd'-ʃ miḥtirim-ha wala mraʕii-ha* no one respects or takes any notice of the traffic-lights. *law kunti b-taxdi baal-ik mil-ʔuṣuul kunt' traaʕi ʔinn il-ʕayyil ma-ydayiʕ-ʃ ir-rukkaab* if you'd any manners, you'd see to it that the kid didn't annoy the passengers! ‖*raaʕa rabb-i-na* to fear God, behave rightly. - vn *muraʕaah*; ava *miraaʕi*.
مراعيّة *miraʕıyya* /n/ mindfulness. *maʕa mraʕiyyit-na lil-muʃkila ḥa-nnaaʕiʃ il-marḥala t-tanya* keeping the problem in mind we shall discuss the next stage.

ر غ ب
رغب *raɣab*↑ *(a)* /vt/ to desire. *ʔil-mamnuuʕ marɣuub [prov]* what is forbidden is desired. - vn *raɣba*; ava *raaɣib, raaɣib*; pva *marɣuub*.
رغبة *raɣba*↑ /n pl *raɣabaat*/ wish, desire. *ma-luu-ʃ raɣba f-ḥaaga* he has no desire for anything. *ʔiza kaan lak raɣba* if you wish. *ʔistimaarit raɣabaat [acad]* (college) preference form.

ر غ د
رغد *raɣad* /n/ comfort, ease. *raɣad il-ʕeeʃ* comfort of life.

ر غ ر غ
رغرغ *raɣraɣ* /vi/ to be wet with tears, water (of the eyes). *baṣṣeet laʕeet ʕenee mıraɣraɣa bid-dumuuʕ* I suddenly realized that his eyes were full of tears. - vn *raɣraɣa*; ava *miraɣraɣ*.

ر غ ف
رغيف *riɣiif* /n pl *ʔarɣifa, riɣífa*/ loaf (of bread). ‖*ʔir-riɣiif ıl-miʕammar liṣ-ṣaaḥib illi ydawwar [prov]* (the hot loaf goes to the one who looks) ≈ if you don't look, you don't find.

ر غ م
رغم *raɣam (i)* /vt/ to force, compel, coerce (s.o. into acceptance of s.th.). *bi-yirɣim-ni ʕas-safar leeh* why does he force me to go away? - vn *raɣm, raɣamaan*; ava *raaɣim*; pva *marɣuum*.
رغم *raɣm* /prep/ in spite of. ‖*raɣm' ʔanf-u* in spite of him, without reference to him, no matter what he thinks. - *ʕala* (or *bi-)r-raɣm' min* despite.
¶ *raɣm' ʔinn* /conj/ although, despite the fact that. *b-aḥibb is-sagaayir raɣm inn' hiyya ʔaɣla min if-fiifa*

I like cigarettes although they are more expensive than the water-pipe.
أرغم ʕarɣam = *raɣam*.

رغو see رغى: *raɣwa, raɣwa, raɣawi*

رغى
رغى *raɣa (i)* /vi/ to chatter, chat. *qaɛad yirɣi maɛaaya l-ɣaayit ma ɛaṭṭal-ni* he sat chatting with me until he made me late. - vn *raɣy, raɣayaan*; ava *raaɣi*.
رغوة *raɣwa, raɣwa* /n pl *raɣaawi, raɣaawi*/ foam, froth, lather.
رغوى *raɣawi*[1] /adj/ lathery, foamy, frothy.
رغّاى، رغاء *raɣɣaay* /n */ one given to chatter, chatterbox.
رغّى *raɣɣa* **1** /vt/ to lather, make foamy or frothy. *raɣɣi l-liifa* lather the loofah! **2** /vi/ to produce lather, foam or froth. *xalli l-laban yiraɣɣi ɛafaan yiɛmil wiff* let the milk get frothy so that it forms a (creamy) skin. - vn *tarɣiyya*; ava/pva *miraɣɣi*.
اترغّى ʔitraɣɣa /vi/ to be lathered, be made frothy or foamy. - iva *mitraɣɣi*.

رفء see رفى[1]

رفءيل
رفائيل *rufaʔiil, rafaʔiil* /prop n/ *[Chr]* the Angel Raphael.

رفت see رفد: *rafat, rafta, ʔitrafat*

رفح
ترفيحة *tarfiiḥa* /n pl *tarafiiḥ*/ *[non-Cairene]* **1** narrow woollen scarf worn by men (see Pl.F, 2). **2** square of fine white cloth worn as a scarf by men. - also *talfiiḥa, talfiiɛa*.

رفد
رفد *rafad* (also *rafat) (i)* to dismiss, sack. *wi-ɛanha w-raaḥ rafid-ni* he fired me on the spot. *law il-ʔustaaz simɛ-ak kaan laazim yirfid-ak min ik-kulliyya* if the professor had heard you, he would certainly have expelled you from the college. ‖ *daftar il-ʔamd*[i] *wir-rafd [mil]* register of incoming and departing soldiers. - vn *rafd, raft, rafadaan*; ava *raafid, raafit*; pva *marfuud, marfuut*.
رفدة *rafda* (also *rafta*) /inst n, pl *-aat*/ a dismissal. *rafda nhaʔiyya* final dismissal.
رفديّة *rafdiyya* dismissal.
اترفد ʔitrafad (also *ʔitrafat*) /vi/ to be dismissed, be sacked. - iva *mitrifid*.

رفرف[1]
رفرف *rafraf*[1] /vi/ to make a fluttering or flapping motion. *ʔil-ɛaṣfuura rafrafit bi-ginaḥat-ha* the bird fluttered its wings. *da ɋalb-i bi-yrafraf minni* I can't control the palpitation of my heart. - vn *rafrafa*; ava *mirafraf*.
اترفرف ʔitrafraf = *rafraf*. - ava *mitrafraf*.

رفرف[2]
رفرف *rafraf*[2] /n pl *rafaarif, rafaarif*/ **1** mudguard, fender. **2** cornice, eaves. **3** running-board.
رفراف *rufraaf* /n pl *rafariif*/ bandage or shield for the eye. ‖ *ɛala ɛenee rufraaf* ≈ he is wearing blinkers, he has faulty judgement.
رفروف *rafruuf* /n pl *rafariif*/ bandage or shield for the eye.

رفس see رفص

رفص
رفص *rafaṣ (u)* **1** /vt/ to kick, kick out at. ‖ *bi-yurfuṣ in-niɛma* ≈ he spurns God's blessings. **2** /vi/ to kick out. - vn *rafṣ, rafaṣaan*; ava *raafiṣ*; pva *marfuuṣ*.
رفّاص *raffaaṣ* /n pl *-aat*/ **1** (ship's) propeller. ‖ *gooza b-raffaaṣ* water-pipe of the *gooza* type having a hole covered with a leather flap pierced through the wall of the water chamber above the level of the water to allow the expulsion of stale smoke between the smoking of one portion of tobacco and the next. **2** motor-powered boat. — /adj */ **3** given to kicking.
اترفص ʔitrafaṣ /vi/ to be kicked. - iva *mitrifiṣ*.
رفّص *raffaṣ* /vt/ **1** to propel, drive. **2** to kick repeatedly. — /vi/ **3** to keep kicking out. *ʔil-waad bi-yraffaṣ wi-yɛayyaṭ* the kid is kicking and screaming. - vn *tarfiiṣ*; ava *miraffaṣ*.
اترفّص ʔitraffaṣ /vi/ to be kicked repeatedly. - iva *mitraffaṣ*.

رفض
رفض *rafaḍ (u)* /vt/ **1** to refuse, reject, turn down. *ʔil-bank*[i] *rafaḍ iʃ-ʃiik* the bank refused the cheque. *rafaḍu ṭ-ṭalab* they turned down the request. **2** /preverb/ to refuse (to do s.th.). *rafaḍu ygawwizu bint-u-hum li-bn-i* they refused to marry their daughter to my son. - vn *rafḍ*; ava *raafiḍ*; pva *marfuuḍ*.
رفضى *rafaḍi* /n */ renegade, bigot, heretic. ‖ *ʔibn*[i] (or *bint*[i]) *rafaḍi [abus]* ≈ dishonest bastard (or bitch).

اترفض ʔitrafaḍ /vi/ to be refused, be rejected, be turned down. - iva *mitrifiḍ*.

ر ف ط ا و

رفطاو *rifṭaaw* <Copt> /n/ measure of grain equal to one quarter of a *keela* (q.v.)

[1] ر ف ع

رفع *rafaʕ (a)* /vt/ **1** to raise, lift up. *ʔirfaʕ raas-ak* raise your head! *raaḥ raafiʕ ʔiid-u b-ʕaẓama* he suddenly raised his hand with a grand gesture. *rafaʕ koora ʕalya* he kicked a high shot. ‖*rafaʕ ʕeen-u fii* he talked back at him, he defied him. - *rafʕ il-ʔasqaal* weight-lifting. - *rafʕ' buxuur [Chr]* raising of incense. - *ʕiid rafʕ iṣ-ṣaliib [Chr]* the feast of the exaltation of the cross. **2** to increase, raise the level of. *ʕayziin nirfaʕ mustawa l-maʕiiʃa* we want to raise the living standard. **3** to remove, rescind, lift. *ʔil-mudiir bi-ysaddaq ʕala g-giza ʔaw yirfaʕ-u* the director either approves the penalty or lifts it. *ya rabb' ʔirfaʕ ɣaḍab-ak ʕanna* O Lord, lift Your anger from us! *xadt' ḥuqan laakin rafaʕit id-damm' yomeen bass* I had injections but they stopped the bleeding for a couple of days only. ‖*rafaʕ ʔiid-u* he withdrew, he gave up. - *madfaʕ ir-rafʕ* Ramadan cannon fired before first light to warn people that they should finish eating before the fast. **4** to submit (s.th., to a higher authority). *rafaʕt iʃ-fakwa lil-ʔidaara* I turned over the complaint to the administration. ‖*rafaʕ daʕwa* (or *qaḍiyya*) *[leg]* to file a suit, as in *rafaʕt[a] ʕalee daʕwit ṭard* I sought an eviction order against him. **5a** to record to scale. *bi-yirfaʕu maʕaalim il-ʔarḍ' w-yurṣuduu-ha ʕala l-xariiṭa* they record the topographical features and chart them on the map. **5b** to take an impression (of finger-prints etc.). *rafaʕu baṣamaat-u min ʕaṭ-ṭarabeeza* they lifted his finger-prints from the table. — /vi/ **6a** to rise (of bread or dough). **6b** to sprout from the earth (of shoots). - vn *rafʕ, rafaʕaan*; ava *raafiʕ*; pva *marfuuʕ*.

رفعة *rafʕa[1]* /pl *-aat*/ instance noun of *rafʕ*.

رافع *raafiʕ[1]* /n/ Raiser of the fortune of men (epithet of God).

رافعة *rafʕa[2]* /n pl *-aat, rawaafiʕ*/ **1** lever. **2** elevator (of a plane).

رفعة *rifʕa*↑ /n/ **1** high rank, standing. *min ʔagl' rifʕit il-waṭan* for the sake of the good standing of the country. **2** *[obsol]* title of and form of reference to one holding the Grand Order of Muhammad Ali (formerly the highest award for men).

أرفع *ʔarfaʕ[1]* /el/ higher/highest.

رفاعي *rifaaʕi* **1** /adj */ Rifa'i, of or pertaining to the Sufi order founded by Ahmad Rifa'a el-Kabir (the order was celebrated formerly for the miraculous feats performed by its members, especially the discovering and charming of snakes from houses). **2** /n pl *-yya*/ **2a** member of the Rifa'i order. *qayyid ya rfaaʕi* paralyse it, Rifa'i (a formula used on seeing a snake). **2b** snake-charmer.

رفيع *rafiiʕ[1]* /adj/ lofty, elevated, refined. *zooq rafiiʕ* refined taste. ‖*ṣaaḥib il-maqaam ir-rafiiʕ [obsol]* title of one holding the Grand Order of Muhammad Ali (formerly the highest award for men).

رفّيع *raffiiʕ* /n pl *raffiiʕa*/ *[soccer]* one skilled at long high shots, good kicker.

اترفع *ʔitrafaʕ* /vi/ passive of *rafaʕ*. - iva *mitrifiʕ*.

رافع *raafiʕ[2]* /vi/ to plead (on one's own or someone else's behalf). - vn *murafʕa*; ava *miraafiʕ*.

مرافعة *murafʕa* /n/ *[leg]* defence.

اترافع *ʔitraafiʕ* /vi/ *[leg]* to plead, present a case. - ava *mitraafiʕ*.

ارتفع *ʔirtafaʕ* /vi/ **1** to become high, rise. *ʔil-ʔasʕaar irtafaʕit* prices went up. *daragit il-ḥaraara rtafaʕit* the temperature rose. *ʃababiik murtafiʕa* high windows. **2** to cease, let up. *ʔid-damm irtafaʕ ʔimbaariḥ* the bleeding stopped yesterday. - vn *ʔirtifaaʕ*; ava *mirtifiʕ, murtafiʕ*.

ارتفاع *ʔirtifaaʕ* /n pl *-aat*/ height, elevation, altitude.

مرتفع *murtafaʕ* /n pl *-aat*/ high place, height. *murtafaʕaat il-gulaan* the Golan Heights.

[2] ر ف ع

رفع *rifiʕ, rufuʕ (a)* /vi/ to become thin, become slender. - vn *rufʕ, rafaʕaan, rufuʕiyya*; ava *rafʕaan*.

رفع *rufʕ* /n/ thinness. *rufʕ' waraqit is-sigaara ma-yṣaḥḥ'-ʃ yiziid ʕan kida* the thinness of cigarette paper should not exceed that (i.e. it should not be thinner than that).

رفيع *rafiiʕ[2]* = *rufayyaʕ*.

رفايع *rafaayiʕ* /pl n/ small objects (e.g., small fitments, small and therefore inferior fruits and vegetables).

رفّيع *rufayyaʕ* /adj */ **1** thin, slim, slight, delicate. *xeeṭ rufayyaʕ* a fine thread. *baṣal rufayyaʕ* small onions, baby onions. *buuṣa rfayyaʕa* a slender reed. **2** fine, not coarse. *mabfara rufayyaʕa* a fine grater. - also *rufantaʕ, rufannaʕ*.

أرفع *ʔarfaʕ[2]* /el/ thinner/thinnest, slimmer/slimmest, etc.

رفّع *raffaʕ* /vt/ **1** to make thin, make fine. **2** to thin, thin down (a liquid). - vn *tarfiiʕ, tarfiiʕ*; ava/pva *miraffaʕ*.

اترفّع ʕitraffaʕ /vi/ **1** to be made thin, be made fine. **2** to be thinned. - iva *mitraffaʕ*.
ارفّع ʕirfaʕʕ /vi/ to become thin. - ava *mirfaʕʕ*.
استرفع ʕistarfaʕ /vt/ **1** to select for thinness. **2** to consider (too) thin. - vn *ʕistirfaaʕ*; ava *mistarfaʕ*.

ر ف ف [1]
رفّ *raff*[1] *(i)* /vi/ **1** to twitch, flutter. ‖*ʕeen-i bi-triff* I have a premonition. **2** to wobble, move eccentrically (of a wheel or the like). **3** to come or take place unpredictably and/or in abundance. *ʕit-tilliɤrafaat tinzil tiriff*[i] *min ig-gumhuur* the cables keep flowing in from the public. *ʕil-kutʃiina bi-tqarqaʕ wil-baṣaari bi-triff* the cards snap and the trumps come slapping down. - vn *raff, rafafaan*; ava *raafif*.
رفّة *raffa*[1] /inst n, pl *-aat*/ **1** a twitch. **2** a wobble.

ر ف ف [2]
رفّ *raff*[2] *(i)* /vt/ to mend (clothes or carpets) invisibly, darn, patch. - also *rafa*. - vn *raff*; ava *raafif*; pva *marfuuf*.
رفّة *raffa*[2] /inst n, pl *-aat*/ an invisible repair, a darn, a patch. - also *rafya*.
رفّا *raffa*[3] /n/ **1** profession of darning or patching clothes or carpets. **2** darner's establishment or workshop. **3** darner or patcher of clothes or carpets.
اترفّ ʕitraff /vi/ to be invisibly mended, be darned or patched. - iva *mitraff*.

ر ف ف [3]
رفّ *raff* /n pl *ʕarfuf, rufuuf*/ shelf. ‖*ʕala r-raff* left out of consideration, out of the running.
رفّ *riff* <Engl> /n/ *[soccer]* ref, referee. *ʃiilu r-riff* take off the ref!

ر ف ق
رفق *rafaq*[1] *(a)* /vi/ to behave kindly (towards s.o.). - vn *rifq*; ava *raafiq*.
رفق *rafaq*[2] *(i)* /vt/ to enclose and send (a paper, document etc.). *ʕirfiq il-muzakkira bil-istimaara* enclose the memo with the form. - vn *rafq*; ava *raafiq*; pva *marfuuq*.
رفق *rifq, rifq*↑ /n/ kindness, gentleness. *ʕil-rifq*[i] *bil-ḥayawaan* kindness to animals.
رفقة *rifqa* /n/ companionship, company.
رفق *rafaq*[3] /n/ **1** love affair. *rafaq-i maʕaaha kaan zift* my affair with her was awful. **2** *ʕir-rafaq* one's lover. *ʕir-rafaq bitaaʕ-u* his lover. *ʕir-rafaq bitaʕ-ha* her lover.
أرفق *ʕarfaq* /el/ more/most kind.
رفيق *rifiiq* /n pl *rufaqa, rafaayiq*/ **1** male lover. **2** friend.
رفيق *rafiiq, rafiiq*↑ /n pl *rifaaq, rifaaq, rufaqa*/ **1** colleague, companion. ‖*ʕir-rafiiq il-ʕaʕla* God. **2** form of address and reference used among communists, Comrade. **3** male lover, boyfriend.
رفيقة *rifiiqa* /n pl *-aat*/ **1** female companion. **2** female lover, girlfriend.
مرفق *marfaq* /n pl *maraafiq*/ convenience, facility, anything conducive to ease or comfort. *maraafiq (ʕamma)* public utilities. *marfaq il-muwaṣlaat* the transportation system. *marfaq is-sikka l-ḥadiid* the railway service.
اترفق ʕitrafaq /vi/ to be enclosed (of papers, documents etc.). *laazim iṭ-ṭalab yitrifiq maʕa l-istimaara* the application must be enclosed with the form. - iva *mitrifiq*.
اترفّق ʕitraffaq /vi/ to behave kindly or gently. - ava *mitraffaq*.
رافق *raafiq* /vt/ **1a** to be the lover of. *rafiqt-a-ha l-muddit talat siniin* I was her lover for three years. **1b** to be the companion of. **2**↑ to be attached to, accompany. *ʕid-duktuur il-muraafiq lil-fariiq* the doctor accompanying the team. *siriir muraafiq* companion-bed (e.g., in hospital patient's room, for a relative). - vn *murafqa*↑; ava *miraafiq, muraafiq*↑.
ترافق ʕitraafiq /vi/ to accompany one another. - ava *mitraafiq*.
أرفق *ʕarfaq*↑ = *rafaq*[2]. - vn *ʕirfaaq*; ava *mirfiq, murfiq*; pva *murfaq*.
استرفق *ʕistarfaq* = *ʕitraffaq*.

ر ف ل
رفلة *rafla* /n pl *-aat*/ *[mus]* musical passage repeated at the end of each verse of a song, theme of a song.

ر ف ل ف ر
ريفولفر *rifulfar* <Engl> /n pl *-aat*/ revolver. - also *firfir*.

ر ف ن ت ع
رفنتع *rufantaʕ* /adj */ small, thin. - also *rufayyaʕ, rufannaʕ*.

ر ف ن ن ع
رفنع *rufannaʕ* /adj */ thin, fine. *ʕazmiir rufannaʕ* a fine chisel. *ɤuraz rufannaʕa* fine stitches. - also *rufantaʕ, rufayyaʕ*.

ر ف ه
رفاهيّة *rafahiyya*↑ /n/ luxury, comfort.
رفّه *raffah* **1** /vt/ to give (s.o.) a life of luxury. *miraffah*

nafs-u he is taking good care of himself. **2** /vi/ to provide relaxation or recreation. *ʕasafir-li ʕiskindiriyya ʕaraffah ɛan nafs-i ʃwayya* I'm going to Alexandria to relax for a while. *raaḥu g-gabha yraffahu ɛan ig-gunuud* they went to the front to entertain the troops. - vn *tarfiih*; ava/pva *miraffah*.

ترفيهى *tarfiihi*↑ /adj/ pertaining to relaxation, recreational. *ɛilaag tarfiihi* recreational therapy.

اترفّه *ʕitraffah* /vi/ to live a life of ease, pleasure and comfort. - ava *mitraffah*.

ر ف ى [1]

رفا *rafa (i)* to darn, patch. ‖*makanit rafy ig-gizam* shoe-stitching machine. - also *raff*. - vn *rafy, rafw*; ava *raafi*; pva *marfi*.

رفية *rafya*[1] /inst n, pl *-aat*/ a darn, a patch. - also *raffa*.

ر ف ى [2]

رافية *rafya*[2] <Engl> /n/ raffia.

ر ق ب

رقبة *raqaba* /n: w suff also *riqabit-*; pl *riqaab, ʕirqaab, raqabaat*/ **1** neck. *raqabit il-ɛuud* the neck of an *ɛuud* (see Pl.J, 11). ‖*raqabt-i* I'm yours to command! - *fi-raqabit* on the responsibility of, as in *da kull-u f-raqabt-i* all that's my responsibility, *ʕana raagil ɤalbaan wi-f-raqabt-i koom laḥm* I'm a poor man with many dependents. - *bi-raqabit* far superior to, as in *ḥabl ik-kittaan bi-raqabit ḥabl in-naylun* linen rope is much better than nylon rope. - *ḥaqq-i b-raqabt-i* ≈ I give in, I'll do whatever you want (said under duress). - *ʕiḥna nirmi raqabit-na w-nimʃi waraaha* we commit ourselves to something and carry it through. - *wi-raqabt-u taḥt riglee* (he acted) grudgingly, (he acted) under duress. - *ʕilli ybuṩṩ' l-fooq tiwgaɛ-u raqabt-u [prov]* (he who looks up gets a pain in the neck) he who tries to keep up with the Joneses gets out of breath. - *zamb-ak fi-raqabt-i* I take your guilt on myself. - *ʈawwil ir-raqaba* to make proud. - *xalla raqabt(-u) zayy is-simsima* to cause (s.o.) to feel small, humiliate. **2** neckpiece (of a garment etc.). *raqaba bilastik* cervical collar. *gazma b-raqaba* boots.

رقبيّة *raqabiyya* /n pl *-aat*/ collar (part of harness of draught animal).

رقبان *raqabaan: ʕabu raqabaan* having no feathers on its neck (of a chicken).

رقبانة *raqabaana* = *raqabaan*.

رقابة *riqaaba, riqaabaʰ* /n pl *-aat*/ **1** censorship, surveillance. **2** *ʕir-riqaaba* censor's department.

رقوبة، راقوبة *raquuba* /n/ egg(s) left in the coop as an inducement to chickens to lay.

رقيب *raqiib* /n pl *ruqaba*/ **1** censor. **2** *[mil]* sergeant. — /no pl/ **3** Just Observer (epithet of God). **4** *[Isl]* angel reputed to accompany one through life, stationed on one's right-hand side, to record one's good deeds (cf *ɛatiid*).

اترقّب *ʕitraqqib* /vt/ to anticipate, expect, be on the look-out for. - ava *mitraqqib*.

راقب *raaqib* /vt/ **1a** to keep under observation. *ma-fii-ʃ ḥadd' mraqb-ak ɤeer rabb-i-na w-ḍamiir-ak* there's no one watching over you but God and your conscience. **1b** to supervise. *b-addii-hum looḥ tafṩiili w-b-araaqib it-tanfiiz* I give them a diagram and supervise its execution. **2a** to check over, check through. *raaqib ḍaftar il-baṩamaat* he checked through the finger-print file. **2b** to censor. - vn *miraqba*; ava *miraaqib, muraaqibʰ*; pva *muraaqab*.

مراقبة *muraqba* /n/ supervision, surveillance, control. *taḥt il-muraqba* under surveillance.

مراقب *muraaqib* /n */ **1** supervisor, overseer. **2** *[acad]* **2a** invigilator, proctor. **2b** highest non-academic administrative officer of a faculty or college. **3** *[bank]* comptroller. **4** *[mil]* warrant-officer.

اتراقب *ʕitraaqib* /vi/ **1a** to be kept under observation. **1b** to be supervised. **2a** to be checked. **2b** to be censored. - iva *mitraaqib*.

ر ق د

رقد *raqad (u)* /vi/ **1** to lie. *ʕil-ḥigaara raqda ɛala ɋalb ir-raṩiif* the stones are lying slap in the middle of the pavement. **2** to lie abed. *raqadt' fiiha ḥawaali ʕusbuuɛ* I was laid up with it for about a week. ‖*raqad ɛala l-beeḍ* to brood on its eggs (of a bird). - *raqad ɛala fluus* to stash away one's money, hoard one's money, as in *ʕana raaqid ɛala qirfeen lil-ʕayyaam is-sooda* I've got some money stashed away for bad times. - vn *ruqud, ruqaad, raqadaan*; ava *raaqid*.

رقدة *raqda* /n pl *-aat*/ a sleep, a nap.

مرقد *marqad* /n pl *maraaqid*/ resting place. ‖*marqad il-kilwa [butcher]* loin. - *marqad il-laban [rur]* storage place for milk.

رقّد *raqqad* /vt/ **1** to cause to lie down, prostrate. **2** *[agric]* to layer (shoots). - vn *tarqiid*; ava *miraqqad*.

ترقيدة *tarqiida* /inst n, pl *-aat, taraqiid/ [agric]* layer.

اترقّد *ʕitraqqad* /vi/ to be prostrated, be made to lie down. - iva *mitraqqad*.

ر ق ر ق

رقرق *raqraq* /vi/ **1** to weaken, soften up. **2** to well up

(of tears). *ʕid-dumuuɛ miraqraqa f-ɛenee* tears are glistening in his eyes. - vn *raqraqa*; ava *miraqraq*.

ر ق ص

رقص *raqaṣ (u)* **1** /vt/ to perform (a dance). *raqaṣit raqṣa gdiida* she danced a new dance. **2** /vi/ to dance. ‖ *ʕurquṣ lil-ɢird' f-dawlit-u [prov]* (dance for the ape where he reigns) ≈ curry favour with authority no matter how misbegotten. - *zayy illi raqaṣit ɛas-sillim - la ʃafuu-ha ʕahl' taḥt' wala ʕahl' fooq [prov]* like the woman who danced on the stairs - neither the people upstairs saw her, nor those downstairs (of one who is doing s.th. at the wrong time and place). - vn *raqṣ*; ava *raaqiṣ*.

رقص *raqṣ* /n/ dance, dancing. *ʕir-raqṣ if-farqi* belly-dancing. - *ʕir-raqṣ' naqṣ [prov]* to dance is to lose dignity. - *ʕawwil ir-raqṣ' tiḥangiil [prov]* (when one first dances, one hops) ≈ everything is difficult at the beginning, practice makes perfect.

رقصة *raqṣa* /inst n, pl *-aat*/ a dance.

رقّاص *raqqaaṣ* **1** /n */ male dancer. **2a** /n pl *-aat*/ balance mechanism (of a watch). **2b** pendulum (of a clock).

رقّاصة *raqqaaṣa* /n pl *-aat*/ female dancer. *timuut ir-raqqaaṣa w-wiʃt-a-ha b-yilɛab [prov]* (the dancer dies while her waist (still) undulates) ≈ old habits are unbreakable.

اترقص *ʕitraqaṣ* /vi/ to be danced. *ʕir-raqṣ il-baladi mumkin yitriqiṣ fi-ʕayy' ḥitta* the stick dance may be performed anywhere. - iva *mitriqiṣ*.

رقّص *raqqaṣ* /vt/ **1** to cause to dance. *raqqaṣuu-ha ɛala waḥda w-nuṣṣ* they struck up the *waḥda w-nuṣṣ* rhythm for her to dance to. *raqqaṣit ḥawagib-ha* she moved her eyebrows rapidly up and down. **2** *[soccer]* to run rings round (an opposing player). - vn *tarqiiṣ*; ava/pva *miraqqaṣ*.

اترقّص *ʕitraqqaṣ* /vi/ **1** to move as if dancing, sway. **2** to be made to dance. - ava/iva *mitraqqaṣ*.

ر ق ع [1]

رقع *raqaɛ (a)* **1** /vt/ to slam, bang. *ma-tirqaɛ-ʃ il-baab* don't slam the door! *raqaɛt-u ɢalameen* I gave him a couple of hard slaps. *ya naas ma-fii-ʃ ṭuuba ʕarqaɛ-u biiha* hey somebody, isn't there a stone I can clout him with? ‖ *raqaɛit biṣ-ṣoot* she yelled out suddenly, she screamed out. - *raqaɛ mifwaar* to tackle a (tiresome) errand. **2** /vi/ to emit a banging sound, bang. *ʕiṭ-ṭabl' b-yirqaɛ* the drums are banging. - vn *raqɛa, raqaɛaan*; ava *raaqiɛ*; pva *marquuɛ*.

مرقوع *marquuɛ* /adj */ of easy virtue, of loose morals.

اترقع *ʕitraqaɛ* /vi/ to be slammed, be banged. - iva *mitriqiɛ*.

رقّع *raqqaɛ [1]* /vt/ to hit (very hard or a number of times). *raqqaɛ-lu sdaav-u* give him a couple of slaps on the face. - vn *tarqiiɛ*; ava/pva *miraqqaɛ*.

اترقّع *ʕitraqqaɛ [1]* /vi/ to be hit (very hard or a number of times). - iva *mitraqqaɛ*.

ر ق ع [2]

رقعة *ruqɛa* /n pl *ruqaɛ*/ **1** patch (for mending). **2** chessboard. **3** *[obsol]* baking sheet.

رقعة *riqɛa* or *ruqɛa* /n/ cursive calligraphic style (that most commonly used in Arabic handwriting).

رقّع *raqqaɛ [2]* /vt/ to patch. *raqqaɛt il-hiduum wig-gizam* I had my clothes and shoes patched. - vn *tarqiiɛ*; ava/pva *miraqqaɛ*.

مرقّع *miraqqaɛ* /adj */ *[deris]* experienced in the ways of the world, worldly-wise.

اترقّع *ʕitraqqaɛ [2]* /vi/ to be patched. - iva *mitraqqaɛ*.

ر ق ق

رقّ *raqq (i)* /vi/ **1** to behave graciously or kindly, show favour. *riqq" ɛaleena b-naẓara* grace us with a glance! (to a pretty girl). *riqq' ɛaleena ya gamiila* favour us, beautiful one! (to a pretty girl). **2** to become thin, delicate or fine. — /vt/ **3** to make thin, delicate or fine. - vn *raqq, riqqa, raqaqaan*; ava *raaqiq*; pva *marquuq*.

رقّة *riqqa* /n/ **1** delicacy, fineness (e.g., of work). **2** sensitivity, gentleness.

رقّ *riqq* /n pl *ruquuq*/ **1** kind of tambourine, with jingles, smaller than the *duff* or the *mazhar*. **2** valve flap. **3** parchment. **4** slavery.

رقّيّة *riqqiyya = riqqa*.

رقاق *ruqaaq* /coll n/ paper-thin round sheets of dough, usually dried, used in the preparation of various dishes.

رقاقة *ruqaaqa* /unit n, pl *-aat*/ a sheet of *ruqaaq*.

رقيق *raqiiq* /adj pl *ruqaaq*/ **1** delicate, fine. *ɢifra ṣadaf raqiiqa* a fine covering of mother-of-pearl. *gazma raqiiqa* a fine pair of shoes. **2** sensitive, gentle. *ʕil-bint' di raqiiqa w-roḥ-ha ḥilwa* she's a gentle and pleasant-natured girl.

رقيق *raqiiq* /coll n/ slave(s). *tigaarit ir-raqiiq il-ʕabyaḍ* the white slave trade.

رقايق *raqaayiq* /pl n/ thin or fine sheets or layers of metal. *raqaayiq ʕalamunya* thin sheets of aluminium.

رقّيق *ruqayyaq* /adj */ thin, fine. *ḥittit ɛaṣaaya ruqayyaqa min il-xarazaan* a thin piece of bamboo stick.

أرقّ *ʕaraqq* /el/ thinner/thinnest, finer/finest.

رقّاق *raqqaaq* /n */ player of the *riqq*.

اترق ʔitraqq /vi/ to become or be made thin or fine. -ava/iva *mitraqq*.

رقّق *raqqaq* /vt/ to make fine or thin. *wi-nta bi-tbaṭṭaṭ il-ɛagiina raqqaq-ha* while flattening the dough, thin it (too). -vn *tarqiiq*; ava/pva *miraqqaq*.

اترقّق ʔitraqqaq /vi/ to be made thin or fine. -iva *mitraqqaq*.

ر ق م [1]

رقم *raqam[1] (u)* /vt/ **1** to notice, spot. *raqamt-u w-huwwa ṭaaliɛ mil-beet* I spotted him as he left the house. **2** to keep under surveillance, keep an eye on. *raqim-ku ʔana* I've got my eye on you! -vn *raqamaan, raqm*; ava *raaqim*; pva *marquum*.

رقم *raqam, raqm, raqm* /n pl *ʔarqaam*/ number, numeral, figure. *ʔil-qanuun raqam talattaʃar* law number thirteen. *ʔil-ʔarqaam bi-tquul kida* the figures say so.

أرقم *ʔarqam* /adj, fem *raqma*, pl *ruqm*/ sharp-witted.

اترقم ʔitraqam /vi/ **1** to be noticed. **2** to be kept under surveillance. -iva *mitriqim*.

رقّم *raqqam* /vt/ to number, give a number to. *tarraxt il-muzakkira w-raqqamt-a-ha* I dated and numbered the memo. ‖*ɛalamaat it-tarqiim* punctuation marks. -vn *tarqiim*; ava/pva *muraqqam*.

مرقّم *miraqqam* /adj */ sharp-witted, crafty.

اترقّم ʔitraqqam /vi/ to be numbered, be given a number. -iva *mitraqqam*.

ر ق م [2]

رقمة *raqma* /unit n, pl *-aat*/ **1** tympanum (usually of fish skin, of, e.g., a drum, a rebab, see Pl.J, 3). **2a** leather strip under the strings of a zither (*qanuun*) that serves to absorb vibrations. **2b** ornamental guard-plate on the face of a *ɛuud*, below the rosette, for protection against the plectrum (see Pl.J, 13).

رقم *raqam[2]* collective noun of *raqma*.

ر ق و see ر ق ى [1]: *raqw, raqwa*

ر ق ى [1]

رقى *raqa[1] (i)* /vt/ to ward off the evil eye from (s.o.) by means of incantations and censing, perform a *raqw* for (s.o.). *ʔin-nabi raqa naqṭ-u min gamaɛṭ-u* the Prophet censed his she-camel against the evil eye of his companions (an incantation from the *raqwa* ceremony). -vn *raqw*; ava *raaqi*; pva *marqi*.

رقوة *raqwa* /inst n, pl *-aat*/ ceremony of incantations and censing performed over something to protect it against the evil eye.

رقية *raqya = raqwa*.

اترقى ʔitraqa /vi/ to have a *raqwa* performed for one. -iva *mitriqi*.

استرقى ʔistarqa /vt/ to invoke protection (for s.o.) through the performance of a *raqwa*. *raʃeet-ak wi-starqeet-ak min ɛeen illi ma yṣalli ɛan-nabi* form of incantation over a sick person. -vn *ʔistirqa*; ava *mistarqi*.

ر ق ى [2]

رقى *riqi (a)* /vi/ to rise, advance, progress. *riqi f-wazift-u* he rose in his job. -vn *raqyaan*; ava *raaqi*.

رقى *raqa[2] (a): raqa bi-* to help to advance. *bi-nwaddii-hum il-madaaris ɛalaʃaan yirqu b-maṣr* we send them to school so that they may help Egypt to progess. -vn *ruqiyy*↑; ava *raaqi*.

راقى *raaqi* /adj */ refined, high-class. *zooq raaqi* refined taste. *ʔil-ʔazyaaʔ ir-raqya* high fashion garments, haute couture.

أرقى *ʔarqa* /el/ more/most refined, more/most high-class.

رقّى *raqqa* /vt/ **1** to promote. ‖*raqqa ɛaskari* to queen a pawn (in chess). **2** to refine, polish up (manners). -vn *tarqiyya, tarqiya*↑; ava/pva *miraqqi*.

ترقية *tarqiyya, tarqiya*↑ /n pl *-aat*/ promotion.

اترقّى ʔitraqqa /vi/ **1** to be promoted. **2** to be refined, be polished up (of manners). -iva *mitraqqi*.

ر ك ا م

ركامة *rukaama* <It *ricamo*> /n/ broderie anglaise.

ر ك ب

ركب *rikib (a)* /vt/ **1** to mount, board, ride. *kaanit rakba ḥuṣaan* she was riding a horse. *xallii-hum yirkabu turmaay* let them take a tram! ‖*ʔil-ʔarḍ' ma-yirkab-haa-ʃ in-niil fi-gamiiɛ il-bilaad* the Nile does not rise over the land throughout the country. -*rikib raas-u* he got to be stubborn. -*rikib dimaɣ-u ʔinn* ... he got it into his head that .... **2** to dominate, have the upper hand over, boss around. *yiṣaḥḥ' xaddaam yirkab ʔaxuu-k* is it proper for a servant to boss your brother around? *miraat-u rakbaa (wi-mdaldila riglee-ha)* his wife has him right under her thumb. ‖*rakb-u ɛafriit* (1) he is possessed by a demon. (2) he's in a bad humour, he's likely to blow up if provoked. — /vi/ **3** to mount, board, ride. *ḫ-awaṣṣal-ak li-ḥadd' ma tirkab* I'll go along with you till you find transport. ‖*bi-yirkab fooq dimaɣ-na* he bosses us around. **4** to be installed.

ʃik-kablaat rikbit ɤalaṭ the cables were laid incorrectly. *fii mikrufoon raakib* there is a microphone set up. ‖ *muxx-u* (or *ɛaql-u*) *raakib ʃimaal* ≈ he is pig-headed. - vn *rukuub, rukuuba*; ava *raakib*; pva *markuub*.

ركوبة *rukuuba* /n/ **1** /pl *rakaayib*/ riding animal. **2** /pl *-aat*/ a ride, a lift.

راكب *raakib* /n pl *rukkaab*/ passenger.

مركوب *markuub* /n pl *marakiib*/ type of shoe or slipper with a turned-up toe. ‖ *ya-bn il-markuub* ≈ you son of an old boot! - *ʃabu markuub* shoebill.

ركبة *rakba* /n pl *-aat*/ a ride.

ركبة *rukba* /n pl *rukab*/ **1** knee. ‖ *lir-rukab* in great quantity, as in *ʃakl[i] lir-rukab* masses of food. - *rukab-i saabit* ≈ my knees turned to jelly (from fear). - *manẓar yiḫill* (or *yisayyib*) *ir-rukab* a terrifying sight. **2** node (on the stem of a plant). **3** *[mech]* joint. **4** knee-pad, knee-guard.

ركاب *rikaab* /n pl *-aat*/ pair of stirrups.

ركّيب *rakkiib* /n pl *rakkiiba*/ skilled rider.

مركب *markib* /masc and fem n, pl *maraakib*/ boat, ship. ‖ *ʃil-markib illi fiiha rayyiseen tiɤraq [prov]* (a ship with two captains will sink) ≈ too many cooks spoil the broth.

مركبة *markiba* /n pl *-aat*/ small boat.

مراكبي *marakbi* /n pl *-yya*/ boatman. ‖ *ɛuzuumit marakbiyya* an invitation not seriously intended (because one cannot take up an invitation from a boatman passing in midstream).

اتركب *ʃitrakab* /vi/ to be mounted, be boarded, be ridden. - iva *mitrikib*.

ركّب *rakkib* /vt/ **1** to cause to mount, cause to board. *rakkibuu ɛala ḫṣaan* they mounted him on a horse. *rakkibt-a-ha ḫanṭuur* I put her in a carriage. *rakkibt-ak waraaya saraqṭ il-ɛeef [prov]* (I gave you a lift behind me (on my donkey) and you stole the bread) you took advantage of my kindness. **2** to put under the domination of. ‖ *ʃiwɛa titma ʃlis la-yrakkib-ak if-ʃeex miit ɛafriit* don't make fun or the Shaykh will send a hundred demons to possess you! **3** to mount, install, fix up. *ʃana mrakkib gilda lil-ḫanafiyya* I've put a washer on the tap. *rakkibt[i] tilifoon* I installed a telephone. *ʃig-gazmagi rakkib-li nuṣṣ[i] naɛl* the cobbler put on a half-sole for me. **4** to combine, compound, synthesize. *b-aaxud il-maqaaṭiɛ ig-gayyida w-ʃarakkib-ha ɛala baɛḍ* I take the outstanding verses and combine them. - vn *tarkiib*; ava/pva *mirakkib*.

تركيبة *tarkiiba* /inst n, pl *-aat, tarakiib*/ **1** installation, fitment. **2** compound, mixture.

مركّب *murakkab* /adj/ **1** composite, compound. — /n pl *-aat*/ **2** *[chem]* compound. *murakkabaat ɤizaʃiyya* nutriments. **3** component, ingredient. **4** *[psych]* complex. *murakkab naqṣ* inferiority complex.

اتركّب *ʃitrakkib* /vi/ passive of *rakkib*. - iva *mitrakkib*.

ارتكب *ʃirtakab* /vt/ to commit (e.g., a mistake, a crime). - vn *ʃirtikaab*; ava *mirtikib, murtakib*.

ر ك ت see ر ا ك ت : *raakit*

ر ك ت ت

ريكوتّا، ريكوتّه *rikutta* <It> /n/ ricotta (a soft unsalted type of white cheese).

ر ك د

ركد *rakad (i)* /vi/ to lie stagnant (of water). ‖ *ʃis-suuq raakid* the market is sluggish. - vn *rukuud, rakadaan*; ava *raakid*.

ر ك ر د ر

ريكوردر *rikurdar* <Engl> /n pl *-aat*/ tape-recorder.

ر ك ز

ركز *rikiz, rakaz[i] (i)* /vi/ to come to rest, achieve stability, settle on an even keel. *ʃil-moog hidi wil-markib rikzit* the waves subsided and the boat stopped tossing. *sibt is-sillim raakiz ɛal-ḫeeṭ* I left the ladder leaning against the wall. *ma-fii-ʃ xaddaam yirkiz ɛandi gumɛa* I can't get a servant to stay with me a week. - vn *rakaẓaan, rukuuz*; ava *raakiz*.

ركز *rakaz[2] (i)* /vt/ to set securely, position, rest. *rakaẓt[i] qurt-i ɛala draaɛ-i w-nimt* I rested my forehead on my arm and slept. *rakaz il-ɛatala taḥt il-ɛarabiyya w-rafaɛ-ha* he positioned the crowbar under the car and lifted it. - vn *rakaẓaan, rakz*; ava *raakiz*; pva *markuuz*.

أركز *ʃarkaz* /el/ more/most stable or steady.

ركاز *rikaaz* /n/ residue.

ركوز *rukuuz* /n/ *[mus]* keynote of a scale.

ركيزة *rakiiza* /n pl *rakaayiz*/ **1** brace, support. **2** *[mus]* short double length of pipe immediately following the mouthpiece of the *ʃarɤuul* and *muzmaar*. (see Pl.J, 22).

مركز *markaz* /n pl *maraakiz*/ **1** centre, central point. *markaz id-dayra* the centre of the circle. ‖ *markaz it-tuqul* centre of gravity. - *markaz baṣari* focal point. **2** headquarters, centre of activity. *ɛamalt il-qahwa markaz-i* I made the café my headquarters. *markaz buḥuus* research centre. *maraakiz tadriib* training centres. **3a** administrative area within a province, and under the government of a senior police officer (*maʃmuur*). **3b** town from which the area known as a *markaz* is administered. **3c** building housing the main administrative offices, central police station etc., of the

area known as a *markaz*. **4a** placing, position. *ʕil-laɛɛiiba luhum maraakiz zayy' laɛɛiibit ik-koora* the players' positions are the same as those of soccer players. **4b** standing, status. *ʕiḥfaẓ markaz-ak* remember your position (and behave accordingly). *raagil ma-luu-ʃ markaz* a nobody. see further under م ر ك ز

مركزى *markazi* /adj/ central, main. *ʕil-bank il-markazi* the Central Bank. *ʕil-maḥkama l-markaziyya* the central court.

اتركز *ʕitrakaz* /vi/ to be set securely, be positioned. - iva *mitrikiz*.

ركّز *rakkiz* **1** /vt/ to concentrate, bring together. *ɛabiir murakkaz* concentrated fragrance. **2** /vi/ to concentrate, think concentratedly. *b-azaakir lil-imtiḥaan wi-ɛaayiz ʕarakkiz* I'm studying for the exam and want to concentrate. - vn *tarkiiz*; ava *mirakkiz*; pva *murakkaz*.

اتركّز *ʕitrakkiz* /vi/ to be concentrated. - iva *mitrakkiz*.

ارتكز *ʕirtakaz* /vi/ to centre one's weight, balance. - vn *ʕirtikaaz*; ava *mirtikiz*.

ر ك ض

ركض *rakaḍ (u)* /vi/ to run, gallop. - vn *rakḍ, rukuuḍ*; ava *raakiḍ*.

ر ك ع

ركع *rakaɛ (a)* /vi/ **1** to kneel, get down on one's knees. **2** *[Isl]* to bow from the waist in the performance of the ritual prayers. - vn *rukuuɛ*; ava *raakiɛ*.

ركعه *rakɛa* /n pl *-aat*/ prescribed part of the Islamic ritual prayer. *farḍ il-ɛiʃa ʕarbaɛ rakɛaat* the prescribed number of *rakɛa*s for the last evening prayer is four.

اتركّع *ʕitrakkaɛ* /vi/ *[Isl]* to pray supererogatory ritual prayers (independently of a group of worshippers). - ava *mitrakkaɛ*.

ر ك ف و ر

ركفور *rukfoor, rikfuur* <Fr *Roquefort*> /n/ any blue cheese.

ر ك ك [1]

ركّ *rakk[1] (u)* /vi/ to become broody (of a hen). - vn *rakk, rakakaan*; ava *raakik*.

ركّ *rakk[2]* /n/ reliance. *ʕinta lli ɛaleek ir-rakk* you are the one (we) depend on. *rakk-ak ɛad-dawa taxd-u b-intiẓaam wi-nta tʃiib* you make sure that you take the medicine regularly and you will recover. *ʕir-rakk[a] ɛala* it's up to, it depends on, as in *ʕiḥna raḍyiin laakin ir-rakk[a] ɛaleeku* we're content but it's all up to you, *ʕir-rakk[a] ɛar-riggaala* it all depends on the men.

تركيكة *tarkiika* /n pl *tarakiik*/ excuse, pretext.

اتركّك *ʕitrakkik* /vi/ to use a pretext. *ʕinta b-titrakkik ɛala kalaam-u ɛafaan ma-tgii-ʃ* you are using what he said as an excuse not to go. *kull' ma yiigi door-u yitrakkik ɛala ḥaaga ɛafaan ma-yidfaɛ-ʃ* every time his turn comes he finds excuses for not paying. *taɛaala ma-titrakkik-ʃ* come along; don't try to wriggle out! - vn *tarkiik*; ava *mitrakkik*.

ر ك ك [2]

ركاكة *rakaaka* /n/ weakness, feebleness (of language).

ركيك *rakiik* /adj/ weak, poor, defective (of language). *targama rakiika* poor translation. *luɣat-u rakiika* he uses language incorrectly.

ر ك ك [3]

ركّة *rukka: ɛilm (*or *ʧibb) ir-rukka* quack medicine.

ر ك ك و ه

ركّوه *rukukuuh* <perh Fr> /n/ rococo. ‖*ɣurzit rukukuuh [needlew]* French knot.

ر ك ل ا ج see ر ك ل ا ش : *riklaaj*

ر ك ل ا ش

ركلاش *riklaaf* (also *riklaaj*) <Fr *réglage*> /n/ *[mech]* regulating, adjusting. *riklaaf ɛarabiyya* car tuning. - also *riglaaf, riglaaj*.

ر ك ل ا م

ركلام *riklaam* <Fr *réclame*> /n pl *-aat*/ advertisement.

ر ك م [1]

اتراكم *ʕitraakim↑* /vi/ to accumulate, mount, pile up. - vn *taraakum*; ava *mitraakim, mutaraakim*.

ر ك م [2] see ر ك ا م : *rukaama*

ر ك ن

ركن *rakan (i)* **1** /vt/ **1a** to put aside. *ḥ-arkin il-fluus di liz-zaman* I'll set this money aside for a rainy day. ‖*rakan il-ɛarabiyya* he parked the car. **1b** to shelve, leave undealt with. *ʕil-muwaẓẓafiin bi-yirkinu g-gumhuur bis-saɛaat* the officials keep the public waiting by the hour. **2** /vi/ to halt, come to a stop. *ʕirkin hina ya rayyis* stop here, driver! *ʕis-saaɛa b-tirkin* the watch keeps stopping. *ʕil-ḥuṣaan bi-yirkin* the horse balks. - vn *rakanaan, rakn*; ava *raakin*; pva *markuun*.

ركنه *rakna* /n pl *-aat*/ instance noun of *rakn*. ‖*stib-ak ya*

waad min ir-rakna di stop this lazing around doing nothing, my boy!

ركن *rukn* /n pl *ʃarkaan*/ **1** corner. **2** essential, basic, corner-stone. *ʃarkaan id-diin* the essentials of religion. *ʃarkaan if-ʃiik* the essential information that must be put on a cheque by the signatory to make it valid (i.e., date, amount, signature etc.). ‖ *ʃarkaan ḥarb [mil]* general staff. *-raʃiis ʃarkaan [mil]* chief-of-staff. *-rukn*^{i} *gaamid* an influential man. **3** corner motif in tent appliqué work (see Pl.H, 23).

ركنى *rukni* /adj/ corner. *ḍarba rukniyya [soccer]* corner kick.

اتركن *ʃitrakan* /vi/ **1a** to be put aside. ‖ *ʃana ɛaawiz ʃatrikin ɛal-maɛaaf* I want to retire. **1b** to be shelved, be left undealt with. **2** to lean. ‖ *ʃilli yitrikin ɛalee yitrikin ɛala ḥeeṭa mayla* (who leans on him leans on a leaning wall) he's not to be relied on. - ava/iva *mitrikin*.

ركّن *rakkin* /vt/ *[sport]* to put (a ball) into a corner (e.g., of a tennis court). - vn *tarkiin*; ava/pva *mirakkin*.

ارتكن *ʃirtakan* /vi/ to rely, depend. - ava *mirtikin*.

ر ك ى [1]

راكى *raaka* /vt/ *[naut]* to dock (a ship), berth (a ship). - vn *mirakiyya*; ava/pva *miraaki*.

اتراكى *ʃitraaka* <It *attraccare*> /vi/ *[naut]* to dock, berth (of a ship). *munawrit taraaki* berthing manoeuvre. - vn *taraaki*; ava *mitraaki*.

ر ك ى [2]

راكية *rakya* /n pl *aat*/ bonfire. *rakyit naar* open fire, camp-fire.

ر ل ت ت

روليت *rulitt* <Fr *roulette*> /n pl *-aat*/ **1** dressmaker's tracing-wheel. **2** roulette.

ر ل ل ا

رولّة *rulla* <Engl> /n/ decorator's roller.

ر ل و ه

روله *rulooh* <Fr *rouleau*> /n pl *-aat*/ roller (for setting hair), hair-curler.

ر ل ى ه

ريليه *rileeh* <Engl> /n pl *-aat*/ *[elec]* relay switch.

ر م ا ن see also ر و م ا

رومانى *rumaani* /adj */ Roman. *ʃil-muṣarɛa r-rumaniyya* Roman-style wrestling.

ر م ت ز م

روماتزم *rumatizm* <prob Engl> /n/ rheumatism. - also *maratizm*↓, *muraṭizm*↓, *marmatizm*↓.

ر م ح

رمح *ramaḥ (a)* **1** /vt/ to cause (a horse, donkey etc.) to gallop. *ma-tirmaḥ-ʃ il-ḥuṣaan wi-huwwa ʃaarib* don't gallop the horse after it has been drinking. **2** /vi/ to gallop, charge (especially of a horse, donkey etc.). *ṭuul in-nahaar bi-nirmaḥ wara l-ʃawraaq di* all day we've been charging about after those papers. ‖ *zimma yirmaḥ fiiha wabuur* a conscience broad enough for a train to charge about in, a somewhat elastic conscience. - vn *ramḥ, rimaaḥa*; ava *raamiḥ, raamiḥ*.

رمح *rumḥ* /n pl *rimaaḥ, rumuuḥ*/ **1** lance, javelin. ‖ *ɛala sinn*^{i} *w-rumḥ* ≈ well-known, renowned, as in *ʃana zakiyya bint il-ḥagg*^{a} *ɛali l-fakahaani ɛala sinn*^{i} *w-rumḥ* I'm Zakiyya, the daughter of Hagg Ali the fruit-seller, the biggest bigshot in the neighbourhood. **2** upright handle of a plough (see Pl.D, 18). **3** welding electrode, welding-rod.

رمّاح *rammaaḥ* /n */ spearman, lancer.

مرماح *mirmaaḥ* /n/ *[obsol]* race course. ‖ *ʃooḍa zayy il-mirmaaḥ* a very spacious room. *-ṭiliɛ yigri bil-mirmaaḥ* he took to his heels.

رمّح *rammaḥ* /vt/ to cause to gallop. - vn *tarmiiḥ*; ava *mirammaḥ*.

ر م خ

رامخ *raamix* /coll n/ fermented unripe dates.

ر م د [1]

رمدان *ramdaan* /adj/ infected with ophthalmia (of the eyes), suffering from ophthalmia.

رمد *ramad* /n/ ophthalmia, inflammation of the eyes. *ramad ṣadiidi* purulent ophthalmia. *ramad ḥubaybi* trachoma.

رمدى *ramadi* /adj/ pertaining to ophthalmia.

رمديّة *ramadiyya*↓ /n/ eye hospital.

رمّد *rammad* /vi/ to develop ophthalmia, get sore eyes, get sore (of the eyes). - vn *tarmiid*; ava *mirammad*.

ر م د [2]

رماد *rumaad* /n/ **1** ash. *rumaad sigaara* cigarette ash. *ʃarbaɛ ir-rumaad [Chr]* Ash Wednesday. **2** earth, soil.

رمادى *rumaadi* /adj/ grey.

ر م ر م

رمرم *ramram* /vi/ **1a** to scavenge. *ʃil-firaax bi-tramram fiz-zibaala* the chickens scavenge off the rubbish. **1b** to

eat continual small snacks between meals. *ma-b-yistafid-ʃ' mil-ʕakl[a] ɛaʃaan ţuul in-nahaar bi-yramram* the food's wasted on him because he spends the whole day stuffing himself with snacks. **2** to mix with those below one's station, go slumming. *ʕig-gamɛa ramramit* the university is taking in all and sundry. - vn *ramrama*; ava *miramram*.

رمرام *rumraam* /n pl *ramariim/* **1** leftover leaves and other debris of harvested crops. **2** good-for-nothing person, poor weak and pitiably useless person.

رمرام *rimraam* /n/ low scavenging person, one totally devoid of pride.

رمروم *ramruum* = *rumraam*.

ر م ز

رمز *ramaz↑ (u, i)* /vi/ to be symbolic, stand as a symbol. *ʕil-bint illi b-tiẓhar fiṣ-ṣuura b-turmuz lik-kiniisa l-masiḥiyya* the girl who appears in the picture symbolizes the Christian church. - vn *ramz*; ava *raamiz*; pva *marmuuz*.

رمز *ramz* /n pl *rumuuz/* symbol, sign. ‖*bir-ramz* in code.

رمزى *ramzi* /adj/ symbolic. *ʕiţ-ţalaba b-yaxdu mablaɣ ramzi bass* the students are paid only a token sum.

رمزيّة *ramziyya* /n/ symbolism.

رمزيّات *ramziyyaat* /pl n/ symbols, cipher, code.

رمّز *rammiz* /vt/ to assign a symbol or code to. - vn *tarmiiz*; ava *mirammiz*.

ر م س see ر م ى س : *ramiis*

ر م ش

رمش *ramaʃ (i)* /vi/ to blink (as a nervous habit), wink. ‖*miʃ ɋaadir yirmiʃ* (he can't bat an eyelid) he's petrified with fright. - vn *ramʃ, ramaʃaan*; ava *raamiʃ*.

رمشة *ramʃa* /inst n, pl *-aat/* a wink, a blink.

رمش *rimʃ* /n pl *rumuuʃ/* eyelash. ‖*ɋarab* (or *raɋaɛ* or *razaɛ* etc.) *rimʃ* to give a look through narrowed eyes (implying either coquetry or malicious envy), as in *ḥ-arɋaɛ-ha kaam rimʃ agib-ha l-ʕarḍ* I'll shoot her a few piercing glances and knock her flat, *ɋarabit-u rimʃ' ɛiyi min saɛit-ha* she shot him an evil look and he fell sick then and there. - *rimʃ il-ɛeen* light cheap fabric with a narrow woven stripe.

رمشة *rimʃa* /unit n/ an eyelash.

مرمّشاتى *mirammiʃaati* /n pl *-yya/* one who constantly winks or blinks.

ر م ض

رمضان *ramaḍaan* /n/ Ramadan, ninth month of the Muslim year, during which Muslims fast daily from dawn to sunset. *ramaḍaan kariim* traditional greeting used during this month (to guests ≈ sorry not to offer you any food because of the fast).

ر م ق

رمق *ramaɋ* /n/ spark of life. *ma-ɛad-ʃ' fiyya ramaɋ* I am on my last legs. *liḥiɋ il-ɋaṭr[a] ɛala ʕaaxir ramaɋ* he just caught the train when he was on the point of collapsing. ‖*luɋma tsidd' ramaɋ-ha* a bite of food to keep her going.

ر م ل [1]

رمل *raml* /n pl *rimaal↑*/ sand. ‖*ḥagar raml* sandstone. - *ɋarb ir-raml* divination by sand.

الرمل *ʕir-raml* /prop n/ the beach at Alexandria from Victoria to Mahattet el-Raml and the district behind it.

رملة *ramla* /n/ **1** /coll n/ = *raml*. **2** /unit n, pl *-aat/* a specific lot or kind of sand. *ʕir-ramla di ma-tinfaɛ-ʃ' lil-buna* this sort of sand is no good for building.

رملى *ramli* /adj/ sandy, pertaining to or consisting of sand. *ʕarḍ' ramliyya* sandy soil. *malɛab ramli* dirt pitch. ‖*ḥagar ramli* sandstone. - *balaḥ ramli* black, elongated variety of date of the *ruṭab* type.

رمّل *rammal* **1** /vt/ to polish with fine sand. **2** /vi/ to become grainy in texture. *ɛasal mirammil* honey which has begun to crystallize. - vn *tarmiil*; ava/pva *mirammil*.

اترمّل *ʕitrammal[1], ʕitrammil[1]* /vi/ to be polished with fine sand. - iva *mitrammal, mitrammil*.

ر م ل [2]

أرملة *ʕarmila, ʕarmala* /n pl *ʕaraamil/* widow. ‖*ʕibn' ʕarmala* one whose bad upbringing has led him to be corrupt.

اترمّل *ʕitrammal[2], ʕitrammil[2]* /vi/ to become a widower or widow. ‖*ʕitrammilit ɛal-ɛiyaal* she devoted herself to her children, refusing to remarry after the death of her husband. - ava *mitrammal, mitrammil*.

ر م م [1]

رمّ *ramm (u)* /vt/ **1** to repair, renovate. **2** to strengthen, revitalize (the body). *ʕakla trumm il-ɛaḍm* (a meal that strengthens the bones) a wholesome meal. - vn *ramm*; ava *raamim*; pva *marmuum*.

مرمّة *miramma* /n pl *-aat/* repair job.

اترمّ *ʕitramm* /vi/ **1** to be repaired, be renovated. **2** to be strengthened, be revitalized. - iva *mitramm*.

رمّم *rammim[1]* /vt/ to restore, renovate. *rammimu baɛḍ il-ʕasaar* they restored some of the historic monuments. - vn *tarmiim*; ava/pva *mirammim*.

ترميم *tarmiim* /n pl *-aat*/ restoration, renovation.
اترمّم *ʔitrammim* /vi/ to be restored, be renovated. - iva *mitrammim*.

ر م م [2]
رمّة *rumma* /n/ all the appurtenances (of s.th.). ‖*xad-u b-rummit-u* ≈ he took it lock, stock and barrel.
رمّة *rimma* /n pl *rimam*/ **1** piece of carrion, something putrid. *ʔiz-zibaala xallit il-beet rimma* the rubbish has made the house putrid. **2** *[abus]* foul person. *ya rimam* you filthy bastards!
رمّم *rammim* [2] /vi/ to become putrid. - ava *mirammim*.

ر م م ا ن
رمّان، رولمان *rummaan* [1] <Engl trade name *Rollman*>: *rummaan bily* ball-bearings.
رمّانة *rummaana* [1] /unit n, pl *-aat*/ **1** a ball-bearing. **2** a spherical castor.

ر م ن [1]
رمّان *rummaan* [2] /coll n/ pomegranate(s).
رمّانة *rummaana* [2] /unit n, pl *-aat*/ **1** a pomegranate. **2** movable counterpoise of a steelyard. **3** fetlock.
رمّاني *rummaani* /adj invar/ dark red in colour.

ر م ن [2] see ر م ا ن : *rumaan, rumaani*

ر م ى
رمى *rama (i)* /vt/ **1a** to throw, fling. *ramit nafs-a-ha mik-kubri* she threw herself from the bridge. *ʾbaṣṣeet laqeet faḫḫaat raami gittit-u ʕalayya* suddenly a beggar rushed upon me. *raaḥ marmi fil-ʔarḍ* he collapsed on the ground. ‖*ʔirmi bayaaq-ak* cross my palm with silver! (said by fortune-tellers). - *ramaa-li salaam* he extended a greeting to me. - *rama ʕaleeha yamiin* he uttered an oath of divorce against her. - *rama gawaab* to post a letter. **1b** to shoot, shoot at. **1c** to play, lay (a card). ‖*rama ʕaleeha fluus* to stake money on it. **1d** to throw out, throw away. *ʔirmi z-zibaala* throw out the garbage! **1e** to desert, leave neglected. *sibt-i-ni mbaariḥ marmi hina* yesterday you left me here high and dry. **2** to produce, yield. *bi-yirmi ward*[a] *ʔaṣfar* it produces yellow flowers. *ʔil-faddaan bi-yirmi ʕafar ʔaraadib ʔalla* each feddan yields ten ardebs of wheat. **3** *[constr]* to lay or cast (concrete). *ramu l-xarasaana* they laid the concrete. *ramu (xarasaanit) il-ʔasaas* they laid (the concrete for) the foundations. *ramu s-saqf* they laid the (concrete) roof. *ramu l-ʕimdaan* they cast the (concrete) pillars. — /vi/ **4** *[rur]* to give a feeding (to an animal). *ʔirmi lil-baqara* feed the cow. **5** *[coarse]* to ejaculate, shoot one's lot. - vn *ramy*; ava *raami*; pva *marmi*.
¶ *rama ʕala* (1) to lead to. *ʔif-faariʕ bi-yirmi ʕala xaraaba* the street leads to a patch of waste ground. (2) to aim at, take sights on. *bi-yirmi ʕala l-ʕalaama* he aims at the marker. *hiyya ramya ʕenee-ha ʕala ḫadd[i] taani* she has her eye on someone else.
رمية *ramya* /inst n, pl *-aat*/ **1** a throw. *kull-u-hum bi-yitrimu nafs ir-ramya* they all come to the same bad end. **2** a shot. **3** *[agric]* a quantity (of, e.g., wheat) threshed at one time.
رميّة *rimiyya* /n/ one worthy only of neglect, one not worth bothering about.
رماية *rimaaya* /n/ shooting (as a sport).
مرمى *marma* /n pl *maraami*/ **1** *[sport]* goal (i.e. at which one aims). **2** range. *marma l-bunduqiyya* the range of the rifle.
اترمى *ʔitrama* /vi/ passive of *rama*. - iva *mitrimi*.
رمّى *ramma* /vt/ **1** to throw (a number of objects, or a number of times). **2** to discard in quantity. - ava/pva *mirammi*.
مرمّى *mirammi* /adj */ lying around in abundance, found in abundance and therefore neglected.
اترمّى *ʔitramma* /vi/ to be thrown (of a number of objects, or a number of times). - iva *mitrammi*.

ر م ى س
رميس *ramiis* <Fr *remise*>: *ʕarabiyya* (or *taks[i]*) *ramiis* *[obsol]* provincial taxi or hire car without a meter.

ر م ى و
روميو *rumyu* <prop name> /n/ Romeo, big-time lover.

ر ن ج
رنجة *ringa* <Gr *renga*> /coll n/ smoked herring(s), kipper(s).
رنجاية *ringaaya* /unit n, pl *-aat*/ a smoked herring, a kipper.

ر ن خ
رنخ *rannax* **1** /vt/ to soak, steep (until rotten or fermented). **2** /vi/ to lie idle, do nothing. *ʔaṣḥaab-ak qarrabu yiṭlaʕu ʕal-maʕaaf wi-nta lissa mrannax fis-sanawi* your friends are almost ready to go on a pension and you're still stuck in secondary school! - vn *tarniix*; ava/pva *mirannax*.

(ر ن د)
رند *rand* /n/ *[bot]* bay.

روند *rund* <Fr *ronde*> /n pl *-aat/ [mus]* semibreve, whole note.

ر ن د ا د

روندا *rundaad* <Fr *rondade*> /n pl *-aat/ [gym]* take off, spring.

ر ن د ف و

رندفوه *randifuuh* <Fr> /n pl *-aat/* rendezvous (particularly of lovers).

(ر ن ك)

رنك *rank* /n pl *runuuk/* circular piece in tent appliqué work (see Pl.H, 19).

رنك *rank: hank' w-rank* see *hank*.

ر ن م

رنم *rannim* or *rannim* /vi/ *[Chr]* to chant (hymns, responses etc., in unison). - vn *tarniim, tarniim*; ava *mirannim, mirannim*.

ترنيمة *tarniima* /n pl *-aat, taraniim/ [Chr]* hymn.

ر ن ن

رن *rann (i)* /vt/ **1** to ring. *rinn ig-garaz ɛafaan yiṣḥu* ring the bell so they'll wake up! **2** to hit hard. *xud il-wad-da rinn-u* take this boy and give him a beating! *ḥ-arinn-ak ɋalam yiṭayyar ɛeen-ak* I'll give you a slap on the face that'll knock out your eye! – /vi/ **3** to emit a bell-like sound. *ʕit-tilifoon bi-yrinn* the telephone is ringing. *ṣot-ha baɋa yrinn' fil-ʕooɋa* her voice was ringing through the room. *ʕil-ɋalam baɋa yrinn[a] ɛala ɋafaa* the blows resounded on the back of his neck. **4** to go hang, go to the dogs. *miraat-u sabit-u yrinn* his wife let him go to the dogs. *xallii yirinn* let him go to hell! - vn *rann, raniin*; ava *raanin*; pva *marnuun*.

رنّة *ranna* /inst n, pl *-aat/* a ringing sound. *ʃanna w-ranna* see *ʃanna*.

رنّان *rannaan* /adj */ ringing, jingling reverberating, resounding. ‖*ʃooka rannaana [mus]* tuning-fork.

اترنّ *ʕitrann* /vi/ passive of *rann*. - iva *mitrann*.

ارتنّ *ʕirtann* = *ʕitrann*. - ava *mirtann*.

(ر ه)

راء *rih[1]* /fem n, pl *-aat/* tenth letter of the Arabic alphabet. - also *raa, raaʕ*.

ره *rih[2]* <It *re*> /n/ king (in cards).

ريه *rih[3]* <perh It *re*> /n/ *[mus]* **1** re. **2** the note D.

ر ه ب

رهب *rahab[1] (a)* /vt/ to find terrifying. *rahabt il-manẓar* I was terrified by the sight. - vn *rahba*; ava *raahib*; pva *marhuub*.

رهب *rahab[2] (i)* /vt/ to terrify. *ʕil-manẓar rahab-ni* the sight terrified me. - ava *raahib*; pva *marhuub*.

راهب *raahib* /n/ **1** /pl *ruhbaan/ [Chr]* monk. **2** /pl *rawaahib/* pointer (shaped like a praying monk) on the scale of a weighing-machine (which, when exactly opposite its fellow, indicates that the scales are level). see further under ر ه ب ن

راهبة *rahba* /n pl *-aat/ [Chr]* nun.

رهيب *rahiib* /adj/ terrible, awful, terrific. *mataaɛib rahiiba* terrible inconveniences. *kimmiyyaat rahiiba* terrific quantities.

إرهاب *ʕirhaab* /n/ intimidation, terrorism.

إرهابي *ʕirhaabi* /n */ terrorist.

ر ه ب ن see also ر ه ب

رهبنة *rahbana* /n/ *[Chr]* monasticism.

اترهبن *ʕitrahban* /vi/ **1** *[Chr]* to become a monk or nun. **2** to remain unmarried. - ava *mitrabhin*.

ر ه د ل

رهدل *rahdil, rahdil* **1** /vt/ to pull out of shape. *law iʃ-ʃaraab maɋaas-u ma-kanit-ʃ' rigl-u rahdilit-u kida* had the socks been his size, his foot would not have made them so out of shape. **2** /vi/ to become flabby, become out of shape. *gism-u rahdil mil-ɛaya* his body became flabby because of illness. ‖*hiduum-u mrahdila* his clothes are untidy. - *maa-lu kida mrahdil fi-hduum-u* why is he so unkempt! - vn *rahdala*; ava/pva *mirahdil*.

اترهدل *ʕitrahdil* /vi/ passive of *rahdil*. - iva *mitrahdil*.

ر ه ر ط

رهرط *rahraṭ* **1** /vt/ to loosen, make baggy or flabby. **2** /vi/ to become loose, become baggy, become flabby.

رهريط *ruhreeṭ* <Copt> /n/ wet mud.

اترهرط *ʕitrahraṭ* /vi/ **1** to become flabby, become soft. **2** to be made flabby. - ava/iva *mitrahraṭ*.

ر ه ف

رهيف *rahiif= ruhayyif*.

رهّيف *ruhayyif* /adj */ delicate, sensitive. *ɛayyil ruhayyif* a delicate child. ‖*ɋalb-u ruhayyif* he has a soft heart.

أرهف *ʔarhaf* /el/ more/most delicate.

مرهف *murhaf* /adj/ delicate, sensitive. (of feeling or senses).

رهّف *rahhaf* /vt/ to make soft, make delicate. *ɛiʃt-u n-nawaɛmi di rahhafit-u* this easy life of his has softened him. - vn *tarhiif*; ava/pva *mirahhaf*.

اترهّف *ʔitrahhaf* /vi/ to be made delicate, be made soft. - iva *mitrahhaf*.

ر ه ق [1]

مراهق *muraahiq* /n */ teenager, adolescent, immature person.

مراهقة *murahqaˀ* /n/ adolescence, immaturity.

ر ه ق [2]

أرهق *ʔarhaqˀ* /vt/ to exhaust, wear out. *ma-tirhiq-haa-ʃ bi-ṭalabaat-ak* don't overwhelm her with your demands. - vn *ʔirhaaq*; ava *murhiq*; pva *murhaq*.

ر ه م

مرهم *marham* /n pl *maraahim*/ ointment, salve. ‖ *ʔiid-u marham* his very touch is soothing. - *kalaam-u marham* his words are soothing.

ر ه ن

رهن *rahan (i)* /vt/ **1** to pawn. *hiyya rahna sivit-ha* she has pawned her jewelry. **2** to mortgage. **3** to keep (s.o.) waiting for a long time. *ʔinta ḫa-tirhin-ni ʕandak leeh* why are you keeping me hanging about like this? - vn *rahn*; ava *raahin*; pva *marhuun*.

رهن *rahn* /n pl *ruhunaat, ruhuun*/ **1** pawn, deposit. *ʔil-qazaayiz ʕaleeha rahn* there's a deposit on the bottles. ‖ *rahn it-taḥqiiq [leg]* under investigation. - *kaan raḫn iʃart-i* he was at my beck and call. **2** *[bank]* mortgage.

رهينة *rahiina* /n pl *rahaayin*/ **1** hostage. **2** pledge, something given as a pledge, surety.

اترهن *ʔitrahan* /vi/ **1** to be pawned. **2** to be mortgaged. **3** to be kept waiting. - iva *mitrihin*.

راهن *raahin* /vt/ to bet with. - vn *rahaan, murahna*; ava *miraahin*.

رهان *rahaan* /n pl *-aat*/ sum of money wagered (between two parties). *min ɣeer rahaan* without any bet, (just) for fun.

مراهنات *murahnaat* /pl n/ bets (laid, e.g., on a race). *ḍariibit murahnaat* taxes paid on wagers and bets.

اتراهن *ʔitraahin* /vi/ **1** to make a bet. **2** passive of *raahin*. - ava/iva *mitraahin*.

ر ه و ا ن

رهوان *rahawaan* <T *rahvan* from P> /n/ young and powerful horse. *zayy ir-rahawaan* very fast.

ر و ا ن

روانة *rawaana* <T *revani* from P> /n/ *[rur]* type of hard cake (made with a mixture of corn and wheat flour, eggs, sugar, clarified butter and a raising agent).

ر و ب [1]

راب *raab (u)* /vi/ to curdle (of milk). - vn *rawabaan*; ava *raayib*.

رايب *raayib* /adj/ curdled (of milk). *laban raayib* curdled milk. ‖ *qaṭaʕ il-ḫaliiba wir-rayba* (he cut off the fresh milk and the curdled) he cut off all his help, as in *ʔabuu qaṭaʕ ʕannu l-ḫaliiba wir-rayba* his father cut him off without a penny.

روب *roob [1]* /n/ thin paste, mixture (of, e.g., cement, mud) with a high proportion of water.

روبة *rooba* /n pl *-aat*/ unit noun of *roob*.

روّب *rawwib* /vt/ **1** to curdle (milk). ‖ *rawwib zabaadi* to prepare yoghurt (from milk). **2** to add water to (s.th. dry) to make a paste or mix. - vn *tarwiib*; ava/pva *mirawwib*.

اتروّب *ʔitrawwib* /vi/ **1** to be curdled (of milk). **2** to have water added so as to make a paste. - iva *mitrawwib*.

ر و ب [2]

روب *roob [2]* <Fr *robe*> /n pl *ʔarwaab*/ **1** dressing gown, house-coat, bathrobe. **2** *[acad]* gown.

ر و ت ر

روتر *rootar* <prop n *Reuter*> /n/ newsmonger.

ر و ج [1]

راج *raag (u)* /vi/ to flourish, be or become current or in demand. *ṣinaaʕa rayga* a booming industry. *di rayga fis-suuq* this is selling briskly. - vn *rawaag, rawaag, rawagaan*; ava *raayig, raayig*.

روّج *rawwag* or *rawwig* /vt/ to help to thrive, promote. *tarwiig il-ʔifaʕaat* the spreading of rumours. - vn *tarwiig*; ava *mirawwig*.

اتروّج *ʔitrawwag* or *ʔitrawwig* /vi/ to be promoted, be backed. - iva *mitrawwag, mitrawwig*.

ر و ج [2]

روج *ruuj* <Fr> /n/ rouge. ‖ *ṣubaaʕ ruuj* a lipstick.

ر و ح

راح *raaḥ [1]* /vi/ **1** to go. *bi-truuḥ if-fuvl imta* when do you go to work? *ruuḥ min hina* go away! ‖ *min hina w-raayiḥ* from this point on. *-raayiḥ gayy* there and back, as in *bi-yikkallif xamsiin qirf[i] raayiḥ gayy* the return trip costs fifty piastres. - *miʃ ʕaarif (la) yiruuḥ wala yiigi* he is stuck, he is stranded, as in *miʃ ʕarfa (la) ʔaruuḥ wala*

ʕaagi mil-ɛiyaal dool I am stuck because of these kids. - la raaḥ wala ga insignificant, as in humma tneen gineeh la raahu wala gum they are merely two pounds. - ḥa-yruḥ-laha il-... a whole ... will go, as in ɛala ma-yirgaɛ ḥa-tkuun raaḥit laha l-gumɛa by the time he returns, a whole week will have gone by, ɛala ma nidfaɛ il-xiliww' wi-nbayyaq iʃ-ʃaqqa wi-ngaddid il-ɛaffᵃ ḥa-truḥ-laha l-xamast alaaf gineeh by the time we have paid the key-money, redecorated the flat, and renewed the furniture, it (the expenses) will have cost as much as five thousand pounds. **2a** to go (for good). ʕil-maḥfaẓa raaḥit minni fis-suuq I lost the wallet in the market. ʕilli raaḥ raaḥ what's gone is gone. ḥadsa kaan mumkin yiruuḥ fiiha an accident in which he could have been a goner. ‖ ʕir-raagil ḥa-yruuḥ minni the man (my husband) is dying on me. - ʕana ruḥt' xalaṣ I'm done for. - ya raaḥit ya gat win or lose, as in ʕidxul fil-beɛaa-di ya raaḥit ya gat join in this deal and take the risk. **2b** to disappear, fade away. buqɛit iʃ-ʃaay ma-truḥ-ʃ' bil-mayya a tea stain does not come out with water. ʃakl-u raaḥ ɛan baal-i I cannot remember what he looks like. **3** /preverb/ to up and (do s.th.), go and (do s.th.). b-abuṣṣ-i-lu qaam raaḥ ḍarib-ni I was just looking at him, and he went and hit me. ʕig-gineeh wiqiɛ fi-balkonit-ha raaḥit mixabbiyyaa the pound note fell on her balcony and straight away she rushed and hid it. - vn mirwaaḥ, rawaḥaan; ava raayiḥ.

¶ raaḥ ɛala (1) to go unperceived by, happen without the comprehension of (s.o.). kalaam-u bi-yruuḥ ɛaleehum the things he says are beyond them. ma-truḥ-ʃ' ɛalee ḥaaga he doesn't miss a thing. raaḥit ɛalee nooma he overslept. (2) to slip from the grasp of, be lost to. ʕahu maat wil-filuus illi stalaf-ha minni raaḥit ɛalayya now he's dead and I'll never get back the money he borrowed from me. raaḥit ɛalee l-furṣa he missed the opportunity.

راح raaḥ² /w foll imperf/ particle indicating future action. ʕana miʃ raaḥ ʕakallim-ak taani I'm not going to speak to you again. raaḥ yiigu ʕimta when are they going to come?

روح rooḥ /fem n, pl ʕarwaaḥ/ **1** soul, spirit. ʕil-gism' wir-rooḥ the flesh and the spirit. xasaayir fil-ʕarwaaḥ fatalities, loss of life. ʕilli fiih rooḥ who(ever) is still alive. ɛilm il-ʕarwaaḥ occult science, black magic. taḥḍiir il-ʕarwaaḥ calling up spirits. ‖ bi-sabaɛt irwaaḥ with a charmed life, with nine lives. - rooḥ-u ṭilɛit (1) he died. (2) he was exasperated. - bi-yṭallaɛ fir-rooḥ he is dying. - rooḥ-i baqit fi-manaxiir-i I reached the end of my tether. - roḥ-ha ḥilwa she is good-natured. - yurudd ir-rooḥ (returns the departing soul to the body) pleasing, as in kalam-ha yrudd ir-rooḥ she is very nice to talk to. - ya rooḥ-u ʕilli ... how great is his patience that he ..., as in ya roḥ-hum illi qadriin yiɛiifu maɛa n-naas di how patient they are to be able to live with these people! - ma-ɛand(-)ʃ rooḥ li- to have no patience with, as in ma-ɛandii-ʃ rooḥ lil-ɛiyaal I have no patience with children. - ya rooḥ-i term of endearment ≈ dear, darling. - rooḥ-i ḥa-truuḥ (1) I'm going to faint. (2) I'm absolutely exhausted. - ʕir-rooḥ bir-rooḥ very dear to one another, as in ʕaṣḥaab ir-rooḥ bir-rooḥ very close friends. - ya rooḥ ma-baɛd-ik rooḥ one has but a single life (in folk stories), as in lamma ramuu fil-mayya qaɛad yiɛaafir wi-ya rooḥ ma-baɛd-ik rooḥ when they threw him in the water he went on fighting for his life. **2** self. qult' l-rooḥ-i I said to myself. faakir rooḥ-ak ʕeeh what do you think you are? leeh titɛibu roḥ-ku kida you shouldn't have taken so much trouble. qatal rooḥ-u he killed himself. waqqaɛit il-ʕaklᵃ ɛala roḥ-ha she spilt the food on herself. ʕil-ɛayyil iṣṣayyar ɛala rooḥ-u the baby wet himself. ‖ kabbᵃ ɛala rooḥ-u (1) he spilt (s.th.) on himself. (2) he ejaculated spontaneously. - naayim ɛala rooḥ-u (he is) unaware of what goes on. - ʃayfa roḥ-ha she pampers herself. - minnu l-rooḥ-u by oneself, as in ʕitɛallimit iṭ-ṭabx' minha l-roḥ-ha she learned to cook all by herself. - ḥa-tmawwit roḥ-ha ɛala ... (1) she is dying to get ..., she is longing for .... (2) she is passionately fond of ..., she is devoted to .... **3** spirit, mood. rooḥ il-haziima defeatism. **4** essence. rooḥ il-yasmiin essence of jasmine. rooḥ il-xall concentrated vinegar. rooḥ in-naʃaadir spirit of ammonia. **5** barrel (of a gun). bunduqiyya b-roḥeen a double-barrelled shotgun. **6** pipe (of a wind instrument).

الروح ʕir-rooḥ /masc/: ʕir-rooḥ il-qudus [Chr] the Holy Spirit. ʕir-rooḥ il-ʕamiin [Isl] the Archangel Gabriel.

روحي rooḥiˆ /adj */ spiritual. ʕabb' rooḥi spiritual father, spiritual mentor.

روحاني roḥaani /adj */ **1** spiritual. **2** spiritually-minded.

روحانيّة roḥaniyya /n/ spirituality.

روحانيّات roḥaniyyaat /pl n/ spiritual teachings, spiritual insights.

أرواح ʕarwaaḥ /coll n/ cheap scented and coloured boiled sweets.

أرواحة ʕarwaaḥa /unit n, pl -aat/ a scented and coloured boiled sweet.

أرواحاية ʕarwaḥaaya = ʕarwaaḥa.

راحة raaḥa' /n/ **1** rest, ease, relaxation, leisure. ʕana b-aḥibb' qillit ir-raaḥa I like to keep active. ‖ ḥasab raaḥit il-qumaaʃ without stretching the cloth (or: mak-

ing allowance for the design of the cloth). *bi-raḥt-ak* at your convenience. *-beet raaḥa [rur]* lavatory. *-bir-raaḥa* slowly and carefully, as in *ʕiṭlaʕ is-sillim bir-raaḥa* take it easy up the stairs! *-ʕir-rayy[i] bir-raaḥa [agric]* gravitational irrigation. *-ʃayl-u ʕala kfuuf ir-raaḥa* treating him luxuriously, feather-bedding him. *-xad raḥt-u* to take one's ease, make o.s. comfortable, as in *ʕuqʕud wi-xud raḥt-ak* sit down and take your ease, *ʕil-mutoor xad raḥt-u* the motor settled to a steady beat. *-taʕab-ak raaḥa* ≈ it's a pleasure to serve you! *-raaḥit il-ʕarwaaḥ* mode in Arabic music beginning on B flat and having E flat and F sharp. **2** /pl *-aat/* rest period, break. *ʕaṭaʕt[i] raḥt-i* I interrupted my leave.

راحة *raaḥa[2]* /n/ palm (of the hand).

ريح *riiḥ[1]* /n/ **1** /pl *riyaaḥ*/ wind. ‖*zayy ir-riiḥ* (as fast) as the wind. *-fooq ir-ṛiiḥ [naut]* to the windward. *-ʕala ʕaaxir ir-riiḥ [naut]* full and by. *-ʕeef yaaxud ir-riiḥ mil-balaaṭ [prov]* (what does the wind take from the tiles?) ≈ how can you get water out of a stone? *-ʕilli yizraʕ ir-riiḥ yuḥṣud il-ʕawaaṣif [prov]* who sows the wind reaps the whirlwind. *-ʕilli tgiib-u r-riyaaḥ taxd-u z-zawaabiʕ [prov]* (what the winds bring the storms take) ≈ easy come, easy go. **2** /pl *ʕaryaaḥ*/ flatulence. *ṭallaʕ riiḥ* he broke wind.

ريح *riiḥ[2] [rur]* **1** /n pl *ʕaryaaḥ*/ side, end. *ʕil-beet maftuuḥ min talatt iryaaḥ* the house is open on three sides. **2** (also *fi-riiḥ*) /prep/ next to, beside. *kaanit ʕaʕda (f-)riiḥ-i* she was sitting next to me.

ريحة *riiḥa* /n pl *rawaayiḥ*/ **1** smell, odour. *ʃammeet riiḥit ir-riḥaan* I smelled the smell of basil. ‖*ma-ḥadd[i]-ʃ yiqbal-lu riiḥa* nobody can stand him. **2** fumes. *gamadaanit nitriik ikkasarit wir-riiḥa btaʕit-ha kalit kull il-ʁasiil* a carboy of nitric acid got broken and the fumes ate away the laundry. **3** perfume. *ʕizaazit riiḥa* a bottle of perfume. **4** essence or concentrate used for flavouring. *ʕaʃaan yiḍayyaʕu k-karfa bi-yzawwidu ʕalee riiḥa* they add extra flavouring to it to get rid of the taint. **5** whiff, trace. *ma-ʕanduu-ʃ riiḥa miz-zooq* he hasn't the least consideration (for others). *·ʕid-dinya ma-fi-haa-ʃ wala riiḥit ir-raḥma* the world contains not a trace of mercy. ‖*qahwa ʕala r-riiḥa* (Turkish) coffee with very little sugar.

ريحان *riḥaan* /n/ sweet basil.

أريح *ʕaryaḥ* /el/ more/most comfortable, more/most convenient.

رياح *rayyaaḥ* /n pl *-aat*/ large irrigation canal.

مروحة *marwaḥa* /n pl *maraawiḥ*/ **1** fan. ‖*naas ʕala qulub-hum maraawiḥ* people who are not easily upset. **2** *[agric]* helical blade of an Archimedes' screw. **3** *[auto]* front quarter vent. — *ʕil-maraawiḥ↓* /pl n/ **4** the lungs.

مروحي *marwaḥi* /adj/ fan-shaped.

مريوح *maryuuḥ* /adj */ **1** demon-possessed. **2** *[deris]* upset.

مريح *muriiḥ* /adj */ easy, comfortable. *kursi muriiḥ* a comfortable chair. *raagil muriiḥ* an easy man to deal with. *ʕaqsaaṭ muriiḥa* easy installments. *mihna muriiḥa* a profitable and genteel profession. ‖*ʃakl-u miʃ muriiḥ* he has a disagreeable appearance.

روّح *rawwaḥ* **1** /vt/ to take or send home. **2** /vi/ to go home. *ʕaayiz ʕarawwaḥ li-ʕahl-i* I want to go home to my folks! *-* vn *tarwiiḥ; mirwaaḥ*; ava/pva *mirawwaḥ*.

¶ *rawwaḥ ʕan in-nafs* to relax, rest. *ʕuqʕud-lak yomeen fi-skindiriyya rawwaḥ ʕan nafs-ak* take a couple of days in Alexandria and have a rest.

التراويح *ʕit-tarawiiḥ* /pl n/ *[Isl]* supererogatory prayer (of eight, twelve or twenty *rakʕas*) performed after the evening prayer in Ramadan.

ريّح *rayyaḥ* /vt/ **1** to give comfort or relief to, ease. *ʃuf-li ʕayy[a] ḥaaga trayyaḥ-ni* find me anything that will give me relief. *ʕil-ḥukuuma ʃuɤl-a-ha ʕinnaha tsahhil ḥayaat in-naas wi-trayyaḥ-hum* it's the government's job to make people's lives easier and more comfortable. *quul ʕinta ʕaayiz ʕeeh biẓ-ẓabṭ - rayyaḥ-ni* tell me what it is exactly that you want - don't keep me on tenterhooks! *ma-tithawwa wi-trayyaḥ-na* go and take an airing and give us a break! *xud in-nooʕ illi bi-yrayyaḥ-ku* take the sort that suits you best. *rayyaḥ baal-ak* (or *qalb-ak*) set your mind at rest! *ḥabbeet ʕarayyaḥ-ak min il-miʃwaar* I wanted to spare you the journey. *tihaddi baal-ak wi-trayyaḥ sirr-ak* she'll calm your mind and give you inner peace (praise of a bride). **2** (also *rayyaḥ min il-ʕiiʃa*) *[slang]* to relieve (of life), kill. **3** to give the correct set to. *nisarraḥ ʕawwil tasriiḥa ʕaʃaan nirayyaḥ ʃaʕr-u* we give a first comb-through to get the set of his hair. *ʕin-naggaar rayyaḥ il-baab* the carpenter fixed the door so that it would open and close easily. **4** *[soccer]* to receive (a ball) on the foot and control and position it. **5** to perfume. — /vi/ **6** to take a rest, take a break. *lamma ʕaʕraq ʕaquum ʕarayyaḥ* when I start sweating I stop and take a rest. *bi-yiftaɤalu wardiyyiteen mitwaṣliin wi-baʕdeen yirayyaḥu yoom* they work two consecutive shifts and then take a day off. **7** to move under force as though seeking something against which to rest. *ʕil-ʕarabiyya rayyaḥit ʕalayya* the car rolled back into me. *ʕil-ḥeeṭa rayyaḥit* the wall settled. *ʕil-ʕagala rayyaḥit minni* the tyre went flat on me. **8** to give off a bad smell. *fii ṣeefi ma-yʕiʃ-ʃ - yiswadd[i]*

wi-ynattin wi-yrayyaḥ there's a summer variety that doesn't last - it turns black and putrid and gives off a bad smell. - vn *taryiiḥ, tarwiiḥ*; ava/pva *mirayyaḥ*.

مريّح *mirayyaḥ* /adj */ **1** in easy circumstances, well-off. **2** calm, deliberate, unflustered.

اتريّح *ʔitrayyaḥ* /vi/ passive of *rayyaḥ*. - iva *mitrayyaḥ*.

اتراوح *ʔitraawaḥ* /vi/ to range, vary. *ʔil-ʔugra b-titraawaḥ ma been gineeh wi-tneen* the wages vary between one and two pounds. - ava *mitraawaḥ*.

ارتاح *ʔirtaaḥ* /vi/ **1a** to rest, relax, take one's ease. *ʔirtaaḥ fis-siriir* take a rest in bed! *laazim tirtaaḥi baʕd il-wilaada* you must take it easy after the birth. *bi-nsiib il-ʔarḍ' mirtaaḥa fahr* we give the land a rest for a month. **1b** to feel comfortable, feel at ease. *bi-tirtaḥ-li* she feels at home with me. *ʔana miʃ mirtaaḥ lig-gamaaʕa di* I'm suspicious of those people. ‖*ḍamiir-u rtaaḥ* his conscience was satisfied. - *ʠalb-u rtaaḥ* he felt relieved. **2** to find relief. *ṭaraʃt irtaḥt* I vomited and felt better. *ʔiddaa-ni birʃaam wi-rtaḥt' ʃwayya* he gave me some pills and I felt a little better. - vn *ʔirtiyaaḥ*; ava *mirtaaḥ*.

ارتياح *ʔirtiyaaḥ* /n/ satisfaction, contentment, pleasure. *bi-rtiyaaḥ* willingly, gladly.

مرتاح *mirtaaḥ* /adj */ in easy circumstances, well-off.

استريّح *ʔistarayyaḥ, ʔistirayyaḥ* /vi/ **1** to rest, relax, take one's ease. *ʔuʕʕud wi-starayyaḥ* sit down and make yourself comfortable! *ʔissanadtᵃ ʕal-ḥeeṭa ʃwayya ʔastirayyaḥ* I leant against the wall a while to rest. - the imperative form *ʔistariiḥ* occurs in the proverb: *ʔil-baab illi yiigi minnu r-riiḥ sidd-u wi-stariiḥ* (shut the door that lets in the wind, and you will have peace) stop up the source of trouble and relax. **2** to feel comfortable, feel at ease. *bi-tistarayyaḥ-li* she feels at ease with me. *ʔana miʃ mistarayyaḥ lil-ḫikaaya di* I don't feel easy about the affair. **3a** to find relief. *baṭn-i tkalbiʃ wi-m-astarayyaḥ-ʃ' ʕeer lamma ʔanaam fis-siriir* my stomach gets tied up in knots and I only feel better if I have a lie-down. **3b** *[euphem]* to die. - ava *mistarayyaḥ, mistirayyaḥ*.

استراحة *ʔistiraaḥa* /n pl *-aat*/ **1a** rest-room. **1b** rest-house. **2** interval, intermission, half-way break.

مستريّح *mistarayyaḥ, mistirayyaḥ* /adj */ **1** in easy circumstances, well-off. **2** well-fitting, capable of moving easily (of, e.g., a lock, a door).

روح ن

روحن *rawḥan* /vt/ to cause (s.o.) to waver, sway (s.o.) in his opinion. - vn *rawḥana*; ava/pva *mirawḥan, mirawḥan*.

مروحن *mirawḥan, mirawḥan* /adj */ easily swayed in one's opinions.

اتروحن *ʔitrawḥan* /vi/ to become or be made uncertain or indecisive. - ava/iva *mitrawḥan*.

رود ¹

رائد *raaʔid* /n pl *ruwwaad*/ **1** guide, leader. ‖*raaʔid ʃabaab* youth leader, youth organizer. **2** pioneer. ‖*raaʔid faḍaaʔ* astronaut. **3** *[mil]* major. *raaʔid baḥri* lieutenant-commander. *raaʔid ṭayyaar* squadron-leader.

رويدا *ruwaydanᵗ* /adv/ slowly, gently.

مرادة *muraada* /n pl *-aat*/ *[rur]* beaten path down to the water's edge where women wash clothes, etc.

رود ²

مرود *marwid* /n pl *maraawid*/ blunt-edged probe for applying *kuḥl* and the like to the eyes.

رو س ¹ see also ر ء س

روّس *rawwis* /vt/ **1** to give a heading to. **2** to tie up (an animal), moor (a ship). - vn *tarwiis*; ava/pva *mirawwis*.

ترويسة *tarwiisa* /n pl *-aat, tarawiis*/ **1** heading (of, e.g., a newspaper article). **2** stake for tethering an animal.

اتروّس *ʔitrawwis* /vi/ **1** to be given a heading. **2** to be tied up (of an animal), be moored (of a ship). - iva *mitrawwis*.

رو س ² see also ر س ي ا

روسي *ruusi* **1** /adj */ Russian. **2** /n/ **2a** the Russian language. **2b** /pl *ruus*/ a Russian.

رو ش

روش *rawaʃ (i)* <perh Copt> /vt/ to distract, disturb. *baṭṭal maʃy' fil-ʔooḍa - rawaʃt-i-ni* stop walking up and down the room - you're unnerving me! - vn *rawaʃ, rawaʃaan*; ava *raawiʃ*; pva *marwuuf*.

روشة *rawʃa* /n/ distractedness, mental confusion. *ʕamaluu-li rawʃa f-dimaaɣ-i* they got me into a tizzy. *da ʔaaxir rawʃa* he's extremely scatter-brained.

مروش *marwuuf* /adj */ scatter-brained, always in a flap.

أروش *ʔarwaʃ* /adj, fem *rooʃa*, pl *ruuf*/ scatter-brained, always in a flap.

رو ش ن

روشن *rooʃan* <P *raushan*> /n pl *rawaaʃin*/ *[obsol]* air vent, skylight.

ر و ض [1]

روض *rooḍ: rooḍ il-farag* /prop n/ district of Cairo, on the east bank of the Nile to the north of Boulak, the site of Cairo's main wholesale fruit and vegetable market.

روضة *rooḍa*[1] /n pl *-aat, riyaaḍ*/ kindergarten.

الروضة *ʔir-rooḍa* /prop n/ Roda, an island in the Nile at Cairo.

رياضة *riyaaḍa* /n/ **1** sports, physical exercise. **2** mathematics.

رياضى *riyaaḍi* /adj */ **1** pertaining to sport. *naadi riyaaḍi* sports club. *tarbiya riyaḍiyya* physical education. *ʔir-rooḥ ir-riyaḍiyya* the sporting spirit, sportsmanship. **2** pertaining to mathematics, mathematical.

روّض *rawwaḍ*ˆ /vt/ to tame. - vn *tarwiiḍ*; ava *mirawwaḍ*.

مروّضاتى *mirawwaḍaati* /n pl *-yya*/ animal trainer.

ريّض *rayyaḍ* /vt/ to exercise. - ava/pva *mirayyaḍ*.

اتروّض *ʔitrawwaḍ* /vi/ to be tamed. - iva *mitrawwaḍ*.

اتريّض *ʔitrayyaḍ* /vi/ to take exercise. - ava *mitrayyaḍ*.

ر و ض [2]

روضة *rooḍa*[2] <It *roda*> /n/ *[naut]* bight (of a rope).

ر و ع

روعة *rawɛa* /n/ marvellousness, splendour, magnificence. *ʔil-ʔaɣaani l-ɋadiima fi-muntaha r-rawɛa* the old songs are really great.

أروع *ʔarwaɛ* /el/ more/most marvellous, splendid, magnificent etc.

رائع *raaʔiɛ* /adj */ marvellous, splendid, magnificent.

رائعة *raaʔiɛa* /n pl *rawaaʔiɛ*/ amazing, impressive or awesome thing. *rawaaʔiɛ il-musiiqa l-ɛarabiyya* the masterpieces of Arabic music.

مريع *muriiɛ* /adj/ terrifying, awe-inspiring.

روّع *rawwaɛ* /vt/ to frighten, awe. - ava/pva *mirawwaɛ*.

ر و ق

راق *raaq*[2] *(u)* /vi/ **1** to become serene, peaceful, clear or uncluttered. *ʔig-gaww*[i] *raaq* the weather cleared. *ʔil-baḥr*[i] *raaq* the sea became calm. *ʔil-mayya raaqit* the water became clear. *ʔiʃ-ʃawaariɛ raaqit* the streets cleared. *xud l-utubiis min ʔawwil il-xaṭṭ*[i] *ykuun raayiq* if you take the bus from the beginning of the line, there'll be plenty of room. *ʔil-muruur maaʃi b-rawaaqa* the traffic is flowing easily. ‖ *ʔig-gaww*[i] *raq-lak* your path is clear. - *baal-u raayiq* (1) his mind is clear of distractions. (2) he's in a good mood. **2** to recover (from sickness), come round. *ɛamalt il-muṣraan wi-ruqt* I had my appendix out and recovered. - vn *rawaaqa, rawaqaan;* ava *raayiq*.

رواقة *rawaaqa* /n/ calmness, clarity, peacefulness, serenity. *ḥ-aɛmil iʃ-ʃuɣl*[i] *badri ɛala rawaaqa* I'll do the work early while I'm fresh and there are no distractions. *bi-yfakkar bi-rawaaqa* he thinks well. *ʔiqraa ɛala rawaaqa* read it when you have some peace and quiet.

رايق *raayiq* /adj/ clear, pure. *mayya rayqa* clear water, translucent water. *ʔalwaan rayqa* clear light colours.

رواق *ruwaaq, riwaaq* /n pl *-aat, ʔarwiqa*/ section of living-quarters, dormitories and workrooms of the students at the old Azhar.

روّق *rawwaq* /vt/ **1** to clear, calm. *ʔiʃ-ʃaay rawwaq muxx-i* the tea cleared my head. *ʔil-buliis rawwaq iʃ-ʃariɛ* the police cleared the street. ‖ *rawwaq (dammak)* calm down! come to your senses! **2** to cause to recover, cause to feel better. *ʔin ʃa-lla z-ziyaara trawwaq-ak ʃiwayya* I hope the visit makes you feel better. **3** to tidy up, set straight. *rawwaqit il-ʔooḍa* she tidied up the room. *rawwaqi s-siriir* tidy up the bed! - vn *tarwiiq*; ava *mirawwaq*.

ترويقة *tarwiiqa* /inst n, pl *-aat, tarawiiq*/ a tidying-up, a freshening-up.

اتروّق *ʔitrawwaq* /vi/ passive of *rawwaq*. - iva *mitrawwaq*.

ر و ك

روك *rook: maal ir-rook [obsol]* public property.

ر و ل [1]

روال *riwaal* /n pl *ʔirwila*/ *[agric]* ridge dividing one irrigation basin from the next (see Pl.E, 20).

روّل *rawwil* /vt/ *[agric]* to prepare the irrigation basins for (a piece of land), by digging out the irrigation ditches and piling up the ridges separating each basin. - vn *tarwiil*; ava/pva *mirawwil*.

اتروّل *ʔitrawwil* /vi/ *[agric]* to have irrigation basins prepared (of land). - iva *mitrawwil*.

(ر و ل) [2]

رول *rool*[1] <Engl> /n pl *-aat*/ *[leg]* agenda.

رول *rool*[2] <perh Engl> /n pl *-aat*/ roll, spool, coil.

ر و م [1]

رام *raam: ɛala ma yuraam*ˆ as one would desire, as in *ʔin-nahar-da ṣiḥḥit-i miʃ ɛala ma yuraam* my health today isn't as good as I would have wished. *kull*[i] *feeʔ kaan ɛala ma yuraam* everything was as it should be.

مرام *maraam* /n/ wish, desire. *ʔeeh maraam-ak mil-ḥikaaya* what do you hope for out of the affair? ‖ *gat ɛal-maraam* it was just what was wanted, it turned out fine.

ر و م [2]

روّم *rawwim* /vt/ to dress (stone). - vn *tarwiim*; ava/pva *mirawwim*.

اتروّم *ʔitrawwim* /vi/ to be dressed (of stone). - iva *mitrawwim*.

ر و م [3]

رومى *ruumi* /pl *ruum, ʃarwaam*/ **1 a**↓ /adj/ Greek. *baqqaal ruumi* a Greek grocer. **1 b**↓ /n/ a Greek. — /invar/ **2** /adj/ of the less common sort, not of the standard local Egyptian sort (in opposition to *baladi* q.v.). *kalb' ruumi* any dog of an identifiable breed, a dog not of a common-or-garden street type. *qutta ruumi* any cat of an identifiable breed, a cat not of a common-or-garden street type. *ʔil-ɛeef dura wil-kalaam ruumi [prov]* the bread is coarse, the talk highfalutin (of pretentiousness). ‖*diik ruumi* turkey cock. - *farxa ruumi* turkey hen. - *filfil ruumi* sweet peppers, bell peppers. - *bidingaan ruumi* large round egg-plants. - *gibna ruumi* type of hard yellow cheese. **3** /coll n/ turkeys.

روم *ruum* /coll n/ members of a Greek-speaking church. *ruum urtuduks* Greek Orthodox. *ruum katuliik* Greek Catholic(s). *huwwa ruum katuliik* (or *ruum katuliiki*) he is a Greek Catholic.

ر و م ا

روما *rooma* <It *Roma*> /prop n/ Rome. see further under ر م ا ن

ر و ن see ر و ا ن : *rawaana*

ر و ن د

راوند *rawind* /coll n/ rhubarb.

ر و ن ق

رونق *rawnaq* /n/ brightness, glitter, glamour.

ر و ى [1]

روى *rawa' (i)* /vt/ **1** to irrigate. *ʈurumbit rayy* irrigation pump. **2** to quench (thirst), satisfy the desires of (s.o.). ‖*yirwi l-qalb* it refreshes the heart, as in *kalaam-u farbaat yirwi l-qalb* he talks beautifully, it's refreshing to hear him, *ʔilli yirwi l-qalb [vendor's cry]* (cool syrup) that refreshes the heart! - vn *rayy, riwiyya*; ava *raawi*; pva *marwi*.

ريّة *rayya* **1** /inst n, pl *-aat*/ a (single) irrigation. **2** /prop n/ female given name. *rayya wi-skiina* two notorious murderesses active in Alexandria in the nineteen-thirties.

ريّان *rayyaan* /adj/ well-watered, fresh and green, not withered. *rayyaan ya figl [vendor's cry]* fresh juicy radishes!

التروية *ʔit-tarwiya: yoom it-tarwiya [Isl]* the day before *yoom ɛarafaat* on which pilgrims prepare themselves by filling their water-pots, washing, donning the *ʔiḥraam*, if they are not wearing it, etc.

اترى *ʔitrawa' /vi/* **1** to be irrigated. **2** to be quenched (of thirst), be satisfied (of desire). - iva *mitriwi*.

ارتوى *ʔirtawa↑* = *ʔitrawa*.

ر و ى [2]

روى *rawa' (i)* /vt/ to relate, narrate (a story, account). - vn *riwaaya*; ava *raawi*; pva *marwi*.

رواية *riwaaya* /n pl *-aat*/ **1a** novel. **1b** (also *riwaaya tamsiliyya*) stage play. **2** story, account.

راوى *raawi* /n * and pl *ruwaah*/ transmitter, relater, narrator.

روائى *riwaaʔi* **1** /n */ novelist. **2** /adj */ fictional. *film' rwaaʔi* fiction film.

اتروى *ʔitrawa'* /vi/ to be related, be narrated (of a story, account). - iva *mitriwi*.

اتروّى *ʔitrawwa* /vi/ to reflect, consider, think carefully. *ʔitrawwa qabl' ma tiɛmil ʃayy' ḥaaga* think well before you do anything. - vn *tarawwi*; ava *mitrawwi*.

ر ى ا ل

ريال *riyaal* <Sp *real*> /n pl *-aat, ʔiryila, riyíla*↓/ twenty piastres, twenty-piastre piece.

ر ى ب [1]

ريبة *riiba* /n/ doubt, suspicion.

مريب *muriib* /adj */ suspicious, disquieting.

ارتاب *ʔirtaab* /vi/ to become suspicious. *ma ḥadd'-ʃ bi-yirtaab fi-kalaam-ak* nobody suspects your word. - vn *ʔirtiyaab*; ava *mirtaab*.

ر ى ب [2] see ر و ب [1] : *raayib*

ر ى ت

ريت *reet: ya reet* /also w pron suff/ would that ...! I wish that ...! *ya reet b-aṭul-hum* I wish I could get my hands on them! *ya ret-ni kunt' muhandis* I wish I were an engineer! *ya reet illi gara ma-kaan* I wish what has happened had never taken place! *kilmit ya reet ɛumr-a-ha ma tɛammar [prov]* ≈ building castles in the air gets you nowhere.

ر ى ج

ريجة *riiga* <It *riga*> /n pl *-aat*/ line, groove.

ر ي ح see ر و ح: *riiḥ, riiḥa, riḥaan, ʕaryaḥ, rayyaaḥ, maryuuḥ, muriiḥ, rayyaḥ, mirayyaḥ, ʕitrayyaḥ, ʕirtiyaaḥ, ʕistarayyaḥ, mistarayyaḥ*

ر ي د

راد *raad (i)* /vt/ to want, will. *ʕilli yriid-u llaah huwwa lli ykuun* what God wills is. *ʕilli yriid-ak riid-u wi-lli ṭalab buʕaad-ak ziid-u [prov]* seek those who seek you and those who seek to avoid you avoid with yet greater fervour. - vn *rayadaan*; ava *raayid*.

أراد *ʕaraad*↑ = *raad*. - vn *ʕiraada, ʕaraada*↓; ava *muriid*; pva *muraad*.

إرادة *ʕiraada, ʕaraada*↓ /n/ will, willpower. *ma-luu-ʃ ʕiraada* he has no willpower. *ʕiraadit illaah* the will of God. *bi-ʕiraadit il-mariiḍ* at the patient's request.

إرادى *ʕiraadi* /adj/ pertaining to the will. *maghuud ʕiraadi* an effort of will. *ʕamal laa ʕiraadi* involuntary action.

مريد *muriid* /n */ Sufi novice.

مراد *muraad* /n/ wish, desire. *ʕeeh muraad-ak* what do you want? *muraad-i ʕazuur il-ḥabiib* it's my wish to visit (the tomb of) the Prophet.

ر ي س see ر ء س: *rayyis, rayyisa, riyaasa, ʕitrayyis*

ر ي ش [1]

ريش *riif* /coll n/ feather(s). ‖*furfa riif* a feather duster. *ʕilli yiigi fir-riif baqʃiif [prov]* (that which comes against the feathers is a tip) it is a blessing when damage is sustained only by what is non-essential and not by what is essential. - *riif ʕabu l-ḥuṣeen* wild barley. - *humma natfiin rif-na* they are the cause of our poverty.

ريشة *riifa* /n/ **1** /unit n, pl *-aat*/ a feather. ‖*ʕala raas-u riifa [sarc]* superior person, big shot, as in *taaxud il-ʕawwil leeh huwwa-nta ʕala raas-ak riifa* who do you think you are that you should be the first to take! — /pl *riyaf*/ **2** feather duster. **3** quill pen, dip pen. **4** blade (of a fan or propeller). **5** chop, cutlet. **6** plectrum. **7** lancet. **8** reed of a wind instrument. **9** *[agric]* side of a furrow (see Pl.E, 21).

ريّش *rayyif* /vi/ **1** to put out feathers, grow feathers. **2** to acquire money or material possessions. — /vt/ **3** to dust (s.th.) with a feather duster. - vn *taryiif*; ava/pva *mirayyif*.

اتريّش *ʕitrayyif* /vi/ to become wealthy, be endowed with money or material possessions. - ava *mitrayyif*.

ر ي ش [2] see ر ا ى ش: *raayif*

ر ي ض see ر و ض [1]: *riyaaḍa, riyaaḍi, rayyaḍ, ʕitrayyaḍ*

ر ي ع

ريع *reeʕ* /n/ *[finan]* yield, revenue, interest.

ر ي ف

الريف *ʕir-riif* /used interçhangeably w pl form *ʕil-ʕaryaaf*/ country (as opposed to town), countryside. *min ʕaryaaf damanhuur* from the countryside round Damanhour. *ʕil-ḥikaaya di ktiira fir-riif* this happens a lot in the countryside.

ريفى *riifi* /adj/ rural.

ر ي ق [1]

ريق *riiq* /n/ saliva. *riiq-u giri ʕalee* his mouth watered for it. ‖*ʕala r-riiq* (or, less commonly, *ʕala riiq*) or *ʕala riiq in-noom* on an empty stomach, before breakfasting, as in *taalit yoom taaxud farba ʕala r-riiq* on the third day you should take a purgative on an empty stomach, *bi-ydaxxin ʕala riiq in-noom* he smokes before breakfast. - *ʁayyar ir-riiq* to eat the first meal of the day. - *fakk*ⁱ *riiq-(u)* to have something to eat (after spending a considerable time without food). - *riiq-(u) nifiʃ* ((his) spittle dried) (1) (he) felt thirsty. (2) (he) went to great trouble, (he) worked very hard. (3) (he) became exasperated. - *ball ir-riiq* (1) to take the edge off one's thirst. (2) to be helpful or kind to, offer help to, as in *ʕumr-u ma ball*ⁱ *riiq ḥadd* he is never helpful to anyone. - *balaʕ ir-riiq* to breathe a sigh of relief. - *riiq ḥilw* gentle talk, as in *ʕumr-u gooz-i ma-warraa-ni f-yoom riiq ḥilw* my husband has never spoken to me kindly in his life. - *dawwaq(-u) r-riiq il-murr* to give (s.o.) a hard time.

ر ي ق [2] see ر و ق: *raayiq*

ر ي ل [1]

ريالة *riyaala* /n/ dribble. ‖*ʃuul ʕumr-ak bi-ryaala* you've been an idiot all your life.

مريلة *maryala* /n pl *maraayil*/ **1** bib. **2** apron. **3** smock. *maryalit il-madrasa* school uniform smock. **4** pinafore.

ريّل *rayyil* /vi/ to dribble, drool. - vn *taryiil*; ava *mirayyil*.

¶ *rayyil ʕala [abus]* ≈ set one's eye on. *mirayyil ʕaf-faqqa* he's dead set on the flat.

ر ي ل [2] see ر ى ا ل: *riyaal*

ر ي م [1]

ريم *riim* /n/ scum, foam. ‖*riim il-baḥr* aquatic plants.

ريّم *rayyim* /vi/ **1** to foam, form scum. **2** to practise deceit. *rayyim ʕalayya* he swindled me, he bluffed me. - vn *taryiim*; ava *mirayyim*.

ر ى م [2]

ريمة *riima* invented given name used in proverbs (in combination with the equivalent male given name *miʃkaaḥ*) to signify a good-for-nothing woman. *gawwizu miʃkaaḥ li-riima - ʔaal ma ʕala l-itneen ʔiima [prov]* they married Mishkah to Rima; it was said, 'Both are useless' (of the association of two good-for-nothings). *rigʕit riima l-ʕadit-ha l-ʔadiima* (Rima returned to her old ways) ≈ old habits die hard.

(ر ي و ن)

ريون *riyoon* [1] <Fr *rayon*> /n pl *-aat*/ department (of shop).

ريون *riyoon* [2] <perh Fr *rayonne*> /n pl *-aat*/ rayon.

ر ى ى see [1] ر و ى : *rayy, rayya, rayyaan*

ز

ز ا

ذلك *zaalik* /dem pron/ that.- *maʕa zaalik* despite that. *li-zaalik* or *bi-zaalik* therefore. *ka-zaalik* thus, similarly, likewise. *wa-hwa ka-zaalik* so be it. *wa-ka-zaalik* and so on. ‖*mif min ʕahl' zaalik.* - *laa da zaalik nafs-u [joc]* 'He's not that type.' 'On the contrary; he's the epitome of that type!'

ز ا ت see also ز و

ذات، زات *zaat* /fem n/ **1** self, person, identity. *ma-yḥibb'-ʃ ʕilla zaat-u* he does not love (anyone) but himself. *ʕiz-zaat il-malakiyya* the royal person. *ʕiz-zaat il-ʕilahiyya* the Divine Being. *ḥubb iz-zaat* self-love, selfishness. ‖*fi-yoom min zaat il-ʕayyaam* one day, on one of those days, once upon a time. **2** /w suff or in constr/ itself, (him-, her-etc.) self. *ʕil-mudiir zaat-u* the director himself. *min zaat (nafs) if-firka* from the company itself. *ʕabuu-k zaat nafs-u huwwa lli ʔal-ha* it is your father himself who said it. - *bi-zaat-(u)* (him)self, (her)self etc., in person, as in *huwwa b-zaat-u ga* he came in person, *ʕana b-zaat-i ḥ-aʔul-lu* I shall tell him myself.

¶ *biz-zaat* especially, in particular. *ʕil-ʕixtaar da biz-zaat* this notification in particular.

ذاتي، زاتي *zaati* /adj/ **1a** personal, relating to the person. *taftiif zaati* body search. **1b** individual, relating to the individual. *maghudaat zatiyya* individual efforts. **2** innate, inherent, self-. *ʕil-iktifaaʕ iz-zaati* self-sufficiency. *ʕil-ḥukm iz-zaati* self-rule, autonomy.

¶ *zaatiyyan* /adv/ personally. *ʕaʕraf-u zaatiyyan* I know him personally.

ذوات *zawaat* /pl n/ aristocracy, upper classes.

ذواتي *zawaati* /adj invar/ aristocratic. *ḥayy' zawaati* an aristocratic quarter. *ʕaxlaʔ-ha zawaati* she has very refined ways.

ز ا ج

زاج *zaag* <P *zâg*> /n/ vitriol.

ز ا ر

زار *zaar'* /n pl *-aat*/ ritual of sacrifices, incantations, drumming and dancing performed for the purpose of appeasing any one of a number of spirits by which a person may be believed to be possessed.

ز ا ل

ذال *zaal* /fem n, pl *-aat*/ eleventh letter of the Arabic alphabet.

ز ا ل ك see ز ا : *zaalik*

ز ا ن

زان *zaan'* /n/ **1** beech. **2** beechwood.

زانة *zaana* /n pl *-aat*/ **1** long pole. *liʕb iz-zaana* or *ʕil-wasb' biz-zaana [athl]* pole-vaulting. **2** fixed iron frame for hanging suits and dresses. **3** piece of pitch-pine between the beam of a shadoof and the pail. **4** wooden pick used by an upholsterer.

ز ا ى

زاى *zaay* /fem n, pl *-aat*/ eleventh letter of the Arabic alphabet. - also *zeh, zeen*.

ز ء ب ق see ز ى ب ق

ز ء ر

زأر *zaʕar (a)* /vi/ to roar (of, e.g., a lion). - vn *zaʕiir*; ava *zaaʕir*.

ز ء م

زؤام *zuʕaamʔ* : *ʕil-moot iz-zuʕaam* violent death.

ز ء ن
زؤان *zuʃaan* /n/ *[bot]* darnel.

ز ب ا ط
زباطة *zubaaṭa* <perh Copt> /n pl *-aat, zabaayiṭ*/ cluster, bunch (of dates or bananas). - also *subaaṭa*.

[1] ز ب ب
زبيب *zibiib* /n/ **1** /coll/ raisin(s). ‖*ḍarb il-ḥabiib zayy' ʃakl iz-zibiib [prov]* (a beating from one's beloved is like eating raisins) anything received from one's beloved is sweet. **2** spirit distilled from raisins.
زبيبة *zibiiba* /n pl *-aat*/ **1** /unit n/ a raisin. *ʃilli yaakul ʿadd iz-zibiiba la ygii-lu ʿaya wala mṣiiba [prov]* (who eats as little as a raisin gets neither sickness nor catastrophe) eat little, live long. *sooda zayy iz-zibiiba* as black as a raisin (of a dark-skinned woman). **2** dark mark produced on the forehead as a result of repeatedly touching the ground in (Muslim ritual) prayer.

[2] ز ب ب
زبّ *zibb* /n pl *ʃazbaab, zibaab, zubuub*/ *[coarse]* penis, cock. ‖*zibb il-ʃarḍ* (1) *[bot]* conicum. (2) *[deris]* a short man.

[3] ز ب ب see [4] د ب ب : *zubaaba*

ز ب ح see [1] د ب ح : *zabḥa, zabiiḥa, mazbaḥ, mazbaḥa*

ز ب د
زبدة *zibda* /n/ **1** butter. ‖*bint' zibda* a smashing girl. - *waraq zibda* greaseproof paper. - *zibdit kakaaw* lip salve. ‖*gat-lu zibda ʿala ftiira* ≈ he had it made, things went entirely his way. **2** variety of mango.
زبديّة *zibdiyya* /n/ **1** /pl *-aat*/ crock (for butter, yoghurt etc. **2** /no pl/ variety of mango.
زبد *zubad* /pl n/ gist, most important part. *ʿal-li ʿala zubad il-ḥikaaya* he gave me the gist of the story.
زبدة *zabada* /n/ civet.
زباد *zabaad* /n/ civet. *ʿuṭṭ' zabaad* civet cat.
زبادى *zabaadi* (also *laban zabaadi*) /n/ yoghurt.
زبديك *zibdiik* /n/ lactic acid.
زبّد *zabbid* **1** /vt/ to churn (milk), cause (milk) to form butter. *ʃil-xaḍḍ' zabbid il-laban* churning made the milk produce butter. **2** /vi/ to yield butter, be changed into butter. *ʃil-laban yizabbid bil-xaḍḍ il-mustamirr* milk yields butter after continuous shaking. - vn *tazbiid*; ava/pva *mizabbid*.
اتزبّد *ʃitzabbid* or *ʃizzabbid* /vi/ to be turned into butter. - iva *mitzabbid*.

ز ب د ي ك see ز ب د : *zibdiik*

ز ب ر
زبر *zubr* /n pl *ʃazbaar, zibaar*/ *[coarse]* penis, cock.

ز ب ر ج د
زبرجد *zabargad* /n/ **1** chrysolite, peridot. **2** aquamarine. **3** topaz.

ز ب ر ق
زبرق *zabraq* /vt/ *[slang]* to adorn, ornament. *zabraqu l-ʿaruusa ʿaʃaan yoom faraḥ-ha* they've dressed the bride up for her wedding-day. - vn *zabraqa*; ava/pva *mizabraq*.
اتزبرق *ʃitzabraq* or *ʃizzabraq* /vi/ *[slang]* to adorn oneself, dress oneself up, be adorned, be dressed up. - vn *tizabriiq*; ava/iva *mitzabraq*.

ز ب ز ب
ذبذبة *zabzaba* /n pl *-aat*/ **1** *[elec]* oscillation, vibration. **2** (radio) frequency. *zabzaba ʿalya* high frequency.
مذبذب *muzabzab* /adj */ **1** wavering, vacillating, undecided. **2** hypocritical.
اتذبذب *ʃitzabzib* or *ʃizzabzib* /vi/ to oscillate, vibrate. - vn *tazabzub*; ava *mitzabzib*.

[1] ز ب ط
زبط *zabaṭ'* /n/ mud, mire.
زبّط *zabbaṭ'* **1** /vt/ to cover with mud or dirt. — /vi/ **2** to be covered with mud or dirt. **3** to become constricted, become entangled, become clogged. *ʃil-xinaaqa zabbaṭit* the quarrel became hopelessly involved. *baṭn-u zabbaṭit* his stomach became bloated. - vn *tazbiiṭ*; ava/pva *mizabbaṭ*.
اتزبّط *ʃitzabbaṭ'* or *ʃizzabbaṭ'* /vi/ to be covered with mud or dirt. - iva *mitzabbaṭ*.

[2] ز ب ط see ظ ب ط : *zabaṭ[2], zabṭ, zaabiṭ, mazbuuṭ, ʃitzabaṭ, zabbaṭ[2], ʃitzabbaṭ[2]*

[3] ز ب ط see ز ب ا ط : *zubaaṭa*

ز ب ع
زوبعة *zawbaʿa'* **1** /n pl *zawaabiʿ*/ large whirlwind, tornado. ‖*zawbaʿa f-fingaan [prov]* a storm in a teacup. - *ʃilli tgiib-u r-riyaaḥ taxd-u z-zawaabiʿ [prov]* ≈ easy

come, easy go. **2** /prop n/ *[astrol]* demon associated with Friday.

ز ب ق

زبق *zabaq (i)* /vi/ to dart (in or out), slip (away), flee. - also *zaraq*. - ava *zaabiq*.

ز ب ل

زبل *zabal (i)* /vt/ *[slang]* to avoid like dirt, treat with contemptuous indifference. - vn *zabl, zabla*; ava *zaabil*; pva *mazbuul*.

زبل *zibl* /coll n/ dropping(s) (of birds, goats, sheep, rabbits, mice etc.).

زبلة *zibla* /unit n, pl *-aat*/ dropping, piece of dung. ‖*zibla wi-yqaawiḥ it-tayyaar* ≈ he's a nobody and he's out to change the world.

زبالة *zibaala* /n/ garbage, rubbish, trash. *ṣafiiḥit zibaala* rubbish bin. *zibaalit il-quṭn* cotton waste.

زبّال *zabbaal* /n */ garbage collector. ‖*zabbaal wi-f-ʃiid-u warda [prov]* a garbage man with a flower in his hand (applied to an incongruous combination).

مزبلة *mazbala* /n pl *mazaabil*/ rubbish dump, trash dump.

اتزبل *ʃitzabal* or *ʃizzabal* /vi/ to be neglected, be avoided like dirt. *min suluuk-u tzabal minnina kull^{i}-na* because of his (bad) behaviour, he's been treated with contempt by us all. - iva *mitzibil, mitzabal*.

زبّل *zabbil* **1** /vt/ to treat (e.g., leather) with droppings. **2** /vi/ to drop excrement, excrete droppings (of birds, sheep, goats, rabbits etc.). - vn *tazbiil*; ava *mizabbil*.

ز ب ل ح

زبلحة *zablaḥa* /n/ *[joc slang]* ill-manners, insolence, rudeness.

مزبلح *muzablaḥ* /adj */ *[joc slang]* ill-mannered, insolent, rude.

اتزبلح *ʃitzablaḥ* or *ʃizzablaḥ* /vi/ *[joc slang]* to be insolent, abusive or rude. *dayman yitzablaḥ ʕala graan-u* he always abuses his neighbours. - ava *mitzablaḥ*.

متزبلح *mutazbliḥ* /adj */ *[joc slang]* insolent, rude, impudent.

ز ب ن [1]

زبان *zabaan* /n/ sting (of a bee, scorpion etc.). ‖*ʃid-dinya waqfa ʕala zaban-ha* ≈ everyone is hopping with excited anticipation. - *bi-yduur ʕala zabaan-u* he's just bumming around.

زبانة *zabaana* /n pl *-aat*/ sprout (of a germinating seed).

زبّن *zabbin* /vi/ to germinate, start growth. *ʃil-ḥilba zabbinit* the fenugreek seeds have germinated. - vn *tazbiin*; ava/pva *mizabbin*.

ز ب ن [2]

زبانية *zabanya, zabaaniya*↑ /pl n/ **1** *[Isl]* *zabanyit gahannam* Angels of Hell. ≈ henchmen. *gaab zabanyit-u mʕaa* he brought his henchmen with him.

ز ب ن [3] see ز ب و ن: *zibuun, zubuun, zabuun*

ز ب و ن

زبون *zibuun, zubuun, zabuun*↓ <P *zubûn*> /n pl *zabaayin*/ **1** (male) customer, client. **2** *[slang]* contemptuous form of reference to a third party. *ʃiz-zibuun mif ʕagb-u k-kalaam da* the creep doesn't go along with that!

ز ت و ن see ز ى ت: *zatuun, ʃiz-zatuun, zatuuna, zatuunaaya, zatuuni*

ز ج ج [1]

زجاج *zugaag*↑ /n/ **1** glass. ‖*ʃalyaaf zugaag* fibreglass. **2** glaze.

زجاجى *zugaagi*↑ /adj/ of or pertaining to glass.

زجّج *zaggig*↑ [1] /vt/ to glaze. - vn *tazgiig*; ava/pva *mizaggig*.

تزجيجات *tazgigaat* /pl n/ glazes.

اتزجّج *ʃitzaggig*↑ [1] or *ʃizzaggig*↑ [1] /vi/ to be glazed. - iva *mitzaggig*.

ز ج ج [2]

زجج *zaggig*[2] /vt/ to pencil (the eyebrows). - vn *tazgiig*; ava/pva *mizaggig*.

اتزجّج *ʃitzaggig*[2] or *ʃizzaggig*[2] /vi/ to be pencilled (of eyebrows). - iva *mitzaggig*.

ز ج ر

زجر *zagar*↑ *(u)* /vt/ to shout at, rebuke loudly. - vn *zagr*; ava *zaagir*; pva *mazguur*.

اتزجر *ʃitzagar* or *ʃizzagar* /vi/ to be restrained, be held back. - iva *mitzigir*.

انزجر *ʃinzagar* = *ʃitzagar*. - iva *minzigir*.

ز ج ز ا ج

زجزاج *zigzaag* <prob Fr> **1** /adj invar/ zigzag. *ʃis-sikka zigzaag* the way is zigzag. - /adverbially/ *maafi zigzaag* going zigzag. **2** /n/ ricrac braid.

ز ج ز ج

زجزج *zagzig* /vi/ to gain weight, fatten up (especially of animals). *ʃil-mawaafi bi-tzagzig ʕal-ʕalaf il-gayyid* cattle gain weight (if fed) on good fodder. - vn *zagzaga*; ava *mizagzig*.

ز ج ل [1]

زجل *zagal* /n pl *ʔazgaal*/ light or popular poem in strophic form (often satirical).

زجلي *zagali* /adj/ pertaining to the *zagal*. *ʔuvniyya zagaliyya* popular strophic poem set to music.

زجّال *zaggaal* /n */ writer of *zagal*.

مزجول *mazguul* /adj/ produced in *zagal* form.

ز ج ل [2]

زاجل *zaagil: ħamaam zaagil* carrier-pigeons.

ز ح ز ح

زحزح *zaħzaħ* /vt/ to move, shift (s.th. heavy). - vn *zaħzaħa*; ava/pva *mizaħzaħ*.

اتزحزح *ʔitzaħzaħ* or *ʔizzaħzaħ* /vi/ to move or be moved (of s.th. heavy). - ava/iva *mitzaħzaħ*.

ز ح ف [1]

زحف *zaħaf[1]* *(a)* (also *saħaf*) /vi/ **1** to crawl, creep. **2** *[text]* to run, spread (of colours). **3** *[mil]* to advance, march forward. - vn *zaħf*; ava *zaaħif*.

زواحف *zawaaħif* /pl n/ reptiles.

زحّافة *zaħħaafa* /n pl *-aat*/ **1** *[agric]* leveller, drag. **2** *[slang]* pair of rubber slippers.

زحّف *zaħħaf* /vt/ **1** to cause to creep or crawl. **2** *[text]* to cause (colours) to run. **3** *[agric]* to smooth, level (with a drag). - vn *tazħiif*; ava *mizaħħaf*.

اتزحّف *ʔitzaħħaf* or *ʔizzaħħaf* /vi/ passive of *zaħħaf*. - iva *mitzaħħaf*.

ز ح ف [2]

زحف *zaħaf[2]* /n/ palm leaves. - also *zaɛaf, saɛaf*.

ز ح ل

زحل *zuħal* /prop n/ Saturn. ‖*ħaẓẓ-u zuħal* his luck is bad. - *nahaar-u zuħal* he's having an unlucky day.

ز ح ل ف

زحلفة *ziħlifa, zuħlifa* /n pl *-aat, zaħaalif*/ tortoise. - also *zilħifa, zulħifa, siħlifa, silħifa, suħlifa, sulħifa*.

ز ح ل ق

زحلق *zaħlaq* /vt/ **1** to cause to slip or skid. *ʔif-fawaariɛ il-mabluula bi-tzaħlaq il-ɛarabiyyaat* wet roads make cars skid. **2** *[slang]* to ease aside. *ʔinta ɛaayiz tizaħlaq-ni zayy' ɛawayd-ak* do you want to ease me away as you usually do? *mizaħlaq iṭ-ṭaqiyya ʔaaxir fiyaaka* he is wearing his cap at a very jaunty angle. - vn *zaħlaqa*; ava/pva *mizaħlaq*.

مزحلق *mizaħlaq* /adj */ slippery.

زحليقة *zuħleeqa* /n pl *-aat, zaħaliiq*/ **1** slide, chute. **2** mire.

اتزحلق *ʔitzaħlaq* or *ʔizzaħlaq* /vi/ **1** to slip, skid. *ʔitzaħlaqt' fil-banyu ṣ-ṣubħ* I slipped in the bath tub this morning. **2** to ski. - ava *mitzaħlaq*.

تزحلق *tazaħluq* /n/ skiing.

ز ح م

زحم *zaħam (i)* /vt/ **1** to crowd, pack, fill up. *ma-tizħimuu-ʃ il-ʔooḍa min faḍl-u-kum* don't crowd the room, please. ‖*leeh tizħim nafs-ak biʃ-ʃakl-i-da* why do you get yourself so busy like that? - *ʔiz-zaħma ɛand in-nabi↓ [joc]* crowding (should only occur) at the (tomb of the) Prophet ≈ don't push and shove! **2** to cause to rush, hustle. *maa lak mazħuum kida leeh* why are you in such a hurry? ‖*baṭn-u zaħmaa* he has diarrhoea. - vn *zaħamaan, zaħma*; ava *zaaħim*; pva *mazħuum*.

زحمة *zaħma* /n/ crowd. *ɛaayiz ʔalħaq iʃ-ʃuɣl' ɋabl' zaħmit il-muwaṣlaat* I want to get to work before the rush-hour crowds. - /adjectivally/ *ʔil-bank' zaħma ɋawi* the bank is very crowded.

أزحم *ʔazħam* /el/ more/most crowded.

زحام *ziħaam = zaħma*.

اتزحم *ʔitzaħam* or *ʔizzaħam* /vi/ to become crowded. *ʔil-ʔooḍa tzaħamit* the room grew crowded. - ava *mitziħim*.

انزحم *ʔinzaħam = ʔitzaħam*. - ava *minziħim*.

زاحم *zaaħim* /vi/ to jostle, elbow one's way. *ʔin-naas illi bi-tzaaħim fig-gamɛiyya* the people who jostle in the co-op. - vn *mizaħma*; ava *mizaaħim*.

مزاحم *muzaaħim↑* /n */ rival.

اتزاحم *ʔitzaaħim* or *ʔizzaaħim* /vi/ **1** to jostle one another, elbow one another. ‖*tazaaħum il-ʔafkaar* the crowding of thoughts (in the mind). **2** = *zaaħim*. - vn *tazaaħum↑*; ava *mitzaaħim*.

ازدحم *ʔizdaħam = ʔitzaħam*. - vn *ʔizdiħaam*; ava *muzdaħim*.

استزحم *ʔistazħam* /vt/ **1** to consider crowded. **2** to select for being crowded. - ava *mistazħam*.

ز ح و ل

زحول *zaħwil* /vt/ to ease off, deflect, dodge. *ʔahamm" ħaaga ɛand il-muwaẓẓaf ʔinnu yzaħwil-ak min ɛalee* the most important thing in the civil servant's mind is to get rid of you. - vn *zaħwala*; ava/pva *mizaħwil*.

اتزحول *ʔitzaħwil* or *ʔizzaħwil* /vi/ to be given the brush-off. - iva *mitzaħwil*.

زخ خ
زخ *zaxx (u)* /vi/ **1** to rain heavily, pour. *ʕid-dinya bi-tzuxx* it is raining hard. - also *saxx*. **2** to urinate. - also *ʃaxx*. - vn *zaxx, zaxaxaan*; ava *zaaxix*.
زخّة *zaxxa* /inst n, pl *-aat*/ **1** a shower of rain. **2** a urinating.

زخ ر see د خ ر : *zaxra, zaxiira*

زخ ر ف
زخرف *zaxraf* /vt/ to decorate, adorn. - vn *zaxrafa*; ava/pva *mizaxraf*.
زخرفة *zaxrafa* /n pl *-aat, zaxaarif*/ decoration. ‖ *zaxaarif id-dunya* pleasures and vanities of the world. *zaxaarif if-ʃiṭaan* temptations of the devil.
زخرف *zuxruf*↑ /n pl *zaxaarif*/ luxury, indulgence, wordly pleasure. *zuxruf il-ḥayaah* the material pleasures of life.
زخرفي *zaxrafi, zuxrufi*↑ /adj/ ornamental. *ʃaʃkaal zaxrafiyya* ornamental patterns.
اتزخرف *ʃitzaxraf* or *ʃizzaxraf* /vi/ **1** to be decorated, be adorned. **2** to adorn oneself. - vn *tizaxriif*; ava/pva *mitzaxraf*.

زخ م [1]
زخم *zaxam (u)* /vt/ **1** to lash, whip. *ʃil-ɣarbagi zaxam il-ḥumaar gaamid* the cart-driver lashed the donkey hard. **2** *[mus]* to pluck (lute strings) with a plectrum. - vn *zaxm*; ava *zaaxim*; pva *mazxuum*.
زخمة *zuxma* /n pl *zuxam*/ **1** leather strap for lashing, tawse. **2** stirrup leather.
اتزخم *ʃitzaxam* or *ʃizzaxam* /vi/ **1** to be lashed, be whipped. **2** *[mus]* to be plucked with a plectrum. - iva *mitzixim*.

زخ م [2]
زخم *zixim* /adj */ **1** rancid or putrid in smell, stinking. *ʃid-dihn il-mixazzin min mudda riḥt-u b-tibqa zixma* fat stored for a long time gives off a rancid smell. **2** unbearable (of people). *qadd[i] ʃeeh ir-raagil da zixim* how repellent that man is!
زخمة *zaxama* /n/ stench, stink. *ʃil-laḥma di fiiha zaxama* this meat stinks. ‖ *ʃir-raagil da ɣalee zaxama* ≈ this man is unbearable. - also *zahama*.
زخامة *zaxaama* = *zaxama*. - also *zahaama*.

زر ب [1]
زريبة *zarbiyya* /n pl *-aat, zaraabi*/ hedge, fence, enclosure.
زريبة *ziriiba* /n pl *zaraayib*/ **1** pen, byre (for livestock). *xud min iz-zaraayib wala taxud-f[i] min il-qaraayib [prov]* better to marry from the animal pen than from among your relatives. — *ʃiz-zaraayib* /pl n/ **2** locality inhabited by garbage collectors and their families, so called after the sties of the pigs which they raise.
زرب *zarrab* /vi/ to make a hedge or fence, build a stick or bamboo enclosure. - vn *tazriib*; ava *mizarrab*.
اتزرّب *ʃitzarrab* or *ʃizzarrab* /vi/ to be erected or built (of an enclosure). - iva *mitzarrab*.

ز ر ب [2]
مزراب *muzraab, mizraab*↑ /n pl *mazariib*/ spout for draining water from roofs and balconies.

ز ر ب ن
زربن *zarbin* **1** /vt/ to get (s.o.) into a temper. **2** /vi/ to get into a temper. - vn *zarbana*; ava/pva *mizarbin*.
زربون *zarbuun* /adj pl *zarabiin*/ **1** excitable, easily infuriated. **2** epithet for a slave.
زربونة *zarbuuna* /n pl *zarabiin*/ fury. *ṭallaɛ zarabiin-u ɣalayya* he really let fly at me.
اتزربن *ʃitzarbin* or *ʃizzarbin* /vi/ to become furious. - vn *tizarbiin*; ava *mitzarbin*.

ز ر ب ي ح
زربيح *zurbeeḥ* /n/ *[bot]* wormseed, Mexican tea (Ambrosinia ambrosioides).

زرج see ز ر ر ي ج : *zurreega*

ز ر ج ن
زرجن *zargin* /vi/ **1** to become stuck, jam. *ʃid-diriksiyoon bi-yzargin lamma f-ʃaḥm[i] yixlaṣ* the steering-wheel jams when the lubricant runs out. **2** to become grumpy. - vn *zargana, tizargiin*; ava *mizargin*.
زرجينة *zargiina* /n pl *zaragiin*/ **1** hand-vice. **2** vice-like implement used for holding hot metal.

ز ر د [1]
زرد *zarad (i, u)* /vt/ **1** to yield (juice, essence etc., as by infusion). *ʃik-karkadeeh zarad loon-u l-ʃaḥmar* the hibiscus flowers gave out their red colour (when infused in water). *ʃiz-zabaadi zarad firf-u* the yoghurt turned partly to whey. ‖ *wiff-i zarad ɣaraq* my face oozed sweat. **2** to cause (the face) to flush. *wiff-a-ha mazruud min il-ḥarr* her face is flushed from the heat. *wiff-u mazruud min iz-zaɣal* his face is purple with anger. — /vi/ **3** to infuse till strong. *xalli f-faay yizrid* let the tea boil (or brew) till it gets strong. - vn *zard, zaradaan*; ava *zaarid*; pva *mazruud*.

زرد *zarad¹ (u)* /vt/ to swallow (with difficulty), gulp. *min kubr il-luqma kaan bi-yizrud-ha ʊɪl-ɣafya* he was eating such big pieces of food that he could hardly gulp them down. - vn *zaradaan, zard*; ava *zaarid*; pva *mazruud*.

زرد *zard* /n/ juice or essence (extracted as by infusion). *zard il-laḥma* the thickened juices and grease of meat.

زردة *zarda* /n/ **1** /pl *-aat*/ instance noun of *zard*. **2** /no pl/ **2a** strong dark tea. **2b** hottest time (of day). *fi-zardit iḍ-ḍuhr* at the peak of the noon heat.

زرديّة *zarradiyya, zaradiyya* /n pl *-aat, zaraadi*/ (pair of) pliers.

اتزرد *ʃitzarad, ʃitzarad¹* or *ʃizzarad, ʃizzarad¹* /vi/ **1** to be extracted (of juice or essence). **2** to become suffused with blood as through choking (of the face). - ava/iva *mitzirid*.

اتزرد *ʃitzarad²* or *ʃizzarad²* /vi/ to be swallowed with difficulty. - iva *mitzirid*.

انزرد *ʃinzarad, ʃinzarad¹* = *ʃitzarad*. - ava/iva *minzirid*.

انزرد *ʃinzarad²* = *ʃitzarad²*. - iva *minzirid*.

زرّد *zarrad, zarrad* /vt/ to choke. - vn *tazriid, tazriid*; ava/pva *mizarrad, mizarrad*.

ازرّد *ʃizradd, ʃizradd* /vi/ to become suffused with blood as through choking (of the face). - ava *mizradd, mizradd*.

زرد²

زرد *zarad²* /coll n/ links (of a fine chain).

زردة *zarada* /unit n, pl *-aat*/ a link (of a fine chain).

زرر¹

زرّ *zarr (u)* /vt/ to close up (s.th.) tightly (especially with a drawstring). *zarrit ɛenee-ha* she narrowed her eyes. - vn *zarr, zararaan*; ava *zaarir*; pva *mazruur*.

زرّ *zirr* /n pl *zuruur*/ **1** tassel on a tarbush. **2** bud. ‖*zirr' ward* /coll/ dried rosebuds. **3** single specimen (of certain elongated fruits and vegetables). *zirr' ɋurunfil* one clove. *zirr' baṭaaṭa* one sweet potato. *zirr' xyaar* one cucumber.

زرار *zuraar* /n pl *zaraayir, ʃazraar*/ **1** button. **2** push-button.

اتزرّ *ʃitzarr* or *ʃizzarr* /vi/ passive of *zarr*. - iva *mitzarr*.

انزرّ *ʃinzarr* = *ʃitzarr*. - iva *minzarr*.

زرّر *zarrar* /vt/ **1** to button, button up. *ma-tzarrar ij-jakitta baɋa* do button up your jacket! **2** *[hort]* to graft (a shoot). - vn *tazriir, tazriir*; ava/pva *mizarrar*.

اتزرّر *ʃitzarrar* or *ʃizzarrar* /vi/ **1** to be buttoned. **2** *[hort]* to be grafted (of a shoot). - iva *mitzarrar*.

ز ر ر²

ذرّة *zarra* /n pl *-aat*/ **1** particle. **2** atom.

ذرّي *zarri, zurri↓* /adj/ atomic. *ɋumbila zarriyya* atomic bomb. *ʁubaar zarri* atomic fall-out.

ذرّيّة *zurriyya, durriyya↓* /n pl *-aat, zaraari*/ progeny, offspring. *ʃil-xunfisa txallif miyya wi-tɋuul ya-ɋillit id-durriyya [prov]* a beetle gives birth to a hundred and complains of scarcity of children ≈ the unworthy breed too much. ‖*zurriyyit ɛafariit* a naughty child.

ز ر ر ي ج

زرّيجة *zurreega* /n/ *[bot]* bird's-foot trefoil (Lotus arabicus).

ز ر ز ر¹

زرزر *zarzar* **1** /vt/ to fill to the brim. *ʃiz-zikiiba mzarzara ɛal-ʃaaxir ḥa-tṭarfaɋ* the sack is stuffed to the utmost - it'll burst. **2** /vi/ to become brim-full, become completely filled. *ɛenee-ha zarzarit bid-dimuuɛ* her eyes filled with tears. - vn *zarzara*; ava/pva *mizarzar*.

زرزورة *zarzuura¹* /n/ quickness of temper. *walad bi-zarzuura* a boy with a bad temper.

اتزرزر *ʃitzarzar* or *ʃizzarzar* /vi/ **1** to be filled to the limit. **2** to lose one's temper. - vn *tizarziir*; ava/iva *mitzarzar*.

ز ر ز ر²

زرزور *zarzuur* /n pl *zaraziir*/ starling.

زرزورة *zarzuura²* = *zarzuur*.

زرط see م ز ر ط

ز ر ع

زرع *zaraɛ (a)* /vt/ **1a** to plant, sow. *ʃilli tizraɛ-u tuḥṣud-u [prov]* what you sow, you reap. *zarɛ' ʃalʁaam* mine-laying. ‖*zaraɛ-u zarɛ' baṣal* he knocked him into the ground head first, he flattened him. *- ḥ-azraɛ nafs-i hina* 'I'll stick around here.' *- ya zarɛ il-badaari [joc]* what a fine specimen! what a fine figure of a man! **1b** to cultivate. **2** *[constr]* to erect (scaffolding). **3** *[text, print]* to apply or fix (powder) through spraying or dusting. **4** to restore the design of (a carpet, by mending it). - vn *zarɛ, ziraaɛa, ziraaɛa*; ava *zaariɛ*; pva *mazruuɛ*.

زرع *zarɛ* /coll n/ crop(s), plant(s), greenery. *zarɛ-u-hum maat* their crops died. *ʃiḥna bi-nḥibb iz-zarɛ' fil-beet* we like to have plants around the house.

زرعة *zarɛa* /n pl *-aat*/ **1** /inst n/ a planting. **2** /unit n/ a crop.

زرعي *zarʕi* /adj/ pertaining to plants or crops. *ʃaxḍar zarʕi* bright green.

زراعة *ziraaʕa, ziraaʕa* /n/ **1** /no pl/ agriculture. *waziir iz-ziraaʕa* the Minister for Agriculture. **2** /pl *-aat*/ (area of) cultivation. *beet-u gaar iz-ziraaʕa* his house adjoins the cultivated area.

زراعي *ziraaʕi* /adj */ agricultural. *maḥaṣiil ziraʕiyya* agricultural products. *muhandis ziraaʕi* agronomist. ‖*ṭariiq ziraaʕi* road passing through an agricultural area. - *ʃil-ʃiṣlaaḥ iz-ziraaʕi* agrarian reform.

زارع *zaariʕ*[1] /n pl *zurraaʕ*↑/ farmer, cultivator.

مزروعات *mazruʕaat*↑ /pl n/ crops, plants.

زرّيع *zarriiʕ* /coll n/ **1** seedling(s). **2** shoot(s), sprout(s). **3** young fish.

زرّيعة *zarriiʕa* = *zarriiʕ*. ‖*dool zarriiʕit ʃabalsa* they are mischievous little monsters.

زرّيعة *zurreeʕa* /unit n, pl *-aat, zarariiʕ*/ **1** a seedling. **2** a sprout, a shoot. **3** a young fish.

مزرعة *mazraʕa, mazraʕa*↑ /n pl *mazaariʕ*/ place where a specific crop is cultivated. *mazraʕit naxiil* a palm plantation. ‖*mazraʕit firaax* a chicken farm.

¶ *ʕamal mazraʕa [path]* to make a culture. *ʃibʕat il-balʏam ʕaʃaan yitʕimil-lu mazraʕa* send the sputum to have a culture made.

اتزرع *ʃitzaraʕ* or *ʃizzaraʕ* /vi/ passive of *zaraʕ*. - iva *mitziriʕ*.

انزرع *ʃinzaraʕ* = *ʃitzaraʕ*. - iva *minziriʕ*.

زرّع *zarraʕ* **1** /vi/ to sprout, germinate (usually of plants). ‖*zarraʕ badri* he grew early, he's tall for his age. **2** /vt/ = *zaraʕ* 4. - vn *tazriiʕ*; ava/pva *mizarraʕ*.

زارع *zaariʕ*[2] /vt/ to enter into a sharecropping arrangement with (s.o.). - vn *mizaraʕa*; ava *mizaariʕ*.

مزارع *muzaariʕ* /n */ farmer, cultivator.

ز ر ف

زراف *zaraaf* /coll n/ giraffe(s).

زرافة *zaraafa* /unit n, pl *-aat*/ a giraffe.

ز ر ق [1]

زرق *zaraq (u)* /vi/ **1** to slip, pass. *ʃil-ḥaraami zaraq min il-buliiṣ fiz-zaḥma* in the crowd the thief slipped away from the police. *ʃil-musmaar zaraq fil-xaʃab* the nail went easily into the wood. ‖*naab-u zaariq* (1) he's vicious and cruel. (2) he's wily and untrickable. **2** to give a piercing sidelong glance. *zaraq bi-ʕeen-u liyya* he threw a quick sharp look at me. - vn *zarq, zaraqaan*; ava *zaariq*.

زوارق *zawaariq* /pl n/ innermost windings, labyrinthine core. *tuht*[i] *f-zawaariq il-baṭniyya* I got lost deep in the winding alleys of el-Batniya.

زاروق *zaruuq* /n pl *zawariiq*/ **1** small irrigation channel supplying a paddy. **2** small snake.

زواريق *zawariiq* = *zawaariq*. ‖*daxal fi-zawariiq il-mudiir* he wormed his way into the director's confidence.

مزراق *muzraaq* /n pl *mazariiq*/ javelin.

زرّق *zarraq*[1] /vt/ **1** to slip, pass covertly. *zarraq-li gneeh* he slipped me a pound. **2** intensive of *zaraq* 2. - vn *tazriiq*; ava *mizarraq*.

اتزرّق *ʃitzarraq*[1] or *ʃizzarraq*[1] /vi/ passive of *zarraq*[1] 1. - iva *mitzarraq*.

ز ر ق [2]

أزرق *ʃazraq* /adj, fem *zarqa*, pl *zurq*/ **1** blue. *ʃazraq ṣiini* china blue. *ʃazraq zayy in-niila* as blue as indigo. ‖*mayya zarqa* cataract (of the eye). - *ʕaḍma zarqa* abusive epithet for a Copt. - *naab-u ʃazraq* he is cunning. - *ḫ-aṭallaʕ il-bala l-ʃazraq ʕala gittit-u* ≈ I'll destroy him! - *ʃil-ʕafariit iz-zurq*[i] *b-titnaṭṭaṭ fi-ʕnee* he is furious. - *ʃinta ḫa-tiftaval-li fil-ʃazraq* ≈ are you trying to play dirty with me? **2a** grey (of a horse). **2b** dove-grey (of a pigeon).

زرقان *zaraqaan* /n/ blueness.

زراق *zaraaq* = *zaraqaan*.

زروقيّة *zuruqiyya* = *zaraqaan*.

زرّق *zarraq*[2] /vt/ to cause to become blue, make blue. ‖*zarraq-li ʕeen-i* he gave me a black eye. - vn *tazriiq*; ava *mizarraq*.

اتزرّق *ʃitzarraq*[2] or *ʃizzarraq*[2] /vi/ to be made blue. - iva *mitzarraq*.

ازرقّ *ʃizraqq* /vi/ to become blue. *wiff-u zraqq*[i] *w-ʃuvma ʕalee* his face turned blue and he fainted. ‖*ʕeen-u mizriqqa* he has a black eye. - ava *mizriqq*.

استزرق *ʃistazraq* /vt/ to consider blue. - ava *mistazraq*.

ز ر ك ش

زركش *zarkiʃ*↑ <P *zar-kash*> /vt/ to embroider, decorate. - vn *zarkaʃa*; ava/pva *mizarkiʃ*.

اتزركش *ʃitzarkiʃ* or *ʃizzarkiʃ* /vi/ to be embroidered, be brocaded, be decorated. - iva *mitzarkiʃ*.

ز ر ك و ل

زركولة *zirkoola*: *tikk*[i] *zirkoola* see *tikk*[1].

ز ر ن ي خ

زرنيخ *zarniix* <P *zirnîkh*, cf also Syr> /n/ arsenic.

ز ر و ط

زروط *zarwaṭ [slang]* **1** /vt/ to soil, make a mess of. **2** /vi/ to become plentiful. *ʃil-baṭṭiix zarwaṭ* melons have be-

come plentiful. - vn *zarwaṭa*; ava/pva *mizarwaṭ*.
اتزروط *ʔitzarwaṭ* or *ʔizzarwaṭ* /vi/ to be soiled, be messed up. - iva *mitzarwaṭ*.

ز ع ب ب
زعبوبة *zaʕbuuba* /n pl *zaʕabiib*/ dust devil, whirlwind.
زعبب *zaʕbib* /vi/ to become dusty and windy (of the weather). - vn *zaʕbaba*; ava *mizaʕbib*.
مزعبب *mɪzaʕbib* /adj */ excited and irritable.

ز ع ب ل
زعبل *zaʕbal: ʔabu zaʕbal* /prop n/ town in the Qalyubiya province known for its prison.

ز ع ب و ط
زعبوط *zaʕbuuṭ* /n pl *zaʕabiiṭ*/ long woollen robe often with a hood (worn by peasants).

ز ع ت ر
زعتر *zaʕtar, zaʕtar* /n/ thyme. - also *saʕtar*.

ز ع ج
زعج *zaʕag (i)* =ʔazʕag. - ava *zaaʕig*; pva *mazʕuug*.
انزعج *ʔinzaʕag* /vi/ to be annoyed, be disturbed. - vn *ʔinziʕaag*; iva *munzaʕig* ↑*minziʕig*.
أزعج *ʔazʕag* ↑/vt/ to annoy, disturb. *ʔin ʃaaʔ allaah ma-nkun-f' ʔazʕagnaa-k* I hope we haven't disturbed you. - vn *ʔizʕaag*; ava *muzʕig*.

ز ع ر [1]
زعر *zaʕar[1] (a)* /vt/ to cut off short, dock (clothes or animals' tails). *leeh zaʕarti l-fustaan kida* why have you made the dress so short? - vn *zaʕr*; ava *zaaʕir*; pva *mazʕuur*.
أزعر *ʔazʕar[1]* /adj, fem *zaʕra*, pl *zuʕr*/ docktailed. *kalb[a] ʔazʕar* a dog with a docked tail. *karabiig zuʕr* short whips without lashes. ‖*karabiig-u zuʕr* he is very cruel. - *(kull-u) quṣr' deel (ya ʔazʕar) [prov]* ≈ sour grapes!
اتزعر *ʔitzaʕar* or *ʔizzaʕar* /vi/ to be cut off short, be docked. - iva *mitziʕir*.
أزعر *ʔazʕar[2]* /vt/ to shorten too much. *ʔazʕarti ʃaʕr-ik leeh kida* why have you clipped off too much of your hair like this? - vn *ʔazʕara*; ava/pva *miʔazʕar*.
اتأزعر *ʔitʔazʕar* /vi/ to be shortened too much. - iva *mitʔazʕar*.

ز ع ر [2]
ذعر *zaʕar[2] (i)* /vt/ to frighten, terrify, alarm. - vn *zuʕr*↑; ava *zaaʕir*; pva *mazʕuur*.
ذعر *zuʕr* ↑/n/ panic, terror. *gat-lu ḥaalit zuʕr* he panicked.
انذعر *ʔinzaʕar* /vi/ to be frightened, be alarmed, be panic-stricken. - vn *ʔinziʕaar*; ava *minziʕir*.

ز ع ز ع
زعزع *zaʕzaʕ* /vt/ to shake, undermine (confidence etc.). *zaʕzaʕit sɪqat-i f-nafs-i* it shook my self-confidence. - vn *zaʕzaʕa*; ava/pva *mɪzaʕzaʕ*.
مزعزع *mizaʕzaʕ* /adj */ long and thin, tall and skinny.
زعزوع *zaʕzuuʕ* /adj/ long and thin, tall and skinny.
زعزوعة *zaʕzuuʕa* /n pl *zaʕaziiʕ*/ top part or spike of a sugar cane. ‖*zayy iz-zaʕzuuʕa* long and thin, tall and skinny.
اتزعزع *ʔitzaʕzaʕ* or *ʔizzaʕzaʕ* /vi/ to be shaken or undermined (of confidence etc.). - vn *tizaʕziiʕ*; iva *mitzaʕzaʕ*.

ز ع ط [1]
زعط *zaʕaṭ (a)* /vt/ to pluck out (hair). *zaʕaṭit ḥawagɪb-ha bil-mulqaaṭ* she plucked her eyebrows with the tweezers. - vn *zaʕṭ*; ava *zaaʕiṭ*; pva *mazʕuuṭ*.
اتزعط *ʔitzaʕaṭ* or *ʔizzaʕaṭ* /vi/ to be plucked out. - iva *mitziʕiṭ*.
انزعط *ʔinzaʕaṭ* =ʔitzaʕaṭ. - iva *minziʕɪṭ*.

ز ع ط [2] see ز ع ى ط : *ziʕeeṭ*

ز ع ع
زعّ *zaʕʕ (i)* /vt/ **1** to treat cruelly, treat harshly. *ruḥt aʕtizir-lu zaʕʕ-i-ni* I tried to apologize but he rejected me roughly. **2** to unsettle, upset (s.o.). - vn *zaʕʕ, zaʕaʕaan*; ava *zaaʕiʕ*; pva *mazʕuuʕ*.
اتزعّ *ʔitzaʕʕ* or *ʔizzaʕʕ* /vi/ **1** to be treated harshly. **2** to be unsettled, be upset. - iva *mitzaʕʕ*.

ز ع ف
زعف *zaʕaf* /coll n/ palm frond(s). *ḥadd iz-zaʕaf [Chr]* Palm Sunday. - also *zaḥaf, saʕaf*.
زعّافه *zaʕʕaafa* /n pl *-aat*/ long-handled ceiling duster (with a head of palm or other fibre).
زعّف *zaʕʕaf* /vi/ to dust a ceiling with a *zaʕʕaafa*. - vn *tazʕiif*; ava *mizaʕʕaf*.
اتزعّف *ʔitzaʕʕaf* or *ʔizzaʕʕaf* /vi/ to be dusted (with a *zaʕʕaafa*). - iva *mitzaʕʕaf*.

(ز ع ف ر)
زعفر *zaʕfar, zaʕfar* /n/ sapphire.
زعفران *zaʕfaraan, zaʕfaraan* /n/ saffron.

ز ع ق

زعق *zaʕaq (a)* /vì/ **1** to call out, shout. *lamma b-tismaʕ bayyaaʕ bi-ynaadi b-tiʒʕaq ʕalee* when she hears a street vendor cry, she calls out to him. *marraat lamma bi-ygii-ni d-door ʃabqa ʃazʕaq ʕala ʃwayyit hawa* sometimes when I have an attack (of asthma) I clamour for a little air. **2** *[slang]* to stink to high heaven. - vn *ziʕiiq, zaʕaqaan*; ava *zaaʕiq*.

زعيق *ziʕiiq* /n/ clamour, shouting. *kaanit iṣ-ṣaala kull-a-ha zʕiiq fi-zʕiiq* the hall was all clamour and shouting.

زاعق *zaaʕiq* /adj/ **1** garish (of colour). **2** tart, sour (in taste). **3** *[slang]* putrid.

زعقة *zaʕqa* /inst n, pl *-aat*/ a shout, a cry.

زعّق *zaʕʕaq* /vi/ **1** to shout, bellow, yell. *huwwa bi-yzaʕʕaq fiyya kiḍa leeh* why does he sound off at me like that? **2** to scold, reprimand. *zaʕʕaqt-i-lha lamma gat waxri* I gave her a dressing-down when she came late. - vn *tazʕiiq*; ava *mizaʕʕaq*.

اتزعّق *ʃitzaʕʕaq* or *ʃizzaʕʕaq* /vi/ (impersonal) passive of *zaʕʕaq*. *miʃ ana lli yitzaʕʕaq-lu* I am not (the sort) to be shouted at like that. - iva *mitzaʕʕaq*.

ز ع ل

زعل *ziʕil (a)* /vi/ **1** to become cross, become irritated. *ʃana zaʕlaan minnu ʕala l-maqlab illi ʕamal-u fiyya* I'm angry with him because of the trick he played on me. **2** to become distressed. *ʃumm-a-ha zaʕlaana ʕala fraq-ha* her mother is upset at being separated from her. - vn *zaʕal*; ava *zaʕlaan*.

زعل *zaʕal* /n/ **1** anger, annoyance. *ma-f-naa-ʃ miz-zaʕal* it is inconceivable that we should get angry with each other. *ʃif-ʃukuk mamnuuʕ wiz-zaʕal marfuuʕ* ≈ no credit sales. **2** distress, sadness. *ḥa-tmuut min iz-zaʕal* she will die of grief.

زعلان *zaʕlaan* /adj */ **1** annoyed, cross, angry. *ʃana zaʕlaan minnak* I am cross with you. **2** distressed, sad. *hiyya zaʕlaana ʕalee* she is sorry for him.

زعول *zaʕuul* /adj invar/ *[rur]* recalcitrant, unruly (of an animal and, jocularly, of a woman).

زعلة *zaʕla* /n/ **1** a fit of anger. ‖*ʕamal-ha b-zaʕla wala ʕad-ʃ[i] bi-ykallim-ni* he used the incident as a pretext for not speaking to me any more. **2** a distress, a sadness. *ziʕil zaʕla maat fiiha* he died of his grief.

زعّل *zaʕʕal* /vt/ **1** to upset, annoy, anger. *ma-yṣaḥḥ[i]-ʃ ʃinnu yzaʕʕal ʃahl-u* he should not upset his family. **2** to distress, grieve. - vn *tazʕiil*; ava/pva *mizaʕʕal*.

ز ع ل ك see ص ع ل ك : *zaʕluuk*

ز ع م

زعم *zaʕam (u)* /vt/ to claim, allege. *zaʕamit ʃinn il-beet milk-a-ha* she claimed that the house was hers. - vn *zaʕm*; ava *zaaʕim*; pva *mazʕuum*.

زعم *zaʕm↑* /n/ allegation, claim. *da ṣaḥiiḥ ʕala zaʕm-u-hum* this is true according to their allegation. ‖*ʕala zaʕm inn* ... on the assumption that, as in *ʃana ṭabaxt il-ʃakl[i] da kull-u ʕala zaʕm inn il-ʕeela gayya* I cooked all this food thinking that the family was coming.

مزاعم *mazaaʕim↑* /pl n/ assumptions, allegations. *mazaaʕim baṭla* false beliefs.

زعامة *zaʕaama↑* /n pl *-aat*/ leadership.

زعامات *zaʕamaat* /pl n/ leaders.

زعيم *zaʕiim* /n pl *zuʕama*/ leader.

اتزعّم *ʃitzaʕʕam* or *ʃizzaʕʕam* /vt/ to become the leader of. *ʃitzaʕʕam is-sawra* he became leader of the revolution. - vn *tazaʕʕum↑*; ava *mutazaʕʕim↑, mitzaʕʕim, mitzaʕʕam*.

ز ع ن

ذعن *zaʕan↑ (i)* /vi/ to submit, give in, yield.

أذعن *ʃazʕan↑* = *zaʕan*. - vn *ʃizʕaan*; ava *muzʕin*.

إذعان *ʃizʕaan↑* /n/ submissiveness.

ز ع ن ف

زعنفة *ziʕnifa* /n pl *zaʕaanif*/ **1** fin. **2** (rubber) flipper.

ز ع ن و ن

زعنونة *zaʕnuuna* /n pl *zaʕaniin*/ **1** large decorated pot in which a flower pot is placed, cachepot. **2** goatee beard.

ز ع ى ط

زعيط *ziʕeeṭ: ziʕeeṭ wi-mʕeeṭ wi-naṭṭaaṭ il-ḥeeṭ* every Tom, Dick and Harry.

ز غ ب

زغب *zaʏab* /n/ down, fuzz.

زغبى *zaʏabi* /adj/ downy, fuzzy.

زغّب *zaʏʏab* /vi/ to become downy, become fuzzy. - vn *taʒʏiib*; ava *miʒaʏʏab*.

ز غ ب ر

زغبار *zuʏbaar* /n/ dust produced in the processing of cotton etc.

ز غ د

زغد *zaʏad (u)* /vt/ to poke, prod, elbow. ‖*ʃiskut ya maʒʏuud* quiet, you devil! - vn *zaʏd*; ava *zaaʏid*; pva *maʒʏuud*.

زغدة *zaɣda* /inst n, pl *-aat*/ a poke, a prod, a dig.
زغد *zuɣd* /n pl *ʃizɣaad, ʃazɣaad*/ poke, prod, dig with the elbow or leg.
اتزغد *ʃitzaɣad* or *ʃizzaɣad* /vi/ to be poked, be prodded. - iva *mitziɣid*.
انزغد *ʃinzaɣad* = *ʃitzaɣad*. ‖ *ʃin ʃa-lla tinziɣid fi-ʔalb-ak* ≈ may a calamity befall you!
زغّد *zaɣɣad* /vt/ to prod or poke repeatedly. - vn *tazɣiid*; ava *mizaɣɣad*.

ز غ ر [1]
زغر *zaɣar (u)* /vi/ to glare, glower. *zaɣarit-li zaɣra xallit-ni f-nuṣṣ' hduum-i* she gave me a glare which shrivelled me up. - vn *zaɣr*; ava *zaaɣir*.
زغرة *zaɣra* /inst n, pl *-aat*/ a glare, a glowering stare.

ز غ ر [2] see ص غ ر : *zuɣayyar*

ز غ ر ت
زغرت *zaɣrat* /vi/ to produce the trilling sound known as *zaɣruuta*. - vn *zaɣrata*; ava *mizaɣrat*.
زغروتة *zaɣruuta* /n pl *zaɣariit, zaɣrutaat*/ a high trilling cry, commonly uttered by women on joyous occasions.

ز غ ز غ
زغزغ *zaɣzaɣ* /vt/ to tickle. *bi-tzaɣzaɣ il-ʕayyil li-ḥadd' ma ykarkaʕ mid-diḥk* she tickles the baby until he bursts out laughing. - vn *zaɣzaɣa*; ava *mizaɣzaɣ*.
اتزغزغ *ʃitzaɣzaɣ* or *ʃizzaɣzaɣ* /vi/ to be tickled. - vn *tizaɣziiɣ*; iva *mitzaɣzaɣ*.

ز غ ط
زغط *zaɣaṭ (u)* /vt/ to gulp down. - vn *zaɣṭ*; ava *zaaɣiṭ*; pva *mazɣuuṭ*.
زغطة *zuɣuṭṭa* /n/ **1** /no pl/ hiccups, hiccuping. **2** /pl *-aat*/ (one) hiccup.
اتزغط *ʃitzaɣaṭ* or *ʃizzaɣaṭ* /vi/ to be gulped down. - iva *mitziɣiṭ*.
زغّط *zaɣɣaṭ* /vt/ to feed with repeated small quantities. *bi-tzaɣɣaṭ il-baṭṭ' ʕalaʃaan yisman* she force-feeds the ducks so that they will fatten up. *zaɣɣaṭnaa-lu l-ʕilm* we spoon-fed him knowledge. - vn *tazɣiiṭ*; ava/pva *mizaɣɣaṭ*.
اتزغّط *ʃitzaɣɣaṭ* or *ʃizzaɣɣaṭ* /vi/ passive of *zaɣɣaṭ*. - iva *mitzaɣɣaṭ*.

ز غ ط ط [1]
زغطط *zaɣṭaṭ* /vi/ to become overjoyed. - also *zaqṭaṭ*. - vn *zaɣṭaṭa*; ava *mizaɣṭaṭ*.

ز غ ط ط [2] see ص غ ر : *zuɣaṭṭaṭ, zuɣaṭṭuuṭ*

ز غ ل
زغل *zaɣal' (i)* **1** /vt/ to cheat, deceive. *zaɣalit-ni b-maẓhar-ha l-xaddaaʕ* she took me in with her deceptive appearance. **2** to poison (food). **3** to dazzle, blur (the vision). — /vi/ **4** to become dazzled or blurred in vision (of the eye). *ʕenay-ya zaɣalit ma-lḥiqt'-ʃ ʃaqraa-ha* my eyesight became blurred and I didn't manage to read it. - vn *zaɣl, zaɣalaan*; ava *zaaɣil*; pva *mazɣuul*.
زغل *zaɣal²* /n/ deceit, deception.
مزغل *mazɣal* /n pl *mazaaɣil*/ loophole, embrasure.
اتزغل *ʃitzaɣal* or *ʃizzaɣal* /vi/ passive of *zaɣal'*. - iva *mitziɣil, mitzaɣal*.
انزغل *ʃinzaɣal* = *ʃitzaɣal*. - iva *minziɣil*.

ز غ ل ل [1]
زغلل *zaɣlil* **1** /vt/ to blur, render dim, dazzle (the eye). *ʃin-nuur zaɣlil ʕenee-na* the light dazzled our eyes. **2** /vi/ to become dim or blurred, be dazzled. *ʕenee zaɣlilit min kutr in-nimar* his vision became blurred from looking at so many numbers. - vn *zaɣlala*; ava/pva *mizaɣlil*.

ز غ ل ل [2]
زغلول *zaɣluul'* /n pl *zaɣaliil*/ **1** young bird, squab. **2** young or immature person. *ʃiʃ-ʃuɣlaana di ʕayza raagil gaamid wi-da lissa zaɣluul* this job needs a strong man, but this fellow is still wet behind the ears. — *zaɣaliil* /pl n/ **3** *[slang]* lovely young girls, smashing birds.

ز غ ل و ل
زغلول *zaɣluul²: balaḥ zaɣluul* type of long red date.

ز غ ن ط ط see ص غ ر : *zuɣanṭaṭ, zuɣanṭuuṭ*

ز غ ن ن ن see ص غ ر : *zuɣannan, zuɣannuun*

ز غ و ر
زغور *zaɣwar* /vi/ to make noises, rumble (of the stomach). *baṭn-i b-titnifix wi-bi-tzaɣwar lamma b-aakul ʕads* my stomach swells and rumbles when I eat lentils. - vn *zaɣwara, tizaɣwiir*; ava *mizaɣwar*.

ز غ و ن
زغون *zaɣwin* /vi/ to make noises, rumble (of the stomach). - vn *zaɣwana, tizaɣwiin*; ava *mizaɣwin*.

ز غ ي ي ر see ص غ ر : *zuɣayyar*

ز ف ت [1]
زفت *zift* /n/ pitch, tar. ‖ *zayy iz-zift* awful, lousy. - *raagil*

zift iṭ-ṭiin a bloody bastard. -*nawil-ni zift*^{i} *musmaar* hand me a blasted nail. -/adjectivally/ *ḫadd*^{i} *yiqdar yizaakir fil-gaww iz-zift*^{i} *da* can anyone study in this awful weather?

أزفت *ʔazfat* /el/ more/most awful.

زفّت *zaffit* /vt/ **1** to tar, apply tar to. **2** to spoil, ruin, make a mess of. *zaffitit ɛiṭ-i* she made a mess of my life. *zaffit sumɛit-i* he blackened my reputation. — /vi/ **3** to be covered with pitch, become as dirty as pitch. *qamiiṣ-i zaffit fig-gaww il-mixabbar* my shirt has become filthy because of the dusty weather. **4** to become spoilt, become bad or worse. *yoom mizaffit* a lousy day. -vn *tazfiit*; ava/pva *mizaffit*.

اتزفّت *ʔitzaffit* or *ʔizzaffit* /vi/ passive of *zaffit*. -iva *mitzaffit*.

ز ف ت [2] see ز ف ى ت: *zifeeta*

ز ف ت ا

زفتى *zifta* /prop n/ Zifta, a *markaz* on the left bank of the Damietta branch of the Nile in Gharbiya province.

زفتاوى *ziftaawi* /adj pl -*yya*/ of or pertaining to Zifta.

ز ف ر [1]

زفر *zifir* /adj */ **1** greasy, filthy. *damm-u zifir* (1) his blood is dirty (a popular explanation of illness). (2) he's a bore, he's a drag. *lisaan-u zifir* he's foul-mouthed, he's given to insult. ‖*yomiyya zifra* single-entry day book. -*ḫibr*^{i} *zifir* finger-printing ink, printing ink. -*karbuun zifir* double-sided carbon paper. **2** rank or unpleasant (of smell or taste). ‖*yasmiin zifir* common jasmine.

زفر *zafar* /coll n/ meat or poultry.

زفارة *zafaara* /n/ **1** greasy dirt. ‖*zafaara fid-damm* syphilis (in folk medicine). **2** unpleasantly pungent taste or smell (exuded by fish or poultry).

زفّر *zaffar* /vt/ **1** to soil, dirty. *zaffarit ʔid-ha b-damm-u* she soiled her hand with its blood. **2** *[Chr]* to eat (meat or poultry, thus breaking a fast). — /vi/ **3** to eat meat, fish or poultry. *ʔiḥna mzaffariin in-nahar-da* we're having meat (or fish or poultry) today. -vn *tazfiir*; ava/pva *mizaffar*.

اتزفّر *ʔitzaffar* or *ʔizzaffar* /vi/ passive of *zaffar*. -iva *mitzaffar*.

استزفر *ʔistazfar* /vt/ to consider rank or unpleasant-smelling. -ava *mistazfar*.

ز ف ر [2]

زفرة *zafra* /n pl -*aat*/ sigh, moan.

زفير *zafiir* /n/ exhalation, expiration.

ز ف ر [3] see ز ف ى ر: *zifeer, zufeer*

ز ف ف

زفّ *zaff (i)* /vt/ to parade, conduct a ceremonial procession (notably in weddings). *ʔig-giraan kull-a-ha zaffit il-ɛaruusa* all the neighbours led the bride in a procession. *misku l-ḥaraami w-zaffuu lil-qism* they caught the thief and conducted him to the police station. -vn *zafafaan*; ava *zaafif*; pva *mazfuuf*.

زفّة *zaffa* /n pl *zifaf, zaffaat*/ ceremonial procession (notably in weddings). ‖*zaffit ʔamʃiir* the last day of the Coptic month of Tuba. -*huwwa b-yimʃi fiz-zaffa* he goes along with the crowd. -*yiqrab fi-zaffa wi-yṣaaliḥ fi-ɛatfa [prov]* he quarrels in public and makes up in secret.

زفاف *zifaaf, zafaaf* /n/ wedding.

اتزفّ *ʔitzaff* or *ʔizzaff* /vi/ to be paraded, be escorted in procession. -iva *mitzaff*.

انزفّ *ʔinzaff* = *ʔitzaff*. -iva *minzaff*.

ز ف ل ط

زفلط *zaflaṭ* /vt/ **1** to cause to slip. **2** to make slippery. *ʔin-naṭara zaflaṭit iʃ-ʃawaariɛ* the rain made the streets slippery. -vn *zaflaṭa*; ava/pva *mizaflaṭ*.

مزفلط *mizaflaṭ* /adj */ slippery, smooth (in character).

زفلوط *zafluuṭ* **1** /adj */ slippery, smooth (in character). **2** /n pl *zafaliiṭ/ [rur]* catfish.

اتزفلط *ʔitzaflaṭ* or *ʔizzaflaṭ* /vi/ to slide, slip. *ga yimsik samaka ʔitzaflaṭit min ʔiid-u* he tried to catch a fish but it slipped through his fingers . -vn *tizafliiṭ*; ava *mitzaflaṭ*.

ز ف ى ت

زفيتا *zifeeta* /n/ *[bot]* yellow oleander (Theretia hereifolia).

ز ف ى ر

زفير *zifeer, zufeer* <Fr *zéphire*> kind of cheap thick cotton cloth from which galabiyas, pyjamas etc. are made.

ز ق د

زقّد *zaqqad* /vt/ to force-feed (a child). -vn *tazqiid*; ava/pva *mizaqqad*.

اتزقّد *ʔitzaqqad* or *ʔizzaqqad* /vi/ to be force-fed. -iva *mitzaqqad*.

ز ق ر

زقر *zaqar (u)* /vt/ to put or push into a corner. *zaqar-u f-ṛukn il-ḥalaqa w-xallaṣ ɛalee* he pushed him into the

corner of the ring and finished him off. - vn *zaqr*; ava *zaaqir*; pva *mazquur*.

زقر *zuqr* /n/ corner (of a room).

اتزقر *ʔitzaqar* or *ʔizzaqar* /vi/ **1** to be put, pressed or pushed into a corner. **2** to get into trouble, be trapped. - ava/iva *mitziqir*.

انزقر *ʔinzaqar* = *ʔitzaqar*. - ava/iva *minziqir*.

ز ق ر د

زقرد *zuqrud*↓ epithet used to impute worthlessness and smallness to one so called. *ya zuqrud* you good-for-nothing pip-squeak! *ʔitlamm' zuqrud ʕala ẓariifa [prov]* Zuqrud joined up with Zarifa (of the association of two good-for-nothings). - also *zaqzuuq*.

مزقرد *mizaqrad*↓ /adj */ bright and energetic, on-the-ball.

ز ق ز ق

زقزق *zaqzaq* /vi/ to chirp, twitter. *ʔil-ʕaṣafiir bi-tzaqzaq min ṣabaḥiyyit rabb-i-na* birds twitter from the early morning. ‖*ʕaṣafiir baṭn-i zaqzaqit* I was ravenous. - *ʔana ʕaql-i zaqzaq-li* ≈ a sudden idea came to my mind. - vn *zaqzaqa, tizaqziiq*; ava *mizaqzaq*.

مزقزق *mizaqzaq* /adj */ out of sorts, off-key. *mazaag-i mzaqzaq* I'm out of humour.

زقزوق *zaqzuuq* **1** /n pl *zaqaziiq*/ type of small Nile fish that makes a twittering sound when pulled out of water. **2** /no pl/: *zaqzuuq wi-ẓariifa* an association of two equally worthless characters. - also *zuqrud*.

زقزوقة *zaqzuuqa* /n pl *zaqaziiq*/ shred of an exploded balloon, blown and popped.

الزقازيق *ʔiz-zaqaziiq* /prop n/ Zagazig, the capital of Sharqiya province.

[1] ز ق ط ط

زقطط *zaqṭaṭ* /vi/ to become elated, thrilled or overjoyed. - also *zaṛṭaṭ*. - vn *zaqṭaṭa*; ava *mizaqṭaṭ*.

[2] ز ق ط ط see ص غ ر : *zuqaṭṭaṭ, zuqaṭṭuuṭ*

ز ق ف

زقف *zaqaf (u)* /vt/ **1** to throw (a stone, a ball etc.). *ʔizquf ik-koora w-ʔana ʔalquf-ha* throw the ball at me and I'll catch it. **2** to pelt. *zaqafuu-ni b-ṭuub* they threw stones at me. - also *ʃaqaf*. - vn *zaqf, zaqafaan*; ava *zaaqif*; pva *mazquuf*.

[1] ز ق ق

زق *zaqq (u)* /vt/ **1** to push. *zuqq il-baab lin-naḥya t-tanya* push the door the other way. ‖*ma-tzuqq'-ʃ* don't be so snappish! - *zuqq" ʕagal-ak* push off! **2** to incite. *zaqquu-ha ʕalayya ʕaʃaan yiḍayyaʕuu-ni* they incited her against me to ruin my life. — /vi/ **3** *[slang]* to push off, get going. *ḥ-azuqq' baqa* I'll be going then. *nizuqq" ʕas-suuq* let's push off to the market. - vn *zaqq, zaqaqaan*; ava *zaaqiq*; pva *mazquuq*.

زقّة *zaqqa* /inst n, pl *-aat*/ **1** a push. *ʔil-ʕarabiyya kaanit ʕayza zaqqa ʕaʃaan il-mutoor yiftaʁal* the car needed a push to get the engine going. **2** an incitement. *kaanit zaqqa muʁriḍa sabbibit kull illi ḥaṣal* it was a biased incitement that caused all that happened.

اتزقّ *ʔitzaqq* or *ʔizzaqq* /vi/ passive of *zaqq*. - iva *mitzaqq*.

انزقّ *ʔinzaqq* = *ʔitzaqq*. - iva *minzaqq*.

زقّق *zaqqaq* /vt/ **1** to involve (s.o. or o.s.) by force or without invitation. *balaaʃ tizaqqaq nafs-ak fi-lli yxuṣṣ' ʁeer-ak* don't interfere in other people's business! **2** to force-feed (pigeons). - vn *tazqiiq*; ava *mizaqqaq*.

اتزقّق *ʔitzaqqaq* or *ʔizzaqqaq* **1** /vi/ to intrude, interfere without invitation. *dayman yizzaqqaq fi-xṣuṣiyyaat in-naas* he always intrudes upon people's private affairs. **2** to be force-fed (of pigeons). - ava/iva *mitzaqqaq*.

[2] ز ق ق

زقاق *zuqaaq* /n pl *-aat*/ dead-end alley or lane, cul-de-sac.

ز ق ل

زقل *zaqal (u)* /vt/ to throw (away), cast, hurl, fling. *zaqal il-ḥagar biʕiid* he hurled the stone away. - vn *zaql*; ava *zaaqil*; pva *mazquul*.

زقلة *zuqla* /n pl *-aat, zuqal*/ cudgel.

اتزقل *ʔitzaqal* or *ʔizzaqal* /vi/ to be thrown, be hurled, be flung. - iva *mitziqil*.

انزقل *ʔinzaqal* = *ʔitzaqal*. - iva *minziqil*.

زقّل *zaqqal* /vt/ to throw or fling several times. ‖*da bi-yzaqqal* he is mad, he is out of his mind. - vn *tazqiil*; ava/pva *mizaqqal*.

اتزقّل *ʔitzaqqal* or *ʔizzaqqal* /vi/ to be thrown or flung several times. - iva *mitzaqqal*.

ز ق ل ط

زقلط *zaqlaṭ* **1** /vt/ **1a** to form (s.th.) into a lump or bundle. **1b** to cause to become healthy and chubby. **2** /vi/ **2a** to become lumpy. **2b** to become healthy and chubby. - vn *zaqlaṭa*; ava/pva *mizaqlaṭ*.

زقلوطة *zaqluuṭa* /n pl *zaqaliiṭ*/ lump.

زقليط *zuqleeṭa* = *zaqluuṭa*.

اتزقلط *ʔitzaqlaṭ* or *ʔizzaqlaṭ* /vi/ **1** to be formed into a

lump or bundle. **2** to be made healthy and chubby. - vn *tizaqliiʃ*; iva *mitzaqlaṭ*.

ز ق م

زقّم *zaqqam* /vt/ to force-feed (especially ducks or geese) in order to fatten up. - vn *tazqiim*; ava/pva *mizaqqam*.

اتزقّم *ʃitzaqqam* or *ʃizzaqqam* /vi/ to be force-fed (of a duck or goose). - iva *mitzaqqam*.

ز ق ن ط ط see ص غ ر : *zuqanṭaṭ, zuqanṭuup*

ز ك ا see ز ك ي ¹ : *zika, zakaah*

ز ك ء see ز ك ي ² : *zakaaʃ*

ز ك ب see ز ك ي ب : *zikiiba*

ز ك ت ت see ج ك ت ت : *zakitta*

ز ك ر ¹

ذكر *zakar² (u)* /vt/ **1**↑ to mention. *zakar ʃasamii-hum fil-galsa* he mentioned their names in the session. *di ma-lhaa-ʃ zikr* this isn't worth mentioning. - /the literary passive imperfect also occurs/ *ḫaaga la tuzkar* something negligible. *taqaddum yuzkar* noteworthy progress. **2** to remember, keep in mind, think of (s.o. or s.th.) again and again. *ʃil-ɛaaqil laazim yuzkur il-moot dayman* a wise man should always remember that one day he will face death. *ʃana m-azkur-ʃ il-ḫikaaya di* I don't remember that matter. — /vi/ **3** to participate in a dhikr. - vn *zikr*; ava *zaakir*; pva *mazkuur*.

ذكر *zikr* /n pl *ʃazkaar*/ **1** remembrance, mention, recollection. ‖*ɛala zikr* ... speaking of ..., as in *ɛala zikr il-ʃagaaza ḫa-tsaafir ʃimta* while on the subject of the vacation, when are you going away? - *xaalid* (or *ɛaaṭir* or *ṭayyib*) *iz-zikr* ≈ of blessed memory (reference to one deceased). **2** *[Isl]* dhikr, Sufi ritual based on the repeated mention of the name and epithets of God. **3** *ʃiz-zikr* (also *ʃiz-zikr il-ḫakiim*) *[Isl]* the Koran.

ذاكرة *zakra, zaakira*↑ /n/ memory, power of memory. *ɛandu qiwwit zakra* he has a good memory.

مذكور *mazkuur* /n */ *[leg]* one mentioned. *ʃil-mazkuriin ʃaɛlaa* the above-mentioned (ones). ‖ *ʃil-mazkuur* derisive reference to one not present ≈ you-know-who.

ذكرى *zikra* /n pl *zikrayaat*/ memory, reminiscence. *zikra sanawiyya* an annual remembrance.

ذكريات *zikrayaat* /pl n/ memoirs.

ذكّير *zakkiir* /n pl *zakkiira*/ *[Isl]* one who practises the dhikr.

اتذكر *ʃitzakar* or *ʃizzakar* /vi/ **1** to be mentioned. **2** to be remembered, be kept in mind. - iva *mitzikir*.

انذكر *ʃinzakar* = *ʃitzakar*. - iva *minzikir*.

ذكّر *zakkar* /vt/ to remind. *zakkar-u laḫsan yinsa* remind him lest he forget. *ʃil-walad zakkar-ha bi-bn-a-ha* the boy reminded her of her son. - vn *tazkiir*; ava/pva *mizakkar*.

تذكرة *tazkara* (also *taskara*) /n pl *tazaakir*/ **1** ticket. *bi-yiqṭaɛ it-tazaakir ɛala l-baab* he buys the tickets at the door. *daxalna ɛand' fibbaak it-tazaakir* we went in by the box office. ‖*nuṣṣ' tazkara* half-fare ticket. **2** prescription.

تذكرجي *tazkargi* /n pl *-yya*/ ticket-seller.

تذكار *tizkaar, tazkaar* /n pl *-aat*/ **1** souvenir. **2** memorial.

تذكاري *tizkaari, tazkaari* /adj/ **1** souvenir. *ṣuura tazkariyya* a souvenir photograph. **2** commemorative, memorial.

مذكّرة *muzakkira, muzakkara, mizakkara* /n pl *-aat*/ **1a** memorandum. **1b** formal registration of a loss etc. (made at a police station). **2** set of lecture notes handed out by a lecturer to students.

مذكّرات *muzakkaraat* /pl n/ memoirs.

اتذكّر *ʃitzakkar* or *ʃizzakkar* /vt/ to remember. *ʃitzakkarit ibn-a-ha* she remembered her son. - vn *tazakkur*↑; ava *mitzakkar*.

ذاكر *zaakir* /vt/ to study (lessons). *bi-tzaakir ʃingliizi leeh* why are you revising English? *ma-b-yiqdar-ʃ' yzaakir ʃilla bil-leel* he can study only at night. - vn *muzakra, mizakra*; ava *mizaakir*.

اتذاكر *ʃitzaakir* or *ʃizzaakir* /vi/ to be studied. - iva *mitzaakir*.

ز ك ر ² see د ك ر : *zakar', muzakkar*

ز ك ص ل –

ذوكصولوجيّة *zukṣulugiyya* <Gr *doksologia*> /n pl *-aat*/ *[Chr]* doxology.

ز ك ك

زكّ *zakk, zakk (u)* /vi/ to limp. *bi-yzukk' bif-ʃimaal* he limps with the left leg. - vn *zakakaan, zakk*; ava *zaakik*.

ز ك م

زكّم *zakam (i, u)* /vt/ to cause to suffer from nasal congestion, give a stuffy nose to. *ma-tiqfil if-fibbaak - ḫa-tizkim-ni* close the window! you'll give me a cold!

- vn *zakamaan*; ava *zaakim*; pva *mazkuum*.
زكمة *zakma, zakma* /n pl *-aat*/ a case of nasal congestion.
زكام *zukaam* /n/ nasal congestion.
اتزكم *ʃitzakam* or *ʃizzakam* /vi/ to be given or get a stuffy nose. - ava/iva *mitzikim*.
انزكم *ʃinzakam* = *ʃitzakam*. - ava/iva *minzikim*.
زكّم *zakkim* **1** /vi/ to get or be given a stuffy nose. **2** /vt/ = *zakam*. - vn *tazkiim*; ava/pva *mizakkim*.
اتزكّم *ʃitzakkim* or *ʃizzakkim* = *ʃitzakam*. - ava/iva *mitzakkim*.

ز ك ى [1]

زكا *zika* /n/ *[Isl]* alms tax (calculated according to fixed rules).
زكاة *zakaah↑* = *zika*. *zakaat il-fiṭr* alms for the poor paid by households at the end of Ramadan.
زكى *zaki[1]* /adj */ good, pleasant (especially of odours). *nafs[1] zakiyya* a virtuous person. ‖*ʃir-rawaayiḥ iz-zakiyya [iron]* the smell of the sewers.
أزكى *ʔazka[1]* /el/ more/most pleasant. ‖*ʕaleeh ʔafḍal iṣ-ṣalaah wi-ʔazka s-salaam [Isl]* a formula of praise (the best blessing and most everlasting peace be upon him) used when the name of the Prophet Muhammad is mentioned.
زكّى *zakka* **1** /vi/ *[Isl]* to give obligatory alms or donations according to Islamic precepts. ‖*zakki ʕan gamaal-ik* ≈ give us a taste of the wealth of beauty God has given you (a flirtatious remark). - *ya mzakki ḥaal-ak yibakki [prov]* (alms-giver, your state causes weeping) not all who give alms are good. **2** /vt/ to recommend. *ʔana zakkeet-ak ʕand ir-raʃiis bitaaʕ-ak* I put in a good word for you to your boss. *huwwa ḥa-yzakkii-ha lil-waẓiifa g-gidiida* he will recommend her for the new post. - vn *tazkiyya, tazkiya↑*; ava *mizakki*.
تزكية *tazkiyya, tazkiya↑* /n pl *-aat*/ recommendation. *gaab ʃihaadit tazkiyya mil-ittiḥaad l-iʃtiraaki l-ʕarabi* he got a recommendation letter from the Arab Socialist Union. ‖*faaz bit-tazkiya* to win (in an election) as an unopposed candidate.
اتزكّى *ʃitzakka* or *ʃizzakka* /vi/ to be recommended. - iva *mitzakki*.

ز ك ى [2]

ذكاء *zakaaʔ* /n/ intelligence.
ذكى *zaki[2]* /adj pl *ʔazkiya*/ intelligent.
أذكى *ʔazka[2]* /el/ more/most intelligent.

ز ك ى ب

زكيبة *zikiiba* /n pl *zakaayib*/ large gunny sack (particularly one with a capacity of one ardeb).

ز ل ب

زلابية *zalabya* /coll n/ doughnut-like sweetmeat(s) fried and soaked in syrup. ‖*miʃ kull il-waqqaat zalabya [prov]* ≈ you cannot count on getting away with it every time.
زلبانى *zalabaani* /n */ *[obsol]* maker of *zalabya*. ‖*la tquul kaani wala maani wala dukkaan iz-zalabaani* ≈ don't utter a word of protest!

ز ل ب ط ط

زلبطّة *zalabaṭṭa* /n pl *-aat*/ totally bald pate. ‖*ʕiryaan zalabaṭṭa* stark naked.

ز ل ح ف

زلحفة *zilḥifa, zulḥifa* /n pl *-aat, zalaaḥif*/ tortoise. - also *zuḥlifa, ziḥlifa, suḥlifa, sulḥifa, siḥlifa, silḥifa*.

ز ل ز ل [1]

زلزل *zalzil* /vt/ to shake (of, or as though of, an earthquake). *ṣuwat-ha zalzil il-ḥeṭaan* her screams shook the walls. - vn *zalzala*; ava/pva *mizalzil*.
زلزال *zilzaal* /n pl *zalaazil*/ earthquake.
اتزلزل *ʃitzalzil* or *ʃizzalzil* /vi/ to be shaken (by, or as though by, an earthquake). - iva *mitzalzil*.

ز ل ز ل [2]

زلزلى *zilizli* /coll n/ porcelain-like wall-tile(s).

ز ل ط

زلط *zalaṭ[1] (u)* /vt/ **1** to swallow (food) without chewing, gulp down (food). **2** to strip clean, shave clean. *zalaṭ raas-u* he shaved his head clean. ‖*zalṭ' malṭ* stark naked. - vn *zalṭ*; ava *zaaliṭ*; pva *mazluuṭ*.
زلط *zalaṭ[2]* /n/ **1** /coll/ gravel, pebble(s). *ʃiz-zalaṭ iṣ-ṣawwaan* flint. *ʃiz-zalaṭ il-ʃiswid* basalt. *miʕdit-u tihḍim iz-zalaṭ* he'll eat anything. *ʃig-gaʕaan yiqarqaf iz-zalaṭ [prov]* (a hungry man will chew gravel) a desperate man will try anything. *ḥabiib-ak yiblaʕ-lak iz-zalaṭ wi-ʕadiww-ak yitmannaa-lak il-ʕalaṭ [prov]* ≈ your friend will accept anything you do, but your enemy is always trying to find fault. *wabuur iz-zalaṭ* steam-roller. **2** aborted foetus (of an animal).
زلطة *zalaṭa* /unit n, pl *-aat*/ a pebble. ‖*raas-u zalaṭa* (1) he's bald. (2) he has a shaven head. (3) he is obstinate. - *muxx-u zayy iz-zalaṭa* ≈ he's a blockhead.
أزلط *ʔazlaṭ* /adj, fem *zalṭa*, pl *zulṭ*/ bald. *raas zalṭa* a bald head.

زلّوط *zalluuṭ↓ : ɛeef zalluuṭ* brown bread made in large thick round loaves.

اتزلط *ʃitzalaṭ* or *ʃizzalaṭ* /vi/ **1** to be swallowed without chewing. **2a** to strip oneself, undress oneself. *ʃitzalaṭt[i] min huduum-i* I took off my clothes. **2b** to be stripped, be made bare. *raas-i tzalaṭit (bil-muus)* my head was completely shaven. - ava/iva *mitziliṭ*.

انزلط *ʃinzalaṭ = ʃitzalaṭ*. - iva *minziliṭ*.

زلّط *zallaṭ* **1** /vt/ **1a** to lay gravel or pebbles on (a road). **1b** *[rur]* to plaster (a wall or floor) with mud or clay. **2** /vi/ to become smooth and hard. *ʃil-arḍ[i] zallaṭit* the ground dried hard. *raas-u zallaṭit* he became bald. - vn *tazliiṭ*; ava/pva *mizallaṭ*.

اتزلّط *ʃitzallaṭ* or *ʃizzallaṭ* /vi/ passive of *zallaṭ* 1. - iva *mitzallaṭ*.

ز ل ع

زلعة *zalɛa* /n pl *zilaɛ*/ large storage jar with handles (usually for water) (see Pl.A, 10).

زلّع *zallaɛ* /vt/ **1** to accept with difficulty, force upon oneself. *ʃil-waaḥid miʃ ɋaadir yizallaɛ il-luɋma fil-ḥarr-i-da* one is unable to force down any food in this heat. **2** to store in a *zalɛa*. - vn *tazliiɛ*; ava/pva *mizallaɛ*.

اتزلّع *ʃitzallaɛ* or *ʃizzallaɛ* /vi/ **1** to be accepted with difficulty. **2** to be stored in a *zalɛa*. - iva *mitzallaɛ*.

ز ل ع ك

زلعكة *zalɛukka* /n pl *-aat*/ a small *zalɛa*. ‖ *ʃil-bitt[i] ḥilwa w-beeḍa bass[i] ʃayla s-samna fiz-zalɛukka [rur]* a village wedding-song complimenting the bride on her beauty even though she is an unsophisticated country-girl.

ز ل ف

زلف *zalaf (i)* /vi/ to slip, trip. *kilma zalafit min lisaan-i ma-kunt[i]-ʃ ɋaaṣid ʃaɋul-ha* a word slipped out which I had never intended to utter. - vn *zalafaan*; ava *zaalif*.

اتزلّف *ʃitzallif* or *ʃizzallif* /vi/ to fawn (on s.o.), make up (to s.o.). *balaaf titzallif lil-mudiir* don't fawn on the director. - ava *mitzallif*.

ز ل ق

زلق *zalaɋ[1] (u)* /vi/ to slip, slide, glide. *riglay-ya zalaɋit fiṭ-ṭiin* my feet slipped in the mud. - vn *zalaɋ, zalɋ, zalaɋaan*; ava *zaaliɋ*.

زلق *zalaɋ[2]* /n/ (street) mud. - /adjectivally/ *kull is-sikak zalaɋ* all the roads are slippery.

زلقة *zalaɋa = zalaɋ[2]*.

زلاقة *zallaaɋa* /n pl *-aat*/ **1** slide, chute. **2** sleigh, sled.

زلّيق *zulleeɋa* /n pl *-aat*/ slippery road or path.

مزلقان *mazlaɋaan* /n pl *-aat*/ **1** railway crossing. **2** *[naut]* slip.

انزلق *ʃinzalaɋ*. /vi/ to slip, slide, glide. *minziliɋ fooɋ saṭḥ il-mayya* gliding along the surface of the water. ‖ *ʃinzilaaɋ ɣuḍruufi [path]* slipped disc, prolapsed disc. - vn *ʃinzilaaɋ*; ava *minziliɋ*.

زلّق *zallaɋ* **1** /vt/ to make slippery or muddy. **2** /vi/ to become slippery or muddy. - vn *tazliiɋ*; ava/pva *mizallaɋ*.

اتزلّق *ʃitzallaɋ* or *ʃizzallaɋ* /vi/ to become or be made slippery. - ava/iva *mitzallaɋ*.

ز ل ق و م

زلقومة *zaːɋuuma* /n/ protrusion.

ز ل ق و ن

زلقون *zalaɋoon* <perh T *sülüğen*> /n/ red lead. - also *salaɋoon*.

ز ل ك

see ز ا : *zaalik*

ز ل ل [1]

زلّ *zall[1] (i)* /vi/ to slip. *rigl-i zallit* my foot slipped. ‖ *ɛen-ha zalla* she has a roving eye, she is a loose woman. - vn *zalalaan, zall*; ava *zaalil*.

زلّة *zalla* /unit n, pl *-aat*/ a slip, a mistake, an error, a sin. *ya-rabb iɣfir-li zallaat-i* O God, forgive my sins. *zallit lisaan* a slip of the tongue. ‖ *zallit ɋadam* (a slip of the foot) ≈ a sin.

زلل *zalal = zalla*.

ز ل ل [2]

زلال *zalaal* /adj invar/ pure (of water). ‖ *ḥalaal-i zalaal-i* it's my own to enjoy.

زلال *zulaal* /n/ **1** albumen. **2** oedema.

زلالي *zulaali* /adj */ of or pertaining to *zulaal*.

ز ل ل [3]

ذلّ *zall[2] (i)* **1** /vt/ to humiliate, debase. *ma-fii-ʃ ḥaaga bi-tzill il-bani ʃaadam zayy il-ḥawga* nothing humiliates a man like want. ‖ *ḥ-azill-ak* I'll show you! I'll bring you low! **2↑** /vi/ to become lowly, be debased. *w-adii-ni ʃahu baɛd il-ɛizz[i] zalleet* after enjoying greatness here I am reduced to nothing. *ɛazz[i] man ɋanaɛ wi-zall[i] man ṭamaɛ [prov]* ≈ he who is content is strong, but he who is greedy is brought low. - vn *zull*; ava *zaalil*; pva *mazluul*.

ذلّ *zull* /n/ humiliation, abasement. *firib min kaas iz-zull* he has drunk from the cup of shame.

ذلّة *zilla, zulla* /n pl *-aat*/ shameful mistake. *ʃinta*

ḥa-timsik-ha ɛalayya zilla are you going to use it against me forever? *zayy' ma ykuun waqiɛ-li ɛala zulla* ≈ (he orders me around) as if he knows a guilty secret (whose exposure I would do anything to avoid).

ذليل *zaliil* /adj pl ʕ*azilla*/ despicable, contemptible.

أذلّ ʕ*azall* /el/ more/most debased.

اذلال ʕ*izlaal* /n/ humiliation, debasement.

مذلّة *mazalla* /n/ humiliation. ʕ*if-fakwa l-ɤeer allaah mazalla [prov]* to complain to other than God is a humiliation.

اتذلّ ʕ*itzall* or ʕ*izzall* /vi/ to be humiliated, be debased. - iva *mitzall*.

انذلّ ʕ*inzall* = ʕ*itzall*. - iva *minzall*.

ذلّل *zallil* /vt/ to overcome, surmount. *laazim nizallil kull iṣ-ṣuɛubaat marra waḥda* must we overcome all the difficulties at once? - vn *tazliil*; ava/pva *mizallil*.

اتذلّل ʕ*itzallil* or ʕ*izzallil* /vi/ **1** to be overcome, be surmounted. **2** to humble oneself, lower oneself (before s.o.). ʕ*itzallilt-i-lu min ɤeer fayda* in vain did I humble myself before him. - vn *tazallul*↑; ava/iva *mitzallil*.

استذلّ ʕ*istazall* /vt/ to subjugate, bring into submission or thrall. ʕ*inta ḥa-tistizill-a-ha bil-filuus illi xadit-ha minnak* are you going to enslave her for the money she took from you? - ava *mistizill*.

ز ل ل و م

زلّومة *zalluuma* /n pl *-aat, zalaliim*/ trunk of an elephant.

ز ل م ك

زلّكة *zalamukka* /n pl *-aat*/ parson's nose (of a fowl). - also *zamuuka, zamukka*.

ز ل ن ط ح

زلنطحي *zalanṭaḥi* /pl *-yya*/ **1** /adj/ penniless, destitute. **2** /n/ vagabond, tramp.

ز م ا ل ك

الزمالك ʕ*iz-zamaalik* /prop n/ upper class district of Cairo, situated on the Guezira.

زملكاوى *zamalkaawi* /n pl *-yya*/ one who supports or plays for the Zamalek Sports Club (especially the football team).

ز م ب see ز ن ب

ز م ب ر see ز ن ب ر

ز م ب ق see ز ن ب ق

ز م ب ل see ز ن ب ل

ز م ب ل ك see ز ن ب ل ك

ز م ب و خ see ز ن ب و خ

ز م ب ي ل see ز ن ب ي ل

ز م ت

see also ز ن ت ¹

زمت *zamat (i)* /vi/ to become sultry or stifling (of weather). - vn *zamataan*; ava *zaamit*.

زمتة *zamta* /n/ sultriness, stuffiness. - /adjectivally/ ʕ*id-dinya zamta* the weather's stifling.

زمّت *zammit* /vt/ to stifle, suffocate. *sidr-i mzammit* my chest is constricted. - vn *tazmiita*; ava/pva *mizammit*.

اتزمّت ʕ*itzammit*↑ or ʕ*izzammit*↑ /vi/ to become strict or puritanical. - vn *tazammut*; ava *mitzammit, mutazammit*.

ز م ج ر

زمجر *zamgar* /vi/ to roar (of a lion). - vn *zamgara*; ava *mizamgar*.

ز م ر ¹

زمر *zumur'* see *zamr*.

زمر *zamr* /n/ piping, piping sound. *ṭabl' w-zamr* (1) drumming and piping. (2) fanfare, great deal of noise. *ṭubul ṭabl-u w-zumur zamr-u* he became widely known, he became prominent. *li-llaah ya zamr-i* ≈ all my effort has been wasted.

زمّار *zammaar* /n pl *-iin, zammaara*/ piper. *yimuut iz-zammaar wi-ṣbaaɛ-u yilɛab [prov]* the piper dies and his finger (still) plays.

زمّارة *zummaara* /n pl *-aat, zamamiir*/ **1** pipe or flute-like instrument made of cane or wood, penny whistle. ‖*ḥ-aṭallaɛ zummaarit raqabt-ak* I'll tear out your windpipe! - *tigmaɛ-hum zummaara wi-tfarraq-hum ɛaṣaaya [prov]* a pipe gathers them, a stick scatters them (of the mob). **2** sound made on the horn of a vehicle. ʕ*iḍrab-lu zummaara* sound your horn at him! give him a hoot!

زمّيرة *zummeera* = *zummaara*.

مزمار *muzmaar* /n pl *mazamiir*/ wind instrument made of cane or wood. *muzmaar baladi* double-reed wooden pipe with a flared bell (see Pl.J, 18). *muzmaar nitaaya* pipe of the *baladi* type in the treble range. *muzmaar dakar* pipe of the *baladi* type in the baritone range. *muzmaar turki* double or treble bamboo pipe (see Pl.J, 21).

مزمور *mazmuur* /n pl *mazamiir*/ psalm.

زمّر *zammar* /vi/ **1** to pipe, play on a musical wind in-

strument. *ʕilli yzammar ma-yvaṭṭii-ʃ daqn-u [prov]* (the piper cannot cover his chin) ≈ you cannot hide your actions. **2** to hoot (on a vehicle's horn). - vn *tazmiir*; ava *mizammar*.
اتزمّر *ʔitzammar*[1] or *ʔizzammar*[1] /vi/ to be played on a *muzmaar*. - iva *mitzammar*.

ز م ر[2]
زمر *zimir, zumur*[2↓] *(a)* /vi/ to grumble, complain, be discontented. - vn *zamar*; ava *zamraan*.
زمران *zamraan*[↓] /adj */ grumbling, discontented.
اتذمّر *ʔitzammar*[2] or *ʔizzammar*[2] /vi/ to grumble in resentment, complain, grouse. - vn *tazammur*; ava *mitzammar*.

ز م ر[3] see ز م م ى ر : *zummeer*

ز م ر د
زمرّد *zumurrud* /coll n/ emerald(s). ‖*zumurrud ʕaṣfar* topaz.
زمرّدة *zumurruda* /unit n, pl *-aat*/ an emerald.
زمرّدى *zumurrudi* /adj/ of or pertaining to emeralds.

ز م ز غ
زمزغ *zamzaɣ* /vi/ **1** to cheat (in money matters, games or gambling). **2a** to break a promise. **2b** to give a false promise. - vn *zamzaɣa*; ava *mizamzaɣ*.

ز م ز ق
زمزق *zamzaq* /vi/ **1** to grumble, complain. *qaʕad yizamzaq lamma ṭalabna ʕinnu ysaʕid-na* he grumbled when we asked him to help. **2** to behave crookedly (over money). *zamzaq fid-deen* he was devious concerning (payment of) the debt. - vn *zamzaqa*; ava *mizamzaq*.

ز م ز م
زمزم *zamzam* /prop n/ name of a well at Mecca. ‖*min mayyit zamzam [Isl]* invocatory formula addressed to one performing ritual ablutions (the response being *gamʕan*).
زمزميّه *zamzamiyya* /n pl *-aat*/ water-canteen (made of metal or canvas).
زمزم *zamzim* **1** /vt/ to wash (s.th.) in water from the well *zamzam*. **2** /vi/ to wash oneself in water from the well *zamzam*. - vn *zamzama*; ava/pva *mizamzim*.
اتزمزم *ʔitzamzim* or *ʔizzamzim* /vi/ to be washed in water from the well *zamzam*. - iva *mitzamzim*.

ز م ط
زمط *zamaṭ (u)* **1** /vt/ to make tight, make a tight fit. *ʕit-tarzi zamaṭ il-badla zyaada ʕan il-luzuum* the tailor made the suit too tight. **2** /vi/ to become tight. *ʕig-gazma g-gidiida zamṭa ʕala riglay-ya* the new shoes are a tight fit. *baṭn-i zamaṭit ʕalayya* my stomach became distended. - vn *zamṭa*; ava *zaamiṭ*.
زمّط *zammaṭ = zamaṭ*. - vn *tazmiiṭ*; ava/pva *mizammaṭ*.
تزميطة *tazmiiṭa* /pl *-aat*/ instance noun of *tazmiiṭ*.
اتزمّط *ʔitzammaṭ* or *ʔizzammaṭ* /vi/ **1** to dress in tight clothes. **2** to become distended (of the stomach). - ava/iva *mitzammaṭ*.

ز م ق
زمق *zimiq, zumuq (a)* /vi/ to feel bored, fed up or weary. - vn *zamaq, zamaqaan*; ava *zamqaan*.
زمقان *zamqaan* /adj */ bored, fed up, weary.

ز م ك
زمّكة *zamukka* /n pl *-aat*/ **1** root, dock (of a horse's tail). **2** parson's nose (of a fowl). - also *zalamukka*.
زموكة *zamuuka = zamukka*.

ز م ل
زملة *zumla* /adv/ in a group. *ħa-nħigg[i] zumla* we'll go on the pilgrimage as a group.
زمالة *zamaala* /n/ comradeship.
زميل *zimiil, zamiil* /n pl *zumala, zamaayil*/ **1** colleague, team-mate. *kaan zimiil-i fil-madrasa* he was my schoolmate. *zamayl-u fif-fuvl* his workmates. **2** companion.
زميلة *zimiila, zamiila* /n pl *-aat, zumalaat*/ **1** female colleague. **2** female companion.
زامل *zaamil* /vt/ **1** to take or have as a colleague or companion. **2** *[rur]* to co-operate with, exchange services with. *ʕandu ħumaara waħda bi-yzaamil ʕaleeha gaar-u* he owns one donkey, which he pairs up with that of his neighbour (on a turn and turn about basis). - vn *muzamla, mizamla, zimaala*; ava *mizaamil*.
اتزامل *ʔitzaamil* or *ʔizzaamil* /vi/ passive of *zaamil*. - ava *mitzaamil*.

ز م ل ك see ز م ا ل ك : *ʔiz-zamaalik, zamalkaawi*

ز م م[1]
زمّ *zamm[1] (i)* /vt/ to press, press together. *zamm[i] fafayf-u* he pressed his lips together. - vn *zamm, zamamaan*; ava *zaamim*; pva *mazmuum*.
زمام *zimaam[1]* /n/ **1** /pl *-aat/ [leg]* area of jurisdiction. *zimaam il-balad* tax-paying lands of a village. *ʕaraaḍi daaxil iz-zimaam* tax-paying lands. *ʕarḍ[i] xaarig iz-zimaam* an area of land which pays no taxes. *misaaħit fakk iz-zimaam* survey concerned with establishing

areas of land ownership. **2** /pl *ʕazimma↑*/ halter, rein, bridle. ‖*zimaam jil-ʕumuur* control of affairs. - *ʕitwalla zmaam il-ḥukm* ≈ to seize the reins of power. - *ʕiz-zimaam filit minnu* he lost control.

زمّم *zammim* /vt/ to squeeze the breath out of (s.o.). - vn *tazmiim*; ava/pva *mizammim*.

اتزمّم *ʕitzammim* or *ʕizzammim* /vi/ to have the breath squeezed out of one. - iva *mitzammim*.

ز م م ²

ذمّ *zamm², damm² ↓(i)* /vt/ to speak ill of. *qabl' ma tzimmi walla timdaḥi ḥuṭṭi nafs-ik fi-maṭraḥ-i [prov]* put yourself in my place before you judge me. - vn *zamm*; ava *zaamim*; pva *mazmuum*.

ذمّة *zimma* /n pl *zimam*/ **1** integrity, sense of decency. *ma-baqaa-ʃ fii zimma wala ʕimaan* there is no longer any integrity or faith. ‖*ma-ɛanduu-ʃ zimma* he's dishonest. - *zimmit-u wasɛa* or *zimmit-u ʕastik* he's a man of flexible integrity. - *xallaṣt' zimmit-i* my conscience is clear, I've done all I can. - *biz-zimma* and *bi-* (or *fi-*) *zimmit-ak* honestly? is that really so? as in *bi-zimmit-ak miʃ fuxl-u mazbuuṭ* honestly now, isn't his work good? - *bi-zimmit-i* really, truly, as in *bi-zimmit-i ʕinti gamiila* really, you're beautiful! **2** custody, care. *ɛandu f-zimmit-u mablaɣ kibiir* he has a large sum in his custody. ‖*fi-zimmit-(u) li-* (he) owes ..., as in *fi-zimmit-i l-ṣaaḥib il-beet ʕugrit talatt uʃhur* I owe the landlord three months' rent. - *fi-* (or *ɛala) zimmit* (1) for the purpose of, as in *ḥagz[a] ɛala zimmit it-taḥqiiq* detention pending investigation. (2) dependent upon, as in *lu talat ɛiyaal fi-zimmit-u* he has three children dependent upon him. (3) married to (said only of women), as in *ma-baqit-ʃ' f-zimmit-i* she's no longer my wife, *ʕil-itneen ɛala zimmit-u* the two of them are his wives.

ذمام *zimaam²* /n pl *-aat*/ *[bank]* claim (in the form of a debit or credit).

اتذمّ *ʕitzamm* /vi/ to be ill-spoken of. - iva *mitzamm*.

انذمّ *ʕinzamm* = *ʕitzamm*. - iva *minzamm*.

ز م م ي ر

زمّير *zummeer* /n/ wild oats (Arena fatua). ‖*naas zayy iz-zummeer* people who crop up everywhere they aren't wanted.

ز م ن

زمن *zaman* /n pl *ʕazmaan*/ **1** period, age, era. *ʕiz-zaman da wiḥiʃ* these are bad times. *da min zaman biɛiid* that was ages ago. *fi-zaman il-malik fuʕaad* in the era of King Fuad. ‖*ḥa-naaxud zaman-na w-zaman yerna* (shall we take our time and that of others too?) we've had our time, one can't expect to live twice over. — /no pl/ **2** (absolute) time. *baqa-lha waqfa ɛal-maḥaṭṭa saɛteen zaman* she's been waiting at the bus stop for two whole hours. *qadiim qidam iz-zaman* as old as time. *balwa min balaawi z-zaman* an all time disaster. ‖*ɛala ʕaaxir iz-zaman* ≈ things have come to a pretty pass when ..., as in *ɛala ʕaaxir iz-zaman bi-tkallim-ni biṭ-ṭariiqa di* it's come to a pretty pass when you speak to me like that, *ʕil-ʕawlaad itxanfisu ɛala ʕaaxir iz-zaman* bad times are really here now that boys have become hippies. - *ʕana w-huwwa wiz-zaman ṭawiil* ≈ I'll get even with him in the end! **3** fortune, life. *hiyya b-tiftikii-li miz-zaman* she's complaining to me about life. *ʕaah minnak ya zaman* oh life, how hard you are! *ʕirkin-ha liz-zaman* ≈ put it aside for a rainy day!

زمنى *zamani* /adj/ time-, pertaining to time, temporal. *qunbila zamaniyya* time-bomb.

زمان *zamaan* /n/ **1** time, period, era. *zamaan il-mamaliik* the days of the Mamelukes. *doon juwaan zamaan-u* the Don Juan of his time. *da sulṭaan zamaan-u* ≈ he's got it made, he's in clover. **2** long period of time, age. *w-alla zamaan* it's been ages! (since I saw you). *baqaa-li zamaan ma-kalt'-ʃ ruzz' b-laban* it's an age since I ate rice pudding. *da min zamaan* that was ages ago. *ma-ʃuft-a-haaʃ min zamaan* I haven't seen her for ages. **3** times past, the old days. *zayy' zamaan* as it used to be. *feen qahwit zamaan* where's the coffee we used to drink in the (good) old days? *kaanu b-yistaɛmiluu-ha zamaan* they used to use it in the old days. **4** proper or expected moment. *zaman-ha gayya* she ought to be along at any moment. *zamaan-ak guɛt* you must be hungry by now. *kaan zamaan kull[a] ḥaaga xilṣit law kunti saɛidtii-ni* everything would have been completed by now if you'd helped me.

مزمن *muzmin* /adj/ chronic (of an illness).

ز م ه ر

زمهرير *zamhariir↑* /n/ bitterly cold weather. - /adjectivally/ *ʕid-dinya zamhariir* it's bitterly cold.

ز ن ب ¹

زنبة *zumba* <T *zımba*> /n pl *zunab*/ **1** punch, centre punch. **2** stab in the back, dirty and malicious trick. *ḍarab-ni* (or *ʕiddaa-li) zumba* he played a dirty trick on me.

زنبجى *zumbagi* /n pl *-yya*/ back-stabber, player of dirty and malicious tricks.

ز ن ب ²

ذنب *zamb* /n pl *zunuub*/ fault, offence, sin. *ʕiz-zamb'*

miſ-ɛaleena it's not our fault! *ma-luu-ſ zamb* it's no fault of his. *rabb-i-na yixfir-lu znuub-u* may God forgive him his sins. *ţabuur zamb* punishment drill. ‖ *ſana zamb-i ſeeh* (1) what fault is it of mine? (2) what's it got to do with me? (3) what did I do to deserve this? - *(ya-tara) zamb[i] miin* phrase suggesting that the victim of an apparently chance circumstance has committed in the past a wrong which has caught up with him. - *zamb-u ɛala gamb-u* he'll get (or: he has got) his just deserts.

ذنّب *zannib* /vt/ to punish. *law ma ɛamalt[i]-ſ il-waagib ħa-yzannibuu-ni fil-madrasa* if I don't do my homework they'll punish me at school. *zannib-ni saaɛa fiſ-ſams[i] w-ſana fi-ntiẓaar-u* he left me standing in the sun for an hour, waiting for him. - vn *tazniib*; ava/pva *mizannib*.

تذنيبة *tazniiba* /inst n, pl *-aat*/ penalty, punishment, unjust desert. *huwwa-na ɛamalt[i] ſeeh ɛaſaan ſazzannib it-tazniiba di* what have I done that I should be subjected to this punishment?

اتذنّب *ſitzannib* or *ſizzannib* /vi/ to be punished. - iva *mitzannib*.

أذنب *ſaznab* /vi/ to do wrong, commit a sin, make a mistake. *huwwa-na ſaznabt[i] f-ħaqq-ak* ≈ have I (ever) wronged you? - ava *muznib*.

مذنب *muznib* /adj */ guilty.

ز ن ب ر

زنبور *zambuur* /n pl *zanabiir*/ **1**↑ hornet. **2** *[coarse]* clitoris.

ز ن ب ق

زنبق *zambaq[1]* /coll n, pl *zanaabiq*/ *[bot]* **1** iris. **2** lily. ‖*zambaq il-baħr* starfish.

زنبقة *zambaqa* /unit n, pl *-aat, zanaabiq*/ **1** an iris. **2** a lily. ‖*zanbaqit baħr* a starfish.

زنبق *zambaq[2]* /vi/ to blossom (especially of an iris or lily). - vn *zambaqa*; ava *mizambaq*.

ز ن ب ل -

زنبليطة *zambaliiţa* /vi/ noise, commotion, stir. *zeeţa w-zambaliiţa* brouhaha. *ſeeh iz-zambaliiţa di kull-a-ha* what's all this clamour about?

ز ن ب ل ك

زنبلك *zambalik* <T *zemberek*> /n pl *-aat*/ (metal) spring. *ɛarabiyya b-zambalik* a clockwork car.

ز ن ب و خ

زنبوخ *zambuux* /n/ seed case.

ز ن ب ى

زنوبيا *zanubya* <trade name> /n/ kind of cheap cigar.

ز ن ب ى ل

زنبيل *zambiil* <P *zanbîl*> /n pl *zanabiil*/ large basket made of green palm leaves.

[1] ز ن ت see also ز م ت

زنتة *zanta* /n/ closeness (of the weather).

زنت *zannit* /vi/ to become close or stifling (of the weather). - vn *tazniit*; ava *mizannit*.

تزنيتة *tazniita* = *zanta*.

[2] ز ن ت

الزناتى *ſiz-zanaati: ſiz-zanaati xaliifa* a warrior hero of popular epic.

ز ن ت ر

زنتر *zantar* /vi/ to become bloated. *kal wi-baţn-u zantarit* he ate and his stomach became bloated. - vn *zantara*; ava *mizantar*.

اتزنتر *ſitzantar* or *ſizzantar* = *zantar*. - ava *mitzantar*.

ز ن ت و -

زنتورى *zanatuuri* <It *isolatore*> /n pl *zanatiir*/ *[elec]* insulator (made of glass or porcelain).

[1] ز ن ج

زنجى *zingi* /n pl *zunuug*/ negro.

[2] ز ن ج see ز ن ك : *zing, zinga, mizannig*

ز ن ج ب ل

زنجبيل *zangabiil* /n/ ginger. - also *ganzabiil, zanzabiil*.

ز ن ج ر

زنجر *zangar* /vi/ to become obstinate, behave obstinately. - vn *zangara*; ava *mizangar*.

ز ن ج ر -

زنجران *zingaraan* /n/ *[mus]* mode in Arabic music beginning on C and having D flat and B flat.

ز ن خ

زنخ *zinix* /adj/ rancid. ‖*muxx-u zinix* he's stupid, he's slow on the uptake.

أزنخ *ſaznax* /el/ more/most rancid.

زناخة *zanaaxa* /n/ rancidness.

زنّخ *zannax, zannix* /vi/ to turn rancid. - vn *tazniix*; ava *mizannax*.

استزنخ ʃistaznax /vt/ to consider rancid. - ava *mistaznax*.

ز ن د

زند *zind* /n pl *zunuud, zinída, zunúda, zinaad*/ **1** shoulder and upper foreleg (of animal). **2** forearm (of a human).

زناد *zinaad* /n pl *zinída*/ trigger.

زنّد *zannid* /vt/ **1** to straighten and stiffen (e.g., the neck or the back). *maa lak waaqif mizannid-li raqabt-ak - ha-titxaaniq maʕaaya* what are you doing bridling at me like that? you want to pick a fight with me? *zannid qahr-u w-naxaʕ il-ʕarabiyya* he straightened his back and heaved the car forward. **2** /vi/ to be stubborn, balk, refuse, reject. *kull-u-hum wafqu ʃilla huwwa zannid* they all agreed but he refused stubbornly. - vn *tazniid*; ava *mizannid*.

تزنيدة *tazniida* /inst n/ **1** a tensing, a stiffening. **2** an opposition, a refusal, a balking.

اتزنّد ʃitzannid or ʃizzannid /vi/ to be straightened and stiffened or straighten and stiffen (of the neck or back). - ava/iva *mitzannid*.

ز ن د ق

زندق *zandaq* /vi/ to oppose, challenge, contradict. *ha-tzandaq fi-wiff-i* you dare to set yourself against me? - vn *zandaqa*; ava *mizandaq*.

زندقة *zandaqa* /n/ atheism, gross heresy.

زنديق *zindiiq* /n pl *zanadqa, zanadiiq*/ atheist, gross heretic.

اتزندق ʃitzandaq or ʃizzandaq /vi/ to become or behave as a heretic or atheist. *zayy if-fiʈaan ʈtzandaq fi-ʃaaxir ħayaat-u* like the devil, he ended his life an infidel. - ava *mitzandaq*.

ز ن ر

زنار *zinnaar* /n pl *zananiir*/ **1** *[Chr]* girdle (of a priest). **2** *[naut]* gunwale strake, topmost horizontal timber in a boat's hull.

ز ن ز ا ن

زنزانة *zinzaana* <prob P *zindân*> /n pl *-aat, zanaziin*/ prison cell.

ز ن ز ب ل

زنزبيل *zanzabiil* /n/ ginger. - also *ganzabiil, zangabiil*.

ز ن ز ن

زنزن *zanzin* /vi/ to buzz, make a low vibrating humming sound. *ʃiʈ-ʈabla bi-tzanzin* the drum is buzzing (i.e. not sounding true). - vn *zanzana*; ava *mizanzin*.

زنزان *zinzaan* /n/ **1** obnoxious pestering. **2** headache caused by irritation. *rabbaa-li zinzaan fi-dmaaʏ-i* he pestered me till he gave me a headache.

ز ن ط ر see ز ن ت ر

ز ن ق

زنق *zanaq (u)* /vt/ to squeeze into a confined space, wedge in, corner. *ma-tuznuq-f' xaʟʟ-ak kida* don't cramp up your writing like that! *zanaqt' ṣbaaʕ-i fil-baab* I got my finger caught in the door. *zanaqna ʈuuba taħt il-kawitʃ* we jammed a stone under the wheel. *zanaquu-ni fil-munaqʃa* they got me into a corner in the discussion. *zanaq-li l-wazilr* he penned in my queen (in chess). ‖*maznuuq fil-filuus* in a tight spot for money. - *kaan maznuuq wi-ma-laqaa-ʃ kabineeh* he was caught short and didn't find a lavatory. - vn *zanq*; ava *zaaniq*; pva *maznuuq*.

زنقة *zanqa* /n pl *-aat*/ **1** crush, lack of space. *kaan fii zanqa gamda fig-gamʕiyya* there was an awful crush in the co-op. **2** tight spot, difficult position or situation. *kaanit fi-zanqa wiħʃa w-ʃana saʕidt-a-ha* she was in an embarrassing situation and I helped her out. **3** narrow lane, alley. - /adjectivally/ *ʃil-ħaara di zanqa* this lane is narrow. **4** *[carp]* cramping wedge.

أزنق ʃaznaq /el/ more/most narrow or tight.

زناق *zinaaq* /n/ throat latch, throat band (of a horse, donkey etc.).

زناقة *zinaaqa, zannaaqa* /n pl *-aat*/ any of a range of devices for holding something tightly in place or confined (as a tightening nut, a wedge, a mud barrier to check the flow of water in a channel, a halter for holding an animal).

اتزنق ʃitzanaq or ʃizzanaq /vi/ **1** to be squeezed or squeeze oneself (into a confined place etc.). *bi-yħibb' yizziniq fis-sittatt fil-ʃutubiis* he likes to press himself up against women in the bus. **2** to be put in or get into a tight spot. *ʃil-mumassiliin lamma yizzinqu bı-ybuṣṣu lil-mulaqqin ʕaʃaan yilħaq-hum* when the actors get stuck, they look to the prompter to help them. - ava/iva *mitziniq*.

انزنق ʃinzanaq = ʃitzanaq. - ava/iva *minziniq*.

زنّق *zannaq* = *zanaq*. - vn *tazniiq*; ava/pva *mizannaq*.

¶ *zannaq ʕala* to crowd in on. *sawwaaq il-ʃutubiis zannaq ʕalayya* the bus-driver hemmed me in. *ʃiwayyit ʃubbaan maʃyiin fiʃ-ʃaariʕ bi-yzannaqu ʕal-banaat* a group of youths walking in the street crowding the girls. ‖*humma mzannaqiin ʕalayya fil-filuus* they keep me hard-up for money.

تزنيقة *tazniiqa* /n pl *tazaniiq*/ = *zanqa* 1, 2.
اتزنق *ʃitzannaq* or *ʃizzannaq* /vi/ **1** to be made tight. **2** to squeeze oneself (e.g., into a confined place). - ava/iva *mitzannaq*.

ز ن ق و ر
زنقور *zanquur, zanquur* /n pl *zanaqiir, zanaqiir*/ corner, niche.
زنقورة *zanquura, zanquura* = *zanquur*.

ز ن ك
زنك *zink* (also *zing*) <Engl> /n/ zinc.
زنكة *zinka* (also *zinga*) /n pl *-aat*/ **1** zinc plate. **2** vessel of zinc (especially a zinc flower-vase).
مزنّك *mizannik* (also *mizannig*) /adj */ zinc-plated.

ز ن ك غ -
زنكوغراف *zinkuɣraaf* <Engl> /n/ zincography.

ز ن ن
زن *zann (i)* /vi/ **1** to buzz, hum. **2** to whine, nag, pester. *ʃil-wad bi-yzinn^{i} miʃ-ʂubḥ* ≈ the baby's been fretting for ages. *dabbuur zann^{a} ɛala xraab ɛiff-u [prov]* (a wasp that brought about the destruction of its own nest through its buzzing) ≈ he asked for it! *ʃiz-zann^{a} ɛal-widaan ʃaqwa mis-siḥr [prov]* nagging in the ears is worse (and more effective in achieving its aim) than witchcraft. – /vt/ **3** to give a beating to. *zann-u ɛalqa* he gave him a hard beating. - vn *zann*; ava *zaanin*.
زنّة *zanna* /n pl *-aat*/ hum, buzzing sound. ‖ *ʃabu zanna* one afflicted by ringworm of the scalp.
زنّان *zannaan* /adj */ constantly nagging and pestering.
اتزن *ʃitzann* or *ʃizzann* /vi/ to be given a beating. - iva *mitzann*.

ز ن ن و ب
زنوبة *zannuuba* **1** /n pl *zananiib*/ rubber sandals consisting of a flat sole fastened to the foot by thongs between the toes. **2** /prop n/ nickname for Zaynab.

ز ن ه ا ر
زنهار *zinhaar* <P *zinhâr*> **1** /adv/ erectly, vertically. *waaqif zinhaar* standing upright. **2** /interj/ *[mil, obsol]* attention! beware!

ز ن ه ر
زنهر *zanhar* /vi/ to become flushed, become blood-red. *wiff-a-ha mzanhar min kutr ig-gary* her face is flushed from so much running. - vn *zanhara, tizanhiir*; ava *mizanhar*.

ز ن ه م see ^{1} ز ي ن : *zen-hum*

ز ن ى
زنى *zana (i)* /vi/ to commit fornication or adultery. ‖ *zana fiiha* (1) he committed fornication with her. (2) she is his illegitimate daughter. - vn *zina*; ava *zaani*.
زنى *zina* /n/ fornication, adultery. *ʃibn^{i} zina* bastard.
زانى *zaani* /n */ fornicator, adulterer. *ʃiz-zaani yxaaf ɛala mraat-u [prov]* the adulterer worries over (the fidelity of) his wife.
زانية *zanya* /n pl *zawaani*/ fornicatress, adultress, profligate woman. *ya-bn iz-zanya* you son of a whore!
اتزنى *ʃitzana* or *ʃizzana* /vi/ (impersonal) passive of *zana*. *ʃitzana fiiha* someone committed fornication with her. - iva *mitzini*.

ز ه
زه *zeh* /fem n, pl *-aat*/ eleventh letter of the Arabic alphabet. - also *zaay, zeen*.

^{1} ز ه ب
ذهب *zahab (a)* /vi/ to go, go away. *ʃiza ḥaḍarit il-malayka zahabit if-fayaṭiin [prov]* when angels are present, devils depart. *saaɛit ma ʃaf-ha ɛaql-u zahab* as soon as he saw her he took leave of his senses. ‖ *taẓkarit zihaab wi-ʃiyaab* round-trip ticket. - vn *zihaab*; ava *zaahib*.
ذهوب، زهوب *zahuub* /n/ *[slang]* pound (money).
مذهب *mazhab* /n pl *mazaahib*/ **1** method or procedure followed. **2** *[Isl]* orthodox Islamic school of jurisprudence. **3** refrain (of a song). **4** creed, religion.
مدهب *madhab* /n pl *madaahib*/ creed, religion (in contexts of abuse only). *yiḥraq madhab-ak* ≈ damn you! ‖ *miʃ ɛaarif madhab ik-kalb^{i} da gaa-na mneen* heaven knows where that bastard came from! - *ʈallaɛ madahib-ha* ≈ he gave her a rough time.

^{2} ز ه ب see ^{2} د ه ب : *zahabi, tazhiib*

ز ه د
زهد *zihid, zahad (a)* /vt/ to lose interest in, be indifferent to. *ʃilli timlik-u l-ʃiid tizhad-u n-nafs [prov]* ≈ what the hand obtains the heart disdains. - vn *zuhd, zahadaan*; ava *zaahid*.
زهد *zuhd* /n/ renunciation (of the world), abstemiousness, asceticism. *ʃiz-zuhd^{i} yiḍman lil-ɛabd iṭ-ṭariiq lis-saɛaada l-ʃabadiyya* renunciation (of worldly temptations) guarantees man the way to eternal happiness.
زاهد *zaahid* /n * and pl *zuhhaad*/ abstemious person, ascetic. *ʃid-dinya f-naẓar iz-zaahid ma-tistahil-ʃ ig-gary^{i}*

waraaha in the opinion of the ascetic worldly comfort is not worth bothering about.

زهيد *zahiid* /adj/ little, small, low (of price), insignificant.

أزهد ʔ*azhad* /el/ **1** more/most abstemious. **2** more/most insignificant.

زهّد *zahhid* /vt/ to cause to lose interest. *nukran-ha lil-gimiil zahhid-ni fiiha* her ingratitude made me go off her. - vn *tazhiid*; ava/pva *mizahhid*.

اتزهّد ʔ*itzahhid* or ʔ*izzahhid* /vi/ to be made to lose interest. - iva *mitzahhid*.

استزهد ʔ*istazhid* /vt/ **1** to consider small, little or insignificant. **2** to feel indifferent. **3** to live a life of renunciation of worldly comfort. - ava *mistazhid*.

ز ه ر [1]

زهر *zahr*[1] /n/ **1** /coll/ blossom(s), flower(s). **2** (also *mayyit zahr*) orange-flower water.

زهرة *zahra*[1] /n, pl *zaharaat, zuhuur,* ʔ*azhaar*/ **1** /unit n/ a blossom, a flower. *zuhuur ḥawliyya [hort]* annuals. ‖*zahrit sigaara* the glowing end of a cigarette. - *zaharaat ik-kaʃʃaafa* Brownies, junior Girl Guides. - *maat fi-zahrit ʃabaab-u* he died in the flower of his youth. **2** motif in tent appliqué work (see Pl.H, 8).

زهراية *zahraaya* /unit n/ a blossom, a flower.

زهراء، زهرا *zahraaʔ*: /always def/ *faṭma z-zahraaʔ* epithet of Fatima, the daughter of the Prophet Muhammad.

زهريّة *zuhriyya* /n pl *-aat*/ flower-pot, vase.

الزهرة ʔ*iz-zuhara,* ʔ*iz-zuhra* /prop n/ the planet Venus.

زهرى *zuhari, zuhri* /n/ syphilis.

الأزهر ʔ*il-ʔazhar* /prop n/ el-Azhar. *gaamiɛ wi-gamɛit il-ʔazhar* el-Azhar Mosque and University.

أزهرى ʔ*azhari* **1** /adj/ pertaining to el-Azhar. **2** /n */ graduate of or student at el-Azhar, Azharite.

مزهر *mazhar* /n pl *mazaahir*/ broad shallow tambourine (without jingles).

مزاهرجى *mazahirgi* /n pl *-yya*/ player of the *mazhar*.

مازهر *mazahr* /n/ flower water.

زهّر *zahhar* /vi/ to put forth blossom. *ɛandina mawaaliḥ bi-tibtidi tzahhar* we have citrus trees which are beginning to blossom. - vn *tazhiir*; ava *mizahhar*.

ازدهر ʔ*izdahar*↑ /vi/ to prosper, flourish. ʔ*it-tigaara zdaharit* trade flourished. - vn ʔ*izdihaar*; ava *mizdihir, muzdahir*↑.

ز ه ر [2]

زهر *zahr*[2] /coll n/ blueing (for laundry).

زهرة *zahra*[2] /unit n, pl *-aat*/ blueing (for laundry).

زهرى *zahri* /adj/ light blue.

زهّر *zahhar*[2] /vt/ to blue. *bi-tiʃtuf il-ɣasiil wi-baɛdeen bi-tzahhar-u* she rinses the laundry and then blues it. - vn *tazhiir*; ava/pva *mizahhar*.

ز ه ر [3]

زهر *zahr*[3] /n/ pig iron, cast iron.

ز ه ر [4]

زهر *zahr*[4] <prob T *zar*> /n/ **1** /coll n/ dice. **2** pair of dice (in backgammon). ‖*maɛalehf' ya zahr* ≈ you can't always be lucky! win a few lose a few!

زهرة *zahra*[3] /unit n, pl *-aat*/ a die.

ز ه ز ه

زهزه *zahzah, zahzih* /vi/ to shine brightly. ʔ*il-ɋamar kaan mizahzah fis-sama* the moon was shining brightly in the sky. ‖ʔ*id-dinya zahzahit-lu* life became rosy for him. - vn *zahzaha, tizahziih*; ava *mizahzah, mizahzih*.

ز ه ق

زهق *zihiq, zuhuq (a)* /vi/ to become fed up. *zihiqt' min ig-ɡawaaz wi-ɋaraf ig-gawaaz* I've had enough of the whole disgusting business of marriage. - vn *zahaq, zahaqaan*.

زهقان *zahqaan* /adj */ fed up, bored, exasperated, annoyed.

أزهق ʔ*azhaq* /el/ more/most bored, exasperated, etc.

زهّق *zahhaq* /vt/ to cause to be fed up, exasperate. *bi-tfaaṣil li-ɣaayit ma tzahhaq il-bayyaaɛ* she haggles to the point of exasperating the vendor. - vn *tazhiiq*; ava/pva *mizahhaq*.

اتزهّق ʔ*itzahhaq* or ʔ*izzahhaq* /vi/ to be made exasperated. - iva *mitzahhaq*.

ز ه ل

ذهل *zahal (i)* /vt/ to shock, astonish, bewilder, astound. *manẓar yizhil il-ɛuquul* an amazing sight. - /the literary passive perfect frequently occurs/ ʔ*ana zuhilt' mil-manẓar* I was stunned by the sight. - vn *zuhuul*; ava *zaahil*; pva *mazhuul*.

انذهل ʔ*inzahal* /vi/ to be distracted, be bewildered, be amazed. - iva *minzihil*.

اتذهل ʔ*itzahal* or ʔ*izzahal* = ʔ*inzahal*. - iva *mitzihil*.

ز ه م

زهمة *zahama* /n/ **1** stink, stench. **2** frightening atmosphere. ʔ*il-gabbaana bil-leel kaan ɛaleeha zahama* the cemetery in the dark of the night had a horrifying atmosphere about it. - also *zaxama*.

زهامة *zahaama* = *zahama*. - also *zaxaama*.

ز ه ن
ذهن *zihn* /n pl ʕazhaan/ mind, brain. *ʕaayiz yinaffaṭ zihn iṭ-ṭaalib* he wants to stimulate the student's mind. ذهني *zihni, zuhni* /adj/ mental. *maghuud zihni* mental effort.

ز ه و
زهوة *zahwa↑* /n/ **1** brightness (of colour). **2** zenith, height. *ʕumm' kalsuum maatit wi-hiyya f-zahwit ʃuhrit-ha* Umm Kulthum died at the height of her fame.
زاهي *zaahi* /adj/ vivid, bright. *ʕalwaan zahya* bright colours.
أزهى *ʕazha* /el/ brighter/brightest.

ز و
ذو *zu* /nominal, fem (and also masc in unelevated speech) *zaat*, pl *zawi, zawaat↑*; always in constr/ possessor of. *raagil zu ʕahammiyya* an important man. *mas ʕala mif zaat ʕahammiyya* an unimportant matter. *zawi l-ʕamlaak* property owners. *ḥayawanaat zawaat il-ʕarbaʕ* quadrupeds. *ʕinta mif zaat ʕahammiyya ʕandi↓* you're of no importance to me. ‖*zu l-qiʕda* eleventh month of the Muslim year. - *zu l-ḥigga* twelfth month of the Muslim year. see further under ذات
ذي *zii: kullu zii ʕaahatin gabbaar [prov]* every person with a physical defect has a cruel streak.

ز و ا ت see ذ ا ت: *zawaat, zawaati*

ز و ب see ¹د و ب: *muziib, muzaab*

ز و ب ع see ز ب ع: *zawbaʕa*

ز و ت ن see also ز ي ت
زوتن *zootan* /vi/ to turn rancid. - ava *mizootan*.

ز و ج see also ²ج و ز
زوج *zoog↑* /n pl ʕazwaag/ husband.
زوجة *zooga* /n pl zawgaat/ wife. ‖*taʕaddud iz-zawgaat* polygamy.
زوجي *zawgi* /adj/ **1a** even (of numbers). **1b** pertaining to doubles (in games). *(ʕil-)xaṭṭ iz-zawgi* doubles line (e.g., of a tennis court). **2** marital. *xilafaat zawgiyya* marital disputes.
زوجيّة *zawgiyya* /n/ the state of marriage, matrimony. *beet iz-zawgiyya* marital home.
زيجة *ziiga* /n/ marrying, marriage. *sirr iz-ziiga [Chr]* the sacrament of marriage.
زواج *zawaag* /n/ marriage.
مزواج *mizwaag* /adj invar/ frequently marrying.

زوّج *zawwag* /vt/ to effect the marriage of (s.o.) (to). - ava/iva *mizawwig*.
اتزوّج *ʕitzawwig* or *ʕizzawwig* **1** /vt/ to marry, wed. **2** /vi/ to get married. - ava *mitzawwig*.
مزدوج *muzdawag↑* /adj/ **1** double(d). **2** duplicate. *ʕiṣaal muzdawag* duplicate receipt.

ز و ح see ز ي ح: *zooḥa*

¹ز و د
زاد *zaad'* /n/ food, provisions. *ʕaṭaʕit iz-zaad* she gave up eating. ‖ *ʕiz-zaad wiz-ziwwaad* (or *zuwwaad*) all provisions, as in *xallaṣ ʕaz-zaad wiz-zuwwaad* he finished off everything.
زوّاد *ziwwaad, zuwwaad: ʕiz-zaad wiz-ziwwaad* see *zaad'*.
زوّادة *zuwwaada, ziwwaada* /n/ provisions taken on long trips (by, e.g., pilgrims to Mecca).
زوّد *zawwid'* /vt/ to supply, furnish, provide. - vn *tazwiid*; ava/pva *mizawwid, mizawwad*.
اتزوّد *ʕitzawwid* or *ʕizzawwid* /vi/ **1** to provision oneself. **2** to be provided, be supplied (with s.th.). - ava/iva *mitzawwid*.

²ز و د see ز ي د: *ziwaada, zawwid²*

¹ز و ر
زار *zaar² (u)* **1** /vt/ to visit. *ya baxt' min zaar wi-xaffif [prov]* blessed is he who keeps his visits short! **2** /vi/ to visit the tomb of the Prophet (at Medina). - vn *ziyaara*; ava *zaayir*.
زيارة *ziyaara* /n pl -aat/ **1** visit. **2** food brought by visitors for their host.
زاير *zaayir* /n * and pl *zuwwaar*/ visitor.
انزار *ʕinzaar'* /vi/ to be visited. - iva *minzaar*.
اتزار *ʕitzaar* or *ʕizzaar* = *ʕinzaar'*. - iva *mitzaar*.
زوّر *zawwar'* /vt/ to show (visitors) round. - vn *tazwiir*; ava *mizawwar*.
اتزوّر *ʕitzawwar'* or *ʕizzawwar'* /vi/ to be shown round (of visitors). - iva *mitzawwar*.
اتزاور *ʕitzaawar* or *ʕizzaawar* /vi/ to exchange visits. *baṭṭalu yitzawru maʕa baʕḍ* they stopped visiting each other. - vn *tazaawur*; ava *mitzaawir*.

²ز و ر
زور *ziwir (a)* /vi/ **1** to choke (on something caught in the throat). *ʕilli yaakul li-waḥd-u yizwar [prov]* who eats alone chokes. **2** to backfire (of a welder's torch). - vn *zawaraan*.
زور *zawar (i)* /vt/ to cause to choke (on s.th. caught in

the throat). *luqma kbiira mil-ɛeef zawarit-u* a big piece of bread has choked him. - vn *zawar, zawaraan*; ava *zaawir*; pva *mazwuur*.

زور *zoor* /n pl *zuwaar, ʃizwaar/* **1a** throat. ‖*ħaaga mashʾ zoor* a mere nothing, a little bite, just a trifle to keep your appetite at bay (of food). - *ɛalee zoor yiblaɛ iṭ-ṭoor* he is a glutton. - *ma-b-yinzil-fʾ min zoor-i* (or, more emphatically, *ma-b-yinzil-lii-f min zoor*) I can't stand him, I can't stomach him. - *ma-ɛanduu-f ʏeer ɛayyil bi-zoor-u* he only has one child (to feed). **1b** *[butcher]* windpipe and lungs. **2** any of a range of throat-shaped parts (as a piston-casing, narrow part of a tubular drum, connecting-pipe etc.).

زوران *zawraan* /adj */ choking (on s.th. caught in the throat). ‖*geeb-u zawraan* he's very rich.

ازور *ʃitzawar* or *ʃizzawar* /vi/ to be made to choke. - iva *mitziwir*.

ز و ر ³

زور *zuur* /n/ falsehood. *ʃihaada zuur* false testimony, perjury.

¶ *biz-zuur* (1) by force, as in *wakkiluu-ni biz-zuur* they forced me to eat. (2) with difficulty, as in *ħagaz li-nafs-u tazkara biz-zuur* he could hardly book himself a ticket.

زوّر *zawwar*[2] /vt/ to counterfeit (paper money, documents etc.). - vn *tazwiir*; ava/pva *mizawwar, muzawwar*.

مزوّر *muzawwir* /n */ forger, counterfeiter.

مزوّراتي *mizawwaraati, muzawwaraati* /n pl *-yya/* forger.

اتزوّر *ʃitzawwar*[2] or *ʃizzawwar*[2] /vi/ to be counterfeited *ʃil-ʃimḍa tzawwarit bi-ʃiid waaħid ħarriif* the signature has been forged by the hand of an expert. - iva *mitzawwar*.

ز و ر ق

زورق *zooraq*[↑] /n pl *zawaariq/* small boat. *zooraq ṭurbiid* torpedo boat. *zooraq sibaaq* racing boat (as, e.g., an eight, a scull).

ز و ع

زوعة *zooɛa, zuuɛa* /adj invar/ weak, submissive. *ṣaħiiħ ṭuul wi-ɛarḍ' laakin raagil zooɛa* true he's a gigantic man but it's easy to push him around.

ز و غ

زاغ *zaaʏ (u)* /vi/ to slip away, escape unnoticed. *ħawilt azuuʏ minhum* I tried to give them the slip. ‖*ɛeen-u zayʏa* he has a roving eye. - vn *zawaʏaan*; ava *zaayiʏ*.

زوّغ *zawwaʏ* /vi/ to absent oneself without permission, play truant. *huwwa ʃaħyaanan bi-yzawwaʏ miʃ-fuʏl* sometimes he plays hookey from work. ‖*ma-tzawwaʏ-fʾ min il-mawḍuuɛ* don't try to evade the subject. - vn *tazwiiʏ*; ava *mizawwaʏ*.

مزوّغاتي *mizawwaʏaati* /n pl *-yya/* truant.

ز و ف ¹

زاف *zaaf (u)* /vt/ to push away, remove. *zafit-u bɛiid* she pushed him away. *zaaf-u guwwa* he pushed him inside. ‖*biz-zoof* plentiful, in great quantity. - *ħoof zoof* hastily, without delay, as in *xad-ni ħoof zoof min ʏeer ma yis ʃal-ni* he hustled me off without even asking me. - vn *zoof, zawafaan*; ava *zaayif*.

زوفة *zoofa* /unit n, pl *-aat/* (a single) push.

¶ *biz-zoofa* plentiful, in great quantity. *ʃin-naas kaanit biz-zoofa* people were (present) in great numbers.

ازاف *ʃitzaaf* or *ʃizzaaf* /vi/ to be pushed away, be removed. - iva *mitzaaf*.

انزاف *ʃinzaaf* = *ʃitzaaf*. - iva *minzaaf*.

(ز و ف)²

زوف *zoof*[1] /n/ *[rur]* roots and stalks of wheat collected for fuel after harvesting. ‖*zoof il-balad* the scum of the town.

زوف *zoof*[2] /n/ *[bot]* hyssop.

ز و ق ¹

زواق *ziwaaq* /n/ **1** making up, putting on cosmetics. **2** make-up, cosmetics.

زوّق *zawwaq* /vt/ **1** to decorate, ornament. **2** to make up with cosmetics. - vn *tazwiiq*; ava/pva *mizawwaq*.

اتزوّق *ʃitzawwaq* or *ʃizzawwaq* /vi/ **1** to be decorated, be ornamented. *maraakib mitzawwaqa b-ʃaɛlaam* boats decorated with flags. **2** to wear make-up. *ʃil-bintʾ kaanit mizzawwaqa ɛala singit ɛafara* the girl was made-up to kill. - ava/iva *mitzawwaq*.

ز و ق ² see also د و ق ¹

ذوق *zooq* /n pl *ʃazwaaq/* **1** taste, discrimination. *zooq gamiil* good taste. *zooq-u baladi* he has uncultivated down-to-earth taste. *bintᵃ ɛala zooq-i* a girl to my taste. *ʃin-naas ʃazwaaq* everyone to his own taste. ‖*ʃumm iz-zooq* epithet of Cairo. **2** tact, manners. *ħawilt ʃaxud-ha biz-zooq* I tried to take it politely. ‖*xalli ɛandak zooq* have some consideration! - *kull-ak zooq* (1) ≈ you're too kind (said on receiving a compliment). (2) *[sarc]* what beautiful manners! (said to one using abusive language). - *kull-ak zooq wi-ħinniyya* ≈ thank you (said on receiving a favour).

ذوقيّة *zawqiyya* /n pl *-aat/ = zooq. min baab iz-zawqiyya kaan laazim nizuur-u* for the sake of decency we should have visited him.
ذوقيًا *zawqiyyan* /adv/ as a matter of consideration or decency.
أذوق *ʔazwaq* /el/ **1** more/most elegant or tasteful. **2** more/most polite.
تذوّق *tazawwuq*↑ /n/ (artistic) appreciation.
استذوق *ʔistazwaq* /vi/ to behave politely. -vn *ʔistizwaaq*; ava *mistazwaq*.

ز و ك
زوك *zuuk* /n/ stifle (of a horse).

ز و ل [1]
زال *zaal*[1] *(u)* /vi/ to cease. *ʔin-niʕma zaalit min wiff-u* God's grace has left him. ‖*zawaal ya dunya* ≈ ashes to ashes. -vn *zawaal, zawalaan*; ava *zaayil*.
زال *zaal*[2] *(i)* /vt/ to remove. -vn *zayalaan*; ava *zaayil*.
زوال *zawaal* /n/ **1** noon. *baʕd iz-zawaal* afternoon. ‖*xaṭṭ iz-zawaal* meridian. **2** shadow (of a person). *ʔana ʃaayif zawaal bi-yiṯarrak fiḍ-ḍalma* I see something moving the dark.
مزولة *mazwala* /n pl *mazaawil*/ sundial.
زاول *zaawil* /vt/ to practise (a profession), pursue (an interest). *bil-muzawla* by practice. *tarxiiṣ muzawlit il-mihna* licence to practise the profession. -vn *muzawla, mizawla*; ava *mizaawil*.
أزال *ʔazaal* = *zaal*[2]. -vn *ʔizaala*; ava *muziil*.
مزيل *muziil* /n pl *-aat/* remover. *muziil (liṣ-ṣada)* rust remover.

ز و ل [2]
زويلة *zuweela: baab zuweela* /prop n/ Bab Zuweila, an old city gate in Cairo.

ز و م
زام *zaam (u)* /vi/ **1** to growl. **2** to utter a mating call (of a male pigeon). -vn *zawamaan, zoom*; ava *zaayim*.

ز و ن see ز و و ا ن: *zawwaana*

ز و و ا ن
زوّانة *zawwaana* <poss T *zıvana* from P> /n pl *-aat/* compass saw.

ز و ى [1]
زوى *zawa (i)* /vt/ **1** to shape into the form of an angle. ‖*zawa ḥawagb-u* he frowned. - *ʔil-ʕiyaal zawyiin-u* the children are harassing him. **2** to put out of sight, hide away. **3** *[text]* to double. -vn *zawy, zawayaan*; ava *zaawi*; pva *mazwi*.
زاوية *zawya* /n pl *-aat, zawaaya, ziwy, ziway*↓/ **1a** angle. *zawya ḥadda* acute angle. *zawya ʔayma* right angle. *zawya munfariga* obtuse angle. **1 b**↑ aspect. *zawaaya l-baḥs* aspects of the study. **2** a small mosque (without a minaret). – /pl *ziwy* only/ **3** *[carp, eng]* try square. *zawyit kustilla* mitre square.
انزوى *ʔitzawa* or *ʔizzawa* /vi/ **1** to be formed into an angle. **2** to be put out of sight, be hidden away. **3** *[text]* to be doubled. -iva *mitziwi*.
انزوى *ʔinzawa* = *ʔitzawa*. -iva *minziwi*.

ز و ى [2] see ز و: *zawi*

ز ى see ز و: *zii*

ز ى ا ك ن see د ى ا ك ن: *ziyaakun*

ز ى ب see د و ب [1]: *muziib, muzaab*

ز ى ب ق
زيبق، زئبق *zeebaq* /n/ mercury, quicksilver.

ز ى ت
زيت *zeet* /n pl *zuyuut, ziyuut*/ oil. *zeet ʃaʕr* hair-oil. *ziyuut taʃḥiim* lubricating oils. *zeet bizra* cotton-seed oil. *ʔil-ʔassiis bi-yimsaḥ il-mariiḍ biz-zeet il-muʔaddas* the priest anoints the sick man with consecrated oil. ‖*ḥaʃiif zeet* pure hashiish. -*zeet ḥaar* linseed oil. -*zeet ṭayyib* olive oil. - *ʔil-baḥr*[i] *zayy iz-zeet* the sea is totally calm. -*zet-hum fi-dʔiʔhum* in the family, as in *gawwiznaa-ha li-bn*[a] *ʕamm-a-ha w-baʔa zet-na f-diʔiʔ-na* we gave her in marriage to her cousin and it all stayed in the family.
زيتي *zeeti* /adj */ oil-coloured, dark green.
الزيتيّة *ʔiz-zetiyya* /prop n/ an industrial region near Suez famous for its oil refineries.
زيّات *zayyaat* /n */ *[obsol]* food-oil merchant.
مزيتة *mazyata* /n pl *mazaayit*/ oil-can, oiler.
زيتون *zatuun* /coll n/ **1** olive tree(s). **2** olive(s). see further under ز و ت ن
الزيتون *ʔiz-zatuun* /prop n/ district in north-eastern Cairo.
زيتونة *zatuuna* /unit n, pl *-aat/* **1** an olive tree. **2** an olive.
زيتونية *zatuunaaya* = *zatuuna*.
زيتوني *zatuuni* /adj invar/ olive-green in colour.
زيّت *zayyit* **1** /vt/ to oil, apply oil to, render oily. **2** /vi/ to become oily, become covered with oil. -vn *tazyiit*; ava/pva *mizayyit*.

اتزيّت ʃitzayyit or ʃizzayyit /vi/ to be oiled, be covered with oil. -iva *mitzayyit*.

ز ي ت و ن see ز ي ت

ز ي ح

زاح *zaaḥ (i)* /vt/ **1** to shift, displace. *ziiḥ ik-kursi ʃwayya* move the chair away a bit! *zaaḥ ɤamm-u* it dispelled his gloom. *ziḥt[a] ɛaleehum if-fuɤl* I shifted the work on to them. **2** *[slang]* to gobble up, polish off. *yiziiḥ kull-u* he wolfs down everything (you give him). -vn *zeeḥ, zayaḥaan*; ava *zaayiḥ*.

زيحة *zeeḥa* /inst n/ a displacement. ‖*gat-ak zeeḥa* go to hell!

زوحة *zooḥa = zeeḥa*.

اتزاح ʃitzaaḥ or ʃizzaaḥ /vt/ **1** to be shifted, be displaced. ʃ*ahi balwa wi-tzaaḥit* ≈ that's a weight off my shoulders! **2** *[slang]* to be gobbled up, be polished off. -iva *mitzaaḥ*.

انزاح *ʃinzaaḥ = ʃitzaaḥ*. -iva *minzaaḥ*.

أزاح ʃazaaḥ[↑] = *zaaḥ*. -vn ʃ*izaaḥa*.

ز ي د

زاد *zaad[2] (i)* /vi/ **1** to increase, grow. *zidt' sabɛa kiilu* I put on seven kilos in weight. *ɛadad is-sukkaan bi-yziid kull' sana* the population increases every year. *takaliif il-ḥayaah zaadit ɋawi* the cost of living increased greatly. *ḥubb-u liiha bi-yziid maɛa l-ʃayyaam* his love for her grows as time passes. ‖*zaad* or *(faaḍ) wi-ɤaṭṭa* (1) to suffice amply, as in *ʃil-akl' zaad wi-ɤaṭṭa* the food was more than enough. (2) to increase out of all bounds, as in *ʃilli zaad wi-ɤaṭṭa l-yomeen dool ṣanɛit ig-gizam il-ḥariimi* what has really expanded and taken over recently is the women's shoe trade. **2** to go beyond. *maṣruuf-u ma-kan-ʃ' yziid ɛan gineeh fiʃ-ʃahr* his pocket-money allowance never exceeded one pound a month. ʃ*is-sigaara ma-tzid-ʃ' ɛan waraɋa titḥiriɋ* a cigarette is nothing more than a piece of paper that burns. ʃ*il-ɛeela hiyya g-gawaaz wi-lli yziid ɛalee min xilfa* a family equals marriage plus whatever children may come. ‖ ʃ*il-ḥikaaya zayda ɛan ḥadd-a-ha* this thing is going too far. ʃ*illi yziid ɛan ḥadd-u yinɋilib li-ɋidd-u [prov]* ≈ whatever goes to extremes becomes counterproductive. — /vt/ **3** to add to. *rabb-i-na yziid-ak min naɛiim-u* may Our Lord add unto you of His blessings! *ziid in-nabi ṣala* bless the Prophet once more! say (the phrase) *ɛaleeh iṣ-ṣalaatu was-salaam* again! *min zaad-ak ziid-u w-xalli wlaad-ak ɛabiid-u [prov]* whoever has been a benefactor for you, be a benefactor to him, and make your children his slaves. -vn *ziyaada*; ava *zaayid*.

زيادة *ziyaada* /n pl *-aat*/ **1a** increase. *niɛmil taḥliil liz-ziyaada fil-ʃintaag* we analyse the increase in production. *la zyaada wala nuɋṣaan* no more, no less. **1b** rise, increment. *kull-u-hum mistanniyyiin ziyaada f-murattabat-hum* they are all expecting a rise in their salaries. **2** excess, surplus. *niʃiil iz-ziyadaat illi ṭilɛit* we remove the superfluities which have emerged. *fii malliim ziyaada* there's an extra millime. *biʃ-ʃakl' da bi-yɛawwaɋ daxl-u wi-zyaada kamaan* in this way, he does more than make up for his income. ‖*ɋahwa (sukkar) ziyaada* extra-sweet coffee. -*ziyaada ɛan* in excess of, as in *tixiin ziyaada ɛan il-luzuum* too thick. ¶ *bi-zyaada* enough. *bi-zyaada kida* that's enough! *bi-zyaada kalaam* (that's) enough talking! *bi-zyaada ɛaleeha ɋillit il-ḥaya btaɛit-ha di* she's shameless enough as it is.

زايد *zaayid[1]* /adj */ excessive, beyond what is desirable or right. *miʃ ɋaadir* ʃ*alabbi kull' ṭalabaat-ik iz-zayda di* I cannot satisfy all these excessive demands of yours. ʃ*iz-zaayid* ʃ*axu n-naaɋiṣ [prov]* ≈ too much is as bad as too little.

زائد *zaaʃid* /prep/ plus, in addition to. ʃ*il-murattab zaaʃid il-badalaat* the salary plus allowances.

¶ *zaaʃid ʃinn* /conj/ in addition to the fact that.

زائدة *zayda* /n pl *zawaayid*/ (unwanted) protuberance, outgrowth, unevenness. ‖ ʃ*iz-zayda (d-dudiyya) [anat]* the (vermiform) appendix.

أزيد ʃazyad /el/ more/most. ʃ*il-wagaɛ bi-yibɋa* ʃazyad *fil-ʃawwil* the pain is greater at first. ʃ*ana ɛumr-i ma-biɛt' b-*ʃazyad *mit-tasɛiira* I have never sold anything for more than the fixed price.

زيد *zeed* /prop n/ male given name. ‖*zeed wi-ɛbeed* this and that, as in *kunt' miʃ ɛaarif* ʃ*anaam wi-b-afakkar fi-zeed wi-ɛibeed* I could not get to sleep and I kept thinking of this and that.

¶ ʃ*abu zeed il-hilaali* a warrior hero of folk epic. *ka-*ʃ*innak ya-bu zeed ma-ɤazeet [prov]* (as though, O Abu Zayd, you had not campaigned) ≈ we might as well not have bothered, our efforts came to nothing. *sikkit* ʃ*abu zeed kull-a-ha masaalik [prov]* (Abu Zayd's way is all clear paths) ≈ you can't keep a good man down.

زوادة *ziwaada* /n pl *-aat*/ **1** increment, rise (in salary). *baɋaa-li sanateen min ɤeer ziwaada* I've been two years without a rise. **2** excess, what is over and above the required amount. *ṭab da ḥaɋɋ-i mazbuuṭ feen baɋa z-ziwaada* ≈ this is my rightful share, but what about that extra (you used to offer me)?

مزاد *mazaad* /n pl *-aat*/ auction. *baaɛit kull[a] ɛaff-a-ha bil-mazaad* she sold off all her furniture by auction.

زوّد *zawwid*[2] /vt/ **1** to augment, increase. *nizawwid il-ʕarḍ[i] mayya* we give the land more water. ‖*raayiḥ ʕazawwid il-ɛagala* I'm going to get the tyre (more) inflated. - *ʕiẓ-ẓaahir ʕinni zawwidt-a-ha ḥabbiteen* it seems that I overdid things a bit. **2** to add. *bi-tiṭbux il-firaax wi-bi-tzawwid ɛaleehum malḥ* she cooks the chickens and (then) adds salt to them. - vn *tazwiid*; ava *mizawwid*.

زايد *zaayid*[2] /vi/ to bid (in an auction). *ʕil-mizayda ɛas-samak* bidding for fish. - vn *mizayda*; ava *mizaayid*.

مزايدة *mizayda, muzayda*↑ /n pl *-aat*/ auction.

مزايد *muzaayid*↑ /n */ bidder, outbidder.

ازايد *ʕitzaayid* or *ʕizzaayid* /vi/ to take part in an auction. - ava *mitzaayid*.

ازداد *ʕizdaad* /vi/ to increase. *ʕil-xuṭuura ẓdaadit* the danger increased. *ʕil-ʕaɛraaḍ bi-tizdaad* the symptoms are becoming more pronounced. - vn *ʕizdiyaad*; ava *mizdaad*.

استزاد *ʕistazaad (yistaziid, yistazaad*↓*)* /vt/ to ask for more of, look for more of. *niḥibb[i] nistaziid maɛlumaat* we like to get more information. - vn *ʕistizaada*; ava *mustaziid*↑.

ز ى ر [1]

زيّار *zayyaar* /n/ *[naut]* rope attaching the rear end of the tiller to the rudder.

زيّر *zayyar* /vt/ to fasten, attach. - vn *tazyiir*; ava *mizayyar*.

تزييرة *tazyiira* /n pl *-aat, tazayiir/ [obsol]* a black robe formerly worn by middle-class women.

مزيّرة *mizayyara* /prop n/ evil spirit believed to appear in the form of a woman clad in white garb.

اتزيّر *ʕitzayyar* or *ʕizzayyar* /vi/ to put on a *tazyiira*. - ava *mitzayyara*.

ز ى ر [2]

زير *ziir*[1] /n pl *ʕazyaar, ziyaar*/ large handle-less earthenware jar used for storing and filtering water. (see Pl.A, 7). ‖*ʕaadi z-ziir wi-ʕaadi ɤaṭaa* (here is the *ziir* and here is its cover (part of a children's rhyme)) ≈ here is what clinches it! (in presenting proof). - *dawwar iz-ziir ɛala ɤaṭaa lamma ltaqaa* ≈ he met his match. - *kasar ziir waraa* ≈ he said good riddance to him.

مزيرة *mazyara* /n pl *mazaayir*/ cupboard-like stand on which a *ziir* is placed.

ز ى ر [3]

زير *ziir*[2]*: ʕiz-ziir saalim* /prop n/ a hero of popular epic.

ز ى ر [4]

see ز و ر [1]: *ziyaara*

ز ى ر ج

زايرجة *zayirga* <poss P *zâycha*> /n/ table of random letters used in divination. - also *yazirga*.

ز ى ط

زاط *zaaṭ (i)* /vi/ **1** to become uproarious. *ʕil-muẓahra zaaṭit* the demonstration broke into pandemonium. ‖*ʕil-ḥikaaya zaaṭit* the affair got out of hand. **2** to become joyful. - vn *zeeṭa*; ava *zaayiṭ*.

زيطة *zeeṭa* /n/ clamour, uproar. *zeeṭa w-zambaliiṭa* brouhaha. *bi-yiɛmil zeeṭa ɛal-ḥagaat il-ḥayfa* he makes a fuss about trivial things.

زيّط *zayyaṭ* /vi/ to indulge in noisy merriment, make a joyous commotion. - vn *tazyiiṭ*; ava *mizayyaṭ*.

ز ى ع

ذاع *zaaɛ (i)* **1** /vt/ to broadcast, send out, spread abroad (especially by radio or television). *ma-tziɛ-ʃ il-xabar* don't spread the news. **2** /vi/ to become known, be spread abroad. *ṣiiṭ-u zaaɛ* its fame spread. - vn *zayɛaan*; ava *zaayiɛ*.

اتذاع *ʕitzaaɛ* or *ʕizzaaɛ* /vi/ to be broadcast (by radio). - iva *mitzaaɛ*.

انذاع *ʕinzaaɛ* = *ʕitzaaɛ*. - iva *minzaaɛ*.

أذاع *ʕazaaɛ* /vt/ to broadcast (by radio). *maḥaṭṭit ʕizaaɛa* broadcasting station. - vn *ʕizaaɛa*; ava *muziiɛ*; pva *muzaaɛ*.

إذاعة *ʕizaaɛa* /n pl *-aat*/ radio broadcast. ‖*fil-ʕizaaɛa* on the radio.

مذيع *muziiɛ* /n */ announcer, broadcaster.

ز ى ف

زيف *zeef* /n/ affectation.

زيّف *zayyif* /vt/ to counterfeit, forge (particularly money). - vn *tazyiif*; ava *mizayyif*; pva *muzayyaf*.

مزيّف *muzayyif* /n */ forger.

اتزيّف *ʕitzayyif* or *ʕizzayyif* /vi/ to be forged (of money in particular). - iva *mitzayyif*.

ز ى ق [1]

زيّق *zayyaq*[1] /vi/ to creak. *baab mizayyaq* a creaking door. *sidr-u bi-yzayyaq* his chest wheezes. - vn *tazyiiq*; ava *mizayyaq*.

ز ى ق [2]

زيق *ziiq* /n pl *-aat*/ **1** edge, border. **2** strip.

زيّق *zayyaq*[2] /vt/ to make an edge or border around (s.th.). - vn *tazyiiq*; ava/pva *mizayyaq*.

اتزيّق ʕitzayyaq or ʕizzayaq /vi/ to be given an edging or border. - iva *mitzayyaq*.

زيل see زول: *muziil*

زين[1]
زان *zaan*[2] *(i)* /vt/ to adorn (with one's presence). *ʕinta zint il-beet* your presence has adorned the house, your visit is an honour. ‖*hiyya tziin-u w-huwwa yzin-ha* they are each as bad as the other, they're a good match. - vn *zayanaan*; ava *zaayin*.
زين *zeen*[1] /adj/ **1** good. *kalaam zeen* sound words. *ya zeen iz-zeen* you best of men! *ʕiz-zeen wif-feen* the good and the bad. — /adverbially/ *nibayyin zeen* we read the future well (a gypsy catchword). ‖*ṣalli ɛaz-zeen* bless the Prophet! **2** pretty, handsome.
زينهم *zen-hum* /prop n/ poor district in southern Cairo on the northern edge of Fustat.
زينة *ziina* /n pl *-aat, ziyan*/ decoration, ornamentation. *ʕil-ɛaql' ziina* wisdom is an adornment. *lumaq ziina* fairy lights.
زيانة *ziyaana* /n/ barbering, the barber's trade. *ʕitɛallim iz-ziyaana f-ruus il-yataama [prov]* (he learnt to barber on the heads of orphans) ≈ the defenceless make the best guinea-pigs.
زيّن *zayyin* /vt/ **1** to adorn, decorate. *bi-yzayyinu l-midan bi-lumaq ɛafaan il-muulid* they decorate the minarets with lights for the *muulid*. **2** *[rur]* to cut the hair of (s.o.). - vn *tazyiin*; ava/pva *mizayyin*.
مزيّن *mizayyin* **1** /n */ barber, hairdresser for men. *ʕabrad min il-mizayyiniin [prov]* bolder than a barber, cheekier than a barber. *zayy il-mizayyin yidḥak ɛal-ʕaṣlaɛ bi-ṭaqṭaqit il-maqaṣṣ [prov]* like the barber, he fools the bald with the clicking of the scissors (i.e. he deceives him by pretending to go along with him). **2** /adj */ cheeky, bold.
اتزيّن ʕitzayyin or ʕizzayyin /vi/ **1** to be adorned, be decorated. **2** to be cut (of hair). - iva *mitzayyin*.

زين[2]
زين *zeen*[2] /fem n, pl *-aat*/ eleventh letter of Arabic alphabet. - also *zaay, zeh*.

زينب
زينب *zeenab* /prop n/ female given name. *ʕis-sayyida zeenab* mosque and quarter in the southern part of central Cairo, named after the grand-daughter of the Prophet Muhammad.

زي see also ءززاى and ءززيى
زيّ *zayy* /prep/ **1** as, like. *ṭaɛm-a-ha zayy in-niɛnaaɛ* it tastes like mint. *zayy ayyaam zamaan* as in the old days. *zayy' ɛawayd-ak* as you usually do, as is your habit. *sitt' zayy' di* such a woman. ‖*zayy(-u) zayy* ... (it is) just like, (it is) equal to, as in *zayyu zayy il-ɋizaaz* it's just like glass, *zayyak zayy' ɣeer-ak* fair shares for all! **2** such as. *ʕasɛaar il-xuḍaar zayy il-bamya wil-bisilla wil-koosa rtafaɛit ɋawi* the prices of vegetables such as okra, green peas and zucchini have gone up a lot. *fii duwal ɋablit-ha l-muʃkila di ɋabliina zayy iṣ-ṣiin wil-hind* some countries, such as China and India, have encountered this problem before us. **3** about, something like, approximately. *zawwidi ɛalee zayy' sitt' beḍaat* add about six eggs to it. *ʕir-rusuum zayy' xamsa w-sabɛiin ɋirf* the dues are something like seventy-five piastres.
¶ *zayy' ma* /conj/ **1** as, just as, in the same way as. *win-nabi zayy' ma b-aɋuul kida* I swear it's exactly as I say. *ḫ-aɛmil zayy' ma-na ɛaayiz* I'll do as I please. *niɋdar nibiiɛ-u zayy' ma-ʃtarenaa* we can sell it for the same price we bought it for. ‖*bi-yɋuum biiha zayy' ma ykuun* he takes it on as circumstances permit. - *tifrab ʕeeh - zayy' ma ykuun* 'What'll you drink?' 'Just whatever's around.' **2** as if. *ʕid-duktoor bi-yɛaalig il-marḍa zayy' ma ykuunu wlaad-u* the doctor treats the patients as if they were his own children. *da zayy' ma ykuun fii taar benna* it is as though there were a feud between us.
زيّ *ziyy* /n pl *ʕazyaaʕ*/ uniform.
أزياء *ʕazyaaʕ* /pl n/ women's dresses, women's fashions. *ɛarḍ' ʕazyaaʕ* fashion show.
اتزيّى *ʕitzayya* or *ʕizzayya* /vi/ to dress oneself or be dressed. *ʕitzayya b-ziyy-u l-ɛaskari* he put on his military uniform. - ava/iva *mitzayyi*.

س

س ا ء
ساء *saaʔ*[1] /fem n, pl *-aat*/ fourth letter of the Arabic alphabet. - also *sih*.

س ا ج
ساج *saag: xaʃab saag* teak wood.

س ا ح
ساحة *saaḥa* /n pl *-aat*/ playground, recreation space, parade ground. ‖*saaḥa ʃaʕbiyya* government-sponsored youth club for military and sports training.

س ا د ا
سادة *saada* <P *sâda*> /adj invar/ plain, simple. *ʠumaaʃ saada* unpatterned cloth. *ʃaay saada* tea without milk. *ʠahwa saada* (Turkish) coffee without sugar. ‖ *ʃis-saada lis-saada [joc]* unsweetened coffee for gentlemen.

س ا ر ى
ساري *saari*[1] <Hindi> /n/ sari.

س ا س
ساس *saas: min is-saas lir-raas* from head to toe, from top to bottom.

س ا ع [1]
ساعة *saaʕa*[1] /n pl *-aat*/ **1a** hour. *b-aftaʏal bis-saaʕa* I work by the hour. **1b** hour of the day. *ʃis-saaʕa kaam* what time is it? *ʃis-saaʕa tnaaʃar* it is twelve o'clock. **2** time, period of time. *miin gayy is-saʕaa-di* who's coming at this hour? *fi-nafs is-saaʕa* at the same time. *mamnuuʕ it-tadxiin saaʕit iʃ-ʃuʏl* no smoking during working time. *saaʕa l-ʠalb-ak wi-saaʕa l-rabb-ak [prov]* (a time for yourself and a time for your Lord) ≈ (there is) a time for pleasure and a time for prayer. ‖*saʕt-u ʠarrabit* his hour is near, he is about to die. *-saaʕit il-ḥaẓẓ*[i] *ma-titʕawwaḍ-ʃ [prov]* you can never make up for lost pleasures. *-kull*[i] *saaʕa wit-tanya* very often, as in *hiyya kull*[i] *saaʕa wit-tanya tkallim-ni bit-tilifoon* she's always ringing me up! - *ʃibn*[i] *saʕt-u* man of whims. *-saʕit-ha* at the same time, as in *faakir lamma kunt*[i] *bi-tdawwar ʕalayya - saʕit-ha baʠa kunt*[i] *fil-maktab* remember the time you were looking for me? well, I was at the office then. *-fi-saʕit-ha* then and there, at once, as in *lamma ḥaṣalit il-ḥadsa f-saʕit-ha gih il-buliiṣ* when the accident occurred the police came at once. **3** timepiece, watch, clock. ‖*saaʕa tawʠitiyya* stop-watch.

¶ *saaʕit ma* /conj/ (1) when(ever), as in *saaʕit ma yṣaffar laha tiigi* when he whistles, she comes. (2) as soon as, the moment, as in *saaʕit ma yiwṣal ʃibʕat-u l-beet* as soon as he arrives send him home. *huwwa kida min saaʕit ma twalad* he's been like that since the moment he was born. *min saaʕit is-sawra ma ʠaamit* from the time the revolution took place.

ساعات *saʕaat* /adv/ sometimes. ‖*saʕaat kitiira* quite often.

ساعاتى *saʕaati* /n pl *-yya*/ watchmaker, watch-repairer.

سواعى *sawaaʕi* /adv/ sometimes.

[2] س ا ع see س ى ع : *saaʕa*[2]

س ا غ
صاغ *saaʏ*[1] <T *sağ*> **1** /adj invar/ *[obsol]* sound, unimpaired; current only in the expressions *saaʏ* (or *saaʏ) saliim* (1) A-1 (of health), (2) safe and sound, *ʠirf*[i] *saaʏ* one piastre, *ʠirfeen saaʏ* two piastres. **2** /n pl *saʏaat*/ piastre, piastre coin. *ʃiddii-ni saaʏ* give me a piastre! *ʕaʃara saaʏ* ten piastres.

س ا ق

ساق *saaq'* /n pl *siqaan, siqaan*/ **1** stem, talk (of a plant). **2** (human) leg, calf.

س ء ت ك ي

ثيوتكيّة *saʃutukiyya* <Gr *theotokia*> /n pl *-aat*/ *[Chr]* hymn to the Virgin Mary.

س ء ل

سأل *saʃal (a)* **1** /vt/ to question, ask. *ruuḥ ʃisʃal-u* go and ask him. *kunt' bidd-i ʃasʃal-ak ḥaaga* I wanted to ask you something. **2** /vi/ to make inquiries. *waaḥid kaan bi-yisʃal ɛaleek* (or *ɛannak*) someone was asking about you. - vn *suʃaal, suʃlaan*; ava *saaʃil*; pva *masʃuul*.

¶ *saʃal fi-* /usu in neg contexts/ to be concerned about. *ma-b-yisʃal-f' fiyya* he doesn't give a damn about me. *ʃihmil-u wala tisʃal fii* ignore him and don't bother about him at all.

سؤال *suʃaal* **1** /n/ begging. ‖*ḥumart-ak il-ɛarga wala suʃaal il-laʃiim [prov]* ≈ better to depend on your limited resources than to ask for the help of a mean man. **2** /n pl *ʃasʃila, suʃalaat*↓/ question, query. ‖*ʃil-gawaab ɛala qadd is-suʃaal* the answer should match the question (i.e. be brief, don't be longwinded).

سئيل *saʃiil* /adj pl *suʃala*/ **1** importunate. **2** cheeky. **3** thick-skinned.

سائل *saaʃil*[1↑] /n */ beggar.

مسؤول *masʃuul* /adj */ **1** responsible, accountable. *ʃana masʃuul ɛan il-ḥikaaya di* I am responsible for this matter. *ʃil-ɛanaaṣir il-masʃuula ɛan nagaḥ-ha* the factors responsible for its success. **2** responsible, in charge. *miin if-faxṣ il-masʃuul hina* who's the person in charge here? *ʃil-masʃuliin miʃ mafruuḍ yiddaxxalu f-kull' ṣ·ayyara wi-kbiira* the authorities shouldn't have to deal with all the petty details.

مسؤوليّة *masʃuliyya* /n pl *-aat*/ responsibility.

سؤل *suʃl↑* /n/ wish. *ʃaḥmid-ak ya rabb' nawwilt-i-ni suʃl-i* O Lord! praise be to Thee for fulfilling my wish.

مسألة *masʃala* /n pl *masaaʃil*/ **1** issue, question, matter. *ʃin-naṣr' masʃalit waqt* victory is a question of time. *laazim ninaaqiʃ il-masʃala di b-huduuʃ* we must discuss this matter quietly. **2** *[math]* problem.

اتسأل *ʃitsaʃal* or *ʃissaʃal* **1** /vi/ to be asked (of a question). *da s-suʃaal illi mafruuḍ yitsiʃil* that is the question that should be asked. **2** /vt/ to be asked (a question). *fil-igtimaaɛ ʃitsaʃal suʃaal muḥrig* in the meeting he was asked an embarrassing question. - iva *mitsiʃil*.

انسأل *ʃinsaʃal* = *ʃitsaʃal*. - iva *minsiʃil*.

ساءل *saaʃil*[2] /vt/ to question. *la tsaʃil-ni wala ʃasaʃl-ak* we shouldn't question each other. - vn *misaʃla, musaʃla*.

اتساءل *ʃitsaaʃil* or *ʃissaaʃil* /vi/ to wonder, ask oneself. *ʃana b-atsaaʃil ʃeeh illi ɛamalt-u fiik* I am at a loss to know what I have done against you. - ava *mitsaaʃil*.

س ء م

سئم *siʃim (a)* /vi/ to become weary, bored, or tired. *ʃana siʃimt' min ṭuul intiẓaar-u* I am fed up with waiting for him for so long. - vn *saʃam, saʃaama*.

سأم *saʃam (i)* /vt/ to bore, weary, make fed up. - ava *saaʃim*.

سآمة *saʃaama* /n/ tediousness.

سأمان *saʃmaan* /adj */ fed up, weary, tired, bored, exasperated.

اتسأم *ʃitsaʃam* or *ʃissaʃam* /vi/ **1** to be bored, be wearied, be made fed up. **2** (impersonal) passive of *siʃim. ma-yitsiʃim-ʃ' minnu* no one could be bored by him. - iva *mitsiʃim*.

س ب ا ط

سباطة *subaaṭa* <prob Copt> /n pl *-aat, sabaayiṭ*/ cluster, bunch (of dates or bananas). - also *ẓubaaṭa*.

س ب ا ن خ

سبانخ *sabaanix* <P *sipânâkh*> /n/ spinach.

س ب ب [1]

سبب *sabab* /n pl *ʃasbaab*/ cause, reason. *ʃid-diḥk min ɣeer sabab ɋillit ʃadab* to laugh without good reason is impolite. *bi-sabab* on account of, owing to.

سبّابة *sabbaaba* /n pl *-aat*/ index finger.

سبّوبة *sabbuuba* /n/ *[slang]* business of a peddler, goods carried by a peddler.

سبّيب *sabbiib* /n pl *sabiiba*/ *[slang]* peddler.

سبّب *sabbib* /vt/ to cause. *ʃis-surɛa bi-tsabbib muɛẓam il-ḥawaadis* speed causes most accidents. *rabb-i-na bi-ysabbib il-ʃasbaab [prov]* God creates causes (so that man can see an order in things, though God is not bound by cause and effect). - vn *tasbiib*; ava *misabbib*.

مسبّبات *musabbibaat* /pl n/ underlying factors. *ʃil-mawḍuuɛ luu ʃasbaab wi-msabbibaat kitiira* the matter is very complex.

اتسبّب *ʃitsabbib* or *ʃissabbib* /vi/ **1** to be the reason, be the cause. *ʃeeh illi tsabbib fil-ɛaya* what was the cause of the illness? **2** to be caused. *ʃil-ɛaya tsabbib ɛan il-ʃakl il-wisix* the illness was caused by dirty food. **3** to earn one's living (especially by hawking goods in the street). *daayir ṭuul in-nahaar yissabbib-lu fi-ʃwayyit xuḍaar* he

goes around all day hawking vegetables to make a living. - ava/iva *mitsabbib*.

متسبّب *mitsabbib* or *missabbib* /n */ one who trades on a very small scale, peddler.

س ب ب [2]

سبّ *sabb [1] (i)* **1** /vt/ to revile, abuse. *raaḥ sabib-li d-diin* he went and insulted my religion. ‖ *masbuuba fii* (she is) accused of committing adultery with him. **2** /vi/ to be abusive, be insulting. *huwwa-nta bi-tsibb[i] f-baaba kamaan* you dare to insult Father as well? ‖ *ʕin ʃuft-u bi-ysibb iʒraf ʕinnu bi-yḥibb [prov]* ≈ he must be in love to act so touchily. - vn *sabb*; ava *saabib*; pva *masbuub*.

سبّ *sabb[2]* /n/ defamation. ‖ *ʕis-sabb il-ʒalani [leg]* slander, defamation of character. - *qanuun is-sabb* libel law.

سبّة *subba* /n/ object of shame, disgrace or dishonour. *xallit-u subba ʠuddaam in-naas* she disgraced him in public. - /adjectivally/ *da raagil subba* the man's a disgrace!

مسبّة *masabba = sabb[2]*.

اتسبّ *ʕitsabb* or *ʕissabb* /vi/ to be abused, be reviled, be insulted. - iva *mitsabb*.

انسبّ *ʕinsabb = ʕitsabb*. - iva *minsabb*.

س ب ب و ت

سبّوتة *sabbuuta* <perh Sp *sapote*> /n/ **1** avocado tree. **2** avocado fruit.

س ب ت [1]

ثبت *sibit (a)* /vi/ **1a** to become immobile, stay in place. *ʕisbat fi-makaan-ak* stay where you are! **1b** to remain steadfast. *sibit fi-kalaam-u* he kept to what he said, he stood by his words. ‖ *ʕamlaak wi-ʕamwaal sabta [leg]* real estate, immovable property. - *fi-muntaha s-sabaat* as calm(ly) as can be. **2** to become set or fixed. *ʕil-buqʒa sibtit* the stain has set. *ʕalwaan sabta* fast colours. *ma-luu-ʃ raʕy[i] saabit* he has no fixed opinion. **3** to be proved. *ʕil-ʠaḍiyya sibtit ʒalee* the case was proved against him. - vn *subuut, sabaat, sabataan*; ava *saabit*.

ثبت *sabat[1] (i)* /vt/ **1** to prove. *ʕana mustaʒidd asbit kalaam-i* I'm ready to prove what I say. **2** to record, make a note of. *bi-yiddii-k waṣl[i] w-yisbit-u fid-daftar* he gives you a receipt and records it in the notebook. — /vi/ **3** to be established, be verified. *sabat-lina ʕinn il-ḥamaas li-waḥd-u miʃ kifaaya* it was proved to us that enthusiasm alone is not enough. ‖ *subuut ir-ruʕya* confirmation of the sighting of the new moon marking the beginning of a lunar month, particularly Ramadan. - vn *subuut*; ava *saabit*; pva *masbuut*.

ثبات *sabaat* /n/ *[athl]* standing position. *rama l-ʠurṣ[i] min is-sabaat* he threw the discus from a standing position.

ثابت *saabit* /interj/ *[mil, athl]* as you are!

تبت *tibit* /adj * and pl *tubata*/ tenacious, cheeky, insolent, obstinate.

أثبت *ʕaṣbat[1]* /el/ more/most reliable, firm, steady etc.

أتبت *ʕatbat* /el/ more/most cheeky, insolent etc.

تبات *tabaat: ʒaaʃu f-tabaat wi-nabaat* ≈ they lived happily ever after.

تباتة *tabaata* /n/ obstinacy, insolence, intransigence.

تبيت *tabiit* /adj pl *tubata*/ = *tibit*.

ثبّت *sabbit* /vt/ **1** to fix, fasten. *sabbit il-ʕiʒlaan ʒala l-ḥeeṭa* he fastened the poster to the wall. **2a** to stabilize, make firm. *bi-nsabbit if-faʒr[i] b-binas* we clip the hair in place. *gihaaz bi-ysabbit ik-kahraba* an apparatus which stabilizes the electricity. *sabbit ʕiid-ak* steady your hand! ‖ *sirr it-tasbiit [Chr]* sacrament of confirmation. **2b** *[admin]* to hire on a permanent basis (after a probationary period). *baʒd[i] sana l-mudiir sabbit-ni fiʃ-fuxl* after a year the director made my appointment permanent. — /vi/ **3** to provide evidence, establish validity. *tiqdar tisabbit ʒak-kalam-da* can you establish the truthfulness of what has been said? - vn *tasbiit*; ava/pva *misabbit*.

تبّت *tabbit* **1** /vt/ to fix tightly, tighten. *tabbit ʕiid-ak ʒal-ligaam* tighten your grip on the reins. **2** /vi/ **2a** to behave assiduously or tenaciously. *tabbit ʒalayya ʒaʃaan ʕazuur-u* he insisted on my visiting him. *tabbitu ʒad-duruus ʠabl il-imtiḥaan* they studied hard before the exam. **2b** to ensure firmness or secure fastening. *tabbitit ʒal-xiyaaṭa* she reinforced the stitching. ‖ *tabbit fiyya* hold on to me tightly! - vn *tatbiit*; ava/pva *mitabbit*.

مثبّت *misabbit, musabbit* /n pl *-aat*/ fixing fluid.

اتبّت *ʕitsabbit* or *ʕissabbit* /vi/ **1** to be fastened. *ʕil-ʕadawaat bi-tissabbit bi-masamiir* the fixtures are fastened on with nails. **2a** to stabilize, firm up, be stabilized, be firmed up. *ʕil-ḥaraara ssabbitit ʒala daraga muʒayyana* the temperature was stabilized at a specific level. *ʕis-samaar yissabbit fi-baʒḍ-u* the rushes are drawn up tightly together. **2b** to be hired on a permanent basis (after a probationary period). **3** to ascertain the truth. *ʕana tsabbitt[i] min ik-kalaam illi ʠaal* I verified what was said. *ruuḥ issabbit minnu* go and find out the truth from him. - ava/iva *mitsabbit*.

اتّبت *ʕittabbit* /vi/ passive of *tabbit*. - iva *mittabbit*.

أثبت *ʕasbat[2]* /vt/ to prove. *ʕana ʕasbatt-i-lak bid-daliil il-qaaṭiʒ ʕinn[i] huwwa lli ʠaal* I proved to you incon-

trovertibly that he's the one who said (that). - vn *ʔisbaat*.
إثبات *ʔisbaat* /n pl *-aat*/ proof. ‖*muzakkirit ʔisbaat ḥaala* official complaint lodged with police. *-faahid ʔisbaat* witness for the prosecution.

[2] س ب ت
سبت *sabt* (also *yoom sabt*) /n pl *subúta, sibíta, subuuta*/ a Saturday. *ʔis-sabt* or *yoom is-sabt* Saturday. ‖ *ʔis-sabt' sabbuut* ≈ Saturday is grim (part of a children's rhyme about the days of the week - Saturday, as the first day of the working week, has the same significance in Egypt as blue Monday does in the West). ‖*min qaddim is-sabt' laqa l-ḥadd' quddaamu [prov]* ≈ he who does good on Saturday will find his reward on Sunday. *- sabt in-nuur [Chr]* Holy Saturday.
سبّوت *sabbuut: ʔis-sabt' sabbuut* see *sabt*.

[3] (س ب ت)
سبت *sabat*[2] <P *sapad*> /n pl *ʔisbita, sibíta*/ basket woven of split cane, (loosely) any stiff straight-sided basket. ‖ *sabat mayya* basket containing a vessel of water for flowers.
السبتيّة *ʔis-sabtiyya* /prop n/ quarter in Northern Cairo. ‖*faar is-sabtiyya* a large mouse or rat which, it is humorously claimed, is responsible for frequent cuts in the Cairo electricity supply.

[4] س ب ت see س ب ب و ت : *sabbuuta*

س ب ت م -
سبتمبر *sibtimbir, sibtimbar* <Engl> /n/ September.

[1] س ب ح
سبحة *sibḥa* /n pl *sibaḥ*/ **1** prayer beads, rosary, worry beads. ‖*ʕas-sibḥa* numerously, as in *yilʕan ʔabuu-k ʕas-sibḥa* damn your father several times over! **2** *[naut]* lifeline.
سبحان *subḥaan* or *subḥaan: subḥaan allaah* (1) praise be to God (formula used in prayer). (2) (also *subḥaan-ak ya rabb*) God be praised! (exclamation of wonder). ‖*subḥaan allaah ʕaleek* (or *fi-ṭabʕ-ak*) ≈ Good Lord! is that any way to behave? *- subḥaan-u wa-taʕaala* may He be praised, (formula used after the mentioning of God's name as a sign of absolute submission), as in *ʔallaah subḥaan-u wa-taʕaala ʔamar bir-raḥma* God, may He be praised, commanded the showing of mercy.
سبّوح *subbuuḥ* /n/ Most Glorious One (epithet of God).
مسبحة *masbaḥa* /n pl *masaabiḥ*/ = *sibḥa*.
سبّح *sabbaḥ* **1** /vt/ to praise God. **2** /vi/ to say or repeat *subḥaan allaah. bi-ysabbaḥ ʕas-sibḥa* he says *subḥaan allaah* while passing the prayer beads through his fingers. ‖*bi-ysabbaḥ bi-ḥamd il-mudiir [deris]* he is always singing the praise of the director. - vn *tasbiiḥ*; ava *misabbaḥ*.
تسبيح *tasbiiḥ* /n pl *tasabiiḥ*/ glorification of God by exclaiming *subḥaan allaah*.
تسبيحة *tasbiiḥa* /pl *-aat*/ instance noun of *tasbiiḥ*.
تسبحة *tasbiḥa* /n pl *tasabiiḥ*/ *[Chr]* collection of liturgical hymns of praise.
اتسبّح *ʔitsabbaḥ* or *ʔissabaḥ* /vi/ to be praised, be glorified (of God). - iva *mitsabbaḥ*.

[2] س ب ح
سبح *sabaḥ (a)* /vi/ **1** to seep. *ʔil-mayya sabaḥit min taḥt il-baab* the water seeped in under the door. **2** to crawl (of insects). *ʔil-baqq' saabiḥ ʕal-ḥeeṭa* bedbugs are crawling on the wall. **3**↑ to swim. ‖*dayman yisbaḥ fi-ʔafkaar-u* he is always lost in thought. *-saabiḥ fi-ʕaraq-u mil-ḥarr* he is dripping with sweat because of the heat. *-ḥ-aqṭaʕ sabḥ-u* I'll ruin him. ▲vn *sabḥ, sibaaḥa*; ava *saabiḥ*.
سباحة *sibaaḥa* /n/ swimming. *ḥammaam sibaaḥa* swimming pool.
سبّاح *sabbaaḥ* /n */ swimmer.

[3] س ب ح
سبح *sibaḥ* /interj/ ≈ get him! (said to incite a dog against someone).

س ب خ
سبخ *sabax* /n/ salt and other chemicals that prevent agricultural land from growing plants. *ʔarḍ' sabax* agricultural land that has been damaged by chemicals.
سباخ *sibaax* /n/ fertilizer. *sibaax baladi* manure, dung used as fertilizer. *sibaax kimaawi* chemical fertilizer.
سبّخ *sabbax* **1** /vt/ to fertilize, enrich. *nisabbax il-ʔarḍ' bi-sbaax baladi* we fertilize the soil with manure. ‖ *ʔana ḥ-asabbax-u ʕala lli ʕamal-u fiik* I will give him a talking to for what he's done to you. **2** /vi/ to become sterile owing to the presence of chemicals or salts (of land). *ʔil-ʔarḍ' sabbaxit wi-ʕayza ʕlaag* the soil has become unproductive and needs treatment. - vn *tasbiix*; ava/pva *misabbax*.
تسبيخة *tasbiixa* /n pl *-aat*/ instance noun of *tasbiix*.
اتسبّخ *ʔitsabbax* or *ʔissabbax* /vi/ to be fertilized, be enriched. - iva *mitsabbax*.

س ب د ا ج
سبيداج *sibidaag* <P *safedâj*> /n/ white lead. - also *ʃisbidaag*.

س ب ر
سبّورة *sabbuura, sabbuura* /n pl *-aat, sababiir*/ blackboard.

س ب ر ت و
سبرتو *sibirtu, sibartu* <It *spirito*> /n/ alcohol, (methylated) spirit. *sibirtu ʃabyaq* surgical spirit, rubbing alcohol. *sibirtu ʃaḥmar* methylated spirits.
سبرتاية *sibirtaaya* /n pl *-aat*/ **1** can with a long spout used to feed methylated spirits to primus stoves. **2** alcohol burner.

س ب ر س
سبارس *sabaaris* /coll n/ cigarette butts gathered from the street etc. for re-use.
سبرساية *sibirsaaya* /unit n, pl *-aat*/ a cigarette butt.
سبارسجي *sabarsagi* /n pl *-yya*/ gatherer of discarded cigarette butts.
سبرس *sabras* /vi/ *[joc]* to smoke cigarette butts. - vn *sabrasa*; ava *misabras*.

س ب س ب [1]
سبسب *sabsib* [1] /vt/ to take great pains with (one's hair). - vn *sabsaba*; ava/pva *misabsib*.
اتسبسب *ʃitsabsib* or *ʃissabsib* /vi/ to be overdone, be elaborately coiffed (of hair). - vn *tisabsiib*, ava *mitsabsib*.

س ب س ب [2]
سبسب *sabsib* [2] /vi/ to flow, stream. *ɛenee sabsibit bid-dumuuɛ* or *ʃid-dumuuɛ sabsibit min ɛenee* ≈ he shed tears. - vn *sabsaba*; ava *misabsib*.

س ب س ب [3]
سبسب *sibsib* /n pl *sabaasib*/ small bamboo flute, pitched higher than the *naay*.
سباسب *sabaasib: ʃis-sabaasib il-kubra [magic]* collection of incantations pronounced against evil spirits.

س ب ط [1]
سبط *sibṭ* /n pl *ʃasbaaṭ*/ grandchild. || *ʃasbaaṭ in-nabi* the Prophet's descendants. - *ʃil-ʃasbaaṭ* the twelve tribes of Israel.

س ب ط [2] see س ب ا ط : *subaaṭa*

س ب ع [1]
سبعة *sabɛa* /num: in absol state, in apposition, or w foll n sing in contexts of ordering and itemizing; pl *-aat*/ seven. *sabɛa w-ɛifriin* twenty-seven. *sabɛa saaʏ* seven piastres. *sabɛa ʃaay* seven teas. || *ʃibn*^{i} (or *bint*^{i}) *sabɛa* (1) a baby born two months prematurely. (2) a person of highly-strung nervous temperament (characteristics said to be typical of those born prematurely). - *ʃis-sabɛa w-dimmit-ha* (or *w-timmit-ha*) every conceivable evil, as in *ʈallaɛu fii ʃis-sabɛa w-dimmit-ha* they dragged up every bad thing they could say about him, *ɛamal is-sabɛa w-dimmit-ha* he left no sin uncommitted. - *ʃis-sabɛa* the seven different ways of reading the Koran. *bi-yiqra (l-qurʃaan) bis-sabɛa* he recites the Koran in the seven ways (a sign of great accomplishment).
سبع *sabaɛ* /num; in const w foll n pl; usu *sabaɛt* when followed by n ordinarily w initial hamza/ seven. *sabaɛ daqaayiq* seven minutes. *sabaɛt iyyaam* seven days. || *buloofar bi-yaaqa sabɛa* V-necked sweater. - *sabaɛ ṣanaayiɛ f-ʃidee wil-ḥamm*^{a} *ḥaaṭiṭ ɛalee [prov]* he has everything going for him but luck. - *ʃis-sabaɛ banaat* the Sisters of Charity.
سباعي *subaaɛi* /adj/ consisting of seven parts.
سبوع *subuuɛ* /n/ ceremony marking the seventh day after the birth of a child.
السبوعات *ʃis-subuɛaat* /n/ Jewish Pentecost, Feast of Weeks.
أسبوع *ʃusbuuɛ, ʃasbuuɛ* /n pl *ʃasabiiɛ*/ week. *ʃusbuuɛ il-ʃalaam [Chr]* Holy Week.
أسبوعي *ʃusbuuɛi, ʃasbuuɛi* /adj/ weekly. *ɛamra ʃusbuɛiyya* a weekly overhaul.
سبعتاسر، سبعه عشر *sabaɛtaaʃar* **1** /num pl *-aat*/ seventeen. **2** *ʃil-sabaɛtaaʃar* /adj invar/ the seventeenth.
سبعين *sabɛiin* **1** /num pl *-aat*/ seventy. || *ʃibn*^{i} *sittiin fi-sabɛiin* see *sittiin*. **2** *ʃis-sabɛiin* /adj invar/ the seventieth.
سبعمائة، سبعميّة *subɛumiyya* **1** /num/ seven hundred. **2** *ʃis-sabɛiin* /adj invar/ the seven-hundredth.
سابع *saabiɛ* /adj/ seventh. || *min saabiɛ sama l-saabiɛ ʃarḍ* from very high up to very low down. - *saabiɛ nooma* a very deep sleep. - *ʃin-nabi waṣṣa ɛala saabiɛ gaar [prov]* ≈ the Prophet said we should care for even our most distant neighbours.
سبّع *sabbaɛ* /vi/ **1** to make seven. **2** to complete seven days. *ʃil-mawluud sabbaɛ* the baby is seven days old. - vn *tasbiiɛ*; ava *misabbaɛ*.

س ب ع [2]
سبع *sabɛ* /n pl *subúɛa, subuuɛ, sibaaɛ*/ lion. || *raagil sabɛ* a real man! - *ya sabɛ-i*^{i} epithet a woman gives her

husband when mourning him. - *geeb is-sabɛ' ma-yixlaaʃ [prov]* (a lion always has plenty) ≈ a gallant person can always find means to assist others. - *sabɛ' walla ḍabɛ* (is it a lion or a hyena) ≈ success or failure? - *ħagar daayir wala sabɛ' naayim [prov]* (better a rolling stone than a sleeping lion) ≈ a working nobody is better than idle nobility. - *zahra kaff is-sabɛ* motif used in tent appliqué work (see Pl.H, 26).

[1] س ب غ

صبغ *sabaɣ (also ṣabaɣ) (u)* /vt/ **1** to dye. **2** to have dyed. - vn *sibaaɣa, sabɣ*; ava *saabiɣ*; pva *masbuuɣ*.

صبغة *sabɣa* (also *ṣabɣa*) /n pl *-aat*/ dye, dye-stuff. ‖*fuuṭit is-sabɣa* nylon napkin used by hairdressers to protect customers' clothes from dye.

مصبغة *masbaɣa* (also *maṣbaɣa*) /n pl *masaabiɣ*/ **1** dye-works, dye factory. **2** dry-cleaning establishment.

اتصبغ *ʕitsabaɣ* or *ʕissabaɣ* (also *ʕiṭṣabaɣ*) /vi/ to be dyed. ‖*ʕitsibiɣ fin-niila↓ [women]* go to hell! - *di tsabaɣit miz-zaɛal wi-xassit in-nuṣṣ* she's become gloomy and wasted away with grief. - iva *mitsibiɣ*.

انصبغ *ʔinsabaɣ* = *ʕitsabaɣ*. - iva *minsibiɣ*.

[2] س ب غ

سابغ *saabiɣ↑* /adj pl *sawaabiɣ*/ full, complete, abundant (notably of God's grace). *ʕif-fukr' li-llaah ɛala niɛam-u s-saabiɣa* thanks and praise be to God for His ample grace.

أسبغ *ʔasbaɣ↑* /vt/ **1** to bestow grace and favour upon, be bountiful towards (s.o., especially of God). **2** *[Isl]* to perform (the ritual ablution) correctly. - vn *ʕisbaaɣ*; ava *musbiɣ*.

س ب ق

سبق *sabaq' (a)* /vt/ **1** to precede, go before. *ʕil-xuṭuuba b-tisbaq ɛaqd il-ʕikliil* the betrothal precedes the church wedding. *kaan sabiq-ni fil-madrasa b-sana* he was a year ahead of me in school. ‖ *ʕil-kaff iṣ-saabiq saabiq [prov]* ≈ the first blow has the advantage. - *sabq il-ʕiṣraar [leg]* premeditation. *qatl[a] ɛamd' maɛa sabq il-ʕiṣraar [leg]* premeditated murder, first degree murder. - *xeer-ak saabiq* ≈ your good deed came first, so you are the one who should be thanked (a modest reply to an expression of thanks). **2** overtake, outstrip. ‖*ɛallimnaa f-fiħaata sabaq-na ɛal-ʕabwaab [prov]* (we taught him to beg, and he beat us to the doors) ≈ he bites the hand that fed him. - *ḍarab-ni w-baka w-sabaq-ni wi-ʃtaka [prov]* ≈ he wronged me and claimed he was wronged. - *ʕilli sabaq kal in-nabaq [prov]* ≈ the early bird catches the worm. - *saabiq ʃiih if-ʃiṭaan* the devil got there (i.e. to the mother) first, he is a very son of the devil. — /invar/ **3** modal indicating precedence in time. *sabaq ɢult-i-lak ma-tgii-ʃ hina* I've told you before not to come here. - vn *sabq, sabaɢaan*; ava *saabiq*; pva *masbuuq*.

سابق *saabiq'* /adj */ former, previous. *ʕir-raʕiis is-saabiq* the ex-president.

¶ *saabiqan↑, saabiɢan* /adv/ formerly, previously.

سابقة *sabɢa* /n pl *sawaabiq*/ **1** precedent. *ʕil-mawḍuuɛ da lii sabɢa ɛandina fif-firka* this matter has a precedent in our firm. **2** *[leg]* previous criminal conviction. *ʕarbaab is-sawaabiq* previous offenders. *mara* (or *raagil*) *ʕarbaab sawaabiq* a woman (or man) of the criminal sort.

سبق *sabaq[2]* /n/ **1** competition, contest. **2** race. *ħuṣaan sabaq* racehorse. *ʕis-sabaq* the races.

أسبق *ʔasbaq* /el/ earlier/earliest, former/first.

أسبقيّة *ʔasbaqiyya* /n pl *-aat*/ priority, seniority. *ʕif-fira ħasab ʔasbaqiyyit il-ħagz* purchasing orders are fulfilled in the order in which they are placed.

سبّق *sabbaq* /vi/ to act before, ahead or in advance. - vn *tasbiiq*; ava *misabbaq*.

مسبّقًا *musabbaqan* /adv/ in advance.

سابق *saabiq[2]* /vt/ to race against, compete with. *miin yisabiq-ni fil-ɢoom* who wants to race me at swimming? - vn *sibaaq, musabɢa, misabɢa*; ava *misaabiq*.

سباق *sibaaq* /n pl *-aat*/ **1** competition, contest. **2** race.

مسابقة *musabɢa* /n pl *-aat*/ **1** competition, contest. *ʕimtiħaan musabɢa* a competitive examination. **2** race.

اتسابق *ʕitsaabiq* or *ʕissaabiq* /vi/ to compete (with o.a.). - ava *mitsaabiq*.

متسابق *mutasaabiq↑* /n */ competitor, contestant.

س ب ك

سبك *sabak (u)* /vt/ **1** *[metal]* to cast, found. **2** to plan meticulously. *kidba masbuuka* a well thought-out lie. - vn *sabk, sibaaka, sabakaan*; ava *saabik*; pva *masbuuk*.

سبيكة *sabiika* /n pl *sabaayik*/ **1** ingot (of gold or silver). **2** alloy.

سبّاك *sabbaak* /n */ **1** plumber (particularized as *sabbaak ṣiħħi*). **2** metal founder (particularized as *sabbaak maɛaadin*).

مسبك *masbak* /n pl *masaabik*/ foundry.

اتسبك *ʕitsabak* or *ʕissabak* /vi/ **1** *[metal]* to be cast, be founded. **2** to be well-planned. - iva *mitsibik*.

انسبك *ʔinsabak* = *ʕitsabak*. - iva *minsibik*.

سبّك *sabbik* /vt/ **1** to do (s.th.) well. *sabbik il-ɢamaliyya* he organized the job well. **2** *[cook]* to reduce, cook in concentrated stock, juice or sauce.

‖ *ʃil-misabbik wil-miḫabbik* elaborately cooked food. - vn *tasbiik*; ava/pva *misabbik*.
تسبيكة *tasbiika* /n/ a dish cooked in concentrated stock, juice or sauce.
اتسبّك *ʃitsabbik* or *ʃissabik* /vi/ passive of *sabbik*. - iva *mitsabbik*.

س ب ل [1]
سبيل *sabiil* /n/ **1**↑ /pl *subul*/ way, path. - common in unelevated speech in the phrases: *ɛaabir sabiil* a passer-by. *raaḥ li-ḫaal sabiil-u* he went his own way. *ʃasxam wi-ʃaḍall[i] sabiil* a far worse path to follow, a far worse course, as in *ʃil-ɤina wiḫiʃ wil-faqr[i] ʃasxam wi-ʃaḍall[i] sabiil* wealth is bad but poverty is far worse. *ɛala sabiil* as, by way of, as in *ɛala sabiil il-misaal* by way of example, *ʃif-firka bi-twazzaɛ in-nataayig ɛala sabiil hadaaya* the company distributes the calendars as gifts. *fi-sabiil* for the sake of, as in *kull-u yhuun fi-sabiil ig-gumhuur* no effort is too great for the sake of the public, *fi-sabiil illaah* for the sake of God, out of charity. **2** /no pl/ **2a** water distributed out of charity to the thirsty. **2b** *[obsol]* the cry of one distributing water to the thirsty. **3** /pl *sibíla*/ public drinking-fountain.
سبيل *sibiil* = *sabiil* 3.
سبّل *sabbil[1]* /vt/ to dedicate, set apart for charity, set apart to serve people. - vn *tasbiil*; ava/pva *misabbil*.
اتسبّل *ʃitsabbil[1]* or *ʃissabbil[1]* /vi/ to be dedicated, be set apart for charity. - iva *mitsabbil*.

س ب ل [2]
سبل *sabal[1]* /coll n/ heads or ears of cereals. ‖ *miʃt[i] sabal* braided stalks of green wheat which are hung in homes at the time of ripening for good luck, a kind of corn dolly.
سبلة *sabala* /unit n, pl *-aat*/ a head or ear (of a cereal plant).
سبلاية *sabalaaya* = *sabala*.
سبّل *sabbil[2]* /vi/ to put out ears (of cereals). - vn *tasbiil*; ava *misabbil*.

س ب ل [3]
سبل *sabal[2]* *(i)* /vt/ **1** to drape, cause to hang loosely. *sabalit ṭarḥa ɛala ras-ha* she covered her head with a veil. ‖ *ya saabil is-satr[a] ɛala ɛabiid-ak ya-rabb* ≈ you cover your creature's sins with the veil of Your mercy, O Lord! **2** to shed (tears). - vn *sabl*; ava *saabil*; pva *masbuul*.
سبّل *sabbil[3]* /vt/ **1** to half close (the eyes). *sabbilit ɛenee-ha min ik-kusuuf* she cast down her eyes out of bashfulness. **2** to close (the eyes of one deceased). - vn *tasbiil*; ava/pva *misabbil*.
اتسبّل *ʃitsabbil[2]* or *ʃissabbil[2]* /vi/ to be closed (of eyes). - iva *mitsabbil*.

س ب ل [4]
سبل *sabal[3]* *(i)* /vt/ to spread (manure), fertilize (with manure). - vn *sabl*; ava *saabil*; pva *masbuul*.
سبلة *sabla* /n/ manure, dung (used for fertilizer).
اتسبل *ʃitsabal* or *ʃissabal* /vi/ to be manured. - iva *mitsibil*.

س ب ل س
سبلس *sablis* /vi/ to throw one's opponent using the overhead hold (wrestling). - vn *sablasa*; ava *misablis*.

س ب ل ى -
سبليونة *sabalyoona* <perh It *spagnola*> /n pl *-aat*/ vertical locking-rod on a double door or window, espagnolette bolt. - also *sabanyoola*.

س ب ن
سبان، صبّان *sibaan* /coll n/ eggs of hair-lice, nits. *naas zayy is-sibaan* people who can't be shaken off.
سبانة، صبّانة *sibaana* /unit n, pl *-aat*/ an egg of a hair-louse, a nit.
سبّن *sabbin* /vi/ to become full of nits (of hair). - ava *misabbin*.

س ب ن س
سبنسة *sibinsa* <It *dispensa*> /n pl *-aat*/ caboose, guard's van (on a train).

س ب ن ى -
سبنيولة *sabanyoola* <perh It *spagnola*> /n pl *-aat*/ vertical locking-rod on a double door or window, espagnolette bolt. - also *sabalyoona*.

س ب ه ل ل
سبهللة *sabahlala* /adv/ haphazardly, any old how. ‖ *huwwa waaxid il-ḫikaaya sabahlala* he's taking the matter too lightly.
سبهلى *sabahlali* /adj invar/ aimless, careless, vague. *ɛiiʃa sabahlali* an aimless life.

ء س ب و ر : *suboor* see س ب و ر

س ب ى [1]
سبى *saba (i)* /vt/ **1** to take prisoner (especially in war).

2 to charm, captivate. *gamal-ha sabaa* her beauty enchanted him. - vn *saby*; ava *saabi*; pva *masbi*.
اتسبى *ʔitsaba* or *ʔissaba* /vi/ **1** to be taken captive. **2** to be enchanted, be charmed. - iva *mitsibi*.

² (س ب ی)
سوبية *subya* <T *sübye*> /n/ cold drink of slightly fermented rice, sugar and water.
سبية *sibya¹* <P *sih-pây*> /n pl *sibay*/ **1** trestle, tripod. **2** steelyard. - also *seeba*.

س ب ی ا
سبيا *sibya²* <perh It *seppia*> /coll n/ cuttlefish.

س ت ا ن
ستان *sataan* <Fr> /n/ satin. *kastuur sataan* flannel-backed satin.

س ت ت ¹
ستّ *sitt¹* /num: in constr w foll n pl/ six. *sitt' sniin* six years.
ستّة *sitta* /num; in absol state, in apposition, or w foll n sing in contexts of ordering and itemizing; pl *-aat*/ six. *ʔiḥna sitta* there are six of us. *ʈalabna sitta salaṭa* we ordered six salads.
ستّاشر، ستّة عشر *sittaaʃar* **1** /num pl *-aat*/ sixteen. **2** *ʔis-sittaaʃar* /adj invar/ the sixteenth.
ستّين *sittiin* /num/ **1** /pl *-aat*/ sixty. ‖*ʂaal waaḥid wi-sittiin* he took to his heels. **2** /no pl/ intensifier used in curses and insults. *ʔibn' sittiin kalb* ≈ son of a bitch sixty times over. *ruuḥ fi-sittiin dahya* ≈ go to blackest hell! *ʔibn' sittiin fi-sabɛiin* ≈ son of (a bitch) sixty times multiplied by seventy times over. — *ʔis-sittiin* /adj invar/ **3** the sixtieth.
ستّمية، ستّمائة *suttumiyya* **1** /num pl *-aat*/ six hundred. **2** *ʔis-suttumiyya* /adj invar/ the six-hundredth.
ساتت *saatit* /adj/ sixth.

س ت ت ²
ستّ *sitt²* /n pl *-aat*/ **1** lady, woman. *ʔis-sittaat fi-ʔingiltira* the women in England. ‖*ʔis-sitt' btaɛt-u* his wife. - *sitt il-ḥusn (wig-gamaal)* (1) fairy-tale princess or heroine. (2) *[bot]* belladonna. **2** mistress. *sitt il-beet* the mistress of the house. *sitt-ik mawguuda* is your mistress at home? — /no pl/ **3** respectful form of address or reference to a grandmother. *ʔumm-u w-sitt-u maɛaa* his mother and his grandmother are with him. **4** title of and form of address or reference to, a woman. *ʔis-sitt' galiila* Mrs. Galila. *la muʔaxza ya sitt-i* excuse me ma'am. ‖*sitt' haanim* madam. - *ʔis-sitt* (1) respectful epithet of Sayyida Zaynab. (2) respectful epithet of the late singer Umm Kalthum. - *sitt il-ḥabaayib* the mother. **5** /in constr, w fem referent/ the best of, the finest. *ʔil-luɣa l-ɛarabiyya sitt il-luɣaat* Arabic is the best language. *sitt il-kull* or *sitt is-sittaat* the best of all.
ستّاتى *sittaati* /adj invar/ coquettish, exaggeratedly feminine. *hiyya taṣarrufat-ha sittaati zyaada ɛan il-luzuum* she affects too many girlish airs and graces.
ستّت *sattit* /vt/ to give (a woman her) due as a feminine creature meant for adornment (usually with the implication of relieving a woman of the necessity of doing menial tasks by providing servants or appliances). - vn *tastiit*; ava/pva *misattit*.
اتستّت *ʔitsattit* or *ʔissattit* /vi/ **1** passive of *sattit*. **2** to affect mannerisms of a lady of leisure, play the lady. *ʔana mif waxda ɛala ʂillit il-ḥaraka wala ʔinni ʔatsattit* I'm not used to inactivity nor to lolling about the house like an odalisque. - ava *mitsattit*.
متستّت *mitsattit* /adj */ coquettish, mincing, artificial.

س ت ر
ستر *satar (u)* /vt/ **1** to protect (of God). *loola satr' rabb-i-na kaan maat* but for God's protection he would have died. *ʔustur ya rabb* or *rabb-i-na yustur* Lord preserve us! *ʔilli yustur-u l-mawla ma-yifḍaḥ-uu-ʃ il-ɛabd [prov]* no man can disgrace him whom God protects. ‖*ʔallaah yistur-ak↓* please, as in *ʔallaah yustur-ak tiddii-ni ʂirʃ* please give me a piastre. **2** to hide, shield so as to maintain decency and decorum. *ʔusturi riglee-ki* cover your legs for the sake of decency. *ʔustur nafs-ak* don't expose yourself to scandal. *ɛayfiin masturiin* (1) they live quiet, respectable lives, (2) they enjoy a rich life. ‖*ʔustur bint-ak* get your daughter married! - *xallii-ha mastuura* ≈ let sleeping dogs lie. **3** to cover, protect. *ʔil-xeema satraa* the tent gives him cover. — /vi/ **4** to afford protection or cover (from scandal). *ʔiggawwizt-a-ha ɛafaan ʔastur ɛaleeha* I married her to protect her reputation. *laazim tusturi ɛala gooz-ik* you must shield your husband's good name. **5** to render good service, fulfil a need. *ʔil-ɛarabiyya di satarit maɛaaya ɛafar siniin* this car has served me well for ten years. *ʔil-maɛaziim kaanu kutaar laakin il-ḥamdu l-illaah il-ʔakl' satar* there were many guests, but, thank God, the food was adequate. - vn *satr*; ava *saatir*; pva *mastuur*.
ستر *satr* /n/ **1** divine protection. ‖*ɛandu s-satr* he has the decent minimum (euphemism = he has nothing). - *ɛandi s-satr* I have enough, I'm doing all right (indirect response to inquiry into one's financial state). - *ɛandak is-satr [women in trad soc]* may you have

God's protection from disgrace (response to *ʔitfaḍḍali ʕandina).* - *hiyya satrᵘ w-ɤaṭa* ≈ she's the sort to keep your name clean (of a potential wife). **2** *[Chr]* altar covering.

ساتر *saatir* /n/ **1** /no pl/ Protector (epithet of God). ‖*ya saatir* said upon entering others' homes, giving the occupants a chance to prepare themselves. - *ya saatir (ya rabb)* expression of dismay ≈ good God! God preserve us! **2** /pl *sawaatir/ [mil]* (protective) cover. *ʔiḍ-ḍarbᵘ min xalfᵘ saatir* firing from behind cover.

مستور *mastuur* /adj */ **1** wealthy. **2** having one's basic needs provided for. *ʔana mastuur il-ḥamdu li-llaah* I make a living, I get along all right, praise be to God!

ستره *sutra* /n/ **1** /pl *-aat, sutar/* top part of a uniform, jacket of a uniform. **2** /no pl/ protection, safeguard. *gawaaz il-banaat sutra* ≈ it's a safeguard for girls to get married.

ستر *sitr* /n pl *suṭuur, ʔastaar/* curtain, drape.

ستار *sitaar* /n/ curtain, screen. ‖*sitaar naar [mil]* artillery barrage. - *ʔis-sitaar il-ḥadiidi* the Iron Curtain. - *min wara s-sitaar* behind the scenes, back-stage, secretly.

ستارة *sitaara* /n pl *sataayir/* curtain. ‖*sataayir maʕdaniyya* venetian blinds.

ستّار *sattaar* /n/ Protector (epithet of God). ‖ *ʔis-sattaar mawguudᵈ* ≈ God will never let us down. - *ya sattaar ʕaleeku* ≈ how exasperating you are!

اتستر *ʔitsatar* or *ʔissatar* /vi/ **1** to be shielded so as to maintain decency and decorum. *ma-tiqlaʕ-fᵘ quddaam in-naas - xuffᵘ guwwa titsitir* don't undress in front of everyone! go inside where no one can see! **2** to appear presentable. *ma-ʕandii-ʃ wala badla ʔatsitir biiha* I don't have a single suit I can decently wear. **3** to maintain a decent standard of living. *laazim ʔalaqii-li fuɤla ʔatsitir biiha* I must find a job that'll provide for me adequately. - iva *mitsitir.*

ستّر *sattar = satar.* - ava/pva *misattar.*

اتستّر *ʔitsattar* or *ʔissattar* /vi/ to hide oneself, disguise oneself. - ava *mitsattar.*

¶ *ʔitsattar ʕala* to cover up (a crime etc.).

مستتر *mustatirᵗ* /adj */ hidden, disguised.

س ت ف

ستّف *sattif* /vt/ **1** to arrange, stack up, order neatly. *tastiif ik-kutub* shelving the books. *xud ik-karaasi di sattif-ha guwwa* take these chairs and stack them up inside. **2** to pack (with). *ḥ-asaafir bukra w-lissa ma-sattiftᵘ-ʃ funaṭ-i* I'm travelling tomorrow and have't packed my bags yet. *ʔinta ɤattift il-ʕarabiyya naas kida leeh* why have you packed the car with people like this? **3** to rebuke harshly. - vn *tastiif*; ava/pva *misattif.*

اتستّف *ʔitsattif* or *ʔissattif* /vi/ **1** to be arranged, be put in order, be stacked. *ʔik-kutub mitsattifa ʕal-ʔurfuf ḥasab il-mawḍuʕaat* the books are arranged on the shelves by subject. **2** to be packed (with). **3** to be rebuked harshly. - iva *mitsattif.*

س ت ن ى ه

ستانيه *sataneeh* <Fr *satiné*> /n/ cotton satin, satinet.

س ت ى ا ن

سوتيان *sutyaan* <Fr *soutien*> /n pl *-aat/* brassiere. - also *sintiyaan, suntiyaan.*

س ج د

سجد *sagad (u)* /vi/ to prostrate oneself in (or as if in) prayer. - vn *suguud*; ava *saagid.*

سجدة *sagda* /n pl *-aat/* **1** a prostration (in prayer). ‖*ṣalaat is-sagda [Chr]* liturgical prayers used in Holy Week. **2** *[Isl]* one prostration (as a part of ritual prayer).

سجّاد *siggaad* /coll n/ carpet(s), carpeting. ‖*mudiir is-siggaad* official responsible for the carpets in all mosques under the jurisdiction of the Ministry of Religious Endowments.

سجّادة *siggaada* /unit n, pl *-aat, sagagiid/* mat, carpet. *siggaadit ṣala* prayer rug. ‖*ʃeex is-siggaada* head of a Sufi order.

مسجد *masgid* /n pl *masaagid/* mosque.

سجّد *saggid* /vt/ *[usu children]* to cause to submit, outdo. *saggidt-ak - miʃ ḥa-tḥaawil titnaaqiʃ maʕaaya taani* I've bested you - don't try to argue with me again! *ḥ-asaggid-ha b-kalaam-i l-ḥilw* I'll make her mine with sweet-talk. - vn *tasgiid*; ava *misaggid.*

اتسجّد *ʔitsaggid* or *ʔissaggid* /vi/ passive of *saggid.* - iva *mitsaggid.*

س ج ر [1]

سجّر *saggarᵗ* /vt/ to encourage, embolden, egg on. *ʔinta lli saggart il-wad-da ʕaleek* you are the one who encouraged that boy to be too familiar with you. - vn *tasgiir*; ava/pva *misaggar.*

اتسجّر *ʔitsaggar* or *ʔissaggar* /vi/ **1** to take courage, dare (to do). **2** to be encouraged, be emboldened. - ava/iva *mitsaggar.*

س ج ر [2]

سيجار *sigaar* /n/ cigar.

سيجارة *sigaara, sugaaraᵈ* /n pl *sagaayir/* cigarette.

‖*sigaarit xeeṭ* spool of thread (the spool being a small tube of cardboard).

سجّر *saggar²* /vi/ *[joc]* **1** to smoke cigarettes. **2** to hand out cigarettes. *ʕif-fayyaal kaan mizargin li-ʁaayit ma saggart-i-lu* the porter was unhelpful until I gave him a smoke. - vn *tasgiir*; ava *misaggar*.

س ج ع

سجع *sagaʕˀ (a)* /vt/ to speak or write (prose) in a rhymed and rhythmical fashion. - vn *sagʕ*; ava *saagiʕ*; pva *masguuʕ*.

سجع *sagʕ* /n/ rhyme and rhythm in prose.

سجعة *sagʕa* /inst n, pl *-aat*/ a rhyming word in prose.

س ج ف

سجاف *sigaaf* /n pl *-aat*/ trimming ribbon, facing.

س ج ق ق

سجق *suguqq* <T *sucuk*> /coll n/ sausage(s).

سجقة *suguqqa* /n pl *-aat*/ a sausage.

سجقاية *suguqqaaya = suguqqa*.

س ج ل

سجل *sigill* /n pl *-aat*/ register, record. ‖*ʕis-sigill il-madani* the Civil Registry (of births and deaths).

سجّل *saggil* /vt/ **1** to record, register. *saggilu l-bayanaat fi-daftar* they recorded the details in a ledger. *gawaab musaggal* registered letter. **2** to record (magnetically). *faraayiṭ tasgiil* (magnetic) recording-tapes. — /vi/ **3** to register (by pressing the numbered button) the desired floor (in an automatic lift). - vn *tasgiil*; ava *misaggil*; pva *musaggal*.

تسجيل *tasgiil* /n/ **1** (also *gihaaz tasgiil)* tape-recorder. **2** /pl *-aat*/ tape-recording.

مسجّل *musaggil* /n/ **1** /pl *-iin*/ registrar. **2** /pl *-aat*/ tape-recorder.

اتسجّل *ʕitsaggil* or *ʕissaggil* /vi/ passive of *saggil*. - iva *mitsaggil*.

س ج م

سجم *sagam (i)* /vt/ to put in a state of ecstasy. *ʕil-ʠaʕda sagamit il-waaḥid* the company and the surroundings put one in the best of moods. - ava *saagim*.

انسجم *ʕinsagam* /vi/ **1** to reach a state of euphoria or high satisfaction. *ḥafla ʕaaxir insigaam* a really swinging party. *ʕiddit-ni ḥall' lil-muʃkila ʕinsagamt' minnu* she gave me a solution to the problem that really pleased me. **2** to be harmonious. *ʕalwaan munsagima* harmonious colours. *ʕaxlaʠ-ha ma-b-tinsigim-f' maʕa ʕaxlaʠ-hum* her ways are not in tune with theirs. - vn *ʕinsigaam*; ava *minsigim, munsagimˀ*.

اتسجم *ʕitsagam* or *ʕissagam = ʕinsagam*. - ava *mitsigim*.

س ج ن

سجن *sagan (i)* /vt/ to imprison. *saganuu-ni f-ṭura* they imprisoned me at Turah. - vn *sagn, sign*; ava *saagin*; pva *masguun*.

سجن *sign* /n/ **1** imprisonment, jail sentence. *ʕidduu-lu sana sign* they gave him a year's imprisonment. ‖*ʕis-sign' lig-gidʕaan* prison is for the tough and manly (boast of jailbirds and criminals). **2** /pl *suguun*/ prison, jail. ‖*wiff' sguun* jailbird.

مسجون *masguun* /n */ prisoner. *masguun siyaasi* a political prisoner.

سجين *sagiin* /n pl *sugana/ = masguun*.

سجّان *saggaan* /n * and pl *saggaana/* jailer, prison warder.

اتسجن *ʕitsagan* or *ʕissagan* /vi/ to be imprisoned. - iva *mitsigin*.

انسجن *ʕinsagan = ʕitsagan*. - iva *minsigin*.

س ح ب

سحب *saḥab (a)* /vt/ **1** to pull along, draw, drag. *saḥabt-u min ʕiid-u* I drew him along by the hand. *lamma trawwaḥ tiṣḥab laha g-gamuusa f-ʕid-ha* when she goes home she has the buffalo in tow behind her. ‖*dayman maṣḥuub min lisaan-u* he is always insolent, voluble, and offensive. *-saḥab naaʕim li-* see *naaʕim*. **2** to take away, withdraw. *ʕil-balad saḥabit safir-ha* the country recalled its ambassador. *saḥab nafs-u min il-mawquuʕ* he withdrew from the matter. *ruḥt ana mmayyil wi-saaḥib is-sikkiina* I went and bent down and pulled out the knife. *saḥabtᵃ ʕafara gneeh mil-bank* I drew ten pounds from the bank. *saḥabt' ʃiik ʕala bank iskindiriyya* I drew a cheque on the bank of Alexandria. *ʕiṣḥab kart* draw a card! ‖*saḥab lisaan-u ʕalayya* he insulted me. **3** to draw out, flatten out. *bi-niṣḥab il-ʕagiina* we flatten out the dough. *saḥab id-daḥab* he hammered out the gold. **4** to spread (paste, gummy substance). *bi-niṣḥab il-maʕguun bi-sikkiina* we spread the paste with a painting spatula. **5** *[text]* to draw (cotton into threads). **6** *[naut]* to fly (a flag). — /vi/ **7** to exert hauling force. *mutoor il-ʕarabiyya dilwaʠti b-yiṣḥab ʕaḥsan mil-ʕawwil* the motor of the car pulls better now than before. - vn *saḥb, saḥabaan*; ava *saaḥib*; pva *maṣḥuub*.

مسحوب *maṣḥuub* /adj */ tapered, tapered to a point.

مسحوبات *maṣḥubaat* /pl n/ *[finan]* withdrawals.

سحاب *saḥaab* /coll n/ cloud(s).
سحابة *saḥaaba* /n pl *-aat*/ **1** /unit n/ a cloud. **2** cataract (of the eye).
سحّاب *saḥḥaab* /adj/ having a strong pull. *mooga saḥḥaaba* a wave with a strong pull.
اتسحب *ʔitsaḥab* or *ʔissaḥab* /vi/ **1** passive of *saḥab*. ‖*rooḥ-i b-titsiḥib minni* I feel faint, I'm about to faint away. **2** *[mil]* to withdraw, retreat. - ava/iva *mitsiḥib*.
انسحب *ʔinsaḥab* =*ʔitsaḥab*. ‖*faaz bil-ʔinsiḥaab* he won by default. - vn *ʔinsiḥaab*; ava/iva *minsiḥib*.
اتسحّب *ʔitsaḥḥab* or *ʔissaḥḥab* /vi/ to move stealthily, creep. *ʔil-wilaad itsaḥḥabu min ʏeer ṣoot ɛala ṭaraṭiif ṣawabiɛ-hum* the boys crept soundlessly on tiptoe. - ava *mitsaḥḥab*.

س ح ت
سحت *suḥt* /n/ ill-gotten gains, illegal possessions. *maal-u suḥt* his capital has been acquired illegally. *ɛiʔit-hum suḥt[i] ʔ-suḥt* they make their living by totally illicit means.

س ح ت و ت
سحتوت *saḥtuut* (also *samtuut*) /pl *saḥatiit*/ /n/ *[obsol]* **1** unit of land measure equal to 0.304 square metres. **2** one-twentieth of a piastre coin. - current in the phrases: *wala saḥtuut* ≈ not a single penny. *raagil saḥtuut* a tight-fisted miser.

س ح ح [1]
سحّ *saḥḥ[1] (i)* /vt and vi/ to flow, stream. *ɛenee nazla tsiḥḥ[i] (bid-) dumuuɛ* his eyes shed tears. *ʔin-naṭara kaanit bi-tsiḥḥ[i] ṭuul il-leel* it was raining cats and dogs all night long. - vn *saḥḥ, saḥaḥaan*; ava *saaḥiḥ*.
سحّاحة *saḥḥaaḥa* /n pl *-aat*/ burette.

س ح ح [2]
سحّ *saḥḥ[2]* exclamation urging a ram to fight, notably in the children's chant *ʔis-saḥḥ id-daḥḥ (ya) xaruuf naṭṭaaḥ*.

س ح ر [1]
سحر *saḥar (i)* /vt/ **1** to charm, enchant (of beauty etc.). *ya salaam lamma ɛeneen bint[i] tisḥir-ak* how wonderful it is when a girl's eyes ensnare you! **2** to transform, change (by magic). *ʔil-ɛaguuza saḥarit-u ʔarnab* the old woman turned him into a rabbit. — /vi/ **3** to cast a spell. *ʔil-bitt[i] saḥarit lil-waad ɛafaan yiḥibb-a-ha* the girl put a spell on the boy to make him love her. - vn *siḥr*; ava *saaḥir*; pva *masḥuur, masḥuur*.
سحر *siḥr* /n/ **1** magic, sorcery. **2** charm, allure.
سحري *siḥri* /adj/ magic(al). *ʔalɛaab siḥriyya* magic tricks. ‖*miraaya siḥriyya* distorting mirror. - *geeb siḥri* pocket sewn to the inside (of, e.g., trousers) as protection from pickpockets. - *ɛeen siḥriyya* glass peephole (in a door).
ساحر *saaḥir* /n * and pl *saḥara*/ sorcerer, magician.
مسحور *masḥuur* /adj/ hidden, concealed, secret. *geeb masḥuur = geeb siḥri* (q.v.). *xiyaaṭa masḥuura* (1) slip-stitching. (2) invisible mending.
مسحورة *masḥuura* /n pl *masaḥiir*/ concealed cupboard or storeroom, such as a cupboard under the staircase or a loft.
سحّار *saḥḥaar* /n * and pl *saḥara*/ magician, sorcerer.
سحّارة *saḥḥaara* /n pl *saḥaḥiir, saḥḥaraat*/ **1a** storage box, chest or crate. **1b** storage room (usually a loft). **2** *[agric]* inspection shaft in a covered drainage canal.
اتسحر *ʔitsaḥar* or *ʔissaḥar* /vi/ passive of *saḥar*. - iva *mitsiḥir*.

س ح ر [2]
سحور *suḥuur* /n/ last meal taken before daybreak during Ramadan.
سحّر *saḥḥar* /vt/ **1** to serve the *suḥuur* to, provide the *suḥuur* for. **2** to wake (Muslims) for the *suḥuur* during Ramadan, usually by means of drumming. - vn *tasḥiir*; ava *misaḥḥar*.
مسحّراتي *misaḥḥaraati* /n pl *-yya*/ one who cries and beats a drum to wake Muslims for the *suḥuur*.
اتسحّر *ʔitsaḥḥar* or *ʔissaḥḥar* /vi/ to eat the *suḥuur*. - ava *mitsaḥḥar*.

س ح س
سحس *siḥs* /n/ *[joc]* nickname for Hussein.

س ح س ح
سحسح *saḥsaḥ* /vi/ **1** to leak (of a liquid). *ʔil-mayya saḥsaḥit ɛal-ʔarḍ* the water leaked onto the ground. **2** *[slang]* to feel sexually excited. - vn *saḥsaḥa*; ava *misaḥsaḥ*.

س ح ف see ز ح ف : *saḥaf*

س ح ق [1]
سحق *saḥaq (a)* /vt/ **1** to powder, pulverize. *sukkar masḥuuq* powdered sugar. ‖*saḥq il-maɛguun* sanding a prepared surface prior to painting it. **2** to get rid of (s.o.), throw (s.o.) out, finish (s.o.) off. *ʔisḥaq-u bɛiid ʔallaah la-yirgiɛ-u* to hell with him! - vn *saḥq*; ava *saaḥiq*; pva *masḥuuq*.

سحقة *saḥqa* /n pl *-aat*/ **1** instance noun of *saḥq*. **2** mitre saw.

مسحوق *mashuuq* **1** /n pl *-aat, masaḥiiq*/ powder. ‖*mashuuq il-qɪzaaz* glazing powder. **2** *masaḥiiq* /pl n/ make-up (powder, rouge etc.).

سحيق *saḥiiq* /adj/ very far or deep, very distant.

اتسحق *ʔitsaḥaq* or *ʔissaḥaq* /vi/ passive of *saḥaq*. - ava *mitsiḥiq*.

انسحق *ʔinsaḥaq* = *ʔitsaḥaq*. - iva *minsɪḥiq*.

[2] س ح ق

ساحق *saaḥiq* /vi/ to engage in lesbianism. - vn *siḥaaq, misaḥqa*; ava *misaaḥiq*.

سحاق *sɪḥaaq* /n/ lesbianism.

مساحقة *misaḥqa* = *siḥaaq*.

[1] س ح ل

سحلية *siḥliyya* /n pl *saḥaali*/ **1** lizard. ‖*mara zayy is-siḥliyya* a cunning devious female. **2** *[print]* quoin.

[2] س ح ل

سحل *saḥal (a)* /vt/ **1** to torture by dragging over the ground with a rope tied to the legs. **2** to make thin, lean or withered. *ʔil-ɛaya saḥal-u* illness shrivelled him up. - vn *saḥl*; ava *saaḥɪl*; pva *mashuul*.

اتسحل *ʔitsaḥal* or *ʔissaḥal* /vi/ passive of *saḥal*. - iva *mitsiḥɪl*.

انسحل *ʔinsaḥal* = *ʔitsaḥal*. - iva *minsiḥil*.

[3] س ح ل

ساحل *saaḥil* /n pl *sawaaḥil*/ coast, shore.

الساحل *ʔis-saaḥil* /prop n/ district in north Cairo.

ساحلي *saaḥili* /adj/ pertaining to the coast, coastal. *ʔid-dawriyyaat is-saaḥiliyya* coast patrols, coastguard.

سواحلي *sawaḥli* **1** /adj/ pertaining to the coast, coastal. **2** /n pl *-yya*/ a coastal inhabitant.

[1] س ح ل ب

سحلب *saḥlib* /vt/ to move (s.th.) stealthily. *ʔin-naʃʃaal saḥlib ʔiid-u f-maḥfaẓit-ha w-saraq il-qɪrfeen* the pick-pocket slipped his hand into her wallet and got the money. - vn *saḥlaba*; ava *mɪsaḥlib*.

اتسحلب *ʔitsaḥlib* or *ʔissaḥlɪb* /vi/ to move stealthily, creep. *ʔissaḥlibna waraa* we crept after him. - vn *tisaḥliib*; ava *mitsaḥlib*.

[2] س ح ل ب

سحلب *saḥlab* /n/ salep (dried tuber of various species of Orchis); thick, sweet drink made from salep.

س ح ل ف

سحلفة *siḥlifa, suḥlifa* /n pl *-aat, saḥaalif*/ tortoise. - also *silḥifa, sulḥifa, ziḥlifa, zuḥlifa, zilḥifa, zulḥifa*.

س ح ل و ت

سحلوت *saḥluut* /adj/ gay, flighty, frolicsome, light-hearted. *raaḥ iggawwiz bint' saḥluuta f-sinn' wlaad-u* he went and married a flighty girl young enough to be his daughter.

س ح ل و ل

سحلول *saḥluul: ʔumm' saḥluul [abus]* appellation for a vulgar or ugly woman.

س ح ن

سحنة *siḥna* /n pl *-aat, siḥan*/ physiognomy, face. *qalab-li siḥnit-u min ɤeer sabab* he scowled at me for no reason. *ʔeeh is-siḥna l-ɤalaṭ di* what an unpleasant-looking man!

س خ خ

سخ *saxx (u)* <perh Copt> **1** /vt/ to strike, hit, beat. *saxx-u ɛalqa nḍiifa* he gave him a good hiding. **2** /vi/ to pour with rain. *ʔid-dunya kaanit bi-tsuxx* it was raining very hard. - vn *saxaxaan, saxx*; ava *saaxix*; pva *masxuux*.

اتسخ *ʔitsaxx* or *ʔissaxx* /vi/ to be struck, be hit, be beaten. - iva *mitsaxx*.

انسخ *ʔinsaxx* = *ʔitsaxx*. - iva *minsaxx*.

[1] س خ ر

سخر *saxar (a)* /vi/ to jeer, scoff, sneer, laugh (at s.o.). *ma-yṣaḥḥ'-ʃ nisxar min-naas* it is not right for us to make fun of people. - vn *suxriyya*; ava *saaxɪr*.

سخرية *suxrɪyya* /n/ **1** ridicule, sarcasm. **2** laughing-stock.

مسخرة *masxara* /n pl *masaaxir*/ preposterous behaviour, farce. *bala ḍillit ḥaya w-masxara* stop this shameless and outrageous behaviour. see further under

م س خ ر

اتسخر *ʔitsaxar* or *ʔissaxar* /vi/ (impersonal) passive of *saxar*. *ʔil-fuqara ma-yitsixir-ʃ' minhum* the poor are not to be sneered at. - iva *mɪtsɪxɪr*.

[2] س خ ر

سخرة *suxra* /n/ forced labour, corvée.

سخر *saxxar* /vt/ to enslave, subjugate. *bi-ysaxxaru l-ginn" ɛaʃaan yɪɛrafu ʔasraar in-naas* they enslave the jinn in order to know people's secrets. ‖*ʔinta ḥa-*

tsaxxar-ni do you imagine I'm your slave (to order me about so)? - vn *tasxiir*; ava/pva *misaxxar*; pva *musaxxar*↑.

اتسخّر *ʔitsaxxar* or *ʔissaxxar* /vi/ to be subjugated, be enslaved. - iva *mitsaxxar*.

س خ س

سخسخ *ʂaxsax*[1] /vi/ to faint, swoon. *saʁsaxit mit-taʕab* she fainted from weariness. ‖*saxsaxit (ʕala nafs-a-ha) min id-diḥk* she almost died laughing. - vn *saxsaxa*; ava *misaxsax*.

مسخسخ *misaxsax* /adj/ pale, wan, faint. *bamba msaxsax* shocking pink.

سخسخ *saxsax*[2] /adj invar/ fancy (of clothes); *ʃeex il-ʕayqiin illi laabis ig-gibba s-saxsax* the big dandy in the knock-out robe.

س خ ط [1]

سخط *saxaṭ*[1] *(a)* /vt/ to metamorphose. *ʃakl-u masxuuṭ zayy il-qird* he looks as if he's been changed into a baboon. ‖*qaalu ya qird*[i] *raaḥ yisxaṭuu-k - qaal raaḥ yiʕmiluu-ni ʁazaal [prov]* ≈ those who have nothing to lose cannot be hurt. - vn *saxṭ, saxaṭaan*; ava *saaxiṭ*; pva *masxuuṭ*.

سخطة *saxṭa: ya saxṭa* you weak thing! you baby! (insult addressed to an adult who is behaving childishly).

مسخوطة *masxuuṭa* /n pl *masaxiiṭ*/ *[non- Cairene]* idol, small statue used as a charm.

اتسخط *ʔitsaxaṭ* or *ʔissaxaṭ* /vi/ to be metamorphosed. - iva *mitsixiṭ*.

انسخط *ʔinsaxaṭ* = *ʔitsaxaṭ*. - iva *minsixiṭ*.

س خ ط [2]

سخط *saxaṭ*[2] *(a)* /vi/ to become annoyed or angry. *saxaṭit ʕal-ʕiifa wi-lli ʕayfin-ha* she was fed up with everything. - vn *suxṭ*; ava *saaxiṭ*.

س خ ف

سخف *suxf* = *saxaafa*.

سخافة *saxaafa* /n pl *-aat*/ **1** fatuous stupid or asinine behaviour. **2** nasty or disagreeable behaviour.

أسخف *ʔasxaf* /el/ **1** more/most stupid. **2** more/most disagreeable.

سخيف *saxiif* /n pl *suxafa*/ **1** fatuous, stupid, asinine (of people and behaviour). **2** disagreeable, nasty.

سخّف *saxxaf* **1** /vt and vi/ to mock, scorn, denigrate. *baṭṭal tisaxxaf fiyya wi-tsaxxaf raʃy-i quddaam in-naas* stop pouring scorn on me and my opinions in front of people. **2** /vi/ to behave fatuously. - vn *tasxiif*; ava/pva *misaxxaf*.

اتسخّف *ʔitsaxxaf* or *ʔissaxxaf* /vi/ **1** to behave fatuously. **2** to be mocked, be scorned, be denigrated. - ava/iva *mitsaxxaf*.

استسخف *ʔistasxaf* **1** /vt/ **1a** to consider fatuous or stupid. **1b** to consider disagreeable or nasty. **2** /vi/ **2a** to behave fatuously or stupidly. **2b** to behave disagreeably. - ava/pva *mistasxaf*.

س خ م

سخام *suxaam* or *suxaam* /n/ **1** filth, dirt. ‖*ʕiifit is-suxaam* a stinking life. **2** *[women, coarse slang]* (male) sexual organ. — /adj invar/ **3** (also *suxaam iṭ-ṭiin*) rotten, awful. *ʃabuu-ha suxaam iṭ-ṭiin qaal kida* her rotten father said so. *ʃin-naas is-suxaam dool* those lousy people.

سخامة *suxaama* /n/ disgusting thing. *nawlii-ni s-suxaama lli ʕaṭ-ṭarabeeza* hand me over that damned what's-its-name on the table!

أسخم *ʔàsxam* /el/ worse, worst. *ʃil-ʕuzubiyya suxaam wig-gawaaz ʃasxam* the unmarried state is misery but marriage is worse. *ma-sxam min sitt-i ʃilla siid-i [prov]* (my mistress and my master are worse than each other) ≈ six of one and half a dozen of the other.

سخّم *saxxam* /vt/ **1** to soil, dirty. ‖ *ʃinta bi-tsaxxam ʃeeh* what are you muckjng about at? **2**↓ *[coarse]* to fuck. - vn *tasxiim*; ava *misaxxam*.

اتسخّم *ʔitsaxxam* or *ʔissaxxam* /vi/ **1** to be soiled, be dirtied. **2**↓ *[coarse]* to be fucked. - iva *mitsaxxam*.

س خ م ط

سخمط *saxmaṭ* /vt/ **1** to soil, smear, blotch. *saxmaṭ il-waraqa ḫibr* he splotched the paper with ink. *wiff-u msaxmaṭ fukulaata* his face is smeared with chocolate. **2** *[coarse]* to fuck. - vn *saxmaṭa*; ava/pva *misaxmaṭ*.

سخماط *suxmaaṭ* /n/ *[coarse]* form of reference to a worthless person or object.

اتسخمط *ʔitsaxmaṭ* or *ʔissaxmaṭ* /vi/ **1** to become soiled, become smeared. **2** *[coarse]* to be fucked. - vn *tisaxmiiṭ*; ava/pva *mitsaxmaṭ*.

س خ ن

سخن *sixin, suxun (a)* /vi/ **1** to become hot, become warm. *ʃil-mayya b-tisxàn ʕal-butagaaz* the water is heating on the gas. ‖ *ʃil-xinaaqa sixnit qawi* the dispute became extremely heated. **2** to become feverish. *sixint*[i] *naar wi-qaalu di malarya* I became very feverish and they said it was malaria. - vn *suxuuna, sixuuna*; ava *saaxin*.

سخونة *suxuuna, sixuuna* /n/ **1** heat. **2** fever.

سخونيّة *suxuniyya* /n/ **1** heat. **2** fever.

ساخن *saaxin* /adj */ hot, warm.
سخنان *saxnaan* /adj */ feverish.
سخن *suxn* /adj */ **1** warm, hot. *(ʕil-ɛeen) is-suxna* a hot spring about 50 km south of Suez on the west coast of the Red Sea. ‖ *ʕaddii-lu ɛalqa suxna* I'll give him a good hiding. - *mifwaar suxn* burdensome errand. **2** feverish.
أسخن *ʕasxan* /el/ warmer/warmest, hotter/hottest.
سخانة *saxaana* /n pl *-aat*/ = *suxuniyya*.
سخّان *saxxaan* /n pl *-aat*/ **1** water-heater. **2** heating element.
سخّن *saxxan* **1** /vt/ to heat, warm. *saxxani-lna l-ʕakl* heat up the food for us! ‖ *ʕil-mutoor ɛaawiz tasxiin* the engine needs warming up. - *saxxan-lu ɋafaa* give him a burning slap on the neck. - *ma-ysaxxan-ʃ ɋalb-ik [women in trad soc]* may you never grieve! **2** /vi/ to warm up. *nimra talaata barra l-malɛab bi-ysaxxan* player number three is warming up on the sidelines. - vn *tasxiin*; ava/pva *misaxxan*.
تسخينة *tasxiina* /inst n, pl *-aat*/ a (single) heating.
اتسخّن *ʕitsaxxan* or *ʕissaxxan* /vi/ to be heated, be warmed. - iva *mitsaxxan*.
استسخن *ʕistasxan* /vt/ **1** to select for heat or warmth. **2** to consider hot or warm. - ava *mistasxan*.

س خ و see س خ ى : *saxaawa*

س خ ى
سخى *saxi* /adj pl *ʕasxiya*/ liberal, generous. *saxi ɛala l-fuɋara* he is generous to the poor. *ʕid-ha saxiyya* ≈ she is open-handed.
سخاء *saxaaʕˀ* /n/ generosity.
سخاوة *saxaawa* /n/ generosity.

س د ا ب
سدابة *sidaaba* /n pl *sadaayib*/ **1** decorative moulding (of wood, plaster and the like). **2** thin strip of wood (especially that used in decorative moulding).

س د ا ح
سداح *sadaaḥ: sadaaḥ madaaḥ* a state of utter confusion.

س د ا ن see ² س و د : *ʕis-sudaan, sudaani, sudaniyya*

¹ س د ب
سذاب *sadaab* /coll n/ rue, herb of grace (used in folk medicine). - also *sazaab*.
سذب *sadab* = *ʕadaab*. - also *sazab*.

² س د ب see س د ا ب : *sidaaba*

س د د
سدّ *sadd¹ (i)* /vt/ **1** to block, dam, fill. *ʕiṭ-ṭabba bi-tsidd il-banyu* the plug stops up the bath. *kaan fii zaḥma sadda s-sikka* there was a crowd blocking the way. *ʕil-ɛummaal saddu l-ḥufra lli fiʃ-ʃariɛ* the workers filled the hole in the road. *ʕil-baab illi yiigi minnu r-riiḥ sidd-u wi-stiriiḥ [prov]* ≈ stop up the source of trouble and relax. ‖ *ma-tsidd-haa-ʃ* don't be pessimistic, don't give up hope. - *bi-ysidd-a-ha f-wiʃʃ-i-na* he's driving us up the wall. - *sadd in-nifs* to take away the appetite, dampen one's enthusiasm, as in *ḥaaga tsidd in-nifs* something that really puts you off, *nifs-i masduuda ɛan il-ʕakl* I have no appetite for food, *buxl-u sadd' nifs-i ɛan id-dinya* his stinginess has made me sick of life. - *sadd' xaana* to act as a (mere) stopgap, fill in for one more competent or better qualified, as in *gibnaa ysidd' xaana mwaɋɋat ɛala ma nlaaɋi waaḥid ɛidil* we brought him in just as a temporary stopgap till we could find someone decent. - *ḥaara sadd* blind alley, cul-de-sac. - *sadd il-ḥanak* pudding of flour, sugar and butter. **2** to pay (a debt, a bill). *sidd illi ɛaleek liyya* pay what you owe me. — /vt and vi/ **3** to suffice (for), be enough (for). *ʕil-mahiyya ma-bi-tsidd'-ʃ ḥaaga* the salary isn't enough for anything. *tamwiin iʃ-ʃahr' ma-bi-ysidd'-ʃ (ʕusbuuɛ)* the monthly ration isn't enough (to cover a week). — /vi/ **4** to be dependable, be reliable. *bi-ysiddu f-waɋt iz-zanɋa* they may be relied upon in a tight fix. *raagil il-beet laazim yimla markaz-u - laazim yisidd* the man of the house must live up to his position; he must be dependable. - vn *sadd, sadadaan*; ava *saadid*; pva *masduud*.
¶ *sadd' maṭraḥ* to fill in for, substitute for. *ʕil-ɛasal yisidd' maṭraḥ is-sukkar* honey is a substitute for sugar.
سدّ *sadd²* /n pl *suduud*/ **1** block, obstruction. **2** dam. *ʕis-sadd il-ɛaali* the High Dam (at Aswan).
سدّ *sadd³: sadd' sadd* hush now! stop crying! (to a child).
سدّة *sadda¹* /inst n, pl *-aat*/ an obstruction, an obstacle, a barricade. ‖ *saddit iʃ-ʃiryaan* or *ʕis-sadda f-ʃiryaniyya [path]* embolism.
سدّة *sidda* /n pl *sidad*/ **1** mat of dried reeds used for roofing and as walls. **2** partition.
سدد *sadad* /n pl *suduud*/ = *sadd*.
أسدّ *ʕasadd* /el/ more/most pertinent, relevant, or correct.
سداد *sadaad: sadaad ir-raʕy* level-headedness, judiciousness, correctness.
سداد *sudaad* /n/ obstruction. *bi-yɋaasi min sudaad fi-manaxiir-u* he suffers from an obstruction in his nose.
سدادة *sidaada* /n pl *-aat*/ cork, stopper.

سديد *sadiid* /adj/ pertinent, right, relevant, correct. *raʃy[i] sadiid* correct opinion.

سدّاد *saddaad* **1** /n * and pl *saddaada*/ filler-in, stand-in, stopgap. **2** /adj */ standing-in (for s.o. or s.th.). ‖*raqabt-i saddaada* I'll do it for you no matter what the cost.

سدّادة *saddaada* /n pl *-aat*/ plug, stopper.

مسدّ *masadd: sadd[i] masadd* to fill in for, stand in for. *bi-ysidd[i] masadd axuu* he stands in for his brother.

اتسدّ *ʃitsadd* or *ʃissadd* /vi/ **1** to be blocked, be stopped up. *mawasiir il-magaari tsaddit min iz-zibaala* the drains became blocked with rubbish. ‖*kull[a] ħaaga tsaddit fi-wiff-i* I was at a loss as to what to do, I was blocked at every turn. **2** to be paid (of a debt or bill). *ʃil-filuus ma-tsaddit-f[i] lissa* the money hasn't been paid yet. **3** to stop talking, shut up. *ʃitsadd* belt up! - ava/iva *mitsadd*.

انسدّ *ʃinsadd* = *ʃitsadd*. - vn *ʃinsidaad*; ava/iva *minsadd*.

سدّد *saddid* /vt/ **1** to block off completely. *saddidu kull is-sikak ʁafaan il-mawkib yifuut* they blocked off all the roads so that the procession could pass. ‖*saddid (il-ʃabwaab) fi-wiff-(u)* to slam the door in someone's face, refuse to co-operate, as in *kunt[a] ʁaawiz ʃaqul-lak ħaaga laakin saddidt il-ʃabwaab fi-wiff-i* I wanted to tell you something, but you would have nothing to do with me. **2** to pay (what is due). *ma-maʁuu-f filuus yisaddid biiha l-gumruk* he doesn't have money to pay the customs duty. **3** to fill in (a form, a register etc.). *saddid id-dafaatir ʠabl[i] ʃaaxir if-ʃahr* make up the books before the end of the month. - vn *tasdiid*; ava/pva *misaddid*.

اتسدّد *ʃitsaddid* or *ʃissaddid* /vi/ passive of *saddid*. - iva *mitsaddid*.

س د ر [1]

سدر *sidr[1]* /coll n/ *[bot]* **1** variety of Christ's thorn (Zizyphus spina Christi). **2a** lotus tree. **2b** lotus blossom.

سدرة *sidra[1]* /pl *sidar, -aat*/ unit noun of *sidr[1]*. ‖*sidrit il-muntaha [Isl]* the (lotus) tree in the seventh heaven. *waṣal l-sidrit il-muntaha* he attained the highest goal, he achieved supreme results.

س د ر [2]

سدرة *sidra[2]: haati ya sidra waddi ya midra [prov]* ≈ what one hand does, the other undoes.

سدريّة *sidriyya* /n pl *-aat*/ large metal washing-up bowl.

س د ر [3] see **ص د ر** : *sidr[2], sidri, sidriyya, sideeri*

س د س

سدس *suds* /n pl *ʃasdaas*/ one sixth, a sixth part. ‖*ʃaalit is-suds* sextant. - *(ʠarab) ʃaxmaas fi-ʃasdaas* (to be in) a state of bewilderment.

سداسي *sudaasiˀ* /n pl *-yyaat*/ sextet.

سادس *saadis* /adj/ sixth.

سدّس *saddis* /vt/ **1** to mutiply by six, make sixfold. **2** to make hexagonal. - vn *tasdiis*; ava/pva *misaddis*.

مسدّس *musaddas* /n pl *-aat*/ **1** hexagon. **2** hand gun, pistol (or gun-like device). *musaddas raff* spray-gun. *musaddas mayya* water-pistol. *musaddas ʂoot* starting pistol. — /adj/ **3** (also *misaddis*) hexagonal.

س د غ see **ص د غ** : *sidɣ, sadɣ, sidiɣ, ʃasdaɣ, saddaɣ, ʃistasdaɣ*

س د ق see **ص د ق** : *sadaq, sadq, saadiq, sadaqa, ʃasdaq, sadaaqa, misdaaq, saddaq, ʃitsaddaq*

س د ل [1]

سدل *sadal (i)* /vt/ to let hang or fall. *bi-tisdil ʠafayir-ha ʁala ktaf-ha* she wears her braids hanging down on her shoulders. - vn *sadl*; ava *saadil*; pva *masduul*.

سدلة *sadla* /n pl *-aat*/ **1** instance noun of *sadl*. **2** curtain, veil.

اتسدل *ʃitsadal* or *ʃissadal* /vi/ **1** to hang down, fall down. **2** passive of *sadal*. - ava/iva *mitsidil*.

انسدل *ʃinsadal* = *ʃitsadal*. - ava/iva *minsidil*.

س د ل [2] see **س د ی ل** : *sidiil*

س د ی

سدى *sada (i)* /vt/ *[text]* to thread (a warp). - vn *sady, sida*; ava *saadi*; pva *masdi*.

سدا، سدى *sida* /n/ *[text]* warp.

سدوة *sidwa* /n/ *[text, obsol]* a warp thread.

مسديّة *masdiyya* /n pl *masaadi, masdiyyaat*/ *[text]* a warp thread.

اتسدى *ʃitsada* or *ʃissada* /vi/ passive of *sada*. - iva *mitsidi*.

سدّى *sadda[2]* = *sada*. - vn *tasdiyya*; ava/pva *misaddi*.

مسدّى *misaddi* /n */ *[text]* operator of a warping machine.

اتسدّى *ʃitsadda* or *ʃissaḍda* /vi/ passive of *sadda*. - iva *mitsaddi*.

س د ی ل

سديل *sidiil* <perh It *sedile*> /n pl *-aat, sidíla*/ lavatory seat...

س ذ ب see س د ب [1] and س ز ب

س ذ ج see س ز ج

س ر ا د ق

سرادق *suraadiq* or *suraadiqˀ* /n pl *-aat*/ temporary pavilion of appliquéed or patterned cloth set up in a public place for funeral receptions or other large gatherings.

س ر ا ى

سراية *saraaya* <P *sarây*> /n pl *-aat*/ **1a** palace. ‖ *ʒeef is-saraaya* sweet consisting of a kind of sponge cake soaked in syrup. **1b** large house, manor house. **2** *ʕis-saraaya* (also *ʕis-saraaya ʂ-ʂafra*) madhouse, nuthouse. *laazim yiwadduu s-saraaya ʂ-ʂafra* he ought to be locked up, he belongs in a nuthouse.

س ر ب

سرب *sirb* /n pl *ʕasraab*/ **1** flock (of birds). **2** squadron (of aircraft).

سربانى *surabaati* /n pl *-yya*/ one who cleans drains and cesspools.

سراب *saraab* /n/ mirage.

مسرب *masrab* /n pl *masaarib*/ course, path (of a stream).

مسراب *musraab* /n pl *masariib*/ rain drain, sewer. - also *muzraab*.

سرّب *sarrab* /vt/ **1** to cause or allow to leak out. *ʕik-kuuz bi-ysarrab mayya* the tin mug leaks water. ‖ *ʕil-muwaẓẓaf sarrab il-xabar* the employee leaked the news. **2** to convey secretly, smuggle. *sarrab ik-kalb min il-beet* he smuggled the dog out of the house. – /vi/ **3** to be leaky. *ʕil-ħigaara bi-tsarrab* the batteries leak. -vn *tasriib, tasriib*; ava *misarrab*.

تسريبة *tasriiba* /inst n, pl *-aat*/ **1** a way of slipping out. *ʃufnaa-lu tasriiba ʕafaan nitxallaṣ minnu* we found a way to get him off our backs. **2** a (skilful) dribbling or weaving manoeuvre (in soccer).

اتسرّب *ʕitsarrab* or *ʕissarrab* /vi/ **1** to leak, seep, be leaked. *ʕil-mayya tsarrabit fir-ramla* the water seeped into the sand. **2** to convey oneself or be conveyed secretly, be smuggled. *ʕil-mugrim itsarrab minhum* the criminal gave them the slip. *ʕil-biḍaaʕa tsarrabit min il-markib* the goods were smuggled off the ship. - ava/iva *mitsarrab*.

س ر ب ع

سربع *sarbaʕ* /vt/ to fluster, rush and agitate. *ʕil-mudiir misarbaʕ-ni ʕal-waraça di* the director has got me into a flap over this paper. - vn *sarbaʕa*; ava *misarbaʕ*.

اتسربع *ʕitsarbaʕ* or *ʕissarbaʕ* /vi/ **1** to be flustered. **2** to throw a tantrum. - vn *tisarbiiʕ*; ava/iva *mitsarbaʕ*.

س ر ب ن

سربنتينة *sarabintiina* <It *serpentina*> /n pl *-aat*/ coil (of, e.g., a refrigerator or water-heater).

س ر ت

سرت *sart* /coll n/ small immature fruit(s) or vegetable(s).

سرتاية *sartaaya* /unit n, pl *-aat*/ a small immature fruit or vegetable.

س ر ت ن

سرتن *sartin* <Engl *thirty-one*> /vi/ *[coarse]* to masturbate, jerk off. - vn *sartana*; ava *misartin*.

س ر ت ى ن

سرتينة *sartiina* <It *sentina*> /n/ bilge, bilge water. *bumba sartiina* bilge pump. - also *santiina*.

س ر ج [1]

سرج *sarag (i)* /vt/ to saddle. *ʕisrig-li l-ħuṣaan* saddle the stallion for me. - vn *sarg*; ava *saarig*; pva *masruug*.

سرج *sarg* /n pl *suruug*/ saddle.

سرجى *sargi: ʕiʃ-ʃariiça s-sargiyya [athl]* the straddling style (in the high jump).

سروجى *suruugi* /n pl *-yya*/ saddler. ‖ *suruugi sayyaraat* car upholsterer.

اتسرج *ʕitsarag* or *ʕissarag* /vi/ to be saddled. - iva *mitsirig*.

سرّج *sarrig* = *sarag*. - vn *tasriig*; ava/pva *misarrig*.

اتسرّج *ʕitsarrig* or *ʕissarrig* /vi/ passive of *sarrig*. - iva *mitsarrig*.

س ر ج [2]

سراجة *siraaga* [1] /n/ **1** /vn/ basting, tacking. **2** /pl *-aat*/ manner of basting.

سرّج *sarrag, sarrag* /vt/ *[needlew]* to baste, tack. - vn *tasriig, tasriig*; ava/pva *misarrag, misarrag*.

اتسرّج *ʕitsarrag, ʕitsarrag* or *ʕissarrag, ʕissarrag* /vi/ passive of *sarrag*. - ava/iva *mitsarrag, mitsarrag*.

س ر ج [3]

سرج *sarag (i)* /vi/ to strike (of lightning). ‖ *ḍarab-ni ça lam xalla ʕeen-i saragit* he gave me a slap that made me see stars. - vn *saragaan*; ava *saarig*.

سراج *siraag* /n pl *ʕasriga, siríga*/ oil lamp.

مسرجة *misriga* /n pl *masaarig*/ = *siraag*.

[4] س ر ج
سرجة *sarga:* ʕabu sarga St. Sergius. *kiniisit ʕabu sarga* the Church of St. Sergius in Old Cairo, believed to be built on the site of the Holy Family's refuge in Egypt.
سراجة *siraaga*[2] /n/ *[vet]* equine lymphangitis.

[5] س ر ج see س ى ر ج : *sirga*

س ر ح
سرح *saraḥ (a)* /vi/ **1** to go about in search of one's livelihood (of, e.g., an itinerant peddler, day labourer, beggar). *bi-yisraḥ bi-tirmis wi-b-yisqi n-naaś mayya* he goes about peddling lupin and offering people water to drink. ‖ *ʕisraḥ* go away! (to a beggar). - *naḥl*[i] *saariḥ* worker bees. **2** to go to pasture, graze (of animals). **3a** to wander, stray (of the mind). *ʕaql-u saariḥ ʕala ʕadt-u* he's daydreaming as usual. *xayaal-u saraḥ* his imagination wandered. ‖ *ma-tisraḥ-ʃ*[i] *biyya* don't try and fool me! **3b** to ruminate, reflect. *qareet il-xabar da w-saraḥt*[i] *fii ʃwayya* I read that news and turned it over in my mind a bit. **4a** to go further than intended as a result of inattention. *kunt*[i] *raayiḥ lil-baqqaal laakin saraḥt*[i] *baʕd*[i] *minnu ktiir* I was going to the grocer but wandered far beyond without realizing. *ʕiwʕa l-azmiil yisraḥ minnak* mind the chisel (that you are wielding) doesn't slip! *ʕis-sikkiina saraḥit min ʕiid-i qaṭaʕit wiff il-laḥma* the knife slipped in my hand and cut the top of the meat. **4b** to continue further (than originally planned). *kunt*[i] *ʕarkab li-ḥadd it-taḥriir wi-ʏayyart*[i] *muxx-i w-saraḥt*[i] *kamaan fiwayya* I was going to ride as far as Tahrir Square, but changed my mind and went on a bit. ‖ *da saraḥ wi-baraḥ* ≈ he's come up in the world. - *saraḥit wi-maraḥit* she went her happy way, she lived it up. - vn *saraḥaan*; ava *saariḥ*.
سرحان *sarḥaan* /adj */ distracted, absent-minded.
سرح *siriḥ* /adj */ tall and straight.
سرّاح *sarraaḥ* /n */ **1** yarn-spinner. **2** daydreamer. — / adj */ **3** loose, free-living. ‖ *bitt*[i] *sarraaḥa* an easy girl, a flirt. *mara sarraaḥa [coarse, abus]* an easy lay, a whore.
سرّيح *sarriiḥ* /n pl *sarriiḥa*/ **1** itinerant peddler. **2** braggart.
مسرح *masraḥ* (also *marsaḥ*↓ *[obsol]*) /n pl *masaariḥ*/ **1** theatre. **2** stage. **3** theatre, theatrical art. *ʕil-masraḥ wis-sinima* stage and film.
مسرحي *masraḥi* /adj/ pertaining to the theatre or stage, theatrical.
مسرحيّة *masraḥiyya* /n pl *-aat*/ stage play.
سرّح *sarraḥ* /vt/ **1** to send out to pasture. *ʕiṣ-ṣubḥ*[i] *laazim tisarraḥ il-gamuusa* in the morning she has to put the buffalo out to pasture. **2** to send (peddlers, beggars etc.) out to work. *ʕil-miʕallim bi-ysarraḥ ʕiyaal sabarsagiyya* the boss sends kids out to work as cigarette-butt collectors. *ʕir-raagil sarraḥ miraat-u b-figl*[i] *w-kurraat* the man sent his wife out to hawk radishes and leeks. ‖ *misarraḥ miraat-u* having his wife working as a prostitute. **3** to tidy and arrange (the hair). *xallii-ha tsarraḥ ʃaʕr-ik* (or *raas-ik*) let her do your hair. - vn *tasriiḥ*; ava/pva *mṣarraḥ*.
تسريحة *tasriiḥa* /n pl *-aat*/ **1a** instance noun of *tasriiḥ*. **1b** hair-do. **2** dressing table.
اتسرّح *ʕitsarraḥ* or *ʕissarraḥ* /vi/ **1** passive of *sarraḥ*. **2** to have one's hair done. - iva *mitsarraḥ*.

س ر خ
صرخ *sarax, ṣarax (u)* /vi/ to scream, cry out, shout. *ʃaafit ig-gussa w-saraxit* she saw the corpse and screamed. *ḥamdi sarax ʕalee* Hamdi shouted to him. *sarax ir-raagil fi-wiff-u-hum* the man yelled at them. - vn *sarx, ṣarx, siriix, suraax, ṣuraax*; ava *saarix, ṣaarix*.
صرخ *sarx, ṣarx* /n/ screaming. ‖ *raas-i fiiha sarx* my head is ringing. - *rigl-i fiiha sarx* my leg hurts terribly.
صرخة *sarxa, ṣarxa* /inst n, pl *-aat, -aat*/ a scream, a cry, a shout.
ساروخ، صاروخ *saruux* or *ṣaruux* /n pl *sawariix*/ rocket. ‖ *lamba saruux* crude kerosene lamp of metal with no chimney (see Pl.B, 2).
صرّيخ *sarriix* /n/: *sarriix ibn*[i] *yomeen* /in neg context/ ≈ a living soul, as in *baṣṣeet yimiin wi-ʃmaal ma-laqet-ʃ*[i] *sarriix ibn*[i] *yomeen* I looked right and left but found not a living soul.
صرّخ *sarrax* or *ṣarrax* /vi/ to scream. - ava *misarrax, miṣarrax*.

[1] س ر د
سرد *sarad (u, i)* /vt/ to relate, narrate. *balaaʃ tisrid il-ḥikaaya mil-ʕawwil* don't tell the story from the beginning. - vn *sard, saradaan*; ava *saarid*; pva *masruud*.
اتسرد *ʕitsarad* or *ʕissarad* /vi/ to be related, be narrated. - iva *mitsirid*.
انسرد *ʕinsarad* = *ʕitsarad*. - iva *minsirid*.

[2] س ر د see ب ا ك : *sird*[i] *baak*

س ر د ا ب
سرداب *sirdaab* <P *sard-âb*> /n pl *saradiib*/ subterranean vault, cellar, basement.

س ر د ا ر
سردار *sirdaar* <P *sar-dâr*> /n/ *[obsol]* supreme commander, commanding general.

س ر د ق see س ر ا د ق : *suraadiq, suraadiq*

س ر د ل ل

سردلا *sardilla* <prob It *sardella*> /coll n/ Mediterranean fish (Sardinella aurita, Sardinella eba).

سردلاية *sardillaaya* /unit n, pl *-aat*/ a fish of the *sardilla* species.

س ر د ي ن [1]

سردين *sardiin* /coll n/ **1** sardine(s). **2** Nile fish resembling sardines.

سردينة *sardiina* /pl *-aat*/ unit noun of *sardiin*.

سرديناية *sardinaaya* = *sardiina*.

س ر د ي ن [2]

سوردينا *surdiina* <It *sordina*> /n pl *-aat*/ *[mus]* mute, sordino (for violin, cornet etc.).

س ر ر [1]

سرّ *sarr[1] (u)* /vt/ to please, make happy. ‖*ħaaga ma-tsurr'-ſ la ɛaduw wala ħabiib* ≈ it shouldn't happen to a dog. - vn *suruur*; ava *saarir, saarir*; pva *masruur, masruur*.

سرور *suruur* /n/ pleasure, joy. *bi-kull' suruur* with the greatest pleasure, as in *ħ-aɛmil-haa-lak bi-kull' suruur* I'll be delighted to do it for you.

سرّاء *sarraaſˁ* /n/ happiness, prosperity. *fis-sarraaſ wiq-ḍarraaſ* ≈ for better or for worse.

مسرّة *masarra* /n pl *-aat*/ joy, delight, pleasure, happiness. *nigii-lak dayman fil-masarraat* may we always visit you on happy occasions. ‖... *wa-fin-naas il-masarra [Chr]* ... good will towards men.

انسرّ *ſinsarr* /vi/ to feel happy, glad or delighted. *ſana b-ansarr' lamma b-afuuf-ak* I feel happy whenever I see you. - iva *minsarr*.

س ر ر [2]

سرّ *sarr[2] (i)* /vt/ **1** to entrust (a secret). *sarrit kilma f-widn-u* she told him something secret in his ear. **2** to withhold (a secret). *sarreet il-xabar fi-nafs-i* I kept the secret to myself. - ava *saarir*.

سرّ *sirr* /n pl *ſasraar*/ **1a** secret. ‖*ſil-biyuut ſasraar* every house has its secrets. - *ɛaalim il-ſasraar* Ommiscient (epithet of God). - *kaatim ſasraar [mil]* secretary. - *kilmit is-sirr [mil]* password. - *sirr-ak fi-biir* ≈ (be sure) your secret will be well kept. - *ɋal-lu l-ɋill' w-taɛab is-sirr* to hell with him and what he said. **1b** spirit, inner being. *ɋult' f-sirr-i* I said to myself. *kilma f-sirr-ak* just a word in your ear. *ſallaaħ yihaddi s-sirr* may God calm the (troubled) mind. *wi-fin-nihaaya ţiliɛ* (or *xarag*) *is-sirr il-ſilaahi* ≈ at last, he died. **1c** spiritual power. *sirr-u baatiɛ* his spiritual power is effective. *fii sirr* he's psychic. **2a** (divine) mystery. ‖*yiwḍaɛ sirr-u f-ſaḍɛaf xalɋ-u* (God) may reveal Himself in the weakest of His creatures. **2b** *[Chr]* sacrament. *sirr il-iɛtiraaf* the sacrament of confession.

¶ *sirran* /adv/ privately, inaudibly. *ſaħyaanan bi-nṣalli li-llaah sirran* we sometimes pray to God inaudibly (or privately).

سرّي *sirri* /adj/ **1** secret, confidential. *taɋariir sirriyya* confidential reports. *sirri lil-ɣaaya* top secret. ‖*ħibr' sirri* invisible ink. - *beet sirri* brothel. - *ſamraaḍ sirriyya* venereal diseases. - *ſil-ɛaada s-sirriya [euphem]* masturbation. **2** *[Chr]* **2a** mystical. *lahoot sirri* mystical theology. **2b** sacramental.

سريرة *sariira* /n pl *saraayir*/ mind, heart, conscience. *rabb-i-na ſaɛlam bis-saraayir* God knows the heart of every one.

أسرّ *ſasarr* = *sarr[2]*. - vn *ſisraar*.

س ر ر [3]

سرّة *surra* (also *ṣurra*) /n pl *surar*/ **1** navel. *burtuɋaan ſabu surra* (or *bi-surra*) navel oranges. *ħizaam surra* umbilical truss. **2** centre. *bet-hum fi-surrit il-balad* their house is located in the centre of the village. ‖*surrit ir-raffaaṣ [naut]* propeller post.

سرّي *surri* /adj */ umbilical. *ſil-ħabl is-surri* umbilical cord.

س ر ر [4]

سرير *siriir* /n pl *saraayir*/ bed. ‖*siriir markib* stern bench of a boat.

س ر ر ا ق

سرّاق *sirraaɋ, sarraaɋ* <perh It *saracco*> /n pl *sarariiɋ*/ *[carp]* saw. *sirraaɋ timsaaħ* panel saw.

س ر ر ي ق

سريّق *surreeɋ* /coll n/ chrysalis(es).

سريّقة *surreeɋa* /unit n, pl *-aat*/ a chrysalis.

س ر س [1]

سرّس *sarras* /vi/ to become wormy, become weevily. *ſig-gibna sarrasit* the cheese has become wormy. - vn *tasriis*; ava *misarras*.

س ر س [2]

سرس *sirs* /coll n/ rice awn(s).

سرسة *sirsa* /unit n, pl *-aat*/ a rice awn.

سرساية *sirsaaya* = *sirsa*.

س ر س [3] see س ر ى س : *siriis*

س ر س ب
سرسب *sarsib* **1** /vt/ to cause to trickle, leak. *ʕiz-zikiiba fiiha xurm[i] bi-ysarsib il-ɑamḥ* the sack has a hole which lets the wheat trickle out. **2** /vi/ to dribble, trickle. *ʕil-ḥanafiyya bi-tsarsib* the tap is dripping. *ʕiḍ-ḍuyuuf gum sarsaba* the guests trickled in. - vn *sarsaba*; ava/pva *misarsib*.
سرسوب *sarsuub* /n/ **1** colostrum. **2** /pl *sarasiib*/ trickle. *ʕil-mayya nazla sarasiib* the water trickles down.
اتسرسب *ʕitsarsib* or *ʕissarsib* /vi/ **1** to be made to trickle, be leaked. **2** to trickle, leak. *ʕil-mayya ɑaɛadit titsarsib ṭuul il-leel* the water kept dripping all night. - vn *tisarsiib*; ava/iva *mitsarsib*.

س ر س ع
سرسع *sarsaɛ* /vi/ to sound shrill. *wi-hiyya b-titkallim bi-tsarsaɛ* she speaks in a shrill voice. - vn *sarsaɛa*; ava *misarsaɛ*.

س ر س و ع
سرسوع *sarsuuɛ* /coll n/ sissoo tree(s).

س ر س ى -
سرسيون *sirisyoon* /n/ a type of glue used to repair rubber and leather.

س ر ط ن
سرطان *saraṭaan* /n/ **1** /coll/ crab(s). **2** *ʕis-saraṭaan [astrol]* Cancer. **3** *[path]* cancer. ‖*saraṭaan il-ɑizaaz* deterioration of glass caused by heat or stress and leading to spontaneous shattering.

س ر ع
سرع *surɛ* /n pl *ʕasraaɛ*/ (set of) reins.
سرعة *surɛa* /n pl *-aat*/ **1** speed. *ʕil-ʕusṭawanaat liiha talat surɛaat* records have three speeds. *bi-surɛa* quickly. *ɛaddaad is-surɛa* speedometer. **2** *[auto]* gear. ‖*naɑl is-surɛaat il-ʕutumatik* automatic transmission.
سريع *sariiɛ* **1** /adj pl *suraaɛ*/ swift, fast, quick. *sariiɛ il-kasr* quick to break. *tayyaar sariiɛ it-taraddud [elec]* high frequency current. **2** *ʕis-sariiɛ* /n/ express train or bus.
أسرع *ʕasraɛ* [1] /el/ faster/fastest.
اتسرّع *ʕitsarraɛ* or *ʕissarraɛ* /vi/ to be too hasty, rush. *ʕana kull[i] ɑaṣd-i ʕinnak ma-kunt[i]-ʃ titsarraɛ* I only meant that you shouldn't have been hasty. - vn *tasarruɛ*; ava *mitsarraɛ*.
متسرّع *mutasarriɛ*↑ /adj */ rash, hasty, precipitate.

أسرع *ʕasraɛ* [2] /vi/ to speed up, accelerate. - vn *ʕisraaɛ*; ava *musriɛ*.

س ر ف [1]
أسرف *ʕasraf* /vi/ to go too far, be extravagant. *ʕinta ʕasraft[i] f-ɛitaab-u* you went too far in reprimanding him. - vn *ʕisraaf*; ava *musrif*.

س ر ف [2]
سرف *sirf* <Engl> /n pl *-aat*/ serve, service (e.g., in tennis).

س ر ف ل
سرفليه، سرفيليه *sarfileeh* <Fr *surfiler*> /n/ hem-stitching. ‖*maɑaṣṣ[i] sarfileeh* pinking shears.
سرفل *sarfil* /vt/ to hem-stitch. - vn *sarfala*; ava/pva *misarfil*.
اتسرفل *ʕitsarfil* or *ʕissarfil* /vi/ to be hem-stitched. - vn *tisarfiil*; iva *misarfil*.

س ر ف ى س [1] see also س ر و س
سرفيس *sarviis* or *sirviis* <Fr *service*> /n/ **1a** (also *ṭaqm[i] sarviis*) set of china. **1b** (also *ṣaḥn[i] sarviis*) serving platter. **1c** dining implements, table setting (china, silver, napkins etc.). *ʕaḥuṭṭ[i] sirviis li-kaam* how many shall I lay the table for? ‖*ṭarabeezit sarviis* dumb waiter, auxiliary serving table. **2** locker.

س ر ف ى م
سيرافيم *sirafiim* <Heb> /pl n/ *[Chr]* seraphim.

س ر ف ى - see س ر ف ل : *sarfileeh*

س ر ق [1]
سرق *saraɑ (a)* /vt/ **1** to steal. *saraɑu ghaaz tasgiil wi-ʃwayyit hiduum* they stole a tape-recorder and a few clothes. *bi-yisraɑ il-kuḥl[i] min il-ɛeen* he could steal the kohl from your eyes! *ʕilli ɛaawiz yisraɑ gamal yiḥaḍḍar-lu kimaama [prov]* (he who wants to steal a camel should have a muzzle ready for it) ≈ good planning ensures success. *ʕin saraɑt israɑ gamal [prov]* (if you steal, steal a camel) ≈ if you must steal take something worthwhile. ‖*wiʃʃ-a-ha yisraɑ il-ɛeen* her face captivates the eye. *-sarɑaa s-sikkiin* ≈ he's lost touch with reality, he lives in a world of false hopes. *-door masruuɑ* mezzanine, entresol. *-ruḥt[i] masruuɑ min wiṣṭiihum rawwaḥt[a] ɛal-beet* ≈ I slipped away from their company and went home. **2** to rob. *saraɑu bank[i] w-hirbu* they robbed a bank and got away. *saraɑt-u f-ɑirf[i] saar* I robbed him of a piastre. ‖*bi-yisraɑ fil-liɛb*

he cheats at the game. - vn *sirqa*; ava *saariq*; pva *masruuq*.

سرقة *sirqa* **1** /n pl *sariqaat*/ theft, robbery. *sirqa bil-ʃikraah* armed robbery. **2** /adv/ stealthily. *rawwaḥ sirqa* he went home without anyone noticing. *bi-yaakul sirqa* he eats on the sly.

مسروقات *masruqaat* /pl n/ stolen goods.

سريقة *siriiqa* /n pl *-aat*/ = *sirqa*.

اتسرق *ʃitsaraq* or *ʃissaraq* /vi/ **1** to be stolen. *ʕarabiyyit-i tsaraqit mif-faariʕ* my car was stolen off the street. **2** to be robbed. *beet-i tsaraq* my house has been burgled. **3** to steal away. ‖ *ʃitsaraqit mil-beet min ʏeer ma ḥadd' ʃaf-ha* she sneaked out of the house unseen by anybody. - ava/iva *mitsiriq*.

انسرق *ʃinsaraq* = *ʃitsaraq*. - ava/iva *minsiriq*.

س ر ق [2] see **س ر ر ا ق**: *sirraaq, sarraaq*

س ر ق [3] see **س ر ر ى ق**: *surreeq, surreeqa*

س ر ك [1]

سيرك *sirk, sark* <Fr *cirque*> /n/ circus.

س ر ك [2]

سركى *sarki* <T *sergi*> /n pl *saraaki*/ register book for messenger-delivered dispatches. *sallim-hum ig-gawabaat ʕas-sarki* have them sign for their letters in the mail-delivery book.

سرّك *sarrak* /vt/ to register (mail, dispatches or official letters) in the register book. - vn *tasriik*; ava/pva *misarrak*.

اتسرّك *ʃitsarrak* or *ʃissarrak* /vi/ passive of *sarrak*. - iva *mitsarrak*.

س ر م ح

سرمحة *sarmaḥa* /vn/ loitering, loafing.

سرماح *sirmaaḥ* /n */ loiterer, loafer.

اتسرمح *ʃitsarmaḥ* or *ʃissarmaḥ* /vi/ to loaf around, loiter about. *ʃatsarmaḥ fif-fawaariʕ w-ahallis fiwayyiteen* I'm going to hang around the streets and chase some crumpet. - ava *mitsarmaḥ*.

س ر ن see **س ر ى ن**: *sariina*

س ر ن ج

سرنجة *siringa* <It *siringa*> /n pl *-aat*/ syringe.

س ر و [1]

سرو *sarw* /coll n/ evergreen cypress. *xaʃab sarw* cypress wood.

سروة *sarwa'* /n pl *-aat*/ **1** /unit n/ a cypress. **2** a panel shaped like a diamond with one elongated point, used in *ḥaʃw' baladi* (see Pl.G, 10).

س ر و [2]

ثروة *sarwa²* /n/ **1** wealth, abundance. *ma-yhimm-i-nii-ʃ il-maal wis-sarwa* I don't care about money and riches. *yaklu fis-sana sarwa min il-ʕamḥ* they consume an enormous quantity of wheat in a year. **2** /pl *-aat*/ treasure. *sarwaat tarixiyya* historical treasures.

س ر و س see also **س ر ف ى س**

سرويس *sarwiis* <Fr *service*> /n pl *sarawiis*/ **1a** (also *ṭaqm sarwiis*) set of china. **1b** (also *ṣaḥn' sarwiis*) serving platter. **2** government telegram, official telegram sent at the expense of a government department.

سروس *sarwis* /vt/ to serve. *ʕayz-ak tisarwis il-ḥilw' dilwaqti* I want you to serve the dessert now. - vn *sarwasa*; ava/pva *misarwis*.

اتسروس *ʃitsarwis* or *ʃissarwis* /vi/ passive of *sarwis*. *ʃil-ʕaʃa tsarwis* dinner has been served. - iva *mitsarwis*.

س ر و ل

سروال *sirwaal* (also *firwaal*) /n pl *sarawiil*/ **1** loose breeches or trousers gathered at the waist and very full in the seat (worn by men of the Mediterranean coast). **2** loose pantaloon-type trousers worn by the more traditional women of the Egyptian countryside.

مسروال *misarwil: ḥamaam misarwil* variety of pigeon which has feathers on its legs.

س ر ى [1]

سرى *sara (i)* /vi/ **1** to apply, be applicable. *ʃil-qanuun da ma-yisrii-ʃ ʕalee* this law doesn't apply to him. **2** to spread. *ʃil-ʃalam bi-yisri f-kull' gism-i* the pain spreads all over my body. *ḥubb-a-ha b-yisri f-damm-u* love for her runs in his blood. *ʃiṣ-ṣoot bi-yisri fil-leel wid-dinya sakta* ≈ the sound carries at night when all is silent. ‖ *maṭraḥ ma yisri yimri* ≈ may it do you good! (to a guest after eating). - vn *sarayaan, sarayaan*; ava *saari*.

ساري *saari²* /adj/ **1** operational, operative. ‖ *saari l-mafʕuul* valid, in force. **2** rampant (of, e.g., a contagious disease).

سريّة *sariyya* /n pl *saraaya, sariyyaat/ [mil]* company of soldiers.

إسراء *ʃisraaʃ↑, ʃisra: ʃisraaʃ in-nabi, ʃal-ʃisraaʃ (wal-miʕraag) [Isl]* the Prophet Muhammad's night journey to Jerusalem (and the seven heavens).

[2] س ر ي
سرّى *sarra* /vt/ to dispel, drive away (sorrow, worries). *nukat-u sarrit ɛan qalb-i l-humuum* his jokes dispelled the worries from my heart. - vn *tasriyya*; ava *misarri*.
اتسرّى *ʔitsarra* or *ʔissarra* /vi/ passive of *sarra*. *raaḥ sinima wi-humuum-u tsarrit ɛannu* he went to the cinema and her troubles were dispelled. - iva *mitsarri*.

[3] (س ر ي)
سارية *sarya* /n pl *sawaari*/ flagpole.
سرية *sirya* <It *serie*> /n pl *-aat*/ *[elec]* series.
الريّا *ʔis-surayya* /prop n/ *[astron]* the Pleiads.

[4] س ر ي see س و ر [4] : *surya*

[5] س ر ي see س ا ر ي : *saari'*

[6] س ر ي see س ر ا ي : *saraaya*

س ر ي ا ل
سريالى *siryaali*↑ <Fr *surréal*> /adj/ surrealist.

س ر ي س
سريس *siriis* /coll n/ chicory.

س ر ي ن
سرينة *sariina* <It *sirena*> /n pl *sarayín*/ siren.

س ز ا ل
سيزال *sizaal* <Fr> /n/ sisal (hemp). - also *sayzal*.

س ز ب
سذاب *sazaab* /coll n/ rue, herb of grace (used in folk medicine). - also *sadaab*.
سذب *sazab* = *sazaab*. - also *sadab*.

س ز ج
سذاجة *sazaaga* /n/ innocence, naiveté.
ساذج *saazig, saazag* /adj * and pl *suzzaag*/ innocent, naive.

س ز ل see س ز ا ل : *sizaal*

س ز ن ا ك
سزناك *suznaak* <P *soznâk*> /n/ *[mus]* mode in Arabic music beginning on C and having E half flat and A flat.

س س ب ا ن
سيسبان *sasabaan, sisibaan, saysabaan*↑ <P *sîsabân*> /coll n/ sesban, Danchi plant.
سيسبانة *sasabaana, sisibaana* /unit n, pl *-aat*/ a sesban plant.

س س ت
سوستة *susta* <It *susta*> /n pl *susat*/ **1** spring. *susat il-ɛarabiyya* (car) suspension. ‖*susat kubbaaya* telescopic suspension (motorcycle). - *walad susta* nimble, agile boy. - *mitr' susta* self-winding tape-measure. **2** zip fastener.

س س ي س
سوسيس *susiis* <Fr *saucisse*> /coll n/ sausage(s).
سوسيسة *susiisa* /unit n/ a sausage.
سوسيسايّة *susisaaya* = *susiisa*.

س ش و ا ر
سسوار *sifwaar* <Fr *séchoir*> /n pl *-aat*/ (hair) dryer.

س ط ب see م ص ط ب : *maṣṭaba*

س ط ح
سطح *saṭaḥ (a)* /vt/ to flatten, spread out flat. *ḍarab-u w-saṭaḥ-u* he knocked him flat. - vn *saṭḥ*; ava *saaṭiḥ*; pva *masṭuuḥ*.
سطح *saṭḥ, suṭḥ* /n pl *suṭuuḥ, ʔasṭuḥ, ʔusṭuḥ*/ **1** surface. *saṭḥ il-mayya* (1) the surface of the water. (2) sea level. **2** deck (of a ship). **3** /pl *suṭuuḥ* used interchangeably with sing/ flat rooftop. *fooq is-suṭuuḥ* on the roof. *ʔil-ɣasiil manfuur ɛas-saṭḥ* the washing is hung on the roof. **4** /pl *ʔasṭuḥ* only/ *[geom]* plane.
سطحى *saṭḥi* /adj/ **1** pertaining to the surface. *riyaaḥ saṭḥiyya* surface winds. **2** superficial, shallow. *guruuḥ saṭḥiyya* superficial injuries. *lamḥa saṭḥiyya* a superficial glance.
سطحيّة *saṭḥiyya*↑ /n/ superficiality.
مسطوح *masṭuuḥ* /adj */ flat, shallow. *ṭabaq masṭuuḥ* dinner plate.
سطيح *siṭiiḥ, saṭiiḥ* /adv/ prostrate. *wiqiɛ ɛal-ʔarḍ' ṣiiḥ* he fell sprawling. ‖*raaqid siṭiiḥ* he's lying ill, he's lying helpless.
سطيحة *siṭiiḥa* = *siṭiiḥ*. *naayim siṭiiḥa* sleeping like a log.
مسطاح *misṭaaḥ, musṭaaḥ* /n/ land between the river's edge and the corniche.
اتسطح *ʔitsaṭaḥ* or *ʔissaṭaḥ* /vi/ to be flattened. - iva *mitsiṭiḥ*.
انسطح *ʔinsaṭaḥ* = *ʔitsaṭaḥ*. - iva *minsiṭiḥ*.
سطّح *saṭṭaḥ* /vt/ **1a** to flatten, level. *ʔawwil ḥaaga bi-nsaṭṭaḥ il-malɛab* first we level the pitch. **1b** to spread out flat, lay out flat. *saṭṭaḥ-li l-ɛayyil* lay the baby flat on his back for me. **2** to measure the surface

area of. *saṭṭaḥ if-ʃaqqa* he measured the floor area of the flat. — /vi/ **3** to ride on the roof of a train (to avoid paying the fare). **4** to lie down (for a rest). *ruuḥ saṭṭaḥ-lak ʃiwayya* go and lie down for a while. - vn *tasṭiiḥ*; ava/pva *misaṭṭaḥ*.

مسطّح *musaṭṭaḥ* /adj */ **1** flat. *qadam musaṭṭaḥa* flat foot. — /n pl *-aat*/ **2** flat surface. *musaṭṭaḥ bi-ɛagal ɛaʃaan yinaam ɛalee ɛaamil taḥt il-ɛarabiyya* a platform with wheels for a worker to lie on under the vehicle. **3** *[geom]* plane. **4** *[constr]* surface area.

اتسطّح *ʃitsaṭṭaḥ* or *ʃissaṭṭaḥ* /vi/ **1** to lie prone. *ḥ-atsaṭṭaḥ ʃiwayya* I'm going to stretch out for a while. **2** passive of *saṭṭaḥ* 1 and 2. - ava/iva *mitsaṭṭaḥ*.

س ط ر [1]

سطر *saṭr* /n pl *suṭuur, ʃasṭur*↑/ **1** row. *niruṣṣ-a-ha suṭuur suṭuur* we arrange them in rows. **2** line. ‖ *kurraas saṭr' w-saṭr* exercise book with widely spaced lines.

مسطرة *masṭara* /n pl *masaaṭir*/ **1** ruler. **2** *[text]* wooden track for a pick (on a loom). **3** facing for the neck opening of a garment. **4** metal strip which stabilizes the tuning of the strings of an *qanuun* (see Pl.J, 24).

أسطورة *ʃusṭuura, ʃasṭuura* /n pl *ʃasaṭiir*/ myth, fable, legend.

سطّر *saṭṭar* /vt/ **1** to compose and write down. *saṭṭar-lu gawaab* he wrote him a letter. ‖ *waɛd' wi-msaṭṭar ɛal-gibiin* man's fate is written on his face. **2** to rule, draw lines on. *bi-nsaṭṭar il-waraq* we rule lines on the paper. - vn *tasṭiir*; ava/pva *misaṭṭar*.

اتسطّر *ʃitsaṭṭar* or *ʃissaṭṭar* /vi/ passive of *saṭṭar*. - iva *mitsaṭṭar*.

س ط ر [2]

ساطور *saṭuur* /n pl *sawaṭiir*/ meat cleaver. - also *ʃaṭuur*.

س ط ر [3] see م س ط ر : *masṭareen, masṭariin*

س ط ط

سطّ *saṭṭ (u)* /vt and vi/ to hit, strike hard. *ʃiṭ-ṭuuba saṭṭit-ni f-qurt-i* stone hit me on my forehead. *ʃil-ɛarabiyya saṭṭit fil-ḥeeṭa* the car smashed into the wall. - vn *saṭṭ*; ava *saaṭiṭ*; pva *masṭuuṭ*.

سطّة *saṭṭa* /inst n, pl *-aat*/ a hit, a crash, a collision.

اتسطّ *ʃitsaṭṭ* or *ʃissaṭṭ* /vi/ passive of *saṭṭ*. - iva *mitsaṭṭ*.

انسطّ *ʃinsaṭṭ* = *ʃitsaṭṭ*. - iva *minsaṭṭ*.

س ط ع

سطع *saṭaɛ (a)* /vi/ to shine brightly. - vn *suṭuuɛ*; ava *saaṭiɛ*.

ساطع *saaṭiɛ* /adj/ bright, radiant.

س ط ل [1]

سطل *saṭal (i)* /vt/ **1** to intoxicate. **2** to drug, dope. - vn *saṭl, saṭalaan*; ava *saaṭil*; pva *masṭuul*.

سطلة *saṭla* /inst n, pl *-aat, suṭal*/ a trip, a 'high'.

مسطول *masṭuul* /adj * and pl *masaṭiil*/ intoxicated, drugged, doped.

سطل *suṭal* **1** /n/ any intoxicating agent. **2** /adj invar/ **2a** doped, stoned, high. **2b** intoxicated, drunk.

اتسطل *ʃitsaṭal* or *ʃissaṭal* /vi/ to be or become intoxicated. - ava/iva *mitsiṭil*.

انسطل *ʃinsaṭal* = *ʃitsaṭal*. - ava/iva *minsiṭil*.

سطّل *saṭṭal* **1** /vt/ to dope with *suṭal*. **2** /vi/ to take, or be under the effect of, *suṭal*. - vn *tasṭiil*; ava/pva *misaṭṭal*.

س ط ل [2]

سطل *saṭl* /n pl *ʃisṭaal, suṭúla, suṭuul*/ **1** bucket. **2** tin mug.

س ط و

سطا *saṭa (i)* /vi/ to break and enter, commit burglary. *ʃit-taʃmiin ḍidd is-saṭw* insurance against burglary. - vn *saṭw, saṭayaan*; ava *saaṭi*.

سطوة *saṭwa* /n/ influence, authority, power.

اتسطى *ʃitsaṭa* or *ʃissaṭa* /vi/ (impersonal) passive of *saṭa*. *ʃil-xazna tsaṭa ɛaleeha* the safe was burgled. - iva *mitsiṭi*.

س ع see و س ع : *siɛa*↑

س ع ت ر

سعتر *saɛtar* /n/ thyme. - also *zaɛtar*.

س ع د [1]

سعد *siɛid (a)* /vi/ **1** to become happy. *siɛidt' b-muqablit-ak* it has been a pleasure to meet you. **2** to be fortunate in material gain. *min gaawir is-saɛiid yisɛad [prov]* or *ḥuṭṭ' rigl-ak maṭraḥ rigl is-saɛiid tisɛad [prov]* stick close to a rich man and you too will have luck. - vn *saɛd*.

سعد *saɛad (i)* /vt/ **1** to make happy. *ʃig-gawaaza saɛadit-ni qawi* the marriage made me very happy. ‖ *yisɛid ṣabaaḥ-ak* ≈ good morning to you (in response to *ṣabaaḥ il-xeer* etc.). **2** to make fortunate. *ʃin saɛad-ni zamaan-i ḥa-tirsi ɛalayya l-munaqṣa* if things go well I should get the tender. - vn *saɛd*; ava *saaɛid*; pva *masɛuud*.

سعد *saɛd'* /n/ **1** happiness. **2** good fortune. *kaan qadam saɛd[a] ɛaleehum* he brought them good luck. *min saɛd-i-na nnak geet* luckily for us, you've come!

السعديّة *ʃis-saɛdiyya* /prop n/ Sufi order.

ساعد *saaʕid*[1↑] /n pl *sawaaʕid*/ forearm.
أسعد *ʔasʕad*[1] /el/ more/most happy, fortunate etc.
سعادة *saʕaada* /n/ **1** happiness. **2** /in construct with pron suff or title/ respectful title, or form of address, or reference. *saʕadt-ak ʕaayiz ʔeeh* ≈ what do you want, sir? *saʕaadit il-beeh* ≈ his Excellency the Bey (also used jokingly and cynically).
سعود *suʕuud* /pl n/ good fortune, prosperity. *saʕd is-suʕuud* ≈ utmost happiness.
سعيد *saʕiid* /adj pl *suʕada*/ **1** happy. *hiyya ħa-tkuun saʕiida maʕaa* she will be happy with him. **2** fortunate, lucky (especially in material gain). *ʔis-saʕiid kull in-naas tixdim-u [prov]* everyone wants to do a rich man a service.
سعيدة *saʕiida* /interj/ a salutation given either on joining or leaving someone's company ≈ hello, good-bye.
اتسعد *ʔitsaʕad* or *ʔissaʕad* /vi/ to be blessed with good fortune. - iva *mitsiʕid*.
انسعد *ʔinsaʕad* = *ʔitsaʕad*. - iva *minsiʕid*.
ساعد *saaʕid*[2] **1** /vt/ to help, assist. *miraat-i nizlit tisaʕd-u f-fira l-ħaaga* my wife went to help him buy things. *saʕidnaa ʕala saħb il-ɣariiq* we helped him pull the drowning man out. ‖ *ʔustaaz musaaʕid [acad]* associate professor. - *mawadd[i] musaʕda [chem]* catalysts. **2** /vi/ to give help, give assistance. - vn *musaʕda*; ava *musaaʕid*.
مساعدة *musaʕda* /n pl *-aat*/ help, assistance. *ʔayy[i] musaʕda* do you need any help?
مساعد *musaaʕid* /n */ **1** assistant, aide. **2** *[auto]* shock absorber.
اتساعد *ʔitsaaʕid* or *ʔissaaʕid* /vi/ to be helped, be assisted. - iva *mitsaaʕid*.
أسعد *ʔasʕad*[2↑] = *saʕad*. - vn *ʔisʕaad*; ava *musʕid*.
مسعد *musʕad*↓, *misʕid*↓ /adj */ born lucky.

س ع د [2]
سعد *saʕd*[2], *siʕd*, *suʕd* /coll n/ plant(s) of the sedge family, particularly Cyperus longus, Cyperus rotundus.
سعدة *siʕda* /pl *-aat*/ unit noun of *saʕd*[2].
سعداية *siʕdaaya* = *siʕda*.

س ع د [3] see س ع و د: *suʕuudi, saʕuudi, siʕuudi, ʔis-suʕudiyya, ʔis-saʕudiyya, ʔis-siʕudiyya, saʕwid, ʔitsaʕwid*

س ع ر [1]
سعر *siʕr* /n pl *ʔasʕaar*/ price. *ʔasʕaar il-fakha wil-xuḍaar* the prices of fruit and vegetables. *miʃ ħa-ybiiʕ bis-siʕr il-maʕquul* he won't sell at a reasonable price. ‖ *siʕr il-fayda* rate of interest.
سعّر *saʕʕar* /vt/ **1** to price, set a price for. *saʕʕar-li l-kimmiyya di min faḍl-ak* give me a price for this quantity, please. **2** to attach worth or value to. *ma-ysaʕʕar-ak-ʃ* he has no respect for you. - vn *tasʕiir*; ava/pva *misaʕʕar*.
تسعيرة *tasʕiira* /n/ officially fixed price (of a given commodity). *bi-ybiiʕ-u bit-tasʕiira* he sells it at its fixed price.
مسعّر *misaʕʕar, musaʕʕar* /adj/ officially priced.
اتسعّر *ʔitsaʕʕar* or *ʔissaʕʕar* /vi/ passive of *saʕʕar*. - iva *mitsaʕʕar*.

س ع ر [2]
سعر *siʕir, suʕur (a)* /vi/ to become rabid (of an animal). - vn *saʕar*; ava *saʕraan*.
سعر *saʕar*[1] *(i)* /vt/ to infect (an animal) with rabies. ‖ *masʕuur fil-ʔakl* eating ravenously. - vn *saʕaraan*; ava *saaʕir*; pva *masʕuur*.
سعر *saʕar*[2] /n/ rabies.
سعران *saʕraan* /adj/ rabid (of animals). see further under س ع ر ن
اتسعر *ʔitsaʕar* or *ʔissaʕar* /vi/ **1** to become rabid. **2** to get in a frenzy. - ava *mitsiʕir*.

س ع ر [3]
سعر *suʕr* /n pl *aat*/ calorie.

س ع ر ن see also س ع ر [2]
سعرن *saʕran* **1** /vt/ to infect (an animal) with rabies. **2** /vi/ to become rabid (of an animal). - vn *saʕrana*; ava/pva *misaʕran*.
اتسعرن *ʔitsaʕran* or *ʔissaʕran* /vi/ to become rabid (of an animal). - ava *mitsaʕran*.

س ع ف [1]
سعف *sa̱ʕaf*[1] *(i)* /vt/ **1** to render an urgently needed service to, rush to assist. *ʔil-muhimm[i] dilwaqti tisʕifuu-ni b-ṣuurit il-muzakkira* the important thing now is for you to rush me the copy of the memo. *ʔisʕifii-ni b-luqma - ʔana mistaʕgil* give me a quick bite - I'm in a hurry. **2** /in neg contexts/ to be sufficient for. *ʔil-waqt[i] btaaʕ il-birnaamig miʃ ħa-yisʕif-na l-kull-i-da* programme time won't allow us to do all that. - vn *saʕafaan*; ava *saaʕif*; pva *masʕuuf*.
أسعف *ʔasʕaf*[↑] = *saʕaf*. - vn *ʔisʕaaf*; ava *misʕif*.
إسعاف *ʔisʕaaf* /n/ **1** /pl *-aat*/ urgently-needed assistance. *lamma ʔakuun ʕaayiz ʔalħaq ʕaṭr[i] yibʕa t-taks[i] ʔisʕaaf liyya* when I want to be in time for a train a taxi is what I really need. ‖ *(ʕarabiyyit)* *ʔisʕaaf* ambulance. - *ʔisʕafaat (ʔawwaliyya)* first aid. **2** *ʔil-ʔisʕaaf* /no pl/

2a the First Aid Organization, the Red Crescent. **2b** specifically, the First Aid Centre on Ramses Street.

² س ع ف
سعف *saɛaf²* /coll n/ palm frond(s). *ɦadd ɪs-saɛaf [Chr]* Palm Sunday. - also *zaɦaf, zaɛaf.*

س ع ل
سعل *saɛal (i)* /vi/ to cough. - vn *suɛaal*; ava *saaɛil.*
سعال *suɛaal* /n/ cough. *suɛaal diiki* whooping cough.
سعلة *saɛla* /inst n, pl *-aat*/ a cough.
سعلة *siɛla↓* /n/ a cough.

س ع و د
سعودى *suɛuudi, saɛuudi, sɪɛuudi* **1** /adj */ Saudi. **2** /n */ a Saudi.
السعوديّة *ʃis-suɛudiyya, ʃɪs-saɛudiyya, ʃis-siɛudiyya* /prop n/ Saudi Arabia.
سعود *saɛwid* /vt/ to Saudi-ize. - vn *saɛwada*; ava/pva *misaɛwɪd.*
اتسعود *ʃitsaɛwid* or *ʃissaɛwid* /vi/ to be or become Saudi-ized. - ava/iva *mitsaɛwid.*

¹ س ع ى
سعى *saɛa (a)* /vi/ **1** to make an effort. *ɦ-asɛaa-lak fi-ʃuɤla* I'll endeavour to find you a job. *ʃisɛa ya ɛabd' w-ʃana ʃasɛa maɛaak [prov]* ≈ God helps those who help themselves. ‖*ʃakar allaahu saɛy-a-kum* may God repay your effort (in reply to funeral condolences). **2** *[Isl]* to perform the *saɛy*. - vn *saɛy*; ava *saaɛi.*
¶ *ʃisɛa* /fem *ʃɪsɛi*, pl *ʃɪsɛu*/ please speed up, please walk a little faster! (to someone holding up one's progress in a crowd).
السعى *ʃis-saɛy* /n/ *[Isl]* the ceremony of running between Safa and Marwa seven times (as part of the pilgrimage ritual).
ساعى *saaɛi* /n pl *suɛaah*/ office boy, office messenger. ‖*saaɛi busṭa* (or *bariid*) postman.
مسعى *masɛa* /n pl *masaaɛɪ*/ effort. *masaaɛi ɦamiida* commendable efforts. *ʃallaah yinaggaɦ masɛaa-k* God grant you success in your undertaking.

² س ع ى see س ى ع: *saaɛa²*, *ʃitsaaɛa*

س غ ر
بغر *saɤrˆ* /n pl *suɤuur*/ seaport.
بغرة *saɤra* /n pl *-aat*/ gap, breach, loophole.

¹ س ف ح
سفح *safaɦ (a)* /vt/ **1** to shed, spill (blood). *w-allaahi l-asfaɦ damm-ak* ≈ by God, I'm going to kill you! **2** to snatch, swipe, grab. *safaɦit il-ɕirfeen illi ɦilt-i* she swiped everything I had. *safaɦ il-ʃakl* he wolfed down the food. **3** = *safax*. - vn *safɦ*; ava *saafiɦ*; pva *masfuuɦ.*
سفّاح *saffaaɦ* /n */ **1** killer, murderer. **2** person without scruples, swindler. - also *saffaak.*
اتسفح *ʃitsafaɦ* or *ʃɪssafaɦ* /vi/ passive of *safaɦ*. - iva *mitsifiɦ.*

² س ف ح
سفح *safɦ* /n pl *sufuuɦ*/ foot (of a hill or mountain).

س ف خ
سفخ *safax (a)* /vt/ to strike, deal a blow to. *safax-ha ɛalqa nḍiifa* he gave her a sound thrashing. *safax-u ɕalam suxn* he slapped him hard in the face. - also *safaɦ, safaɛ*. - vn *safx*; ava *saafix*; pva *masfuux.*
اتسفخ *ʃitsafax* or *ʃɪssafax* /vi/ passive of *safax*. - iva *mɪtsifix.*

س ف خ س
سفوخس *sufuxs* /interj/ pooh! *sufuxs" ɛaleek* pooh to you!

¹ س ف ر
سفر *safar* /n/ travel(ling). *ʃis-safar bɪl-ɕaṭr' ɦilw* it's pleasant to travel by train. *ʃis-safar min hina lil-ʃuɕṣur yaaxud ɕadd' ʃeeh* how long does the journey take from here to Luxor? *safar-u ṭaal sana* he was away travelling for a year. ‖*miina s-safar* port of embarkation.
سفريّة *safariyya* /n pl *-aat*/ trip, journey. *kaanɪt safarɪyya ɦɪlwa* it was a lovely trip. *maktab safarɪyyaat* travel office.
سفارة *sifaara* /n pl *-aat*/ embassy.
سفير *safiir* /n pl *sufara*/ ambassador.
سفّر *saffar* /vt/ **1** to send off on a journey, dispatch. *ɦ-asaffar-ak barra tiftiri ɦagaat* I shall send you abroad to buy things. **2** *[naut]* to clear (a ship). - vn *tasfiir*; ava/pva *misaffar.*
اتسفّر *ʃitsaffar* or *ʃissaffar* /vi/ passive of *saffar*. - iva *mitsaffar.*
سافر *saafir* /vi/ to travel, go on a journey. *waaɦid minhum bi-ysaafir lil-xaarɪg* one of them travels abroad. *safirt' maṣr* I went to Egypt. *fuʃaad saafir il-ɕizba n-nahar-da* Fuad went to the farm today. - vn *misafra*; ava *misaafir.*
مسافر *misaafir, musaafir* /n */ traveller. ‖*ʃooḍit misafriin* front parlour, sitting room. - *musaaɛid musaafɪr [Joc]* railway porter.

س ف ر [2]

سفرة *sufra*[1] /n pl *sufar*/ dining table, dining suite. ‖ *ʕoodit sufra* dining room. - *sufra dayma* ≈ may your table always be laden (expression of thanks for a meal).

سفرجي *sufragi* /n pl *-yya*/ waiter, a servant who waits at table.

س ف ر ( ) [3]

سفرة *sufra*[2] /n pl *sufar*/ **1** piston driving a balance hammer (in a watch). **2** yoke (of a garment). **3** *[coarse slang]* anus, arsehole.

سفر *sifr*[1↑] /n pl *ʕasfaar*/ book (of the Bible).

سفيرة *sufeera* or *sifeera: ʕis-sufeera ɣaziiza* **1** name of a beautiful well-born lady of legend; now used ironically, as in *fakra nafs-a-ha miin - ʕis-sufeera ɣaziiza* ≈ who does she think she is, the Queen of Sheba? **2** a kind of diorama showing scenes from traditional stories for children.

س ف ر [4] see ص ف ر [3] : *sifr*[2]

س ف ر ج ل

سفرجل *safargal* /coll n/ quince(s).

سفرجلة *safargala* /unit n, pl *-aat*/ a quince.

س ف ر و ت

سفروت *safruut* /n pl *safariit*/ little rascal.

س ف س ف

سفسف *safsif* /vi/ to talk nonsense. - vn *safsafa*; ava *misafsif*.

سفسفة *safsafa* /n pl *safaasif*/ silly talk, nonsense.

س ف ط

سفط *safaṭ (u)* /vt/ **1** to emaciate, make lean or gaunt. *ʕil-humuum safaṭit wiff-u* worries have made his face gaunt. **2** to dry up, shrivel. *ʕif-fams*[i] *safaṭit il-lamuun* the sun has dried up the lemons. **3** to suck in, contract, flatten. *safaṭit baṭn-a-ha ɣafaan tiwarri ʕinnaha muf ḥaamil* she drew in her stomach to show she was not pregnant. — /vi/ **4** to become drawn or gaunt (of face, cheeks etc.). **5** to dry up, shrivel, diminish in size. ‖ *baṭn-i safaṭit mig-guuɛ* I feel famished. - vn *safṭ, safaṭaan*; ava *saafiṭ*; pva *masfuuṭ*.

مسفوط *masfuuṭ* /adj */ drawn, gaunt, haggard.

سفطان *safṭaan* /adj/ **1** drawn, gaunt, haggard. **2** shrivelled, dried up.

اتسفط *ʕitsafaṭ* or *ʕissafaṭ* /vi/ **1** to become drawn or gaunt. **2** to shrivel, diminish in size. - ava *mitsifiṭ*.

انسفط *ʕinsafaṭ* = *ʕitsafaṭ*. - ava *minsifiṭ*.

سفّط *saffaṭ* = *safaṭ*. - vn *tasfiiṭ*; ava/pva *misaffaṭ*.

اتسفّط *ʕitsaffaṭ* or *ʕissaffaṭ* = *ʕitsafaṭ*. - iva *mitsaffaṭ*.

س ف ع

سفع *safaɛ (a)* /vt/ to strike, hit. *safaɛt-u ɢalam* I slapped him in the face. - also *safaḫ*[3], *safax*. - vn *safɛ*; ava *saafiɛ*; pva *masfuuɛ*.

اتسفع *ʕitsafaɛ* or *ʕissafaɛ* /vi/ to be struck, be hit. - iva *mitsifiɛ*.

س ف ف

سفّ *saff (i)* /vt/ **1** to eat rapidly, gobble. *saff il-ʏadwa w-mifi* he wolfed down his lunch and left. ‖ *ɢandi gazma b-tirtir bi-tsiff*[i] *traab* I have a pair of shoes with sequins that pick up the dust like anything. - *saffeet turaab fig-geef* I had a tough time in the army. - *ʕil-ḫuṣaan saff il-ligaam* the horse bolted. **2** to consume in extravagant quantities. *ʕil-ɢarabiyya bi-tsiff*[i] *banziin* the car just laps up petrol. *ʕil-ɢamaliyya bi-tsiff*[i] *fluus kitiir* the process is enormously expensive. **3** to purloin (money). *saff*[u] *ḫaqq ig-gamɛiyya w-saafir* he stole the savings-club kitty and went abroad. - vn *saff, safafaan*; ava *saafif*; pva *masfuuf*.

سفوف *sufuuf* /n/ medicinal powder taken orally.

سفيّف *sufayyif* /adj */ **1** tiny, minute. **2** shrimpy, scrawny.

سفّاف *saffaaf* /n */ grafter.

اتسفّ *ʕitsaff* or *ʕissaff* /vi/ passive of *saff*. - iva *mitsaff*.

انسفّ *ʕinsaff* = *ʕitsaff*. - iva *minsaff*.

سفّف *saffif* /vt/ **1** to cause to consume in extravagant quantities. *saffifuu-na ʕakl*[i] *l-ʏaayit ma ṭafaḫna* they stuffed us with food until we were ready to burst. ‖ *saffif-ni ṭ-ṭuraab* he gave me a hell of a time. **2a** to make (s.o.) eat or swallow. ‖ *saffift-u kaam laḫluuḫ* I slipped him a few pounds as a bribe. **2b** to administer a dosage of *sufuuf* to. - vn *tasfiif*; ava/pva *misaffif*.

اتسفّف *ʕitsaffif* or *ʕissaffif* /vi/ passive of *saffif*. - iva *mitsaffif*.

س ف ق

سفق *safaq (a)* /vt/ to slam shut. *balaaf tisfaq il-baab kida* don't slam the door like that! ‖ *xad fuluus-i w-ɢaal ʕinna safaqnaa-kum* ≈ he swiped my money and that was the last I saw of it. - vn *safq*; ava *saafiq*; pva *masfuuq*.

اتسفق *ʕitsafaq* or *ʕissafaq* /vi/ to be slammed shut. - iva *mitsifiq*.

انسفق *ʕinsafaq* = *ʕitsafaq*. - iva *minsifiq*.

سفّق *saffaq* /vi/ to blow strongly (of wind). - vn *tasfiiq*; ava *misaffaq*.

س ف ك

سفك *safak (i, u)* /vt/ to shed, spill (blood). - also *safaḫ*. - vn *safk*; ava *saafik*; pva *masfuuk*.

سفّاك *saffaak* **1** /adj */ bloodthirsty. *ʔaatil saffaak* a bloodthirsty killer. **2** /n */ killer, murderer. - also *saffaaḫ*.

اتسفك *ʔitsafak* or *ʔissafak* /vi/ passive of *safak*. *yaama tsafakit dima b-sabab it-taar* how much blood has been shed in vendettas! - iva *mitsifik*.

انسفك *ʔinsafak* = *ʔitsafak*. - iva *minsifik*.

س ف ل

سفل *sifl* /n pl *ʔasfaal*/ **1** bottom edge. *sifl il-baab* the bottom edge of the door. **2** curb(stone). **3** skirting-board.

سفلى *sufli* /adj */ lower, subjacent. *ʔid-door is-sufli* the lower floor. *ʔil-ʕaalam is-sufli [magic]* the nether world. world of demons and evil spirits.

أسفل *ʔasfal↑* /el/ lower/lowest. *li-ʔasfal* downward. *nazziluu fi-ʔasfal saafiliin* he was demoted to the lowest rank.

سفالة *safaala* /n/ baseness, loathsomeness, meanness.

سافل *saafil* **1** /adj * and pl *safala*/ loathsome, base, vile. **2** /n pl *safala, sufala, ʔasaafil*/ scoundrel, cad, heel.

سفّل *saffil* /vi/ to behave in a despicable, caddish manner. *ʔinta ḫa-tsaffil maʕaaya* are you going to play dirty with me? - ava *misaffil*.

اتسافل *ʔitsaafil* or *ʔissaafil* /vi/ to speak rudely. *bi-yitsaafil ʕala zumalaat-u* he abuses his colleagues. - ava *mitsaafil*.

س ف ل ت see also ء س ف ل ت

سفلت *saflit* /vt/ to cover with asphalt. - vn *saflata*; ava/pva *misaflit*.

اتسفلت *ʔitsaflit* or *ʔissaflit* /vi/ to be covered with asphalt. - vn *tisafliit*; iva *mitsaflit*.

س ف ل ق

سفلق *saflaq* /vt/ to do (s.th.) carelessly or in a slipshod manner. - vn *saflaqa*; ava/pva *misaflaq*.

سفلقة *saflaqa* /n/ **1** sloppiness, carelessness. **2** sponging, living off others. *bi-yaakul saflaqa* he sponges his meals off others.

سفلاق *siflaaq* /n pl *siflaaqa*/ sponger, freeloader.

اتسفلق *ʔitsaflaq* or *ʔissaflaq* /vi/ passive of *saflaq*. - iva *mitsaflaq*.

س ف ن

سفينة *safiina* /n pl *sufun, safaayin*/ ship, boat. *safiinit nuuḫ* Noah's ark. *safiinit ʔinzaal* landing craft. *safiinit faḍaaʔ* space-ship.

س ف ن ج

سفنج *safing, sifing* /coll n/ sponge(s). *ʃalta sfing* sponge-rubber cushion.

سفنجة *safinga, sifinga* **1** /unit n, pl *-aat*/ a sponge. **2** /n/ liquor sponged from a counter and resold, 'liquor squeezings'.

سفنجاية *sifingaaya, safingaaya* = *safinga*.

س ف ن د ر

سفندر *safandar* /coll n/ *[bot]* horse-tongue tree (Ruscus hippo-glossum L.). - also *lisaan il-faras*.

س ف ن د ى

سفندى *safandi* <prop n *Yusuf Efendi*> /coll n/ tangerine(s). - also *yusafandi, yuusif ʔafandi, yusfi, ʔistafandi, yustafandi*.

سفنديّاية *safandiyyaaya* /unit n, pl *safandiyyaat*/ a tangerine.

س ف ه

سفه *safah* /n/ **1** insolence. **2** *[Isl law]* legal incompetence.

أسفه *ʔasfah* /el/ more/most insolent.

سفاهة *safaaha* /n pl *-aat*/ insolence.

سفيه *safiih* /adj pl *sufaha*/ **1** insolent. **2** *[Isl law]* incompetent.

سفّه *saffah, saffih* /vt/ to denigrate, deprecate. *leeh dayman bi-tsaffih kalam-ha* why do you keep putting her down? - vn *tasfiih*; ava/pva *misaffah*.

اتسفّه *ʔitsaffah* or *ʔissaffah* /vi/ passive of *saffah*. - iva *mitsaffah*.

س ف و ن

سيفون *sifoon* <Fr *siphon*> /n pl *-aat*/ **1** cistern, lavatory tank. *fadd is-sifoon* he flushed the lavatory. **2** trap of a pipe or a drain. **3** soda siphon.

س ف ى

سفى *safa[1] (i)* **1** /vt/ to raise, swirl up (dust, sand). **2** /vi/ to rise (of dust or sand). - vn *safy*; ava *saafi*; pva *masfi*.

سفى *safy* /n/ fine dust. *safy rmaal* sand drift.

سفا *safa[2]* /coll n/ **1** thorns. **2** thin thorn-like fishbones.

سفاية *safaaya* /unit n, pl *-aat*/ **1** a thorn. **2** a thorn-like fishbone.

س ف ى ت

سوفييتى *suvyitti, suvyiiti* /adj pl *suvyitt*/ Soviet. *ʔil-ʔittiḥaad is-suvyitti* the Soviet Union.

س ق see و س ق : *siqa*

س ق ا ل

سقالة *siqaala*[1] <Gr *skala*> /n pl *-aat, saqaayil/ [naut]* **1** gangplank. **2** port-side. *siqaala labanda* hard a-port!

سقالة *siqaala*[2] or *saqqaala* <Gr *skala*> /n pl *siqalaat, saqqalaat, saqaayil/* **1** scaffold, scaffolding. **2** pier, jetty.

س ق ب see ت ق ب : *suqbˀ*

س ق ر[1]

سقر *saqar, saqar* /fem n/ *[Isl]* hell.

س ق ر[2] see س ق ق ا ر : *saqqaara*

س ق س ق

سقسق *saqsaq* **1** /vt/ to moisten (by sprinkling). *saqsaq il-ɛeef bi-ʃwayyit mayya yibqa ṭari* sprinkle some water on the bread and it will become soft. **2** /vi/ to chirp. -also *zaqzaq*. -vn *saqsaqa*; ava/pva *misaqsaq*.

اتسقسق *ʔitsaqsaq* or *ʔissaqsaq* /vi/ to be moistened. -iva *mitsaqsaq*.

س ق ط

سقط *saqaṭ*[1], *suquṭ, siqiṭ (a, u)* /vi/ **1** to fall, drop. *ʔil-mandiil saqaṭ min ʔiid-i* the handkerchief fell from my hand. ‖ *ɢalb-i siqiṭ* I felt faint. - *suquṭ min nazar-i* (or *min ɛeen-i*) I've lost all respect for him. **2a** to have a miscarriage, abort. *siqṭit baɛd il-ḥadsa* she miscarried after the accident. **2b** *[path]* to prolapse: *suquuṭ beet il-wild* prolapse of the uterus. **3** to fail (in an examination). *siqiṭ*[i] *fil-ɛarabi* I failed in Arabic. **4a** to drop out, disappear. *ʔism-u saqaṭ mil-kaff* his name dropped from the list. **4b** to lapse, cease (of a right). **5** *[mech]* to be seated (in or on s.th.). *ʔik-kabbaas bi-yisqaṭ fil-masuura* the piston is seated in the pipe. **6** *[naut]* to drift (with the wind, tide etc.). -vn *suquuṭ, saqaṭaan*; ava *saaqiṭ*.

¶ *yasquṭ* ... down with ...!

سقط *saqaṭ*[2] *(i)* /vt/ **1** to drop. *saaɛit ma l-mayya tiɣli ʔisqiṭi l-xuḍaar* as soon as the water boils drop in the vegetables. **2** to plot, trace (on a map or chart). -vn *saqṭ, saqaṭaan*; ava *saaqiṭ*; pva *masquuṭ*.

سقوط *suquuṭ* /n/ *[naut]* sag.

ساقط *saaqiṭ* /n */ unprincipled person.

سقط *saqṭ* /n/ **1** abortion, miscarriage. **2** miscarried foetus.

سقطة *saqṭa*[1] /inst n, pl *-aat*/ a drop, a fall.

ساقطة *saqṭa*[2] /fem ava/ ‖ *kull*[i] *saqṭa w-laha laqṭa [prov]* ≈ every Jack has his Jill. - *ɢaaɛid ɛas-saqṭa wil-laqṭa [prov]* ≈ on the alert for every opportunity (especially the opportunity to act against one's enemies).

سقطان *saqṭaan: ɢalb-(i) saqṭaan (min ig-guuɛ)* (I am) fainting from hunger.

سقط *saqaṭ*[3] /n/ **1** offal. ‖ *ɛidim il-gild*[i] *wis-saqaṭ* he lost everything. **2** /coll/ windfall(s) (especially of oranges and lemons).

سقاط *suqaaṭ* /n/ **1** offal. **2** that which falls from something. *suqaaṭ il-ɣurbaal* siftings, what falls from the sieve.

سقاطة *suqaaṭa = suqaaṭ*.

سقّاط *saqqaaṭ* /n * and pl *saqqaaṭa*/ seller of offal.

سقّاطة *suqqaaṭa* or *saqqaaṭa* /n pl *-aat*/ **1** door latch. **2** (short for *suqqaaṭit il-ʃamaan*) safety-catch (of a gun). **3** *[mech]* pawl, ratchet (e.g., of a water-wheel). **4** *[naut]* **4a** centre-board. **4b** anchor, any weight serving as an anchor (in Nile boats).

اتسقط *ʔitsaqaṭ* or *ʔissaqaṭ* /vi/ **1** passive of *saqaṭ*[2]. **2** to drop down, jump down. -iva *mitsiqiṭ*.

انسقط *ʔinsaqaṭ = ʔitsaqaṭ*. -iva *minsiqiṭ*.

سقّط *saqqaṭ* /vt/ **1** to cause to fall, let fall. *saqqaṭ il-mandiil* I dropped the handkerchief. *saqqaṭit il-filuus fil-ḥaṣṣaala* she dropped the money in the savings box. **2** to lower. *ḥuṭṭ il-filuus fis-sabat wi-saqqaṭ-huu-li* put the money in the basket and lower it to me. **3** to dip, drop. *nisaqqaṭ-ha fis-sukkar* we dip it in the sugar. **4** to (cause to) fail in an examination). *ʔil-mudarris da huwwa lli saqqaṭ-ni* it was that teacher who failed me. **5** to seat (one thing in or on another). *bi-nsaqqaṭ-ha fil-magaari* we seat them in the grooves. **6** to plot (on a map or chart). **7** to abort, perform an abortion for. *saqqaṭit nafs-a-ha* (1) she aborted herself. (2) she got an abortion. — /vi/ **8** to have a miscarriage. -vn *tasqiiṭ*; ava/pva *misaqqaṭ*.

اتسقّط *ʔitsaqqaṭ* or *ʔissaqqaṭ* /vi/ passive of *saqqaṭ*. ‖ *ɢaaɛid yitsaqqaṭ-li kull*[i] *ɣalṭa* he keeps picking on me. -iva *mitsaqqaṭ*.

س ق ع[1]

سقع *suquɛ, siqiɛ (a)* /vi/ **1** to become chilled (of drinks etc.). **2** to feel chilly or shivery. -vn *suquɛiyya*; ava *saaqiɛ*.

سقوعيّة *suquɛiyya* /n/ coldness. *ʔana ḥasseet bi-suquɛiyyit il-filuus* I felt the cold touch of the money.

ساقع *saaqiɛ* /adj/ cold, chilly. *tifrab ḥaaga saqɛa* would you care for a cold drink? ‖ *damm-u saaqiɛ* he is insensitive and unpleasant, he is a creep.

سقعة *saqɛa* /n/ chill, coldness. *ɣasalt-u-hum bi-mayya fatra yaɛni ṭayra saqɛit-ha* I washed them in tepid

water, that's to say, (water) with the chill taken off.
سقعان *saqʕaan* /adj */ (feeling) chilly, shivery.
أسقع *ʔasqaʕ* /el/ more/most cold, chilly etc.
سقّع *saqqaʕ* /vt/ to cool, chill. *saqqaʕ lina l-biira* chill the beer for us. - vn *tasqiiʕ*; ava *misaqqaʕ*.
اتسقّع *ʔitsaqqaʕ* or *ʔissaqqaʕ* /vi/ to be cooled. - iva *mitsaqqaʕ*.
اتسقع *ʔistasqaʕ* /vt/ **1** to consider cold or chilly. *ʔana mistasqaʕ ig-gaww - xallii-na naaxud jakittaat* I find the air quite chilly; let's take jackets along. ‖ *bi-nistasqaʕ damm-u* we find him a boor. **2** to select for coldness. *ʔistasqaʕ lina qzazteen* pick us a couple of cold bottles. - ava/pva *mistasqaʕ*.

س ق ع [2]
سقع *suqʕ* /adj invar/ choice, first-rate, top-notch. *zubuun suqʕ* a prize customer. *ʔiddaa-lu kilmiteen suqʕ* ≈ he gave him a good talking to. *ʔiggawwizit gawwaaza suqʕ* she married extremely well. *ʔarḍ' suqʕ* a choice piece of land.

س ق ع [3] see م س ق ق ع : *misaqqaʕa*

س ق ف [1]
سقف *saqaf (u)* /vt/ to roof, put a roof over. - vn *saqafaan*; ava *saaqif*; pva *masquuf*.
سقف *saqf* /n pl *suquuf, suqúfa, ʔasquf*/ ceiling.
سقفيّة *saqfiyya* /n pl *-aat*/ = *saqf*.
سقيفة *saqiifa, siqiifa* /n pl *saqaayif*/ arbour.
اتسقف *ʔitsaqaf* or *ʔissaqaf* /vi/ to be roofed. - iva *mitsiqif*.
انسقف *ʔinsaqaf* = *ʔitsaqaf*. - iva *minsiqif*.
سقّف *saqqaf*[1] /vt/ to roof, provide with a roof. - vn *tasqiif*; ava/pva *misaqqaf*.
اتسقّف *ʔitsaqqaf*[1] or *ʔissaqqaf*[1] /vi/ to be roofed. - iva *mitsaqqaf*.

س ق ف [2]
سقفة *saqfa* /n pl *-aat*/ a clap.
سقّف *saqqaf*[2] /vi/ **1** to clap, applaud. ‖ *ʔiid waḥda ma-tsaqqaf-ʃ [prov]* (a single hand can't clap) ≈ it takes two to tango. **2** *[mech]* to pink, ping, rattle (of a car engine). *fii tasqiif fil-ʕarabiyya* there's a knocking in the car. - vn *tasqiif*; ava *misaqqaf*.
سقّفت *saqqafit* /n/ style of serving in the game of *xara* (q.v.).
تسقيفة *tasqiifa* /inst n, pl *-aat*/ **1** a clap. **2** a round of applause.
اتسقّف *ʔitsaqqaf*[2] or *ʔissaqqaf*[2] /vi/ (impersonal) passive of *saqqaf*[2]. *ʔitsaqqaf-lu* he was applauded. - iva *mitsaqqaf*.

س ق ف [3]
ثقافة *saqaafaʔ* /n/ culture. *wizaarit is-saqaafa* Ministry of Culture. ‖ *ʔis-saqaafa [obsol]* pre-high school leaving certificate. - *ʔis-saqaafa l-gamahiriyya* youth culture centres.
ثقافي *saqaafiʔ* /adj/ cultural.
ثقّف *saqqaf* /vt/ to impart culture to, make cultured. *ʔil-ʔaflaam il-kuwayyisa bi-tsaqqaf in-naas* good films educate people. - vn *tasqiif*; pva *musaqqaf*.
تثقيفي *tasqiifi* /adj/ designed to impart culture. *ʔaflaam tasqifiyya* educational films.
مثقّف *musaqqafʔ* **1** /adj */ cultured, sophisticated. **2** /n/ intellectual. *ʔazmit il-musaqqafiin* the estrangement of the intellectuals.
اتسقّف *ʔitsaqqaf* or *ʔissaqqaf* /vi/ passive of *saqqaf*. - iva *mitsaqqaf*.

س ق ف [4] see ء س ق ف : *ʔusquf*

س ق ق ا ر
سقّارة *saqqaara* /prop n/ (the village and pyramid site of) Sakkara.

س ق ل [1] see ت ق ل : *ʔasqaal*

س ق ل [2] see س ق ا ل : *siqaala[1], siqaala[2], saqqaala*

س ق م
سقم *suqmʔ* /n pl *ʔasqaam*/ malady, ill. *ʔasqaam igtimaʕiyya* social evils.

س ق ى
سقى *saqa (i)* /vt/ **1** to give to drink. *ʔisqii-ni kubbaayit mayya* give me a glass of water to drink. *saqeet il-ʕigl* I watered the calf. ‖ *ʔasqii l-murr* I'll give him a hard time. - *saqeet-u ṣanʕit-i* I taught him (everything I know in) my trade. **2** to water (plants). *nisqi f-fital baʕdᵃ ʕafart iyyaam* we water the seedlings after ten days. **3** to irrigate. *fi-baʕḍ in-nawaaḥi laazim yisqu l-ʔarḍᵃ ʕala madaar is-sana* in some areas they must irrigate the land all year round. ‖ *nisqi l-kunaafa s-sukkar maʕquud* we pour the syrup over the *kunaafa*. **4** to silver (mirrors). **5** *[metal]* to plate (metal) by electrolysis. **6** to temper (metal). - vn *saqy, siqaaya, siqiyya*; ava *saaqi*; pva *masqi*.
سقاية *siqaaya* /n/ silvering mixture for mirrors.
ساقية *saqya* /n pl *sawaaqi*/ water-wheel. (see Pl.E, 1).
سقّا، سقاء *saqqa[1]* /n pl *saqqayiin*/ *[obsol]* water-seller, water-carrier. *bi-ybiiʕ mayya f-ḥaarit is-saqqayiin [prov]* (he sells water in the water-carriers' alley) ≈ he's

carrying coals to Newcastle. *ʃabuu-k is-saqqa maat* (your father, the water-carrier, has died) ≈ polly wants a cracker (phrase taught to parrots).

مسقى *misqa, masqa* /n pl *masaaqi*/ **1** drinking trough or similar device (for watering animals). **2** irrigation ditch or irrigation canal (see Pl.E, 17).

مسقاوى *misqaawi* /adj invar/ requiring regular heavy watering. *fuul misqaawi* type of broad bean which requires heavy irrigation. ‖ *ʃarḍ misqaawi* land bearing a regularly irrigated crop.

اتسقى *ʃitsaqa* or *ʃissaqa* /vi/ passive of *saqa*. -iva *mitsiqi*.

انسقى *ʃinsaqa* = *ʃitsaqa*. -iva *minsiqi*.

سقّى *saqqa*[2] /vt/ to pour (broth or some other liquid) over bread to make *tasqiyya*. ‖ *ʃiḫna ḫa-nsaqqi f-lon-ha - il-muhimm il-mutoor* (are we going to make *tasqiyya* in its colour) what's the colour got to do with it? the important thing is the engine! -vn *tasqiyya*; ava *misaqqi*.

تسقّية *tasqiyya* /n pl *tasaaqi*/ dish consisting of hot broth or the like poured over crumbled bread. *tasqiyya b-laban* bread soaked in milk.

اتسقّى *ʃitsaqqa* or *ʃissaqqa* /vi/ to be prepared (of *tasqiyya*). -iva *mitsaqqi*.

استسقاء *ʃistisqaaʃˀ*, *ʃistisqa* or *(maraḍ) il-ʃistisqa* /n/ *[path]* ascites.

س ك ب ى س see – س و ك ب : *sukubees*

س ك ت [1]

سكت *sikit, sakat (u)* /vi/ to be or become silent, stop speaking, maintain silence. *ʃuskuti laḫsan yismaɛ-ik* be quiet or he'll hear you! *ʃayyaam il-imtiḫanaat tilaaqi l-balad sakta* during exam times you'll find the town quiet. ‖ *min sukaat* (1) quietly, silently. (2) without further ado. -vn *sukuut, sukaat*; ava *saakit*.

¶ *sikit ɛala* to do nothing about, leave be, as in *ma-siktuu-ʃ ɛalayya* they would not leave me be, *ma-skitna ktiir ɛala z-zull* we've suffered humiliation long enough in silence. - *sikit li-* to overlook, let pass, as in *ʃabuu-ya ma-kan-ʃ yuskut-li lamma ylaqii-ni b-atxaaniq* my father wouldn't overlook it when he found me fighting, *ʃana miʃ ḫ-askut-luhum ʃabadan* I will not let them get away with it, *sikitnaa-lu daxal bi-ḫmaar-u [prov]* (we let it pass (when he brought in the bridle), so he came in with the whole donkey) ≈ we gave him an inch and he took a mile.

سكوت *sukuut, sikuut* /n/ silence.

سكتة *sakta* /n pl *-aat*/ **1** *[mus]* pause, rest. *saktit balanʃ* minim rest, half rest. **2** (also *sakta qalbiyya*) heart failure.

سكّيتى *sukkeeti* /adv/ silently, quietly.

اتسكت *ʃitsakat* or *ʃissakat* /vi/ (impersonal) passive of *sikit*. *ɣalaṭaat-u ssakat ɛaleeha* a blind eye was turned to his mistakes. -iva *mitsikit*.

انسكت *ʃinsakat* = *ʃitsakat*. -iva *minsikit*.

سكّت *sakkit* /vt/ to silence, quiet. *ʃawwil ma l-minabbih ḍarab madd ʃiid-u w-sakkit-u* as soon as the alarm rang he put his hand out and shut it off. -vn *taskiit*; ava/pva *misakkit*.

اتسكّت *ʃitsakkit* or *ʃissakkit* /vi/ be silenced, be quieted. -iva *mitsakkit*.

س ك ت [2]

سكّوتى *sakkuuti* /n/ a variety of dried dates.

س ك ر [1]

سكر *sikir (a)* /vi/ to become intoxicated, get drunk. *bi-yiskar kull yoom xamiis* he gets drunk every Thursday. *ʃana skirt ʧiina* I got dead drunk. -vn *sukr*.

سكر *sakar (i)* /vt/ to make drunk, intoxicate. ‖ *sakar-ni gamaal ɣunaa-ha* her sweet singing enchanted me. -vn *sukr*; ava *saakir*.

سكرة *sakra* /n/ drunkenness. ‖ *raaḫit is-sakra w-gat il-fikra [prov]* ≈ the days of revelry have given way to sober reality.

سكران *sakraan* /adj * and pl *sakaara*/ intoxicated, drunk.

سكرى *sukari* /n pl *-yya*/ drunkard.

سكران، سيكران *sakaraan* /n/ *[bot]* Egyptian henbane.

سكير *sikkiir, sakkiir* /n pl *sikkiira*/ drunkard, alcoholic.

أسكر *ʃaskarˀ* /vt/ to make drunk, intoxicate. -vn *ʃiskaar*; ava *muskir*.

مسكرات *muskiraatˀ* /pl n/ alcoholic beverages. *gamɛiyyit manɛ il-muskiraat* The Society for the Prohibition of Alcoholic Beverages.

س ك ر [2]

سكّر *sukkar* /n/ **1** sugar. ‖ *sukkar maɛquud* thick syrup of sugar, water and lemon juice. - *sukkar nabaat* crystallized sugar, rock candy. **2** *(maraḍ) is-sukkar* diabetes.

سكّرة *sukkara* /n/ **1** piece of sugar. **2** poppet, sweetie. *ʃir-raagil da sukkara* he's a charming man.

سكّرى *sukkari* **1** /adj */ sugar(y). *maḫaliil sukkariyya* sugar solutions. ‖ *ʃil-bool is-sukkari [path]* diabetes. **2** /n/ (also *burtuqaan sukkari*) sweet, bland type of orange.

سكّريّة *sukkariyya* /n pl *-aat*/ sugar bowl.

سكّريّات *sukkariyyaat* /pl n/ sugars, saccharides.

سكّر *sakkar* **1** /vt/ to sugar, candy. **2** /vi/ **2a** to become

sweet. *ʕinab misakkar* sweet grapes. **2b** to crystallize, turn into sugar crystals. *ʃil-ʕasal il-ʃiswid lamma yitxazzin mudda ṭwiila yisakkar* molasses crystallizes when it is stored for a long time. - vn *taskiir*; ava/pva *misakkar*.
مسكّرات *misakkaraat* /pl n/ sweets, candy.

[3] س ك ر see [1] ز ك ر : *taskara*

[1] س ك ر ت
سكرتاه *sukurta* <It *sicurtà*> /n/ *[naut]* safety. *ḥabl' sukurta* lifeline. ‖*ʃirka sukurta* maritime insurance company. - *(raagil) sukurta* ship insurance assessor.

[2] س ك ر ت see ء س ك ر ت : *sikirta, sikarta, sikirtu, sikartu*

– س ك ر ت
سكرتير *sikirteer, sikirtiir, sikriteer* <Fr *secrétaire*> /n pl *sikirteriyyiin*/ (male) secretary. *ʃis-sikirteer il-ʕaamm* the secretary general. *sikirteer ʕaamm iʃ-ʃirka* general manager of the company (responsible for internal administration).
سكرتيرة *sikirteera, sikiritiira* /n pl *-aat*/ (woman) secretary.
سكرتارية *sikirtarya* <Fr *secrétariat*> /n/ **1** secretarial staff. **2** secretariat.

س ك ر و ت
سكروتة *sakaroota* /n/ *[obsol]* trade name of a fine cotton-and-silk fabric used to make shirts and galabiyas.

س ك ر ى ن
سكرين *sakariin* /n/ saccharin.

(س ك س)
سكس *saks[1]* <Engl> /n pl *-aat*/ saxophone.
ساكس *saks[2]* /n/ *[bot]* saxifrage.

[2] س ك س see س ك و س : *sakuus*

[1] س ك س ك
سكسك *saksik* /vi/ **1** to chirp (of newly hatched chicks). **2** to click, chatter (of a car engine, owing to excessive valve clearance). - also *saqsaq*. - vn *saksaka, tisaksiik*.

[2] س ك س ك
سكسوكة *saksuuka* /n pl *-aat, sakasiik*/ goatee.

س ك س ن
سكسونيا *saksunya* <T *Saksunya*> /n/ **1** *[obsol]* good quality chinaware. ‖*ʕaql-u saksunya* he's cuckoo. **2** cry of one who sells (and exchanges for anything old or used) various hardware etc.

س ك ش ن
سكشن *sikʃan* <Engl> /n pl *sakaafin*/ *[acad]* discussion section, group of students of a large class who meet with a teaching assistant to go through the material already delivered in lectures.

[1] س ك ع
سكع *sakaʕ (a)* /vt/ to strike, hit. *sakaʕt-u ʕalam* I dealt him a smack. *sakaʕt-u* I gave him a kick. ‖*sakaʕ il-ʃakla* he wolfed down the meal. - *sakaʕ-ni maʕlab* he bluffed me. - *sakaʕit-u rimʃ* she gave him a flirtatious look. - vn *sakʕ*; ava *saakiʕ*; pva *maskuuʕ*.
مسكوع *maskuuʕ* /adj */ screwed-up, messed-up. ‖*ya mara ya maskuuʕa* you whore!
اتسكع *ʃitsakaʕ* or *ʃissakaʕ* /vi/ passive of *sakaʕ*. - iva *mitsikiʕ*.
انسكع *ʃinsakaʕ* = *ʃitsakaʕ*. - iva *minsikiʕ*.
اتسكّع *ʃitsakkaʕ* or *ʃissakkaʕ* /vi/ to loaf, loiter. *maaʃi yitsakkaʕ fiʃ-ʃawaariʕ* he's loafing around in the streets. - vn *tasakkuʕ*; ava *mitsakkaʕ*.

س ك ف
إسكافى *ʃiskaafi* /n pl *-yya*/ *[obsol]* cobbler, shoemaker.

[1] س ك ك
سكّ *sakk[1] (u)* /vt/ **1** to shut, close, lock. *sukk il-baab waṛaak* shut the door behind you. *ʃasukk-u bil-muftaaḥ yaʕni* should I lock it, you mean? ‖*muxx-u maskuuk* he's dense. **2a** to shut off, cut off (a flow). *ʃil-ʕawwaama bi-tsukk il-mayya ʕan is-sifoon* the float shuts off the water from the tank. **2b** to switch off, turn off (radio, tap, light, television, engine etc.). *sukk in-nuur* turn off the light. **3** to snatch, grab. *sakk iʃ-ʃanṭa w-miʃi* he grabbed the bag and left. **4** to hit, punch. *sakkeet-u ʕalʕa* I beat him up. **5**↑ (also *ṣakk*) to mint (money). – /vi/ **6** to close down. *ʃil-maṭʕam da sakk' min zamaan* that restaurant closed down ages ago. **7** *[mech]* to click, chatter (of a car engine). - vn *sakk, sakakaan*; ava *saakik*; pva *maskuuk*.
سكّة *sikka* /n pl *sikak, sikkaat*/ **1** road. *saayiq wi-ʕeen-u ʕas-sikka* driving and keeping his eyes on the road. *waaxid is-sikka ʛyaasa* he travels back and forth along the road. ‖ *ʃis-sikka l-ḥadiid* the railway, the railroad. - *ʛuddaamak sikka* there's a journey in your fu-

ture (fortune telling). -*sikkit is-salaama* safe journey! **2a** route. *ʕeeh ʃashal sikka lil-balad* what's the easiest way to town? *ʔul-li sikkit-u feen* tell me how to get to him. ‖*fis-sikka* (1) on the way, en route, as in *ʔabilt-u fis-sikka* I met him on the way, *ʕandaha talat ʕiyaal wir-raabiʕ fis-sikka* she has three kids and the fourth is on the way, *bet-hum fi-sikkit-i w-ʃana raayiḥ if-fuṷl* I pass (near) their house on my way to work. (2) in the way, as in *ʃinta f-sikkit-i* you're in my way. -*sikkit ʃabu zeed kull-a-ha masaalik [prov]* ≈ where there's a will there's a way. **2b** course of action. *ma-fii-ʃ ʔuddaamak ʃilla sikka waḥda* there is only one course open to you. **3** (telephone) line. ‖*ʔafal is-sikka* to put down the receiver. -*ma-tiʔfil-ʃ is-sikka* keep the line open.

اتسكّ *ʃitsakk*[1] or *ʃissakk*[1] (also *ʃitṣakk* or *ʃiṣṣakk*) /vi/ passive of *sakk*. -iva *mitsakk*.

انسكّ *ʃinsakk*[1] (also *ʃinṣakk*) = *ʃitsakk*[1]. -iva *minsakk*.

س ك ك [2]

سكّ *sakk*[2] *(u)* /vt/ to adulterate, vitiate. *ʃir-raagil da maʕruuf ʕannu ʃinnu bi-ysukk it-taʕmiira lli bi-ybiʕ-ha* that man is known for adulterating the hashish he sells. -vn *sakk, sakakaan*; ava *saakik*; pva *maskuuk*.

سكّة *sakka* **1** /n/ *[slang]* wash-out, loser. *ʃir-raagil da xamma w-sakka* that man is a born loser. **2** /adj invar/ **2a** junky, worthless. *minabbih sakka* a cheap alarm-clock. **2b** adulterated, vitiated. *da wiski sakka* this is watered down whisky.

اتسكّ *ʃitsakk*[2] or *ʃissakk*[2] /vi/ to be adulterated, be vitiated. -iva *mitsakk*.

انسكّ *ʃinsakk*[2] = *ʃitsakk*[2]. -iva *minsakk*.

س ك ك [3]

سكّ *sikk* /interj/ sound made to drive a goat away.

س ك ل ن س

سكلنس *sakalans* <prob It *mescolanza*> /n/ mixture, hodgepodge.

س ك ن [1]

سكن *sikin*[1] *(u)* /vi/ to become occupied, become tenanted. *ʃil-ʕimaara di kull-a-ha sakna* that block is fully occupied. -vn *sakan*; ava *saakin*.

سكن *sikin*[2] or *sakan*[1] *(u)* /vt and vi/ to inhabit, dwell. *ʃif-ʃaʔʔa lli-ḥna saknin-ha* (or *sakniin fiiha*) the flat in which we're living. ‖*beet maskuun* a haunted house. -vn *sakan, sukna*; ava *saakin*; pva *maskuun*.

سكن *sakan*[2] /n/ lodging, accommodation.

سكنى *sakani* /adj/ residential. *manaaṭiʔ sakaniyya* residential areas.

ساكن *saakin* /n pl *sukkaan*/ **1** tenant. *hiyya b-tinʔil il-ʕaff*[i] *lis-saakin ig-gidiid* she's moving the furniture for the new tenant. **2** inhabitant. *huwwa min sukkaan il-manṭiʔa* he is an inhabitant of the area. *sukkaan il-ʕaalam* the world population.

سكّاني *sukkaani* /adj/ population, pertaining to the population. *ʃik-kasaafa s-sukkaniyya* the population density. *ʃil-infigaar is-sukkaani* the population explosion.

مسكوني *maskuuni* /adj/ *[Chr]* ecumenical. *maglis maskuuni* ecumenical council. *ʃil-ḥaraka l-maskuniyya* the Ecumenical Movement.

مسكن *maskan* /n pl *masaakin*/ house, residence. *masaakin faʕbiyya* (government-subsidized) low-income housing developments.

اتسكن *ʃitsakan* or *ʃissakan* /vi/ passive of *sikin*[2] or *sakan*[1]. -iva *mitsikin*.

انسكن *ʃinsakan* = *ʃitsakan*. -iva *minsikin*.

سكّن *sakkin*[1] /vt/ **1a** to house, provide accommodation for. **1b** to settle (people). **2a** to let, rent out, lease out, sublet. *ʃinta bi-tsakkin il-badroon* you're renting out the basement? **2b** to settle (people, land etc.). *ʃiʕaadit taskiin is-suʷees* the resettlement of Suez. -vn *taskiin*; ava/pva *misakkin*.

اتسكّن *ʃitsakkin*[1] or *ʃissakkin*[1] /vi/ passive of *sakkin*[1]. -iva *mitsakkin*.

إسكان *ʃiskaan* /vn/ housing, settlement. *wizaarit il-ʃiskaan (wit-taʕmiir)* Ministry of Housing (and Reconstruction).

س ك ن [2]

سكن *sikin*[3] /vi/ to abate, become dormant. *ʃil-wagaʕ sikin baʕd*[i] *ma xadt id-dawa* the pain abated after I took the medicine. -vn *sukuun*; ava *saakin*.

سكون *sukuun, sikuun* /n/ **1** calm, tranquillity, peace. **2** *[gram]* **2a** vowellessness (of a consonant). **2b** (also *ʕalaamit sukuun*) diacritical mark over a vowelless consonant.

سكينة *sikiina* /prop n/: *rayya wi-skiina* two notorious murderesses in Alexandria in the nineteen-thirties.

سكّن *sakkin*[2] /vt/ **1** to cause to abate or become dormant. *ʃid-dawa sakkin-li l-wagaʕ* the medicine caused my pain to abate. **2** to tranquillize, sedate. *ʃid-dawa sakkin-ni* the medicine sedated me. **3** to calm, calm down. -vn *taskiin*; ava/pva *misakkin*.

مسكّن *musakkin* /n pl *-aat*/ **1** sedative, tranquillizer. **2** pain killer.

اتسكّن ʔitsakkin[2] or ʔissakkin[2] /vi/ passive of *sakkin*[2]. - iva *mitsakkin*.

س ك ن [3]

سكّين sikkiin↑ /fem n/ = *sikkiina*. - common in unelevated speech in the phrase *sarqaa s-sikkiin* ≈ he's lost touch with reality, he's living in a world of false hopes.

سكّينة sikkiina /n pl *sakakiin*/ **1** knife, blade (used, loosely, of any cutting instrument). *sikkiina faransaawi* (farrier's) long-bladed sole knife. *sikkiinit il-maqaṣṣ* blade of the scissors. *sikkiinit taranf* (butcher's) slicing-wheel. *sikkiinit qaṭɛiyya* (plumber's) pipe cutter. ‖*ɛas-sikkiina* subject to scrutiny, as in *baṭṭiix ɛas-sikkiina* ≈ water-melon, guaranteed red and juicy (cut open to prove it). **2** any of various devices having a blade-like shape or a blade-like part (e.g., saddle clip to which the stirrup attaches, knife switch, centre-board of a sailing boat). ‖*faṣal* (or *fataḥ*) *is-sikkiina [elec]* to shut off the power. - *mufaṣṣala sikkiina [carp]* a hinge whose flange is countersunk into the door. **3a** plasterer's trowel. **3b** painter's spatula. — /adj invar/ **4** of the best quality. *quṭn' sikkiina* first grade raw ginned cotton.

س ك ن [4]

سكنات sakanaat /pl n/ barracks.

س ك ن د

سكند sikund <perh Engl> /n/ *[naut]* second officer.

س ك ن د و

سكندو sikundu <It *secondo*> /adj invar/ **1** second class. *tazkara skundu* second class ticket. **2** second. *ʔiṭ-ṭabaq is-sikundu* the second course (in catering). ‖*mitr' skundu* assistant *maître d'hôtel*. — /n pl *-haat*/ **3** *[naut]* second officer.

س ك و س

سكوس sakuus /n/ *[Chr]* alb worn by an Orthodox bishop.

س ك و ى

سكوية sikooya /coll n/ sequoia tree(s).

س ل ا ر

سولار sulaar (also *sular*) /n/ diesel fuel.

س ل ب [1]

سلب salab[1] /coll n/ thick rope(s), hawser(s).

سلبه salaba /unit n, pl *-aat*/ a thick rope, a hawser. *rabaṭ is-salaba fin-naaf* he tied the rope to the yoke.

سلّب sallib /vi/ to tie a thick rope or hawser (around s.th.). *sallibt*[a] *ɛal-baramiil* I roped up the barrels with a stout rope. - vn *tasliib*; ava/pva *misallib*.

اتسلّب ʔitsallib or ʔissallib /vi/ (impersonal) passive of *sallib*. *ʔitsallib ɛala f-feela* the load was roped up. - iva *mitsallib*.

س ل ب [2]

سلب salab[2] *(i)* /vt/ **1** to take away by force. *salab minni kull illi kaan maɛaaya* he took everything I carried on me. **2** to carry away, take away. *ʔik-kuḫḫa salabit nafas-i* the cough left me breathless. ‖*gamal-ha yislib il-ɛuquul* her beauty drives men crazy. **3** to snatch, steal. *salab maḫfaẓt-i* he stole my wallet. ‖*salab faraf-ha* he deflowered her. **4** to rob. *salab-ni min ɣeer m-adri* he robbed me and I wasn't even aware of it. **5** to pillage, sack, plunder. *salabu l-balad wi-nahabuu-ha* they sacked and pillaged the country. **6** to taper. *ʔislib-li l-kumm' min ɛand il-ʔaswira min faql-ak* please taper the sleeve at the cuff. - vn *salb*; ava *saalib*; pva *masluub*.

سلبة salba /pl *-aat*/ instance noun of *salb*.

سلبى salbi /adj */ **1** negative, passive (of a person or attitude). **2** *[elec]* negative.

سلبيّة salbiyya /n/ negativism.

سالب saalib **1** /adj/ negative. *quṭb' saalib* negative pole. **2** /n/ *[elec]* cathode.

مسلوب masluub /adj */ **1** deprived. *masluub ḫaqq-u* deprived of his rights. *masluub il-ʔiraada* robbed of will. **2** wedge-shaped, tapered. *ʔil-qaduum ɛibaara ɛan fakuuf ʔinnama masluub min in-naḫyiteen* the adze is like a hammer, but tapered at both ends. *kumm' masluub* tapered sleeve.

اتسلب ʔitsalab or ʔissalab /vi/ passive of *salab*. - iva *mitsilib*.

انسلب ʔinsalab = *ʔitsalab*. - iva *minsilib*.

س ل ب [3]

أسلوب ʔusluub /n pl *ʔasaliib*/ method, manner, style. *ʔusluub il-ɛamal fif-firka* the work routine in the company.

س ل ب [4] see س ل ب ب : *saliib*

س ل ب ب

سليبّ silibb (also *saliib*) <Fr *slip*> /n pl *-aat*/ Y-fronts, jockey briefs.

س ل ب س

سلبس silibs /n pl *-aat*/ **1** (pair of) rubber-soled shoes. **2** lavatory seat.

س ل ب ط
سلبطة *salbaṭa* /vn/ importunity.
سلباط *silbaaṭ* /n pl *silbaaṭa*/ an importunate pest.
اتسلبط *ʔitsalbaṭ* or *ʔissalbaṭ* /vi/ to importune, beg or plead persistently. *ɋaɛadit titsalbaṭ ɛalee lamma ddaa-ha l-ɛafara gneeh* she kept begging him until he gave her the ten pounds. - vn *tisalbiiṭ*; ava *mitsalbaṭ*.

س ل ت
سلت *salat (i)* **1** /vt/ to pull out, slip out. *salatt^{i} il-xeeṭ mil-ʔibra* I pulled the thread out of the needle. *min faḍl-ak ʔislit il-ɛirɋ^{i} min il-laḥma* please pull the tendons out of the meat. ‖*salat il-ʔiid min* to drop (s.th. one is doing), as in *salatt^{i} ʔiid-i min if-ʃugl^{i} w-ɋumt^{i} ruḥt il-bank* I dropped everything and went off to the bank. **2** /vi/ to slip out. *sigaara salatit mil-ɛilba* a cigarette slipped out of the pack. *law ʃayl-u kida l-ʔawraaɋ mumkin tislit* if you carry it like that the papers may slip out. - vn *salataan, salt*; ava *saalit*; pva *masluut*.
سلت *salt* /adj invar/ flat. *sidr-a-ha salt* she is flat-chested. ‖*fustaan salt* an ill-fitting, shapeless dress.
اتسلت *ʔitsalat* or *ʔissalat* /vi/ passive of *salat* 1. - iva *mitsilit*.
انسلت *ʔinsalat* = *ʔitsalat*. - iva *minsilit*.
سلّت *sallit* /vt/ to pull out one by one. - vn *tasliit*; ava/pva *misallit*.
اتسلّت *ʔitsallit* or *ʔissallit* /vi/ **1** passive of *sallit*. **2** to steal away, slip away. - ava/iva *mitsallit*.

س ل ت ك س
سلوتكس *silutiks* /n/ compressed cardboard (used, e.g., for car interiors).

س ل ت ي ب
سلوتيب *silatiib* <Engl> /n/ sellotape, scotch tape.

س ل ت ي ر
سوليتير *suliteer* <Fr> /n pl *-aat*/ solitaire, diamond ring.

س ل ح
سلاح *silaaḥ* /n pl *ʔasliḥa*/ **1a** weapon. *silaaḥ naari* firearm. *ḥaasib is-silaaḥ yiṭwal* watch it, the gun may go off! ‖*suuɋ is-silaaḥ* name of a section of central Cairo. - *waaḥid min taḥt is-silaaḥ* (1) one who has risen from the ranks. (2) an upstart. **1b** /coll/ arms, armaments. *bi-ygiibu slaḥ-hum min iṣ-ṣiin* they get their arms from China. ‖*ʔis-silaaḥ il-ʔabyaɋ* knives, bayonets and any other blades used as weapons. **2** *[mil]* service (of the Armed Forces). ‖*silaaḥ iṭ-ṭayaraan* the Air Force. **3** blade. *silaaḥ miḥraat* ploughshare (see Pl.D, 20). *silaaḥ muus* blade of a straight razor. **4** *ʔis-silaaḥ* (caterer's) coffee-making equipment (pots, cup etc.).
سلاحليك *silaḥliik* /n/ **1** gun rack. **2** small-arms storage room (e.g., in a police station).
سلّح *sallaḥ* /vt/ **1** to arm. *ʔil-quwwaat il-musallaḥa* the armed forces. **2** *[constr]* to reinforce. *xarasaana msallaḥa* reinforced concrete. ‖*waraɋ zeet misallaḥ* wired oil-seal paper. - vn *tasliiḥ*; ava *misallaḥ*; pva *musallaḥ*.
اتسلّح *ʔitsallaḥ* or *ʔissallaḥ* /vi/ **1** to be armed, arm oneself. *da mitsallaḥ bi-sikkiina* that man is armed with a knife. **2** to be reinforced. - ava/iva *mitsallaḥ*.

س ل ح ف
سلحفة *silḥifa, sulḥifa* /n pl *-aat, salaaḥif*/ tortoise. - also *siḥlifa, suḥlife, ziḥlifa, zilḥifa, zuḥlifa, zulḥifa*.

– س ل ح ل see س ل ح : *silaḥliik*

س ل خ
سلخ *salax (u)* /vt/ **1** to flay, skin. *salaxit il-ʔaraanib* she skinned the rabbits. ‖*ʔabu rigl^{i} masluuxa* the bogeyman (a creature described as half man and half donkey and having flayed legs). **2** to skin, abrade. *wiɋiɛt^{i} w-salaxt^{i} rukbit-i* I fell and skinned my knee. **3** to burn (of the sun). *ʔif-ʃams^{i} salaxit-ni xaaliṣ* I got badly sunburned. **4** to punish harshly. - vn *salx, siliix*; ava *saalix*; pva *masluux*.
سلخ *salx* /vn/ skinning. ‖*budrit salx* spot remover.
سلخة *salxa* /n pl *-aat, silax*/ **1** strip. **2** *[print]* galley.
سليخة *siliixa* /inst n/ a skinning. *kazlak siliixa* skinning knife.
سلخانة *salaxaana* /n pl *-aat*/ slaughterhouse.
اتسلخ *ʔitsalax* or *ʔissalax* /vi/ passive of *salax*. - iva *mitsilix*.
انسلخ *ʔinsalax* = *ʔitsalax*. - iva *minsilix*.
سلّخ *sallax* **1** /vt/ to make an incision in. **2** /vi/ **2a** to become chapped or raw (of skin). **2a** to become sunburned (of skin). - vn *tasliix*; ava/pva *misallax*.
اتسلّخ *ʔitsallax* or *ʔissallax* /vi/ **1** to become chapped or raw (of skin). **2** to become sunburned (of skin). **3** to be incised. - ava/iva *mitsallax*.

س ل ر see س ل ا ر : *sular, sulaar*

س ل س [1]
سلس *salas* /n/ *[path]* incontinence. *salas bool [path]* enuresis. ‖*ɛandu salas fil-kalaam* he's a chatterbox, he suffers from logorrhoea.

سلس *salis↑* /adj/ fluent, articulate. *kalaam-u salis* he's a good conversationalist.
سلاسة *salaasa* /n/ **1** docility, tractability. **2** fluency (of style).

س ل س [2] see ت ل ت: *sulus, sulaasi, saluus, saalisan, musallas, tasliis*

س ل س ف –
سلسفيل *salsafiil* /n/: *yilɛan salsafiil-ak [abus]* ≈ curse your whole family tree! - also *sansafiil.*

س ل س ل
سلسل *salsil* /vt/ **1** to arrange in order, assign to a series. *bi-ylimm iṭ-ṭalabaat wi-ysalsil-ha* he collects the applications and assigns serial numbers to them. **2** to serialize. **3** to chain up, put in chains. ‖*ɋird' msalsil* a pest, a nuisance. - vn *salsala*; ava/pva *misalsil, musalsal.*
مسلسل *musalsal* /n pl *-aat*/ series, serial (on radio, television etc.).
مسلسلة *musalsala* /n pl *-aat*/ = *musalsal.*
سلسلة *silsila* /n pl *salaasil*/ **1** chain. *silsilit mafatiiḥ* key chain or key-ring. ‖*ʏurzit silsila* chain-stitch. *-silsilit iḍ-ḍahr* spinal column. **2** range, chain. *silsilit gibaal* mountain range. **3** sequence, chain. *silsilit ʕaḥdaas* a sequence of events. **4** series (of a publication etc.).
سلسيل *salasiil* /n/ spinal column.
اتسلسل *ʔitsalsil* or *ʔissalsil* /vi/ passive of *salsil.* - vn *tasalsul*; ava/iva *mitsalsil.*
تسلسل *tasalsul↑* /n/ sequence.

س ل ط [1]
سلطة *sulṭa'* /n pl *-aat*/ power, authority. *ʔis-sulṭa l-ɛaskariyya* military authority. *ʔis-sulṭa t-tafriɛiyya* legislative power. *ʔis-sulṭa t-tanfiziyya* executive power. *ʔis-sulṭa l-qaḍaʔiyya* judicial power. *lu sulṭaat il-muʃrif il-ɛaamm* he has the powers of General Overseer.
سلطان *sulṭaan* /n/ **1** effective majestic power. **2** /pl *salaṭiin*/ sultan. *kull' ʔinsaan fi-nafs-u sulṭaan [prov]* every man is a sultan in his own eyes. *ʔil-mixoozaq yiʃtim is-sulṭaan [prov]* (the impaled man will curse the sultan) in extremities a man will do anything. *ʔil-ʔaɛwar been il-ɛumyaan sulṭaan [prov]* among the blind a one-eyed man is king. *bi-fluus-ak bint is-sulṭaan ɛaruus-ak [prov]* if you are rich the sultan's daughter will marry you. ‖ *ʔana sulṭaan zamaan-i* I'm the master of my own time. I can do as I please. See further under س ل ط ن
سلطاني *sulṭaani* /adj invar/ splendid, regal, first-class. *ɋaɛda sulṭaani* a princely party. *nahaar sulṭaani* a fine day. ‖*ḥibr' sulṭaani* ink made by boiling the singed ingredients in water.
سلطانيّة *sulṭaniyya* /n pl *-aat, salaṭiin*/ **1** bowl. **2** *[plumb]* bowl of a pedestal lavatory.
سلّط *sallaṭ* /vt/ **1** to incite, stir up (against s.o.). *ḥadd' msallaṭ-kum ɛala baɛḍ* is someone setting you against each other? **2** to point, aim. *sallaṭ ɛaleehum xarṭuum il-mayya ɛaʃaan yifarraq-hum* he directed the water hose at them to disperse them. - vn *tasliiṭ*; ava/pva *mısallaṭ.*
اتسلّط *ʔitsallaṭ* or *ʔissallaṭ* /vi/ passive of *sallaṭ.* - iva *mitsallaṭ.*

س ل ط [2]
سلطة *salṭa'* <It *salto*> /n pl *-aat/ [gym]* somersault, flip.
سلطة *sulṭa*[2], *salṭa*[2] /n/ regulation khaki tunic (during British occupation).
سلطة *salaṭa* <Gk *salata*> **1** /n pl *-aat*/ side-dish, e.g., a dip, cold vegetables or salad, eaten with or before the main meal. *salaṭit ṭiḥiina* side-dish of sesame-seed paste. *salaṭa xaḍra* green salad. **2** /no pl/ mess, muddle. *xalla l-ḥikaaya salaṭa* he made a mess of the whole thing.

س ل ط ح see ص ل ط ح: *salṭaḥ*

س ل ط ن see also س ل ط [1]
سلطن *salṭan* /vi/ **1** to settle back and relax, take one's ease (being in an expansive mood and feeling oneself to be in one's element). *ʃuuf-u ɋaaɛid mitsalṭan* see how blissfully he's sitting there! **2** to reach a point of inspired virtuosity (usually of a singer). – /vt/ **3** to make comfortable. *ʔitnaḥnaḥ wi-salṭan nafs-u w-bada yʏanni* he cleared his throat, settled himself, and began to sing. ‖*salṭan il-maɋaam* to play introductory music (in the same mode as that which will follow) in order to set the mood. - vn *salṭana*; ava/pva *misalṭan.*
سلطنة *salṭana* **1** /vn/ expansive luxurious relaxation. *kaan ɋaaɛid ʔaaxir salṭana b-yifrab ʃiifa* he was totally relaxed smoking his narghile. **2** /n pl *-aat*/ sultanate.
اتسلطن *ʔitsalṭan* or *ʔissalṭan* = *salṭan* 1 and 2. - ava *mitsalṭan.*

س ل ع
سلعة *silɛa↑* /n pl *silaɛ*/ commodity.

س ل ع و see also س ل و ع
سلعوّة *salaɛawwa* /n/ ugly skinny person. *ɛamla zayy is-salaɛawwa* she looks like a skinny witch.

س ل ف [1]
سلفة *sulfaˆ* /n pl *-aat, sulaf/* (usually official) loan of money. *ruħt il-bank[i] w-ɛamalt[i] sulfa* I went to the bank and took out a loan.
سلف *salaf[1]* /n/ borrowing, loan. *xadt ik-kitaab da salaf* I took the book on loan. *ʕiddii-ni xamsa gneeh salaf* lend me five pounds! ‖ *ʕis-salaf talaf [prov]* ≈ lend and lose; so play fools. *kull-u salaf wi-deen [prov]* ≈ what you sow you reap.
سلفيّة *salafiyya* /n pl *-aat/* official loan, (of money) imprest.
سلّف *sallif, sallaf* /vt/ to lend, loan. *sallifit-ni fustaan* she lent me a dress. *bi-ysallif filuus bil-faayiz* he makes loans at usurious rates. ‖ *bank it-tasliif (iz-ziraaɛi)* agricultural loan bank (for seeds, fertilizer etc.). - vn *tasliif*; ava/pva *misallif*.
استلف *ʕistalaf* /vt/ to borrow. *ʕistalaft[i] min miraat-i gneeh* I borrowed a pound from my wife. - vn *ʕistilaaf*; ava *mistilif*.

س ل ف [2]
سلف *silf* /n pl *salaayif/* husband's brother.
سلفة *silfa* /n pl *salaayif/* husband's brother's wife.
سلف *salaf[2]* /coll n/ ancestors. *ʕis-salaf iṣ-ṣaaliħ* the venerable forefathers. ‖ *xayru xalaf li-xayri salaf* ≈ like good father like good son.
أسلاف *ʔaslaaf* /pl n/ predecessors.
سالف *saalif* /adj/ preceding, prior, previous. ‖ *saalif iz-zikr* aforementioned. - *min qadiim iz-zamaan wi-saalif il-ɛaṣr wil-ʕawaan* ≈ once upon a time.
سوالف *sawaalif* /pl n/ sideburns, sideboards.

س ل ف ا
سلفا *salfa, salfa* <Engl> /n/ sulphonamide.

س ل ف ا ت
سلفات *salafaat, sulfaat* <Fr> /n/ sulphate. *sulfaat in-naħaas* copper sulphate.

س ل ف ا ن
سلوفان *sulufaan, silufaan* <perh Fr> /n/ cellophane.

س ل ق [1] see also س ل و ق
سلق *salaq (u)* /vt/ to boil (solids, especially food). *ʕusluq il-makaroona w-baɛdeen ṣaffii-ha* boil the pasta and then drain it. ‖ *salq[i] beeḍ* a hasty slapdash job. - vn *salq, siliiq*; ava *saaliq*; pva *masluuq*.
سليق *siliiq* /n/ boiled food. *siliiq fi-siliiq* boiled bland food, hospital fare.
اتسلق *ʕitsalaq* or *ʕissalaq* /vi/ to be boiled (of solids, especially food). - iva *mitsiliq*.
انسلق *ʕinsalaq* = *ʕitsalaq*. - iva *minsiliq*.

س ل ق [2]
سلق *salq* /coll n/ chard (used as a vegetable).
سلقة *salqa* /unit n, pl *-aat/* a chard plant.
سلقاية *salqaaya* = *salqa*.

س ل ق ( ) [3]
سلوقي *siluuqi* /n/ saluki.
تسلّق *tasalluqˆ* /n/ climb, ascent.

س ل ق ط see ص ل ق ط : *salqaṭ*

س ل ق و ن
سلقون *salaqoon* <perh T *sülüğen*> /n/ red lead. - also *zalaqoon*.

س ل ك
سلك *salak[1] (u)* /vt/ to follow, adhere to. *ħa-nusluk ṭariiqa muɛayyana* we will follow a particular course. - vn *suluuk*; ava *saalik*; pva *masluuk*.
سلك *silik, salak[2] (a)* /vi/ **1** to pass (through). *ma-b-yislak-ʃ[i] fil-ħaara di ʕilla l-ɛarabiyya n-nannuusa* only a tiny car can pass through this alley. *ma-b-yislak-ʃ[i] fil-ʕibra ʕumm[i] xurm[i] dayyaq* it won't pass through a narrow-eyed needle. *ʕil-miʃṭ[i] b-yislak fi-faɛr-i b-suhuula* the comb passes easily through my hair. **2** to manage, cope. *miʃ ħa-tiqdar tislak fiʃ-fuxlaana di* you won't be able to cope with this job, you aren't up to handling this job. *sib-ni ʕaslak maɛaa* let me handle him. **3** to become disentangled (of hair). - vn *salakaan*; ava *saalik*.
سلوك *suluuk* /n/ behaviour. *bi-niwṣif waaħid suluuk-u miʃ kuwayyis* we're describing someone whose behaviour is not nice. *ʃihaadit ħusn[i] seer wi-sluuk* certificate of good conduct, testimonial.
سالك *saalik* **1** /adj */ **1a** clear, unblocked. ‖ *ḍamiir-u saalik* his conscience is clear. - *ʕiid-u salka* he has a skilled hand. **1b** untangled. *faɛr[i] saalik* untangled hair. **2** /n */ *[Isl]* one who follows the Sufi way.
سلك *silk* /pl *ʔaslaak, suluuk/* **1a** wire(s). *ʃibaal silk* wire ropes. *silk it-tilifoon* telephone wire(s). ‖ *silk[i] ʃilal, silk[i] maṭbax* or *silk[i] ʕalamunya* steel wool, scouring steel. **1b** wire mesh. **1c** flex. *silk ir-radyu* radio cord. **1d** bicycle spoke. **2** gold necklace with light-weight pendants. **3** corps (in civil service). *silk[i] qaḍaaʕi* judicial corps. *silk[i] diblumaasi* diplomatic corps.
سلكة *silka* /unit n, pl *-aat, silak/* a piece of wire.
سلكاية *silkaaya* /unit n/ a thin short wire.

أسلك ʔaslak /el/ more/most clear, unblocked or untangled.
سلّاكة sallaaka /n pl -aat/ any instrument used for cleaning or unblocking pipes, tubes etc., such as a pipe-cleaner, rubber plunger for clearing drains, bottle brush.
مسلك maslakˀ /n pl masaalik/ path, course. *masaalik bawliyya* urinary tracts. ‖*sikkit ʔabu zeed kull-a-ha masaalik [prov]* where there's a will there's a way.
سلّك sallik /vt/ **1** to clear, unblock, (pipes etc.). *sallik zoor-ak* clear your throat! *sallikt il-ballaaɛa* I unblocked the drain. **2** to pick (teeth) clean. *sinaan it-tirsª ɛawza tasliik* the teeth of the cog need cleaning. *bi-nsallik is-sinaan bil-xilla* we clean our teeth with a *xilla*. - vn *tasliik*; ava/pva *misallik*.
تسليكة tasliika /inst n, pl -aat/ a clearing, an unblocking. *maɛaana ţurumba kawitfˈ lit-taslikaat* we have a rubber plunger for clearing operations.
اتسلّك ʔitsallik or ʔissallik /vi/ passive of *sallik*. - iva *mitsallik*.

س ل ك س
سلكس siliksˌ<perh Fr *silex*> /n/ silica.

س ل ل ¹
سِلّ sill /coll n/ thorn(s).
سلّة silla /unit n, pl -aat/ a thorn.
سلّاية sillaaya /unit n, pl -aat/ a thorn. ‖*fil-wiffˈ mraaya w-fil-qafa sillaaya [prov]* a mirror for the face and a thorn for the nape (said of a back-stabber).

س ل ل ²
سَلّ sallˈ *(i)* /vt/ **1** to infect with tuberculosis. *bi-yquulu ʔinn iţ-ţabafiir bi-ysill il-mudarris* people say that teachers contract tuberculosis from chalk, **2** to waste, emaciate. *ʔil-hammˈ sall-a-ha* sorrow made her waste away. - vn *sull*; ava *saalil*; pva *masluul*.
سُلّ sull /n/ tuberculosis.
مسلول masluul /adj * and pl masaliil/ **1** affected by tuberculosis, tuberculous. **2** emaciated, wasted.
اتسلّ ʔitsall or ʔissall /vi/ **1** to contract tuberculosis. **2** to waste away. - ava *mitsall*.
انسلّ ʔinsall = ʔitsall. - ava/iva *minsall*.

س ل ل ³
سَلّ sallˀ *(i)* **1** /vt/ to draw, unsheath (a sword, a dagger etc.). **2** /vi/ to become erect (of the penis of a quadruped). - vn *sall, salalaan*; ava *saalil*; pva *masluul*.
سلالة sulaala /n pl -aat/ strain, stock. *ʔaḥsan sulaala fil-xeel il-xeel il-ɛarabi* the best breed of horse is the Arabian.
مسلّة misalla /n pl -aat/ **1** heavy needle for sewing sacking, baskets or upholstery, packing-needle. **2** (also *masalla*) obelisk.
اتسلّل ʔitsallil or ʔissallil /vi/ **1** to trespass, infiltrate. **2** *[soccer]* to penetrate as far as the goal before one's team shoots for it, make an offside move (of a forward). - vn *tasallulˀ*; ava *mitsallil*.

س ل ل ⁴
سلّة sallaˈˀ /n pl silal/ basket. *koorit salla* basketball.
سلّال sallaal /n pl -aat, salaali/ basket woven from split cane.

س ل ل و م
السلّوم salluum /prop n/ Salum, a Mediterranean port in north-west Egypt and border post with Libya.

س ل م ¹
سلم silim *(a)* /vi/ to stay safe. *ʔilaah-i tirgaɛ saalim li-ɛyaal-ak [beggars]* ≈ may God return you safely to your children! ‖*min xaaf silim [prov]* (he who fears is safe) ≈ prudence makes for safety. - *tislam* thank you! - *yislam buqq-ak* well said! - *ʔil-ʔamrˈ ma-yislam-ſ* ≈ well, nobody's perfect. - *miſ kullˈ marra tislam il-garra [prov]* ≈ don't push your luck! - *tislam ʔiid(-ak)* (may (your) hand stay safe) expression of thanks or congratulation to one who has done or made something with his hands. - vn *salaama*; ava *saalim*.
سلامة salaama /n/ **1** safety, wellbeing. *ʔana mihtammˈ b-salamt-u* I'm interested in his welfare. *ɛayza ḥaaga min il-balad. - la ɛayza salamt-ak* 'Do you want anything from town?' 'No (thank you), just your safe return.' *laazim titʔakkid min salaamit il-ɛarabiyya qablˈ ma tsaafir biiha* you must make certain the car is in sound condition before you travel with it. ‖*maɛa s-salaama* good-bye (said to one departing). - *salaamit-* invocation of good health, as in *salamt-ak* I hope you get better soon, *hiyya faţma ɛayyaana - salamit-ha* is Fatma sick? I hope she feels better soon. - *bi-salaamit-* parenthetical formula of concern, as in *ʔizzayy ibn-ik bi-salamt-u* how is your son, may God keep him safe; - also used derisively, as in *ʔil-ḥaraami b-salamt-u xad kull illi ɛandi* the thief - bless his black heart - robbed me blind. - *ḥamd-illa ɛas-salaama* (praise God for (His) safekeeping) expression of felicitation said (1) to a traveller arriving at the end of a journey or to one returning after an absence, (2) to one recovered from

an illness, (3) to a woman after giving birth. **2** integrity, intactness. *salaamit il-waḥda l-waṭaniyya* the integrity of national unity.

سالم *saalim* /ava */ safe, sound, intact. *saalim ɤaanim* (1) safe and sound. (2) scot-free.

أسلم *ʔaslam*[1] /el/ more/most safe, sound or intact. *ʔaslam luhum yaxdu l-ɋaṭr* it's safer for them to take the train.

سلام *salaam* /n/ **1** peace. *ḥamaamit salaam* dove of peace. *ʔis-salaamu ɛaleekum* (peace be upon you) the traditional greeting among Muslims, eliciting the response *wi-ɛaleekum is-salaam*. ‖*ya salaam* exclamation of amazement ≈ my goodness! oh my! as in *ya salaam ɛal-bint il-ḥilwa di* oh what a pretty girl! *ya salaam ɛala ɋillit ʔadab in-naas* my God, how rude people are! - *wis-salaam* and *wis-salaamu ɛaleeku* and that's that! and that's all there is to it. **2a** salute, greeting. *ʔiẓ-ẓaabiṭ laazim il-ɛaskari yiḍrab-lu* (or *yaxud-lu) salaam* a private has to salute an officer. ‖*kutr is-salaam yiɋill il-maɛrifa [prov]* excessive formality hinders friendship. - *loola salaam-ak sabaɋ kalaam-ak la-kalt*[i] *laḥm-ak ɋabl*[i] *ɛḍaam-ak* ≈ had you not greeted me nicely I would have gobbled you up (traditional response which a monster makes to a greeting in children's stories). **2b** musical salutation, fanfare. *salaam malaki* (or *gumhuuri*) musical rendering of the national anthem.

سلاملك *salamlik* <T *selâmlık*> /n/ **1** ground-floor area reserved for the reception of male guests (especially in a large house). **2** (loosely) ground floor.

سليم *saliim* /adj pl *sulaam*/ sound, healthy, intact. *manṭiɋ saliim* sound logic. *saliim in-niyya* well-intentioned. *ʔil-ɛigl*[i] *saliim* the calf is healthy. *ʔil-ḥamdu li-llaah gat saliima* thank God, it turned out all right. ‖*raagil saliim* an upright man.

سلّم *sallim* /vt/ **1** to hand over. *sallimna ʔawraɋ-na lil-mudarrisa* we handed our papers in to the teacher. *sallim nafs-u* (1) he gave himself up. (2) he presented himself to the authorities (for, e.g., national service). *sallim ʔamr-u li-llaah* ≈ he resigned himself. **2** to keep (s.o.) safe (of God). *ʔallaah yisallim-ak* (may God keep you safe) response to formulae containing the words *sallim* or *salaama* (e.g., *sallim-li ɛalee, maɛa s-salaama*) or to any polite enquiry after one's own or another's health or well-being. ‖*ya salaam sallim* exclamation of amazement ≈ oh wow! well I never! — /vi/ **3** to greet, give a greeting. *sallimii-li ɛala waldit-ik* say hello to your mother for me. *ɛumuuman in-naas bi-ysallimu bil-ʔiid* usually people greet each other by shaking hands. ‖*sallim* shake hands! - vn *tasliim*; ava *misallim*.

تسليم *tasliim* /n pl *-aat*/ *[mus]* refrain, recurring passage in an instrumental piece.

تسليمة *tasliima* = *tasliim*.

اتسلّم *ʔitsallim* or *ʔissallim* /vi/ passive of *sallim*. - iva *mitsallim*.

تسلّم *tasallum* /vn/ receipt.

مسالم *misaalim* /adj/ peaceful, calm.

أسلم *ʔaslam*[2], *ʔislam* /vi/ to become a Muslim. - vn *ʔislaam*; ava *muslim*.

الإسلام *ʔil-ʔislaam* /prop n/ Islam.

إسلامي *ʔislaami* /adj */ Islamic.

مسلم *muslim* /n */ a Muslim. see further under م س ل م

استلم *ʔistalam* /vt/ to receive, accept. *baɛd*[i] *ma stalamt ʔif-ʃahaada kunt*[i] *b-axud-ha lil-maktab* after I got the certificate I used to take it to the office. *ʔir-rayyis bi-yistilim ṭalabaat iz-zabaayin* the waiter takes the orders of the customers. ‖*ʔistalam fuxl(-u)* he started work. - vn *ʔistilaam*; ava *mistilim*.

استسلم *ʔistaslim* /vi/ to give in, surrender. *ʔistaslimt*[i] *l-naṣiib-i* I surrendered to my fate. - vn *ʔistislaam*; ava *mistaslim*.

س ل م [2]

سلّم *sillim* /n pl *salaalim*/ **1** staircase, stairs. *ṭiliɛna is-sillim illi ywaddi ɛal-balakoona* we climbed the stairs leading to the balcony. **2** ladder. ‖*sillim il-ɋafz* diving-board. - *ʔis-sillim wit-tiɛbaan* snakes and ladders (children's game). **3**↑ *[mus]* scale.

سلّمة *sillima* /n pl *-aat, salaalim*/ step (of a stairway).

سلّماية *sillimaaya* = *sillima*.

س ل م [3]

سلّميّة *sallamiyya* /n pl *-aat*/ *[mus]* smallest member of the *naay* family with a high-pitched tone. - see also *ḥuffaaṭa* and *ɛuffaaṭa*.

س ل م [4]

see س ل ل و م : *salluum*

س ل م ك

سلمكّة *salamikka* /coll n/ senna, senna pod(s), senna leaflet(s). - also *sanamikka*.

س ل م ل ك

see س ل م [1] : *salamlik*

س ل م ن

سلمون *salamun* <prob Engl *salmon*> /n/ name used loosely for several kinds of tinned fish (e.g. mackerel).

س ل ن د ر

سلندر *silindar* (also *filindar*) <Engl> /n pl *-aat*/ *[mech]* cylinder.

س ل و [1]
سلا *sala[1] (a)* /vt/ to get over (the memory of), forget, put out of one's mind. *fuufi ħadd' yxallii-ki tisli l-ħuzn' da* find someone who will help you forget this sorrow. - vn *silwaan, suluww*; ava *saali*; pva *masli*.
سلوان *silwaan* /vn/ consolation, comfort.
سلوانة *silwaana: ħilwaana f-silwaana* by stealthy degrees. *ʕamaluu-ha ħilwaana f-silwaana w-xallaṣu l-ʔakl* by stealthy degrees they managed to polish off all the food. *qaʕadu ykallimuu-ni w-ħilwaana f-silwaana laqet-hum mikattifin-ni* they went on talking to me till I found they'd tied me up without my realizing it. *ga qaʕad maʕaana marra w-baʕdeen ʕamal-ha ħilwaana f-silwaan wala ʕad-f' bi-ysib-na* he sat with us once and then, somehow or other, he ended up never leaving us.
سلوى، سلوة *salwa* /n/ consolation, comfort. *salwit-i f-samaʕ il-mazziika l-xafiifa* I relax by listening to light music.
سلّى *salla[2]* /vt/ **1** to divert the mind from, take one's mind off. *salli ʏulb-ak* (or *hamm-ak*) keep your mind off things. *salli ṣyaam-ak* take your mind off the fast (it will be easier to endure). ‖*salli waqt-ak* keep busy, fill your time. **2** to amuse, divert. *ħafla musalliyya* an entertaining party. - vn *tasliyya*; ava *musalli*; ava/pva *misalli*.
تسلية *tasliyya* /n pl *tasaali*/ amusement, pastime.
تسالى *tasaali* /pl n/ snacks.
مسلّيات *musalliyaat* /pl n/ **1** amusements, diversions. **2** assorted nuts, chick-peas, melon and sunflower seeds etc., consumed to kill time.
اتسلّى *ʔitsalla* or *ʔissalla* /vi/ to find amusement or diversion, fill up time. *bi-ygib-lu salaṭaat yissalla fiiha wi-titfitiħ ʃahiyyit-u* he brings him salads to busy himself with and to whet his appetite. *bi-yissalla ʕaleena* he amuses himself at our expense. *miʒawwaʏ min ʃuʏl-u w-gaay yissalla fil-ʕiyaada* he's staying away from work and comes to fritter away his time in the clinic. *bi-yitsalla bil-ʔakl* he kills time by eating. - iva *mitsalli*.

س ل و [2]
سلو *silw* /n/ custom, habit, tradition.

س ل ع و see also س ل ع و
مسلوع *misalwaʕ* /adj */ skinny, scraggy.

س ل و ق see also س ل ق [1]
سلوق *salwaq* /vt/ to do or perform in a hasty, slipshod manner. - vn *salwaqa*; ava/pva *misalwaq*.
اتسلوق *ʔitsalwaq* or *ʔissalwaq* /vi/ passive of *salwaq*. - vn *tisalwiiq*; iva *mitsalwaq*.

س ل و ى ت
سيلويت *siluweet* <Fr> /n/ silhouette, image cut out from dark material and mounted on a light background.

س ل ى [1]
سلى *sala[2] (i)* /vt/ to melt (butter), render down (fat). - vn *saly*; ava *saali*; pva *masli*.
مسلى *masliʔ* /n/ clarified butter.
اتسلى *ʔitsala* or *ʔissala* /vi/ **1** passive of *sala[2]*. **2** to lose weight. - ava/iva *mitsili*.
انسلى *ʔinsala* = *ʔitsala*. - ava/iva *minsili*.

س ل ى [2] see س ل و [1]: *tasliyya, tasaali, misalliyyaat*

س ل ى م –
سليمانى *sulaymaani* <perh T *sülümen*> /n/ mercuric chloride.

س م ا ر
سمار *samaar[1]* /coll n/ rush(es).
سمارة *samaara* /unit n, pl *-aat*/ a reed, a rush.

س م ب س ك see س ن ب س ك

س م ب ك see س ن ب ك

س م ب ك س see س ن ب س ك

س م ب ل see س ن ب ل

س م ت ر ى
سمتريّة *simitriyya* <It *simmetria*> /n/ symmetry, evenness. *xallii-ha kull-a-ha simitriyya waħda* make it all even.

س م ت و ت see س ح ت و ت: *samtuut*

س م ج
سمج *simig* /adj * and pl *sumaga*/ boorish, churlish, loutish.
أسمج *ʔasmag* /el/ more/most boorish, etc.
سماجة *samaaga* /n/ boorishness, loathsomeness.

س م ح
سمح *samaħ (a)* /vi/ to give permission. *samaħt-i-lu bil-kalaam* I allowed him to speak. *m-asmaħ-f' l-ħadd' (b-ʔinnu) yudxul beet-i* I don't allow anyone to enter my house. *ʔismaħ-li ʔaqul-lak* permit me to inform you .... *ʕadad ir-rukkaab il-masmuuħ (bii)* the permitted number of passengers. ‖*tismaħ* would you mind, as in

tismaḥ tiqul-li l-mudiir feen could you tell me where the director is? - *ʃismaḥ-li* excuse me. - *law samaḥt* (if you) please. - *la samaḥ allaah* God forbid! - vn *samaaḥ*; ava *saamiḥ*; pva *masmuuḥ*.

سماح *samaaḥ* /n/ permission, leave. ‖*samaaḥ il-marraa-di* pardon this time, as in *samaaḥ il-marraa-di bass[i] ma-tiɣmil-haa-ʃ taani* I'll let you off this time, but don't do it again, *samaaḥ il-marraa-di min faql-ak* please let me off the hook this time. - *ʃahl is-samaaḥ il-milaaḥ* nice people.

سماحة *samaaḥa* /n/ **1** generosity, kindness. **2** title accorded to a non-Egyptian mufti.

مسموحات *masmuḥaat* /pl n/ articles allowed through customs without payment of duty.

سمح *simiḥ* /adj */ kind, forgiving. *ʔalb-u kull-u raḥma w-nifs-u simḥa* he's a very merciful and forgiving man. ‖*wiff[i] simiḥ* cheerful, kindly face.

سامح *saamiḥ* /vt/ to pardon, forgive. *ʃallaah yisamḥ-ak* God forgive you! (to one who has wronged another). *ʃil-misaamiḥ kariim [prov]* ≈ to forgive is generous. - vn *misamḥa, musamḥa*; ava *misaamiḥ*.

مسامحة *musamḥa* **1** /vn/ forgiveness, pardon. **2** /n pl -*aat*/ *[obsol]* vacation, holiday(s).

اتسامح *ʃitsaamiḥ* or *ʃissaamiḥ* /vi/ **1** to be tolerant, big-hearted or indulgent. **2** to be forgiven. - vn *tasaamuḥ*; ava/iva *mitsaamiḥ*.

استسمح *ʃistasmaḥ* /vt/ **1** to ask (s.o.) for forgiveness. *ʃuqṣuri ʃ-ʃarr[i] wi-stasmaḥii* put an end to the unpleasantness and ask him for forgiveness. **2** to ask permission of. *ʃistasmaḥt[i] maama fil-mirwaaḥ lis-siima* I asked mother if I could go to the cinema. *ʃastasmaḥ-ak* ≈ would you permit me, please .... - vn *ʃistismaaḥ*; ava/pva *mistasmaḥ*.

س م د

سماد *samaad, simaad* /n pl *ʃasmida*/ fertilizer. *simaad baladi* organic fertilizer, manure. *simaad kimaawi* chemical fertilizer.

سمّد *sammid* /vt/ to fertilize, manure. - vn *tasmiid*; ava/pva *misammid*.

اتسمّد *ʃitsammid* or *ʃissammid* /vi/ to be fertilized, be manured. - iva *mitsammid*.

س م ر [1]

سمر *samar[1]: ʔaɛdit samar* an evening party. *ḥaflit samar* an evening party or gathering in the open air (usually around a camp-fire).

سمير *samiir* /n pl *summaar*/ a participant in a *musamra*.

سامر *saamir[1]* /n/ informal evening performance of traditional entertainments (i.e. skits, singing). ‖*masraḥ is-saamir* government-sponsored theatre which promotes traditional entertainments.

سامر *saamir[2]* /vt/ to spend the evening with (s.o.) in pleasant conversation. - vn *musamra, misamra*; ava *misaamir*.

مسامرة *musamra, misamra* /n pl -*aat*/ evening spent in conversation with friends.

مسامر *misaamir* /n */ a participant in a *musamra*.

اتسامر *ʃitsaamir* or *ʃissaamir* /vi/ to spend a pleasant evening chatting (with one's intimates). *ʃadii-na b-nitsaamir niṯaddit fiwayya w-nidḥak fiwayya* here we are, passing the night with a few stories and a few laughs. - ava *mitsaamir*.

س م ر [2]

مسمار *musmaar* /n pl *masamiir, masamiir*/ **1** nail, screw or nail-like device (e.g., fracture-pin, pointed cold chisel). ‖*musmaar raas* tack, drawing-pin. - *musmaar ɛeen* fine-toothed rasp. - *musmaar gadoon* steering-rod (of a bicycle). - *ʃil-ʃakl[i] da musmaar baṭn* ≈ this food sticks to your ribs. - *musmaar-u fiṣ-ṣadr* ≈ he's a drag and always around. - *musmaar guḥa* pretext, excuse to keep one's foot in the door, as in *bi-yquul ʃinn[i] ʃisraʃiil musmaar guḥa l-ʃamriika* he says that Israel is America's excuse for keeping her foot in the door. **2** corn (on the foot). **3** metal strap or clamp. **4** (a single) quilt-stitch. **5** (also *laban musmaar*) colostrum. see further under م س م ر

سمّر *sammar* /vt/ **1** to nail. *sammaru l-loḥeen ɛala baɛḍ* they nailed the two planks together. **2** to quilt-stitch. - vn *tasmiir, tasmiir*; ava/pva *misammar*.

اتسمّر *ʃitsammar* or *ʃissammar* /vi/ **1** to be nailed. **2** to be quilt-stitched. - iva *mitsammar*.

س م ر [3]

سمريّة *sumuriyya* /n/ brownness, darkness (of skin).

أسمر *ʃasmar* /adj, fem *samra*, pl *sumr*/ **1** dark-skinned. ‖*ʃin kunt[a] ɛaayiz titmasxar ʔuum labbis il-ʃasmar ʃaḥmar [prov]* ≈ if you want to mock a man put him in an unsuitable situation. **2** *[euphem]* black.

أسمراني *ʃasmaraani* /adj/ dark-skinned, of dark complexion.

سمار *samaar[2]* /n/ brownness, darkness (of skin).

اسمرّ *ʃismarr* /vi/ to brown, turn brown, tan. - ava *mismirr*.

استسمر *ʃistasmar[1]* /vt/ **1** to consider (excessively) dark or brown. **2** to select for brownness or darkness. - ava *mistasmar*.

س م ر [4]

ثمر *tamar (a, u)* /vi/ to bear fruit (in the form of gratitude). *ʃil-maɛruuf ma-yitmar-ʃ' fii* he shows no gratitude for favours done him. *ɛal-alla yitmar fiik* I hope you appreciate it! - vn *tamaraan*; ava *taamir*.

ثمر *samar*[2] /coll n/ **1** (rare or exotic) fruit(s). **2** product, yield. ‖*samar ir-rooḥ [Chr]* the fruit of the Spirit.

ثمرة *samara* /n pl *-aat*/ **1** /unit n/ a fruit. *ʃagarit il-qiʃta bi-tgiib ḥawaali ɛaʃar samaraat fis-sana* the custard-apple tree yields about ten custard-apples a year. **2** yield, fruit. *ʃeeh samarit it-taɛab da kull-u* what is there to show for all that effort?

ثمّر *tammar*[2] /vi/ *[rur]* to produce seeds or fruit (of plants and trees). - vn *tatmiir*; ava *mitammar*.

استثمر *ʃistasmar*[2] /vt/ to invest (especially money). - vn *ʃistismaar*; ava *mustasmir*; pva *mustasmar*.

استثمار *ʃistismaar* /n pl *-aat*/ investment. ‖*ʃihaadit istismaar* savings certificate.

مستثمر *mustasmir* /n */ investor.

س م ر [5]

سمّور *sammuur* /n pl *samamiir*/ *[zool]* sable (Martes zibellina). *gild' sammuur* sable skin. *farw' sammuur* sable fur.

س م ر [6] see ص م ر : *samar*[3]

س م س see ش م س : *sams*

س م س ر

سمسار *simsaar* /n pl *samasra, samasra*/ agent. *simsaar burṣa* stockbroker. *simsaar ɛarabiyyaat* car dealer.

سمسر *samsar* **1** /vi/ to act as a broker or middleman. **2** /vt/ to net or gain as a middleman. *samsar miit gineeh fil-ɛamaliyya* he made a hundred pounds on the deal. - vn *samsara*; ava *misamsar*.

س م س م

سمسم *samsim* /vt/ to make delicate, give a delicate shape or form to. - vn *samsama*; ava/pva *misamsim*.

مسمسم *misamsim* /adj */ delicate-featured (of a face).

سمسم *simsim* <cf Copt> /coll n/ sesame (seeds). *ɛeef ʃabu simsim* bread covered with sesame seeds. ‖*musmaar simsim* small nails. - *ʃiftaḥ ya simsim* open Sesame!

سمسمة *simsima* /unit n, pl *-aat*/ a sesame seed. ‖*xalla raqabt-i zayy is-simsima* he made me feel small. - *qadd is-simsima wi-tgiib il-xeel milaggima - kilma* (riddle:) the size of a sesame seed and (yet) it can bring the horses all bridled; (answer:) a word.

سمسميّة *simsimiyya* /n pl *-aat*/ **1** sweets or pastries with sesame seeds. **2** stringed musical instrument, particular to the Suez Canal region (see Pl.J, 4).

اتسمسم *ʃitsamsim* or *ʃissamsim* /vi/ to be made delicate, be delicately formed. - iva *mitsamsim*.

س م ط [1]

سمط *samaṭ (u)* /vt/ **1** to scald (e.g., poultry to remove feathers, or tripe, tongue etc. to remove skin). **2** *[rur]* to heat to a high temperature (in order to sterilize). *bi-yusmuṭu l-mataarid fil-furn' qabl' ma yṣubbu l-laban fiiha* they sterilize the crocks in the oven before pouring the milk into them. - vn *samṭ, samaṭaan*; ava *saamiṭ*; pva *masmuuṭ*.

مسمط *masmaṭ* /n pl *masaamiṭ*/ shop or restaurant specializing in brain, tongue, trotters and other variety meats or offal.

اتسمط *ʃitsamaṭ* or *ʃissamaṭ* /vi/ passive of *samaṭ*. - iva *mitsimiṭ*.

سمّط *sammaṭ* = *samaṭ*. - vn *tasmiiṭ*; ava *misammaṭ*.

اتسمّط *ʃitsammaṭ* or *ʃissammaṭ* = *ʃitsamaṭ*. - iva *mitsammaṭ*.

س م ط [2] see س م ى ط : *simiiṭ, simiiṭa*

س م ع

سمع *simiɛ (a)* /vi/ **1** to hear, be able to hear. *ʃaṭraf ma-b-yismaɛ-ʃ* he's deaf - he can't hear. **2** to receive information, receive news. *ma-simiɛt'-ʃ ɛannu ʃabadan* I've never heard of him. *ma-smiɛtuu-ʃ ɛan taḥṣiin il-bahaayim* haven't you heard of immunizing cattle? **3** to listen, be attentive. *lamma ʃakallim-ak tismaɛ* when I talk to you, you listen. ‖*yismaɛ minnak rabb-i-na* may God answer your prayer! - *ʃismaɛ min hina w-fawwit min hina* let it in one ear and out the other. — /vt/ **4** to hear. *simiɛt ig-garas bi-yiqrab* I heard the bell ring. ‖*wi-min simiɛ* same here, as in *ʃana gaɛaan moot - wi-min simiɛ(-ak)* 'I'm starving!' 'Me too!' - *ʃismaɛ simiɛt ir-raɛd' f-widaan-ak [abus]* damn it! pay attention, will you! **5** to listen to. *b-aḥibb asmaɛ ir-radyu* I like to listen to the radio. ‖*simiɛ kalaam-u* (1) he paid attention to what he said. (2) he obeyed him, he heeded his words. - *kilmit-u masmuuɛa* his word carries weight. - vn *samaɛ, samaaɛ, samaɛaan*; ava *saamiɛ*; pva *masmuuɛ*.

مسموع *masmuuɛ* /adj/ audible.

سمع *samɛ, samaɛ* /n/ hearing, sense of hearing. *samɛ-i ṭqiiil fiwayya* I'm a bit hard of hearing. ‖*taḥt' samɛ'*

w-baṣar il-buliiṣ under the very noses of the police. - *ʃis-samɛ' wiṭ-ṭaaɛa* or *samɛan wa-ṭaaɛa* I hear and obey! at your service! *samaɛ huss* hush!

سمعة *sumɛa* /n/ **1** reputation. *sabaq-u suuʃ sumɛit-u* his bad reputation went before him. **2** nickname for the given name Ismail.

سماعى *samaaɛi* **1** /adj/ aural. - /adverbially/ *bi-tiɛzif samaaɛi* do you play by ear? **2** /n/ *[mus]* **2a** vocal or instrumental piece consisting of three sections, each followed by a refrain, and a final section in a different rhythm, followed by the same refrain. **2b** *(samaaɛi tqiil* and *samaaɛi ṭaayir)* specific rhythmic beats.

سميع *samiiɛ* /n/ All-hearing One (epithet of God).

سمّاعة *sammaaɛa* /n pl *-aat/* **1** loudspeaker. **2** telephone receiver. **3** earphone. **4** stethoscope.

سمّيع *sammiiɛ* /n pl *sammiiɛa*/ connoisseur (of music).

مسمع *masmaɛ* /n pl *masaamiɛ*/ **1** range of hearing, earshot. *ɛala masamiɛ-hum* or *ɛala masmaɛ minhum* within earshot of them. **2** *[mus]* passage.

اتسمع *ʃitsamaɛ* or *ʃissamaɛ* /vi/ passive of *simiɛ*. - iva *mitsimiɛ*.

انسمع *ʃinsamaɛ* = *ʃitsamaɛ*. - iva *minsimiɛ*.

سمّع *sammaɛ* /vt/ **1** to cause to hear. *b-asammaɛ-u l-ḥaqiiqa* I make him listen to the truth. *bi-tzaɛɛaq kida leeh da-nta bi-tsammaɛ ʃaaxir if-faariɛ* why are you shouting like that - they can hear you at the other end of the street! **2a** to recite (e.g., a lesson). *sammaɛ ɛala f-feex* recite to the sheikh (so he can correct your mistakes). **2b** to listen to the recitation of (e.g., a lesson). *sammaɛt-i-lu d-dars* I listened to him reciting the lesson. — /vi/ **3a** to echo, reverberate. *ʃiṣ-ṣoot bi-ysammaɛ fil-ḥammaam* sound echoes in the bathroom. **3b** to radiate, be felt (of pain). *ʃil-wagaɛ illi f-baṭn-i bada ysammaɛ fi-ḍahr-i* the pain in my stomach began to be felt in my back. *wagaɛ misammaɛ* referred pain, synalgia. *wik-kuḫḫa lamma ʃakuḫḫ' tasammaɛ fi-maṣariin-i* when I cough I feel it in my guts. - vn *tasmiiɛ*; ava/pva *misammaɛ*.

اتسمّع *ʃitsammaɛ* or *ʃissammaɛ* /vi/ passive of *sammaɛ*. - iva *mitsammaɛ*.

استمع *ʃistamaɛ* /vi/ to listen. *ʃis-saaɛa talaata ḥa-nistimiɛ li-xṭaab ir-raʃiis* we shall listen to the President's speech at three o'clock. *ʃiza kaan illi b-yitkallim magnuun yikuun il-mistimiɛ ɛaaqil [prov]* even with a fool speaking one should listen wisely. - vn *ʃistimaaɛ*; ava *mistimiɛ, mustamiɛ*ˆ.

استماع *ʃistimaaɛ* /n/ auditioning. *lagnit istimaaɛ* audition board (for radio and television).

مستمع *mustamiɛ* /n */ listener. *ḥaḍaraat il-mustamiɛiin il-kiraam* dear listeners!

س م غ

صمغ *samɣ* or *ṣamɣ* /n/ **1a** gum, resin. ‖*nidwiyyit samɣ* type of gummy blight. **1b** gum arabic. **2a** mucilage. **2b** glue.

صمغى *samɣi* or *ṣamɣi* /adj/ gummiferous.

صمّغ *sammaɣ* or *ṣammaɣ* /vt/ **1** to stick with gum, glue. *laazim yisammaɣu ṭ-ṭuruud wi-yixtimuu-ha qabl it-tasliim* they must gum and seal the packages before delivery. **2** to size (cloth, paper etc.) with gum arabic. *yisammaɣ-u l-ḥariir baɛd it-taghiiz* they size the silk after the dressing. **3** to cause gumming in. *fii nooɛ min il-ʃamraaq bi-ysammaɣ il-quṭn* there's a kind of disease which gums up the cotton (bolls). — /vi/ **4** to contract gummy blight (of a plant). *ʃil-quṭn' sammaɣ* the cotton has become infected with gummy blight. - vn *tasmiiɣ*; ava/pva *misammaɣ*.

تصميغة *tasmiiɣa* /n/ type of gummy blight.

اتصمّغ *ʃitsammaɣ, ʃiṭṣammaɣ* or *ʃissamaɣ, ʃiṣṣammaɣ* /vi/ passive of *sammaɣ*. - iva *mitsammaɣ*.

تصمّغ *tasammuɣ, taṣammuɣ* /n/ type of gummy blight.

س م ق

سمّاق *simmaaq* /n/ *[bot]* sumac (Rhus coriaria).

س م ك [1]

سمك *samak* /coll n, pl *ʃasmaak*/ fish. ‖*samak laban tamr' hindi* incongruous mixture. - *samak fi-mayya* (as slippery as) a fish in water, as in *ʃil-mawḍuuɛ da samak fi-mayya* that matter is hard to grasp. - *zayy is-samak (yaakul baɛḍ-u)* ≈ bloodthirsty (especially of relatives). - *qaalu s-samak bi-yṭallaɛ naar - qaal kaanit il-mayya tiṭfii [prov]* (They said 'The fish spouts fire'. He said 'The water would extinguish it'.) ≈ question the logic of everything you hear.

سمكة *samaka* /unit n, pl *-aat/* **1** a fish. ‖*qaṭṭaɛ is-samaka w-del-ha* (he's cut the fish and its tail) ≈ he is worldly and experienced. **2** gusset.

سمكاية *samakaaya* = *samaka*.

سمّاك *sammaak* /n * and pl *sammaaka*/ fishmonger.

س م ك [2]

سمك *sumk* /n/ thickness.

سميك *samiik* /adj/ thick.

أسمك *ʃasmak* /el/ more/most thick.

س م ك ر

سمكر، سنكر *samkar* (also *sankar*) /vt/ to do metalwork on. *ʃil-ɛarabiyya ɛayza samkara* the car needs bodywork. - vn *samkara*; ava/pva *misamkar*.

سمكرى، سنكرى *samkari* (also *sankari*) <P *sîm-gar*>

/n pl *-yya/* metal-worker, panel beater. ‖*samkari mawasiir* pipe maker.

س م ل ل
سملّة *similla* <Fr *semelle*> /n pl *-aat/ [constr]* groundsill.

[1] س م م
سمّ *samm*[1] *(i)* /vt/ to poison. -vn *samm, samamaan*; ava *saamim*; pva *masmuum*.
سامّ *saamm*↑ /adj */ **1** poisonous. *yazaat saamma* poison gasses. **2** venomous.
مسموم *masmuum* /adj */ poisoned, containing poison. ‖*kul - ʃinta masmuum* eat up; are you sickening for something?
سمّيّة *summiyya* /n/ poisonousness.
سمّيّات *summiyyaat* /pl n/ poisonous substances.
سمّ *simm, summ, samm*[2] /n pl *simuum, sumuum*/ **1** poison. ‖*simm' faar [bot]* ratsbane. *-ʈabbaax is-simm' laa budd' yduuq-u [prov]* (the cook of poison will taste it) ≈ one is bound to have a share of what one produces. *-damm-u zayy is-simm* ≈ he's a bore. **2** *[women and children]* something or someone unpleasant. *-da simm* that (or he) is horrid! ‖*ya simm (ʕala)* ≈ how horrid (of), how beastly (of), as in *ya simm*[a] *ʕaleeku - laazim tiʕmilu kida* you beasts, do you have to do that?
سمّاوى *simmaawi* /n * and pl *-yya*/ **1** poisoner. **2** stray-dog catcher.
سموم *samuum* /n/ simoom.
اتسمّ *ʃitsamm* or *ʃissamm* /vi/ to be poisoned. -iva *mitsamm*.
انسمّ *ʃinsamm = ʃitsamm*. ‖*ʕumr-u ma-nsamm' f-badan-u w-iftaval bi-zimma [iron]* (the poison of honest work has never entered his body) ≈ he hasn't done an honest day's work in his life. -iva *minsamm*.
سمّم *sammim* /vt/ to poison. *bi-tḥuṭṭii-li ʃeeh fiṭ-ʈabiix - tisammimii-ni* what are you putting in the food? you're poisoning me! -vn *tasmiim*; ava/pva *misammim*.
اتسمّم *ʃitsammim* or *ʃissammim* /vi/ to be poisoned. ‖*ʃiddii-lu yitsammim [abus]* ≈ let him choke on it! -iva *mitsammim*.
تسمّم *tasammum* /n/ poisoning.
مسمّم *musimm* /adj */ **1** poisonous. **2** venomous.

[2] س م م
مسامّ *masaamm*↑ /coll n, pl *-aat*/ pores.
مسامّيّة *masammiyya*↑ /n/ porosity.

[3] س م م
ثمّ *summa*↑ /conj/ **1** then. *fi-ʃawwil iṭ-ʈabuur il-ʃaṭfaal summa l-ʃummahaat* first in the line are the children, then the mothers. **2** furthermore, moreover. *summa ʃinnak laazim tiigi li-waḥd-ak* what's more, you must come alone.

[1] س م ن
سمن *simin (a)* /vi/ to grow fat, put on weight. -vn *simna, samaana*; ava *samnaan*.
سمن *samn* (also *samn' baladi*) /n/ clarified butter, ghee. ‖*samn' ṣnaaʕi* or *samn' hulandi* cooking fat made of a mixture of vegetable or animal and vegetable fats. *-samn' nabaati* preparation of vegetable fats for cooking. *- ʃis-samn*[a] *ʕala l-ʕasal* (as complementary as) butter and honey, as in *ʃiṣṭalaḥu w-rigʕu zayy is-samn*[a] *ʕal-ʕasal* they made up and were once again like two lovebirds.
سمنى *samni* /adj invar/ cream coloured.
سمنة *samna = samn*.
سمانى *samaani: balaḥ samaani* variety of large round orange-coloured date.
سمين *simiin* /adj/ **1** fat, fatty. ‖*muxx-u smiin* he's stupid. **2** /pl *sumaan*/ (also *simiin malyaan*) fat, overweight, obese. ‖*raagil simiin* (1) a fat man. (2) a rich man. (3) a good catch (for marriage). — /n/ **3** fat. *bi-naakul il-laḥma l-ḥamra bass - ma-b-naakul-ʃ is-simiin* we eat only the lean meat, not the fat.
أسمن *ʃasman* /el/ more/most fat, obese etc.
سمّانة *sammaana*[1] /n/: *sammaanit ir-rigl* the calf of the leg. *sammaanit d-diraaʕ* the biceps.
سمّن *sammin* **1** /vt/ to fatten. *maḥaṭṭit tasmiin* calf-fattening station. **2** /vi/ to become fatty or greasy (of food). -vn *tasmiin*; ava *misammin*.
اتسمّن *ʃitsammin* or *ʃissammin* /vi/ to be fattened. -iva *mitsammin*.
استسمن *ʃistasmin* /vt/ **1** to consider (excessively) fat. **2** to select as (sufficiently) fat. -vn *ʃistismaan*; ava *mistasmin*.

[2] س م ن
سمّان *simmaan, sammaan* /coll n/ quail.
سمّانة *simmaana, sammaana*[2] <cf Copt> /unit n, pl *-aat*/ a quail.

[3] س م ن see [1] ت م ن : *samiin*

س م و
سما، سماء *sama* /n pl *samawaat*/ sky, heaven. ‖*ḥaaṭiṭ manaxiir-u fis-sama* he has his nose in the air, he is stuck-up. *-li-rabb is-sama* spectacular, as in *ʕawwimu xnaaʕa l-rabb is-sama* they started a fight to end all

fights! - *ʃaadi s-sama w-ʃaadi l-ʃarḍ* (here is the sky and here is the earth) ≈ I have nothing.
سماوى *samaawi* /adj/ **1** sky-blue. **2** open to the sky. *manwar samaawi* open-sky light well. **3** *[Chr]* heavenly.
سموّ *sumuww↑, simuww, simiww* /n/ loftiness, exaltedness. *simmuww il-ʃaxlaaq* nobility of character. ‖*ṣaaḥib is-simuww il-malaki* His Royal Highness.
سامى *saami* /adj/ high, exalted, lofty, sublime. *ʃaxlaaq-ha samya* she has a noble character. ‖ *ʃamr[i] saami* royal decree. - *ʃil-manduub is-saami* the High Commissioner.
أسمى *ʔasmaʃ↑* /el/ more/most high, exalted etc.

س م ي see also ء س م
سمّى *samiyy↑* /n/ namesake.
سمّى *samma* **1** /vt/ to name, call (s.o. or s.th.) by a name. *fil-balad bi-ysammuu-ni ḥasan* at home in the village they call me Hasan. *di bi-ysammuu-ha ʃagaazit waḍɛ* they call this 'maternity leave'. **2** /vi/ to pronounce the formula *bi-sm illaah ir-raḥmaan ir-raḥiim*. ‖*ma-fii-ʃ ḥadd[i] samma ɛaleek* no one gave you a helping hand. -vn *tasmiyya, tasmiya↑*; ava/pva *misammi*; pva *musamma*.
مسمّى *musamma* /pva/ named. ‖ *ʃism[a] ɛala musamma* an apt name which fits its bearer. - *ʃila ʃagal musamma* for a certain period. - *ʃila ʃagal ɣeer musamma* until further notice, *sine die*.
اتسمّى *ʃitsamma* or *ʃissamma* /vi/ to be called, be named. ‖ *ʃilli ma-yitsammaa-ʃ* insulting form of reference, in which mention of the name of the person referred to is deliberately avoided ≈ who had better remain nameless. - *ʃilli ma-yitsammuu-ʃ [women in trad soc]* superstitious form of reference to spirits ≈ those who are not to be named. - iva *mitsammi*.

س م ى ط
سميط *simiiṭ* <cf Copt> **1** /coll n/ sticks or rings of bread, often sprinkled with sesame seeds, eaten either fresh or dried. **2** /n/ (also *diqiiq is-simiiṭ*) semolina.
سميطة *simiiṭa* /unit n, pl *-aat*/ a piece of *simiiṭ*.

س ن see also [2] س ن ن and [1] س ن و
سنة *sana* /n pl *siniin, sanawaat*/ year. *baɛd[i] ʃarbaɛ siniin* after four years. *ɛandu kaam sana* how old is he? *ɛandu sanateen* he is two years old. *sanat ʃalf[i] w-tusɛumiyya tisɛa w-sabɛiin* (in) the year 1979. *ʃuxt-i s-sanaa-di ɛazmaa-ni ɛandaha* my sister has invited me to her place this year. ‖*quṭɛit il-ʃutubisaat wi-sniin il-ʃutubisaat* ≈ damn all buses! - *ya sana sooda [women]* ≈ oh woe! - *kull[i] sana wi-nta ṭayyib* conventional greeting at celebration of annually occurring feasts ≈ many happy returns! happy Christmas! etc. - *ɛuqbaal miit sana* conventional birthday greeting ≈ may you live to be a hundred! - *qabl il-hana b-sana* too early.
مسانيّة *misaniyya* /n pl *-aat*/ yearly payment in kind made to village tradesmen for services rendered.

[1] س ن ء see [1] ت ن ى: *ʃasnaaʃ, ʃistisnaaʃ, ʃistisnaaʃi*

[2] س ن ء see [2] ت ن ى: *sunaaʃi*

س ن ب س ك
سنبوسكة *sambuska* (also *sambuksa*) <P *sanbûsak*> /n/ **1** triangular shape. *fuuṭit sufra mṭabbaqa sambuska* a napkin folded to form a triangle. **2** type of sweet pastry formed in triangles. — /pl *-aat*/ **3** anything of triangular or rhomboid shape.

س ن ب ك
سنبك، سمبك *sumbuk* /n pl *sanaabik/ [mech]* round punch, (farrier's) pritchel, drift-pin.

س ن ب س ك see س ن ب ك س: *sambuksa*

[1] س ن ب ل
سنبل *sambil* /vt/ to put forth ears (of wheat, barley etc.). - vn *sambala*; ava *misambil*.
سنبل، سمبل *simbil* /coll n/ **1** heads, ears (of wheat or barley). **2** male inflorescences (of maize).
سنبلة، سمبلة *simbila* /unit n, pl *-aat, sanaabil/* a head, an ear (of wheat or barley), a male inflorescence (of maize). ‖*lamba b-simbila* a small open-flame tin oil-lamp used in rural areas (see Pl.B, 2).
السنبلة *ʃis-sumbula, ʃis-simbila* /n/ *[astrol]* Virgo.
سنبليّة *simbiliyya* = *simbila*.

[2] س ن ب ل
سنبلة *sumbula* /n/ *[mus]* name given to the note E flat (on the third space of the staff).

س ن ت ر see [1] س ن ط ر: *santar, sintar*

(س ن ت ر -)
سنترال *sintiraal* <Fr *centrale*> /n pl *-aat*/ telephone exchange.
سنترفيش *santarafiiʃ* <Fr *centrifuge*>: *sukkar santarafiiʃ* granulated sugar.

س ن ت م –
سنتيمتر *santimitr* <Fr> /n pl *-aat*/ centimetre. - also *santi*.

س ن ت و ل see س ن ت و ن : *sana'ool*

س ن ت و ن
سنتون *sanitoon* (also *sanatool*) /n/ matt paint (for walls).

س ن ت ى
سنتى *santi* <Fr *centimètre*> /n/ centimetre. - also *santimitr*.

س ن ت ى ر
سنتير *sinteer, santiir* (also *ramy is-sinteer*) <Fr *ceinture*> /n/ body hold and throw (in wrestling).

س ن ت ى ن
سنتينة *santiina* <It *sentina*> /n/ bilge, bilge water. - also *sartiina*.

س ن ت ى –
سنتيال *sintiyaal, suntiyaal* = *sintiyaan*.
سنتيان *sintiyaan, suntiyaan* <Fr *soutien*> /n pl *-aat*/ brassiere. - also *sutyaan*.

(س ن ج)
سنجة *singa*[1] <T *süngü*> /n/ bayonet, ‖*ɛaṣaaya fiiha singa* sword-cane, sword-stick.
سنجة *singa*[2] /n pl *sinag*/ **1** weight (of a balance scale). ‖*ɛala singit ɛafara* (dressed) to the nines. **2** contact pole, arm (of a trolley-bus or the like).

س ن ج ا ب
سنجاب *singaab* <P *sinjâb*> /n pl *sanagiib*/ squirrel.
سنجابى *singaabi* /adj/ ash-coloured.

س ن ج ق
سنجق *sangaq* <T *sancak*>: *sangaq labanda [naut]* hard a-starboard!

س ن ح
سنح *sanaḥ (a)* /vi/ to offer itself, present itself (of, e.g., a thought, an opportunity). - vn *sunuuḥ, sinuuḥ, sanaḥaan*; ava *saaniḥ*.
سنّح *sannaḥ* /vi/ to pretend not to hear, feign inattention. - vn *tasniiḥ*; ava *misannaḥ*.

س ن د [1]
سند *sanad*[1] *(i)* /vt/ to support. *ḥizaam saanid liq-ḍahr* back-supporter. *lamma yuqaɛ yilaaqi lli yisnid-u* when he's in trouble he'll find people to support him. ‖*masnuud ɛala ḥeeṭa mayla* (leaning on a leaning wall) ≈ depending on shaky support. - *kul ḥaaga tisnid-ak* eat something to keep you going. - vn *sand, sanadaan*; ava *saanid*; pva *masnuud*.
سند *sand* /n/ support. ‖*kutla sand [naut]* cross-pawl, timber support attached to the upper parts of the wooden frame of a boat (to keep the ribs properly spaced until the deck beams are in place).
سندة *sanda* /n pl *-aat, sanaayid*/ **1** brace, support. **2** dolly block. *sanda rigl* L-shaped dolly block. *sanda fufeer* flat dolly block.
سند *sanad*[2] /n/ **1** /pl *ʔasaniid*/ *[leg]* **1a** item of evidence. **1b** basis of a legal argument. **1c** legal document. **2** /pl *-aat*/ government savings bond (of fixed value and with regular dividends). **3** /no pl/ support, help. ‖*ya sanad-i* epithet a woman gives her husband when mourning him.
سنادة *sinaada* /n pl *-aat*/ support, supporting strut.
سنّادة *sannaada* = *sanda*.
سنيد *sanniid* /n pl *sanniida*/ accompanist (to a dancer or a singer).
مسند *masnad* /n pl *masaanid*/ any of various objects functioning as a support. *masnad saabit [arch]* fixed bearing. *masnad raas* head rest. *masnad kursi* chair back. *masaanid kanaba* back cushions of a traditional sofa. *masnad sarg* cantle of a saddle.
اتسند *ʔitsanad* or *ʔissanad* /vi/ to lean. *duxt' wi-ssanadt*[a] *ɛala l-ḥeeṭa* I got dizzy and leaned against the wall. *taɛaali ssindi ɛala kitf-i* come, lean on my shoulder. - ava *mitsinid*.
انسند *ʔinsanad* = *ʔitsanad*. - ava *minsinid*.
سنّد *sannid* /vt/ to support, give support to. - vn *tasniid*; ava *misannid*.
اتسنّد *ʔitsannid* or *ʔissannid* /vi/ to support oneself, lean. *maaʃi yitsannid ɛal-ḥeeṭaan* he is walking along holding onto the walls. - ava *mitsannid*.
مستند *mustanad* /n pl *-aat*/ **1** document. **2** documented proof.
مستندى *mustanadi* /adj/ pertaining to records. *daftar mustanadi* record book of documents.

س ن د [2]
السند *ʔis-sind* /prop n/ Sind (province in modern Pakistan). ‖*laffeet is-sind' wil-hind* ≈ I went and looked everywhere.

س ن د [3] see س ن د ا ن : *sindaan*

س ن د ا ل
سندال *sindaal* /n pl *sanadiil*/ anvil. - also *sindaan*.

س ن د ا ن
سندان *sindaan* /n pl *sanadiin*/ anvil. - also *sindaal*.

س ن د ر
سندرة *sandara* /n pl *sanaadir*/ storage loft.

س ن د س
سندس *sundus* /n/ silk brocade.

س ن د ق
صندوق *sanduuq, sunduuq* /n pl *sanadiiq*/ **1** box, container. *sanduuq busṭa* mail-box. ‖ *sanduuq gamɛ [print]* composing frame. *sanduuq id-dunya* a type of peep-show. **2** *[gym]* vaulting box, box horse. **3** fund, kitty.

س ن د ل see س ن د ا ل : *sindaal*

س ن د ن see س ن د ا ن : *sindaan*

س ن د و ـ
سندوتش *sandawitʃ* <Engl> /n pl *-aat*/ sandwich.

س ن د ى ك
سنديك *sandiik* <Fr *syndic*> /n pl *sanaadik*/ creditor's representative appointed by the court (in bankruptcy cases).

س ن د ى ـ
سنديان *sindiyaan* <P *sindiyân*> /coll n/ holm oak(s).
سنديانة *sindiyaana* /unit n, pl *-aat*/ a holm oak.

س ن ر ى ـ
سيناريست *sinaṙist* <Fr> /n pl *-aat*/ scenarist.

س ن س
سنس *sins* <prob It *senza*> /adv/ *[joc]* **1** without paying. *daxal is-siima sins* he entered the cinema without paying. **2** gratis.

س ن س ف ـ
سنسفيل *sansafiil* /n/: *yilɛan sansafiil-ak [abus]* ≈ curse your whole family tree! - also *salsafiil*.

س ن س ن
سنسن *sinsin* /n/ **1** minute liquorice beads (used as a breath freshener). **2** nickname for Hasan and Muhsin.

س ن ط
سنط *sanṭ* /coll n/ **1** sant tree (Acacia nilotica). **2** ribs (of a boat's hull).
سنطة *sanṭa* <Copt> /unit n, pl *-aat*/ **1** a sant tree. **2** a rib (of a boat's hull). **3** wart.
سنطاية *sanṭaaya* /unit n, pl *-aat*/ **1** a sant tree. **2** wart.

س ن ط ر [1]
سنطر *sanṭar*[1] (also *santar, ṣanṭar*) <Engl> /vt/ *[soccer]* to centre (the ball) for kick-off. - vn *sanṭara*; ava *misanṭar*.
سنطر *sinṭar* (also *sintar, ṣinṭar*) /n/ *[soccer]* **1** centre, centre spot. **2** /pl *sanaatir*/ centre half.
اتسنطر *ʔitsanṭar*[1] or *ʔissanṭar*[1] /vi/ passive of *sanṭar*[1]. - iva *mitsanṭar*.

س ن ط ر [2]
سنطر *sanṭar*[2] /vi/ to collapse heavily. *sakaɛt-u buks*[i] *wiqiɛ misanṭar* I punched him and he went down like a sack of cement. - vn *sanṭara*; ava *misanṭar*.
اتسنطر *ʔitsanṭar*[2] or *ʔissanṭar*[2] = *sanṭar*[2]. - ava *mitsanṭar*.

س ن ف و ر
سيمافور *sanafoor* <Engl> /n pl *-aat*/ **1** semaphore, (railway) signal. **2** epithet for a tall person.

س ن ك ح
سنكح *sankaḥ* /vi/ to loaf about, drift about. - vn *sankaḥa*; ava *misankaḥ*.
سنكوح *sankuuḥ* /adj pl *sanakiiḥ*/ good-for-nothing. *mara sankuuḥa* tramp, trollop.
اتسنكح *ʔitsankaḥ* or *ʔissankaḥ* = *sankaḥ*. - ava *mitsankaḥ*.

س ن ك ر [1]
سنكر *sankar* /vt/ to lock. - vn *sankara*; ava/pva *misankar*.
اتسنكر *ʔitsankar* or *ʔissankar* /vi/ to be locked. - iva *mitsankar*.

س ن ك ر [2] see س م ك ر : *sankar, sankari*

س ن ك س ـ
سنكسار *siniksaar* <Gr> /n/ *[Chr]* synaxarion.

س ن ك ى
سونكى *sunki* <T *süngü*> /n pl *-yaat, sanaaki*/ bayonet.

س ن م
سنام *sanam* /n pl *-aat, sunúma, siníma*/ camel hump.

سنمة *sanama = sanam.*
سنماية *sanamaaya = sanama.*
سنام *sanaam = sanam.*

س ن م ا
سينما *sinima, sinama* <Fr> /n pl *-yaat, -haat/* **1** cinema, movie-house. **2** *ʃis-sinima* the cinema, the movies, the film-making industry. - also *siima.*
سينمائى *sinimaaʃi* /adj/ pertaining to cinema, cinematographical.

س ن م ك ك
سنمكّة *sanamikka* /coll n/ senna, senna pod(s), senna leaflet(s). - also *salamikka.*

س ن ن [1]
سنّ *sann[1] (i)* /vt/ to hone, sharpen. *mumkin tisinn is-sikkiina* would you sharpen the knife? ‖*sann' snaan-(u)* to get ready for action. - *masnuun ɛal-ʃaaxir* ≈ on-the-ball. - vn *sann, sananaan*; ava *saanin*; pva *masnuun.*
سنّة *sanna* /inst n, pl *-aat/* a sharpening.
سنّ *sinn[1]* /n pl *sinaan, ʃasnaan, sinuun/* **1** tooth, tooth-like projection. *furfit sinaan* tooth-brush. *sinaan il-laban* milk teeth. *duktoor ʃasnaan* dentist. *sinaan il-munfaar* the teeth of the saw. *ʃil-ɛeen bil-ɛeen wis-sinn bis-sinn [prov]* an eye for an eye and a tooth for a tooth. ‖*sinn il-fiil* elephant tusk. - *xad deel-u fi-snaan-u w-ɫaar* he took to his heels. **2** (sharp) point, tip, nib. *sinn' ɋalam* point of a pencil, nib of a pen. *sinn' gazma* toe of a shoe. ‖*sinn' naml id-dibbaana* bead of the rifle sight. - *ɛala sinn' w-rumḫ* ≈ known to one and all, as in *ʃana zakiyya bint il-ḫagg[a] ɛali l-fakahaani ɛala sinn' w-rumḫ* I'm Zakiyya, the daughter of Hagg Ali, the fruit-seller, known to one and all. **3** sharp edge. *sinn is-sikkiina* cutting edge of the blade. ‖*sinn il-ɋalawooz* screw-thread. **4** *[butcher]* front rib chop. **5** a point in tent appliqué designs (see Pl.H, 3).
سنّة *sinna* /n pl *-aat/* **1** tooth. ‖ *ʃabu sinna* nickname for a man with a gold tooth. **2** a little bit. *sinna min gooz iɫ-ɫiib* a pinch of nutmeg. *ʃimʃi sinna l-ɋuddaam* move forward just a bit. *sinna sinna* bit by bit. ‖*sinnit ʃafyuun* bit of opium for sucking.
سنّان *sannaan* /n pl *sannaana, sannaniin/* one who sharpens blades, knife-grinder.
مسنّ *misann* /n/ whetstone, grindstone, sharpening iron. ‖ *ʃalḫas misann-i w-ʃabaat mihanni [prov]* ≈ I'll be poor but happy.
اتسنّ *ʃitsann[1]* or *ʃissann[2]* /vi/ to be honed, be sharpened. - iva *mitsann.*

سنّن *sannin[1]* **1** /vi/ to teethe. **2** /vt/ to make teeth or serrations in, indent. - vn *tasniin*; ava *misannin.*
مسنّن *misannin* /adj/ toothed, serrated.
اتسنّن *ʃitsannin[1]* or *ʃissannin[1]* /vi/ passive of *sannin* 2. - iva *mitsannin.*

[2] س ن ن see also س ن
سنّ *sinn[2]* /n pl *ʃasnaan/* age. *sinn ir-ruʃd* legal age. *sinn-u kaam* how old is he? *ʃana ya doob sinn-i sitta w-ɛiʃriin sana* I'm barely twenty-six years old. *kibiir fis-sinn* elderly. *ɫaaɛin fis-sinn* advanced in years. *sinn-u ṣugayyar* he's a young man.
أسنّ *ʃasann* /el/ more/most advanced in years.
سنّن *sannin[2]* /vt/ to estimate the age of. - vn *tasniin*; ava/pva *misannin.*
اتسنّن *ʃitsannin[2]* or *ʃissannin[2]* /vi/ passive of *sannin[2].* - iva *mitsannin.*
مسنّ *musinn* /adj */ old, aged, advanced in years.

[3] س ن ن
سنّ *sann[2] (i)* /vt/ to launch, initiate (practices, laws etc.). *ʃinta lli sanneet sunna mhabbiba fif-firka* you're the one who started an outrageous practice in the company. - vn *sann*; ava *saanin*; pva *masnuun.*
سنّة *sunna* /n pl *sunan/* **1** custom or usage sanctioned by tradition. ‖*ɛala sunnit illaah (wi-rasuul-u) [Isl]* legally, as in *ʃiggawwizna ɛala sunnit illaah* we were legally married. **2** *ʃis-sunna [Isl]* the Sunna of the Prophet Muhammad. *ʃahl is-sunna* Sunni Muslims.
سنّى *sunni* /adj */ **1** Sunni, pertaining to the Sunna of the Prophet. **2** bearded. *raagil sunni* a man with a beard. — /n * and pl *-yya/* **3** a Sunni, Sunnite. ‖*ɛaamil sunni* he pretends to be a pious man.
اتسنّ *ʃitsann[2]* or *ʃissann[2]* /vi/ to be launched, be initiated. - iva *mitsann.*
استنّ *ʃistann* /vt/ to launch, initiate. - ava *mistann.*

[4] س ن ن
سنّ *sinn[3]* /n/ bran. *ɛeef is-sinn* bran bread (prescribed for diabetics).

س ن ن ا ر see ص ن ن ا ر : *sinnaara*

س ن ن و
سنّو *sinnu* <Copt> /n/ style of serving in the game of *xara* (q.v.).

[1] س ن و see also س ن
سنوى *sanawi[2]* /adj */ annual. *taɋariir sanawiyya* annual reports.

سنويّة *sanawiyya* /n pl *-aat*/ anniversary.

س ن و [2] see ت ن ى [2] : *sanawi[1], ʕis-sanawiyya*

س ن ى [1] see ت ن ى [1] : *ʕasnaaʕ, ʕasna, ʕistasna, ʕistisnaaʕ, ʕistisnaaʕi*

س ن ى [2] see ت ن ى [2] : *saaniyan, sanya, sunaaʕi*

س ن ى [3] see س ن : *misaniyya*

س ن ى و ر
سنيورة *sanyuura: bint[i] (zayy is-) sanyuura [rur]* pretty young girl.

(س ه)
ثاء *sih[1]* /fem n, pl *-aat*/ fourth letter of the Arabic alphabet. - also *saaʕ*.
سيه *sih[2]* <P *sih*> /n pl *-aat*/ three (in dice etc).

س ه ت ن
سهتنة *sahtana* /vn/ shiftiness, slipperiness.
مسهتن *misahtin* /adj */ shifty, slippery.
اتسهتن *ʕitsahtin* or *ʕissahtin* /vi/ to pretend to be meek. - ava *mitsahtin*.

س ه د
سهد *suhd* /n/ sleeplessness, insomnia (usually of the lovelorn).
سهاد *suhaad* = *suhd*.

س ه ر
سهر *sihir (a)* /vi/ to stay up late. *sihirna nismaɛ ḥaflit is-sitt* we stayed up late to hear Umm Kalthum's concert. *dimaaɣ-i ḥa-titfiliq min kutr is-sahar* my head is splitting from too much staying up late. - vn *sahar*; ava *sahraan, saahir*.
سهرة *sahra* /n pl *-aat*/ **1** evening, soirée. *libs is-sahra* or *badlit is-sahra* formal evening-dress. *ḥittit diin sahra* a great evening. **2** (late) evening event. *ɛandi sahra fil-beet l-lelaa-di* I'm having a few guests over tonight.
ساهر *saahir* **1** /ava */ wakeful, awake, staying up (at night). **2** /adj/ taking place in the evening. *ḥafl[i] saahir* or *ḥafla saahira↑* (1) evening show, soirée. (2) evening party.
سهّارى *sahhaari* /adv/ through the night, late into the night. *bi-yiʃtaɣalu sahhaari* they work through the night. - /adjectivally/ *lamba sahhaari* (1) small oil-lamp. (2) night-light.
سهّاريّة *sahhariyya* /n pl *-aat*/ **1** small oil-lamp left burning in order to save matches. **2** night-light.
سهّير *sahhiir* /n pl *sahhiira*/ **1** a night-owl, night-hawk. ‖*sahhiir il-layaali* one who is love-stricken. **2** Koranic reader employed throughout the month of Ramadan to recite the Koran at night in a private house.
سهّر *sahhar* /vt/ **1** to keep (s.o.) up late. **2** to employ (a Koranic reader) to recite the Koran throughout Ramadan in one's house. - vn *tashiir*; ava/pva *misahhar*.
اتسهّر *ʕitsahhar* or *ʕissahhar* /vi/ to be kept up late. - iva *mitsahhar*.

س ه ر ج
سهرج *sahrag* /vi/ to blaze (of fire). - vn *sahraga, tisahriig*; ava *misahrag*.

س ه ل [1]
سهل *sihil (a)* /vi/ to become easy. - vn *sihuula, suhuula*.
سهل *sahal (i)* /vi/ to contract diarrhoea.
سهولة *suḥuula* /n/ ease, facility. *bi-suhuula* easily.
سهل *sahl* **1** /adj */ easy, convenient. *sahl[i] zayy[i] ʃurb il-mayya* ≈ as easy as pie. **2** /n pl *suhuul*/ **2a** plain, flat tract of land. **2b** field, meadow.
¶ *sahlan: ʕahlan wa-sahlan* see *ʕahlan*.
أسهل *ʕashal* /el/ easier/easiest.
إسهال *ʕishaal* /n/ diarrhoea. ‖ *ʕil-ʕishaal il-ʕabyaḍ* coccidiosis (fowl disease).
ساهل *saahil↓* /adj/ easy, convenient.
اتسهل *ʕitsahal* or *ʕissahal* /vi/ to be afflicted with diarrhoea. - iva *mitsihil*.
انسهل *ʕinsahal* = *ʕitsahal*. - iva *minsihil*.
سهّل *sahhil* /vt/ to make easy, facilitate. *ḥ-aḥaawil ʕasahhil muhimmit-ak* I will try to facilitate your task. ‖*rabb-i-na ysahhil* may our Lord make (things) easy! (said when faced with a problem). - *(ʕallaah) yisahhil-lak* may God make (things) easy for you! - vn *tashiil*; ava/pva *misahhil*.
تسهيل *tashiil* /n pl *-aat, tasahiil*/ facility, facilitation. *fii tashilaat iʕtimaniyya bin-nisba lit-tuggaar* there are credit facilities for merchants. ‖*ḥasab it-tasahiil* depending on circumstances, as in *ḥ-amaʃʃi ḥaal-i maɛaa bi-sgaara bi-fingaal ɋahwa ḥasab it-tasahiil yaɛni* I'll soften him up with a cigarette or a cup of coffee, as appropriate.
مسهّل *musahhil* /n/ **1** Facilitator (epithet of God). *yaa musahhil ya rabb* ≈ make things easy, Lord (said when faced with a problem). **2** /pl *-aat*/ laxative.
اتسهّل *ʕitsahhil* or *ʕissahhil* /vi/ passive of *sahhil*. ‖ *ʕitsahhil li-ḥaal sabiil-ak* ≈ push off! - iva *mitsahhil*.
اتساهل *ʕitsaahil* or *ʕissaahil* /vi/ **1** to behave with lenience, indulgence or tolerance. **2** to behave with negligence or carelessness. - vn *tasaahul*; ava *mitsaahil, mutasaahil↑*.

استسهل ʔistashil **1** /vt/ to consider easy, find easy. *xad if-fuxla lli b-yistashil-ha w-saab is-ṣaʕba* he took the work he finds easy and left what was difficult. **2** to select for easiness. *ʔistashil suʔaal mil-itneen wi-gaawib ʕalee* pick the easier of the two questions and answer it. - vn *ʔistishaal*; ava/pva *mistashil*.

س ه ل ²
السهيل ʔis-suheel /prop n/ *[astron]* Canopus. ‖ *warra(a) s-suheel yiṭlaʕ mineen* to give (s.o.) a hard time.

س ه ل ى –
سهليّة *sihliyya* /coll n/ small salted grey mullet (Mugil seheli). - also *siheeli*.
سهليّاية *sihliyyaaya* /pl *-aat*/ unit noun of *sihliyya*.

س ه م ¹
سهم *sahm*[1] /n/ **1** /pl *sihaam*/ arrow. – /pl *ʔishum, ʔushum, ʔashum, suhúma*↓/ **2** share, stock certificate. **3** land measure equal to 7.293 square metres. **4** drive shaft of a water-wheel (see Pl.E, 10).
ساهم *saahim* /vi/ to share, participate (with one's resources). *ḥa-tsaahim bi-kaam fil-maʃruuʕ il-xayri da* how much will you contribute to this charity project? ‖ *ʃirka msahma* joint-stock company. - vn *musahma*; ava *misaahim*.
مساهم *musaahim* /n */ shareholder, stockholder.
اتساهم ʔitsaahim or ʔissaahim /vi/ **1** (impersonal) passive of *saahim. di mafariiʕ ḥukumiyya ma-b-yitsahim-ʃ' fiiha* these are government projects one can't participate in. **2** to share or participate (mutually). - ava/iva *mitsaahim*.

س ه م ²
سهّم *sahhim* /vi/ to look concerned or preoccupied. - vn *tashiim*; ava *misahhim*.
تسهيمة *tashiima* /inst n, pl *-aat*/ concerned or preoccupied expression.

س ه م ³
سهم *sahm*[2] /n/ *[mus]* name given to the note G on the first space above the staff.

س ه م د
سهمد *sahmid* /vt/ **1** to level, even. *ʔimbaarıḥ ibtadu ysahmidu ʃ-ʃaarıʕ ʕuddaam bet-na* yesterday they began to level the street in front of our house. **2** to settle, clear up. *xallii-hum yisahmidu l-mawḍuuʕ da ʕabl' ma yitʕilib li-xnaaʕa ḥamya* have them settle this matter before it changes into a serious dispute. - vn *sahmada*; ava/pva *misahmid*.

اتسهمد ʔitsahmid or ʔissahmid /vi/ **1** to be levelled. **2** to be settled. - vn *tisahmiid*; iva *mitsahmid*.

س ه و see س ه ى : *sahw, sahwa*

س ه ى
سهى *sihi (a)* /vi/ to become heedless or inattentive. *ʔis-sawwaaʕ sihi ʃwayya w-ḥaṣal ḥadsa* the driver was distracted briefly and there was an accident. *gooz-i sihi ʕala l-ʔakl' w-faaṭ* my husband forgot about the food and it burned. *sihiit ʕan ṣalaat iṣ-ṣubḥ* I forgot to perform the early morning prayer. *sihyu fiṣ-ṣala* they overlooked part of the prayer ritual. ‖ *raaḥ ʕalayya sahw* I had a lapse of memory. - vn *sahayaan, sahw*; ava *sahyaan, saahi*; pva *mashi*.
¶ *suhi ʕala* to slip the mind of, as in *kunt' maʃɣuula waʕt il-maʕaad suhi ʕalayya w-ma-ruḥt'-ʃ* I was busy at the time of the appointment, it slipped my mind, and so I didn't go.
سهوة *sahwa* /inst n/ a lapse of memory. *raaḥit ʕalayya sahwa* I had a lapse of memory. ‖ *ʕala sahwa* by surprise, as in *xad-ni* (or *gaa-li) ʕala sahwa* he took me by surprise, he caught me unawares.
سهيان *sahyaan* /adj */ forgetful, inattentive, absent-minded.
ساهى *saahi* **1** /adj */ = *sahyaan*. **2** /adj pl *sawaahi*/ deceptively innocent-looking, deep (of persons). *taḥt is-sawaahi dawaahi [prov]* ≈ still waters run deep.
أسهى ʔasha /el/ **1** more/most forgetful, absent-minded etc. **2** more/most innocent-looking.
سهّى *sahha* /vt/ **1** to distract, make inattentive. *ʕaʕad yisahhii-ni l-ḥadd' ma l-ʕaṭr' faat* he kept me distracted until I missed the train. **2** to take advantage of the inattention of. *sahhaa-ni w-ḥaṭṭ' f-geeb-i l-maḥfaẓa* he took advantage of my being distracted to put the wallet in my pocket. - vn *tashiyya*; ava *misahhi*.
اتسهّى ʔitsahha or ʔissahha /vi/ passive of *sahha*. - iva *mitsahhi*.
استسهى ʔistasha = *sahha* 2. - ava *mistashi*.

س ه ى ل
سهيلى *siheeli* /coll n/ small salted grey mullet (Mugil seheli). - also *sihliyya*.

س و ا ر ى
سوارى *sawaari* <P *suwârî*> /pl n/ *[mil]* cavalry. ‖ *ʕamuud is-sawaari* Pompey's Pillar (in Alexandria).

س و ا ر س
سوارس *sawaaris* /n/ *[obsol]* horse-drawn bus.

س و ء

ساء *saaʔ*[2] *(u)* /vi/ to deteriorate, go bad. *ʔaḥwaal-i saaʔit* my situation worsened. - vn *sawaʔaan, suuʔ, saww.*

ساء *saaʔ*[3] *(i)* **1** /vt/ to wrong, act wrongly with respect to. *siʔnaa-kum fi-ʔeeh* how have we wronged you? || *ʔallaah la ysiʔ-kum* may God not harm you! (said to a beggar when refusing alms). **2** /vi/ to be harmful. *da bi-ysiiʔ li-hayʔit il-bariid* it is deleterious to the Post Office.

سوء *suuʔ* /n/ badness, bad state. || *suuʔ il-ḥaẓẓ* bad luck. - *suuʔ tafaahum* misunderstanding. - *ɤaali w-suuʔ keel* expensive and underweight.

سوّ *saww* /n/ badness. || *ya saww' baxt-i* oh, the bad luck I have! - *naas saww* bad people. - *ʔuṣbur ɛala gaar is-saww - la-yirḥal la-tgii-lu dahya [prov]* bide your time with an evil neighbour - either he will move away or misfortune will befall him.

سوّة *siwwa* /n pl *-aat, siwaw*/ pudendum.

سيّء *sayyiʔ* /adj */ bad. *sayyiʔ il-ʔaxlaaq* bad-mannered.

سيّئة *sayyiʔa* /n pl *-aat*/ sin, misdeed. || *raaḥ ʔakaffar sayyiʔaat-u* I'll give him a hard time.

أسوأ *ʔaswaʔ* /el/ worse/worst. *da ʔeeh da ya ʔaswaʔ ma xalaq rabb-i-na* what does this mean, you worst of all God's creation!

مساوى *masaawi, masaawiʔ* /pl n/ **1** evil deeds. **2** shortcomings.

اتساء *ʔitsaaʔ* or *ʔissaaʔ* /vi/ passive of *saaʔ*[2]. *ʔitsaaʔ* or *ʔitsaaʔ ʔilee* he was wronged. - iva *mitsaaʔ.*

انساء *ʔinsaaʔ* = *ʔitsaaʔ.* - iva *minsaaʔ.*

سوّأ *sawwaʔ* /vt/ to impair, harm. *dool sawwaʔu sumɛit-na f-kull" ḥitta* they've hurt our good name everywhere. - vn *taswiiʔ*; ava/pva *misawwaʔ.*

اتسوّأ *ʔitsawwaʔ* or *ʔissawwaʔ* /vi/ to be impaired, be harmed. - iva *mitsawwaʔ.*

أساء *ʔasaaʔ*↑ /vi/ to do wrong. *ɛumr-i ma kunt' musiiʔ fi-ḥaqq-ak* I've never done you any wrong. *ʔana ʔasaʔt-ak fi-ḥaaga* have I offended you in any way? - vn *ʔisaaʔa*↑, *ʔasaaʔa*; ava *musiiʔ*↑.

س و ب

ثواب *sawaab* /n/ merit, reward accruing from pious deeds. *bi-yiqru l-xatma wi-yiwhibuu-lu sawaab-ha* they read the Koran through and donate the merit of it to him. || *ʔiksab fiyya sawaab* do me a good turn (and it will earn you a reward in heaven).

مثابة *masaaba: bi-masaabit* on a par with, tantamount to. *ʔit-taharrub miq-qariiba b-masaabit sirqa* tax evasion is just like stealing.

س و ب ر

سوبر *soobar, suubar* <Engl> /adj invar/ super. *sagaayir suubar* king-size cigarettes. *banziin suubar* high-grade petrol.

س و ت ر

سوتر *sootar* /prop n/ name of a quarter in Alexandria.

س و ت ش

سويتس *siwitʃ* <Engl> /n pl *-aat*/ **1** switch. **2** switchboard. **3** switchboard operator.

س و ج

سوجة *sooga* /n/ hashish.

س و ج ر

سوجر *soogar* <perh It *assicurare*> /vt/ **1** to register (mail). *ɣard' msoogar* registered parcel. **2** to guarantee. *fuɤl' msoogar* guaranteed work. **3** to lock up well. *ɋifl' msoogar* (1) a type of strong lock. (2) blockhead, numskull. - vn *misogra*; ava/pva *misoogar, musoogar.*

اتسوجر *ʔitsoogar* or *ʔissoogar* /vi/ passive of *soogar.* - iva *mitsoogar.*

س و ح[1] see also س ى ح

ساح *saaḥ' (u)* /vi/ to tour, travel. - vn *siyaaḥa*; ava *saayiḥ.*

سياحة *siyaaḥa* /n/ tourism. *waziir is-siyaaḥa* Minister for Tourism.

سياحى *siyaaḥi* /adj/ tourist(ic).

سايح *saayiḥ* /n pl *suwwaaḥ, suyyaaḥ*/ tourist.

سوّاح *sawwaaḥ* /n */ itinerant, wanderer.

سوّح *sawwaḥ* /vt/ **1a** to cast, hurl, fling (over a long distance). *sawwaḥt it-ṭuuba min if-fibbaak* I flung the stone out of the window. *sawwaḥ il-fikra di min dimaaɤ-ak* throw this idea out of your head. **1b** (also *sayyaḥ*) to spill out (over a large area). *bi-nubdur il-ɤalla w-nsawwaḥ ɛaleeha l-mayya* we sow the grain and then flood it with water. **2** to put off, postpone. *ma-tsawwaḥ-ʃ il-mawḍuuɛ* don't go on delaying the matter. **3** to ruin, make a mess of. *sawwaḥ id-dinya* he caused a lot of trouble. *ḥ-asawwaḥ-ak* I'll destroy you! — /vi/ **4** to wander aimlessly, drift. *markib misawwaḥa* a drifting boat. - vn *taswiiḥ*; ava/pva *misawwaḥ.*

اتسوّح *ʔitsawwaḥ* or *ʔissawwaḥ* /vi/ passive of *sawwaḥ.* - iva *mitsawwaḥ.*

س و ح[2]

إسوح *ʔiswiḥ* /adj, fem *sooḥa*/ black (euphemistic for *ʔiswid* 2a). - also *ʔiswix.*

س و خ [1]
ساخ *saax (u)* /vi/ **1** to sink. *rigl-i saaxit fir-raml* my foot sank into the sand. **2** to faint. *ʔumt' min ʕak-kursi w-ʃana daayix wi-rooḥ-i sayxa* I got up from the chair dizzy and feeling faint. - vn *sawaxaan*; ava *saayix*.

س و خ [2]
إسوخ *ʃiswix* /adj, fem *sooxa*/ black (euphemistic for *ʃiswid* 2a). - also *ʃiswiḥ*.

س و د [1]
ساد *saad (u)* /vi/ to rule, become dominant. *(ʔumr) il-ḥasuud ma ysuud [prov]* the envious never rule. - vn *siyaada*; ava *saayid*.
سيادة *siyaada* /n/ **1** power, authority. *da ṣaaḥib sulṭa w-siyaada* he's the all-powerful boss. **2** sovereignty. **3** *siyaadit* polite or formal title of, and form of address or reference to, a man or woman ≈ sir, madam. *siyaadit id-duktoor* the Doctor. *miʃ ism' siyadt-ik magda* isn't your name Magda, ma'am?
سيد *siid* /n/ **1** master. *siid il-beet* the master of the house. *siid-ak wi-taag raas-ak* ≈ I'm your lord and master, I'm better than you from every point of view. *ʃin kaan lak ʕand il-kalb[a] ḥaaga ʔul-lu ya siid-i [prov]* if you need something from a dog call him master. **2** respectful form of address or reference to a grandfather. **3** *siid-i* familiar form of address to any man. *xud ya siid-i* take this, my friend. **4** *siid-i* and *sid-na* title accorded to any venerated Muslim religious figure. **5** /in constr, w masc referent/ the best of, the finest. *ʃana siid min yiqrab il-ʕuud* I'm the best lute-player around. *siid il-maʃkulaat* the finest food. — /pl *ʃasyaad*/ **6** demon, spirit.
سيّد *sayyid* /n pl *saada*/ **1** title of, and polite form of address and reference to, a man. *ʃana ṣaddart if-fiik raqam kaza lis-sayyid fulaan* I issued cheque number such-and-such to Mister So-and-so. *ya saada nahar-kum saʕiid* gentlemen, good morning! **2** lord. *sayyid-na* title accorded to a venerated religious figure (e.g., a sheikh, a prophet or (among Christians) a bishop, a patriarch). *ʃis-sayyid (il-masiiḥ)* the Lord Christ. — (also *ʃis-sayyid*) /prop n/ **3** male given name. ‖ *sayyid ʔiʃṭa* hippopotamus.
سيّدة *sayyida* /n pl *-aat*/ **1** title of, and form of address or reference to, a married woman. **2** title of a Muslim female saint. ‖ *ʃis-sayyida* (1) Sayyida Zaynab. (2) name of the quarter in which the mosque of Sayyida Zaynab is located. - *ʃis-sayyidaat* the women saints (specifically, the descendants of the Prophet's daughter Fatima) buried in Cairo.
سيّدى *sayyidi* /adj/ pertaining to Christ.

س و د [2]
أسود *ʃiswid* /adj, fem *sooda*, pl *suud*/ **1** black. *ʔuṭṭa sooda* a black cat. *ʃid-dinya baʔit sooda zayy il-leel* it became as black as night. *ʃis-suud* the black races, negroes. ‖ *ʃabu l-ʃiswid [slang]* opium. - *ʔalb-u ʃiswid* he bears grudges and is unkind. **2a** (also euphemistically, *ʃiswix*, *ʃiswiḥ*) awful, catastrophic. *baxt-i ʃiswid* my luck is awful. *ya nhaar ʃiswid* what a black day! *ya sana sooda* good God! oh dear! ‖ *misik fid-duxxaan maska sooda* he got a hell of an addiction to tobacco. **2b** shameful. *ʕamlit-ak is-sooda* your shameful deed. **3** *(daaʃ) is-sooda* melancholia.
أسود *ʃaswad* /el/ blacker/blackest.
سوداوى *sawdaawi* /adj */ melancholic. *mazaag sawdaawi* a melancholic temperament (one of the four cardinal humours).
سواد *sawaad* /n/ blackness. *ya wel-hum ya sawaad lel-hum* O blackest woe for them! ‖ *tiʕmil kida ʕaʃaan sawaad ʕuyuun-i* ≈ (don't expect me to believe) you're doing that just for my sake!
السودان *ʃis-sudaan* /prop n/ Sudan. See further under س و د ن
سودانى *sudaani* **1** /adj */ Sudanese. ‖ *(fuul) sudaani* peanuts. **2** /n * and pl *-yya*/ a Sudanese.
سوّد *sawwid* /vt/ **1** to blacken. ‖ *sawwidt' wiff-i-na* you've disgraced us. **2** to make a rough copy of, draft. — /vi/ **3** to turn black. - vn *taswiid*; ava *misawwid*.
تسويدة *taswiida* /n pl *-aat*/ draft, rough copy.
اتسوّد *ʔitsawwid* or *ʔissawwid* /vi/ passive of *sawwid*. - iva *mitsawwid*.
اسودّ *ʔiswadd* /vi/ to become black. ‖ *ʔis-samak iswadd* the fish has rotted. - vn *ʔiswidaad*[†]; ava *miswidd*.
مسودّة *muswadda, miswidda* /n pl *-aat*/ draft, rough copy.

س و د ن see also س و د [2]
سودن *sawdin* /vt/ to Sudanize. - vn *sawdana*; ava/pva *misawdin*.
اتسودن *ʔitsawdin* or *ʔissawdin* /vi/ passive of *sawdin*. - iva *mitsawdin*.

س و ر [1]
ثار *saar*[1] *(u)* /vi/ **1** to become agitated. *ʔil-baḥr' saar* the sea became rough. **2** to blow up in anger. **3** to erupt (of a volcano). **4** to rebel, rise up. *ʔil-waad da mutamarrid saayir ʕala kull[a] ḥaaga* that kid is unsubordinate, rebelling against everything. - vn *ṣawra, sawaraan*; ava *saaʃir*[†], *saayir*.

ثار *saar² (i)* /vt/ to excite, stimulate. *bi-yiɛzif bi-ṭariiqa tsiir il-ʕaɛṣaab* he plays in a nerve-racking way. *ḫaaga bi-tsiir ihtimaam-i* something which excites my interest. - vn *ʕisaara*; ava *musiir*; pva *musaar*.

ثورة *sawra¹* /n pl *-aat, -aat*/ revolution, rebellion, insurrection.

ثورجى *sawragi* /n pl *-yya*/ **1** rebel, trouble-maker, agitator. **2** hot-tempered person, firebrand.

ثائر *saaʕir* /n pl *suwwaar*/ revolutionary, rebel, insurgent.

مثار *masaar¹↑* /n/ stimulus, spur.

أثار *ʕasaar* /vt/ **1** to excite, stimulate. *riwaaya musiira* a thrilling story. **2** to raise, pose, bring up. *ʕasart il-mawḍuuɛ min siniin* I brought the matter up years ago. -/the literary passive occurs/ *min kaam sana l-muʃkila di ʕusiirat* how many years ago was this problem raised? - vn *ʕisaara*; ava *musiir*; pva *musaar*.

استثار *ʕistasaar↑* /vt/ to excite, stimulate. - vn *ʕistisaara*; ava *mustasiir*; pva *mustasaar*.

س و ر ²

سور *sawar, sawar (i)* /vt/ to numb the hearing of, deafen. *ʕil-mazziika l-ɛalya sawarit-ni* the loud music deafened me. - vn *sawaraan*; ava *saawir*; ava *maswuur*.

سورة *sawra²* /inst n, pl *-aat*/ a deafening of the ears.

اتسور *ʕitsawar, ʕitsawar* or *ʕissawar, ʕissawar* /vi/ passive of *sawar*. - iva *mitsiwir*.

انسور *ʕinsawar* = *ʕitsawar*. - iva *minsiwir*.

س و ر ³

سور *suur* /n pl *ʕaswaar*/ surrounding wall, fence.

سورة *suura* /n pl *suwar*/ sura, chapter of the Koran.

أسورة *ʕaswira* /n pl *ʕasaawir*/ **1** bracelet. **2** arm bracelet, armlet. **3** cuff.

إسويرة *ʕisweera* /n pl *-aat*/ = *ʕaswira*.

سوّر *sawwar* /vt/ to surround with a fence. - vn *taswiir*; ava/pva *misawwar*.

اتسوّر *ʕitsawwar* or *ʕissawwar* /vi/ to be fenced around. - iva *mitsawwar*.

س و ر ⁴

سوريا *surya* /prop n/ Syria.

سورى *suuri* **1** /adj */ Syrian. **2** /n */ a Syrian.

س و ر ⁵ see س و ا ر ى : *sawaari*

س و ر ق

سورق *sooraq* /vi/ to faint. *qaɛadna nnakkit li-ɣaayit ma kunna ḫa-nsooraq mid-diḫk* we sat around telling jokes until we were about to faint with laughter. - vn *misorqa*; ava *misooraq*.

س و س ¹

سوس *suus¹* /coll n/ weevil(s), borer(s).

سوسة *suusa* /unit n pl *-aat*/ a weevil, a borer. ‖ *da raagil suusa* he's a scheming creep.

سوسايا *susaaya* = *suusa*.

سوّس *sawwis* **1** /vt/ **1a** to cause to decay. *ʕis-sukkar bi-ysawwis is-sinaan* sugar rots the teeth. **1b** to make worm-eaten or weevily. **2** /vi/ **2a** to decay, become decayed. **2b** to be or become worm-eaten or weevily. - vn *taswiis*; ava/pva *misawwis*.

تسويس *taswiis* /n/ **1** dry rot. **2** *[dent]* caries.

اتسوّس *ʕitsawwis* or *ʕissawwis* /vi/ **1** to decay, become decayed. **2** to become worm-eaten or weevily. - ava *mitsawwis*.

تسوّس *tasawwus↑* /n/ **1** dry rot. **2** *[dent]* caries.

س و س ²

سوس *suus²: rubb¹ suus* liquorice, sweets, liquorice pastilles. *ɛirq¹ suus* liquorice root, liquorice.

س و س ر ا

سويسرا *suwisra* or *siwisra* <It *Svizzera*> /prop n/ Switzerland.

سويسرى *suwisri* or *siwisri* **1** /adj */ Swiss. **2** /n */ a Swiss.

س و س ن

سوسن *sawsan* /coll n/ lily of the valley.

سوسنة *sawsana* /unit n, pl *-aat*/ a lily of the valley.

س و ط

سوط *sooṭ↑* /n pl *siyaaṭ*/ lash, whip.

سوطى *sooṭi: taṭɛiim sooṭi [hort]* splice-grafting.

س و ع see **س ا ع ¹** : *sawaaɛi*

س و غ

سوّغ *sawwaɣ* /vt/ to justify. *ma-fii-ʃ ḫaaga tsawwaɣ illi ḫaṣal minnak* nothing can justify what you've done. - vn *taswiiɣ*; ava *misawwaɣ, musawwiɣ*.

مسوّغ *musawwiɣ* /n pl *-aat*/ justification. ‖ *musawwiɣaat it-taɛyiin* papers necessary for appointment to a job, job credentials.

استساغ *ʕistasaaɣ↑* /vt/ to find palatable. - vn *ʕistisaaɣa*; ava *mustasiiɣ*; pva *mustasaaɣ*.

س و ف

مسافة *masaafa* /n pl *-aat*/ **1** distance. *sibaaḫit*

il-masafaat iṭ-ṭiwiila long distance swimming. **2** period of time. *baqaa-li masaafa ṭawiila ma-ʃuft-uu-ʃ* it's been a long time since I saw him. *fi-masaafit rubʕ' saaʕa* within a quarter of an hour. ‖ *ḥ-aṛiib masaafit is-sikka* I'll be straight back. **3** *[mus]* **3a** interval. *laḥn' mitkarrar ʕala masafaat muxtalifa* a melody repeated at varying intervals. **3b** interval, distance between the frets of a *ʕuud*. ¶ *masaafit ma* /conj/ while. *masaafit ma tgiib il-ʕeef yikuun il-ʕaʃa gihiz* by the time you've got the bread, dinner will be ready.

سوّف *sawwif* /vt and vi/ to delay, hold up. *min ḥaqq il-muwaẓẓaf ʕinnu ysawwif (f)il-ʕawraaq* the civil servant has the right to delay papers. - vn *taswiif*; ava/pva *misawwif*.

اتسوّف *ʕitsawwif* or *ʕissawwif* /vi/ to be delayed, be held up. - iva *mitsawwif*.

س و ق [1]

ساق *saaq[2] (u)* /vt/ **1** to drive, herd. *bi-tsuuq il-bihiima btaaʕit iṭ-ṭambuuʃa* she drives the beast that turns the water-wheel. **2** to drive, steer. *tiʕraf tisuuq ʕarabiyya* do you know how to drive a car? **3** to get (s.o.) to act as intermediary or intercessor. *suqt" ʕala ʃaxuu-ya ʃumm-i [prov]* (I had my mother straighten out things between my brother and me) ≈ in a dispute call for help from someone who cares about the welfare of both parties. ‖ *saayiq ʕaleek in-nabi* please, I beg you. **4** to adopt an attitude of, affect. *ʕinta leeh saayiq il-ʕind* why are you being so stubborn? *saaq il-habal ʕala ʃ-ʃayṭana* he played stupid to cover up his mischief. — /vi/ **5** to drive. *suuq ʕala mihl-ak* drive slowly! *ruxṣit siwaaqa* driving licence. **6** to persist, carry on beyond what is called for. *ma-tsuq-ʃ' ʃiiha* really, it's enough now! cut it out! ‖ *saaq (fid-)dalaal* to play hard-to-get. - vn *siwaaqa, siyaaqa*; ava *saayiq*.

سياق *siyaaq* /n/ **1** sequence, course. *siyaaq ik-kalaam* the thread of the conversation. **2** level. *ʕig-ganayni yqaṣqaṣ in-nabataat ʕafaan tibqa syaaq waaḥid* the gardener trims the plants to make them even. — /pl *-aat*/ **3** intermediary, go-between.

سوّاق *sawwaaq* /n */ driver. *sawwaaq taks* taxi-driver.

اتساق *ʕitsaaq* or *ʕissaaq* /vi/ passive of *saaq[2]*. - iva *mitsaaq*.

س و ق [2]

سوق *suuq* /n pl *ʃaswaaq, siwaaq*/ **1** bazaar, market, market-place. *suuq is-samak* the fish market. *taṛyiir il-ʕumla f-maṣr' kaan lu suuq zayy il-biḍaaʕa* the changing of money in Egypt had its own market just like any commodity. ‖ *ʕibn' suuq* a born businessman. **2** market (for a commodity), demand. *saʕaat bi-yibqa b-ʕirf' saaṛ wi-saʕaat bi-ʕirfeen - huwwa w-suuq-u* sometimes it costs one piastre, sometimes two - it all depends on the market.

سوقي *suuqi* /adj invar/ of poor quality. *saaʕa suuqi* cheap-quality watch. *fuṛl' suuqi* shoddy work.

سوقي *siwaqi* /adj * and pl *-yya*/ vulgar, plebeian, common.

سويقة *suweeqa* /n pl *-aat*/ small informal market.

سوّق *sawwaq* /vt/ to market, put on the market. - vn *taswiiq*; ava/pva *misawwaq*.

تسويق *taswiiq* /n/ marketing. *bi-yidris taswiiq* he's studying marketing.

اتسوّق *ʕitsawwaq* or *ʕissawwaq* /vi/ **1** passive of *sawwaq*. **2** to go shopping, go buying. - ava/iva *mitsawwaq*.

س و ك [1]

سواك *siwaak* /n pl *-aat, ʃiswika*/ a small stick with a softened tip used, especially in the villages, as a kind of tooth-brush.

مسواك *miswaak* /n pl *masawiik*/ = *siwaak*.

سوّك *sawwik* /vt/ to clean (the teeth) with a *siwaak*. - vn *taswiik*; ava/pva *misawwik*.

اتسوّك *ʕitsawwik* or *ʕissawwik* /vi/ **1** to be brushed clean with a *siwaak* (of the teeth). **2** to clean one's teeth with a *siwaak*. - ava/pva *mitsawwik*.

س و ك [2]

سوكة *sooka* /n pl *siwak, sokaat*/ sharp edge. *naʕʕamt' sookit looḥ il-qizaaz* I rounded off the sharp edge of the pane of glass.

س و ك ب –

سوكبيس *sawikbees* (also *sukubees*) /n/ fine fabric used for making handkerchiefs.

س و م

ساوم *saawim* /vt/ to bargain or haggle with. *ma-fii-ʃ fayda min misawmit it-tuggaar fi-siʕr' muḥaddad* there's no point in bargaining with merchants over a fixed price. - vn *misawma*; ava *misaawim*.

اتساوم *ʕitsaawim* or *ʕissaawim* /vi/ to bargain with one another. - ava *mitsaawim*.

س و و see **س.و.ء** : *saww, siwwa*

س و ى [1]

يسوى *yiswa* /vt, imperf only/ to have (the) worth (of). *da ma-yiswaa-ʃ* this isn't worth (the price). *ma-tiswaa-ʃ*

baṣṣa liiha it's not worth a glance. *ma-yiswaa-ʃ ʔirʃeen* it's not worth two piastres. ‖ *ʔilli yiswa wi-lli ma-yiswaa-ʃ* every Tom, Dick and Harry, as in *xalla lli yiswa wi-lli ma-yiswaa-ʃ yibahdil-ni* he let every Tom, Dick and Harry disgrace me.

سوى *siwa* /n/ **1** levelness, evenness. *hiyya wil-ħeeṭa siwa waaħid* it is flush with the wall. **2** cooking. *ma-b-taxud-ʃ' siwa ktiir* it doesn't take much cooking. *nuṣṣ' siwa* half-cooked. *beeḍ nuṣṣ' siwa* soft-boiled eggs. — /prep/ **3**↑ /w suff *siwaa* other than, except. *ma-lhaa-ʃ siwaa-k ya rabb* she has no-one but you, Lord.

سوا *sawa'* **1** /adv/ together. *ʔitʕaʃʃu sawa* they had dinner together. *ħa-yigra ʕeeh law miʃiit bil-ħalteen sawa* what will happen if I do both things together? **2** /adj invar/ alike, equal. *huwwa wil-ħumaar sawa* he and the donkey are just the same, he cannot be distinguished from a donkey. ‖ *ʕala ħaddin sawa* (it's) six of one and half a dozen of the other, it makes no difference.

سوا، سواء *sawa*[2], *sawaaʔ*↑, *suwaaʔ* /correlative conj/: *sawa ... sawa* (or *ʔaw* or *ya*) whether ... or. *tibʕa ħa-titgawwiz-u sawa ʃtaxalit sawa ma-ʃtaxalit-ʃ* she'll marry him whether she gets a job or not.

سيّان *siyyaan* /adj invar/ equal. *kull-u-kum ʕandi siyyaan* in my opinion you are all equal.

سوّى *sawwa* /vt/ **1** to give a straight profile to. *sawwu ṣufuf-kum* even up your lines! *ʔil-ħaddaad bi-ysawwi kaff il-faas* the blacksmith is straightening the edge of the hoe. *sawwa ʃanab-u* he trimmed his moustache. **2** to settle, arrange. *baʕd' xamsiin sana sawweena l-masaaʔil il-ʕaskariyya* after fifty years we have settled the military issues. *ħa-ysawwi kull' dyuun-ak* he'll settle all your debts. ‖ *sawwa l-hawaayil* he's done terrific things. **3** to cook. *ʔabl' ma tiṭħan il-bunn' laazim tisawwi l-fiṭiir* before she grinds the coffee she must bake the *fiṭiir*. ‖ *ʔasawwii-k min iḍ-ḍarb* I'll give you what for! I'll fix you! - vn *taswiyya*; ava/pva *misawwi*. ¶ *ʕamal wi-sawwa* intensive form of *ʕamal*, as in *ʔibn-i ʕamal wi-bn-i sawwa* my son did great things, *ʔaʕmil ʔeeh ʔasawwi ʔeeh* what on earth am I to do? *ʕamalit wi-sawwit fiyya* she caused me all manner of harm.

تسوية *taswiya, taswiyya* /n pl *-aat*/ settlement, agreement.

اتسوّى *ʔitsawwa* or *ʔissawwa* /vi/ passive of *sawwa*. - iva *mitsawwi*.

ساوى *saawa* /vt/ **1** to render level or even. *ʔil-infigaar saawa l-ʕimaara bil-ʔarḍ* the explosion levelled the building. *bi-nsaawi l-ʔarḍ' ʔabl' ma niħrit-ha* we level the land before ploughing it. *faʕr' msaawi* neatly trimmed hair. *saawi s-siriir* tidy the bed! *ʔil-loon bitaaʕ-u msaawi kull-u maʕa baʕḍ-u* its colour is even throughout. ‖ *kidb' msaawi wala sudq' mbaʕzaq [prov]* consistent lying is more credible than garbled truth. **2** to have the worth of. *ʔil-ʏiweeʃa l-maksuura di bi-tsaawi talaata gneeh* this broken bracelet is worth three pounds. *xamsa w-talaata ysaawu tamanya* five and three make eight. - vn *misawiyya*; ava/pva *misaawi*.

مساواة *musawaaħ*↑ /n/ equality. *ʔil-musawaah fil-furaṣ* equality of opportunity.

اتساوى *ʔitsaawa* or *ʔissaawa* /vi/ **1** passive of *saawa*. **2** to be equal. *ʔagzaaʔ mutasawya* equal parts. *ʔil-faqiir bi-yissaawa maʕa l-ʏani baʕd il-moot* poor and rich are equal after death. - vn *tasaawi*; ava *mitsaawi, mutsaawi*.

استوى *ʔistawa* /vi/ **1a** to become cooked, finish cooking. *ʔil-ʔakl' mistiwi* the food is ready to eat. **1b** to ripen, mature. *ʕuuṭa mistiwiyya* (over) ripe tomatoes. *xaʃab mistiwi* seasoned timber. **2** to be fed up, be at the end of one's tether. *ʔistawa min il-maʃy* he's sick and tired of walking. *ʔana staweet* I've had enough! **3** to become even. ‖ *xaṭṭ il-istiwa* the Equator. - vn *ʔistiwa*; ava *mistiwi*.

مستوى *mustawa* /n pl *mustawayaat*/ **1** standard, level. *mudarrisiin ʕala mustawa l-gamʕa* teachers at the university level. *fi-mustawa saṭḥ il-mayya* on a level with the surface of the water. *fooq mustawa in-naẓar* above eye level. **2** class, status. *ʔana miʃ min mustawaa-ha* I'm not of her class.

[2] س و ى see س و ء : *masaawi*

س و ى د

السويد *ʔis-siweed* /prop n/ Sweden.

سويدى *siwiidi* **1** /adj */ Swedish. **2** /n * and pl *siwiid*/ a Swede. **3** /n, no pl/ (Swedish) physical exercises.

س و ى س

السويس *ʔis-suwees* /prop n/ Suez. *qanaat is-suwees* the Suez Canal.

س و ى ف see [2] ب ن ى : *bani sweef*

س ى

سى *si* /w foll name/ **1** informal term of address or reference to a man (among the lower classes or between intimates). **2** respectful form of address (when used by an uneducated man addressing his superior).

[1] س ى ء see س ا ء : *saaʔ'*

² س ى ء see س و ء: *saaʕ*[1], *saaʕ*[2], *sayyiʕ*, *sayyiʕa*, *musiiʕ*

¹ س ى ب

ساب *saab (i)* /vt/ **1** to allow, permit. *ḥa-tsib-ha tiʃtaʁal* are you going to let her work? *ma-tsib-nii-ʃ ʃaʁlaṭ* don't let me make a mistake. **2a** to leave alone, leave be. *siib il-baab maftuuḥ* leave the door open. *siib ir-raagil li-hmuum-u* leave the man to his worries. *sib-ni f-ḥaal-i* let me be! *leeh bi-tsiib il-walad yiʕayyaṭ kida* why does she leave the boy crying like that? ‖*saayib daqn-u* he's letting his beard grow. **2b** to leave behind. *ʃana saayib miraat-i fil-balad* I've left my wife in the village. *saabit fanṭit-ha fil-beet* she left her bag at home. ‖*miʃ ḥa-nsiib ḥaqq-i-na maʕaa* we won't let him get away with it! **2c** to pass over, leave out. *ʃiktib ʕala saṭr' w-siib saṭr* write on a line and skip a line. *bi-tnaqqi l-quuṭa n-naffa wi-tsiib il-mistiwiyya* she picks out the firm tomatoes and leaves the soft ones. **3a** to leave, bequeath. *gidd-u sab-lu l-ʕimaara* his grandfather left him the building. **3b** to leave, deposit. *ḥ-asib-lak ik-kitaab maʕa l-bawwaab* I'll leave the book with the doorman for you. **3c** to leave as an after-effect. *ʃig-garḥ' saab ʕalaama* the wound left a scar. **4** to depart from, quit. *sibt ingiltira min sanateen* I left England two years ago. *ʃiza laqeet nafs-i taʕbaan ḥ-asiib if-fuxl' da* if I find I'm getting tired I'll pack up this job. **5a** to let go of, release. *siib il-ḥabl* let go of the rope! ‖*siib ʃiid-ak* (1) open your hand! (2) let go! **5b** to let free, release. *siib il-mayya min il-ḥooḍ* let the water out of the sink. *sib-ni ʕalee* let me at him! — /vi/ **6** to go loose, go uncontrolled. *ʃil-ḥabl' saab* the rope went slack. *mafaṣl-i saabit* my joints went loose, I went limp. *ʃil-bihiima sayba fil-veeṭ* the beast is loose in the field. *ʃil-ḥanafiyya sayba* the tap has been left on. ‖*rukab-i saabit* my knees turned to water. - *baṭn-i saabit* my bowels went loose. - *ʃiid-u sayba* he's extravagant. - *manaxiir-u sayba* his nose is runny. - *wisṭ-a-ha saayib* she has a swaying walk. - *ʕuqda sayba* granny knot. - *ʃil-ḥikaaya saabit xaaliṣ* the whole affair fell apart. - *saab ʕala rooḥ-u* he soiled himself. - *rooḥ-u saabit* he fainted. - *ʃil-waad saab* the boy ran wild, the boy strayed from the straight and narrow. - *ʃil-maal is-saayib yiʕallim is-sirqa [prov]* ≈ unwatched property encourages theft. - vn *sayabaan*; ava *saayib*.

¶ *saab ʕala* to mount (a female animal, of a male animal), as in *ʃil-ḥumaar saab ʕal-ḥumaara* the male ass mounted the female. — *siib-ak min* /fem *siib-ik min*, pl *sib-ku min*/ have done with! as in *siib-ak mik-kalaam il-faariʁ da* enough of this nonsense! *siib-ik minnu w-nirgaʕ liiki* forget about him, now let's come back to you.

سايب *saayib* /adj/ for sale unpackaged. *sukkar saayib* sugar sold loose. *laban saayib* unbottled milk.

اتساب *ʃitsaab* or *ʃissaab* /vi/ passive of *saab*. - iva *mitsaab*.

انساب *ʃinsaab* = *itsaab*. - vn *ʃinsiyaab*; iva *minsaab*.

انسياب *ʃinsiyaabˆ* /n/ **1** fluidity. **2** streamlining.

سيّب *sayyib* /vt/ **1** to cause to leave. *sayyibuu-ni l-balad* they made me leave the country. **2** to cause to relinquish. *sayyibt-u l-musaddas* I made him drop the gun. **3** to release. *sayyib il-mayya fiz-zarʕ* let the water onto the crops. *ʃismaʕ min hina w-sayyib min hina* ≈ let it in one ear and out the other. *sayyib-lu s-surʕ*[a] *ʕaʃaan yigri* loosen the reins so he'll run. ‖ *ʃif-farba sayyibit baṭn-i* the laxative loosened my bowels. - vn *tasyiib*; ava *misayyib*.

اتسيّب *ʃitsayyib* or *ʃissayyib* /vi/ passive of *sayyib*. - iva *mitsayyib*.

تسيّب *tasayyub* /n/ laxity, laisser-faire.

² س ى ب

سيبة *seeba* <perh T *sıpa* from P> /n pl *-aat*/ trestle, tripod. - also *sibya*.

س ى ج

سيجة *siiga* /n/ game resembling noughts and crosses. ‖*ḥa-nilʕab siiga ʕala baʕḍ* are we going to beat around the bush with each other?

س ى ح see also ¹ س و ح

ساح *saaḥ*[2] *(i)* /vi/ **1** to flow all over. *ʃil-mayya saaḥit ʕal-ʃarḍ* the water flooded the floor. ‖*ʃaʕr' saayiḥ* loose flowing hair. **2** to tour, travel. *nisiiḥ fi-blaad allaah* we tour around everywhere. **3** to melt, become melted. *xalli z-zibda tsiiḥ* let the butter melt. *ruṣaaṣ saayiḥ* molten lead. ‖*kaanu sayḥiin maʕa baʕḍ' fid-diḥk wi-nukat* they were in stitches with laughter and jokes. - *bint' sayḥa* a playful flirtatious girl. - *kull' ma b-afuf-ha kull' ma b-asiiḥ fi-gamal-ha* the more I see her the more I'm knocked over by her beauty. - vn *sayaḥaan*; ava *saayiḥ*.

سيّح *sayyaḥ* /vt/ **1a** (also *sawwaḥ*) to spill out (over a large area). *sayyaḥt il-mayya ʕala l-balaaṭ* I sloshed the water over the tiles. ‖*ḥ-asayyaḥ damm-ak* I'll beat you bloody! - *balwa msayyaḥa* a real calamity. **1b** to fill to overflowing. *sayyaḥ il-ḥooḍ* fill the sink to the brim! **2a** to melt (down). *sayyaḥit diḥn' liyyit il-xaruuf* she rendered the fat of the sheep's tail. *bi-ysayyaḥu s-samn* they clarify the butter. ‖ *ʃil-bint' di bi-tsayyaḥ-ni xaaliṣ*

this girl really makes me melt with desire. - *ʕil-mazziika msayyaḥaa-ni* the music has me really turned on. **2b** to defrost (a refrigerator). **3** to heat (stale bread in order to soften it). — /vi/ **4** to liquify. *ʕil-maɛguun sayyaḥ* the paste became runny. - vn *tasyiiḥ*; ava *misayyaḥ*.
اتسيّح *ʔitsayyaḥ* or *ʔissayyaḥ* /vi/ passive of *sayyaḥ*. - iva *mitsayyaḥ*.

س ى خ
سيخ *siix* /n pl *ʔasyaax, siyaax*/ **1** skewer. *ʔil-kabaab bi-yinḥaṭṭ[i] fil-ʔasyaax ɛala l-faḥm* the kebab is put on skewers over the charcoal. **2** rod, bar. ‖*siyaax liḥaam* welding electrodes.

س ى د see [1] س و د : *siid, sayyid, sayyida, sayyidi, siyaada*

س ى ر [1]
سار *saar[3] (i)* /vi/ to proceed. *ʔig-ganaaza saarit ʔizzaay* what route did the funeral follow? *xaṭṭ[i] seer* route. ‖*seer yimiin* right turn (traffic). - vn *seer*; ava *saayir*.
سير *seer* /n/ **1** conduct, comportment. *ḥusn is-seer wis-suluuk* good conduct. ‖*ʃahaadit seer wi-suluuk* character reference, testimonial. — /n pl *suyuur*/ **2** (machine) belt, conveyor or drive belt. **3** strap.
سيرة *siira* /n pl *siyar*/ **1** topic, subject. *fuḍḍ-i-na min is-siira di* let's drop the subject. ‖*wi-siirit-...* and the like of ..., as in *quṭuɛ il-ḥafiif wil-ʔafyuun wi-sirit-hum* damn hashish, opium and all that! - *kunna f-sirt-ak* we were talking about you. - *gaab (fi-)siirit* (1) to mention, speak of, as in *ma-bi-tgib-ʃ[i] sirt-u fig-gawaab* she doesn't mention him in the letter, *gibna siirit il-quṭṭ[i] ga ynuṭṭ* ≈ speak of the devil! (2) to speak badly of, as in *gaybiin fi-siirit miin* who are you running down? **2** reputation. *sirt-ak wisxa* you have a bad reputation. **3** folk epic, collection of narrative prose and verse about a folk hero. **4** biography, vita. *ʔis-siira (n-nabawiyya)* the biography of the Prophet Muhammad.
سيّارة *sayyaara†* /n pl *-aat*/ car, automobile. *qiṭaɛ ɣiyaar sayyaraat* car spares.
مسار *masaar[2]* /n/ **1** course. *masaar il-markib* the ship's course. **2** gait (of a horse).
سيّر *sayyar* /vt/ **1** to move, keep in motion. *fuuf waaḥid yisayyar if-fuɣl[i] fi-ɣyaab-i* find someone to look after things in my absence. **2** to help (e.g., a child) relieve himself. *xudi l-ɛayyil sayyarii* take the baby to the potty. **3** to streak, cause streaking in. *ʔis-sabɣa l-wiḥfa tsayyar il-qumaaʃ* bad quality dye streaks the cloth. — /vi/ **4** to become streaky. *wiff-u sayyar mil-ɛaraq* his face was streaked with sweat. - vn *tasyiir, tasyiir*; ava/pva *misayyar*.

تسييرة *tasyiira* /n pl *-aat, tasayiir*/ **1** instance noun of *tasyiir*. **2** body elimination. ‖*tasyiirit mayya* urination.
اتسيّر *ʔitsayyar* or *ʔissayyar* /vi/ **1** passive of *sayyar* 2 and 3. **2** to relieve oneself. *ʔil-ɛayyil itsayyar ɛala rooḥ-u* the baby wet himself. - ava/iva *mitsayyar*.
ساير *saayir* /vt/ to humour, go along with. *sayr-u l-ḥadd[i] ma tiɛraf ʔaxrit-u ʔeeh* play along with him until you know what he's getting at. ‖*misaayir ʔumuur-u* he's getting along, he's managing nicely. - vn *misayra*; ava *misaayir*.

س ى ر [2] see [1] ص ى ر : *misiir*

س ى ر ج
سيرج *siirig* /n/ sesame oil.
سيرجة *sirga* /n pl *-aat*/ mill for pressing vegetable oil. *zeet sirga* vegetable (cooking) oil.

س ى ز ل
سيزل *sayzal* <Engl> /n/ sisal (hemp). - also *sizaal*.

س ى س
سياسة *siyaasa* /n/ **1a** policy. **1b** politics. **2** tact. *bi-yɛaamil in-naas bis-siyaasa* he deals with people tactfully. ‖*fidd id-durg[i] bis-siyaasa* pull the drawer out gently.
سياسى *siyaasi* /adj */ **1** political. **2** diplomatic. *ʔis-silk is-siyaasi* the diplomatic corps.
¶ *siyasiyyan* /adv/ politically.
سايس *saayis[1]* /n pl *suyyaas, siyyaas*/ **1** stable groom. **2** garage attendant.
سايس *saayis[2]* /vt/ to handle with adroit care, nurse along. *saayis ʔumuur-ak* handle your affairs with tact. *ʔil-ḥuṣaan ɛaawiz misaysa* the horse needs a gentle hand. - vn *misaysa*; ava *misaayis*.
اتسايس *ʔitsaayis* or *ʔissayis* /vi/ passive of *saayis[2]*. - iva *mitsaayis*.

– س ى س ب see س س ب ا ن : *saysabaan*

س ى س ى
سيسى *siisi* **1** /coll n/ ponies. **2** /unit n, pl *sayaasi*/ a pony.

س ى ط
ساط *saaṭ (i)* /vi/ to become weak and watery (of food or drink). *ma-txallii-ʃ il-muluxiyya tsiiṭ* don't let the *muluxiyya* get watery. *qahwa sayṭa* weak coffee. - ava *saayiṭ*.

س ى ط ر
سيطر *sayṭar* /vi/ to dominate, become master. *fikra msayṭara* dominant idea. *bi-tḥibb' tsayṭar ɛala goz-ha* she likes to lord it over her husband. - vn *sayṭara*; ava *misayṭar*.
اتسيطر *ʔitsayṭar* or *ʔissayṭar* = *sayṭar*. - ava *mitsayṭar*.

[1] س ى ع see also و س ع
ساع *saaɛ (a)* /vt/ to hold, accommodate. *guḥr' diib yisaaɛ miit ḥabiib [prov]* ≈ there is always room for friends. ‖*ɋalb-u ma-ysaɛ-ʃ' ḥadd* he cares for no one. - *ʔid-dinya ma-hiyyaa-ʃ sayɛaa-na* the world cannot contain us (in our joy). - vn *sayaɛaan*; ava *saayiɛ*.
ساعى *saaɛa*[2] = *saaɛ*. - ava *misaaɛi*.
اتساعى *ʔitsaaɛa* or *ʔissaaɛa* /vi/ to be accommodated. *ʔil-filuus miʃ mitsaɛiyya fil-maḥfaẓa* the money won't fit into the wallet. - iva *mitsaaɛi*.

[2] س ى ع see [1] س ا ع : *saaɛa'*

س ى غ see also ص ى غ
ساغ، صاغ *saaɣ*[2] *(i)* /vt/ to work (fine metals). - vn *siyaaɣa*; ava *saayiɣ*.
صايغ *saayiɣ* /n pl *saaɣa, suyyaaɣ*/ goldsmith.
صاغة *saaɣa* /n/ goldsmiths' market, goldsmiths' quarter.
مصوغات *masuɣaatˆ, maṣuɣaatˆ* /pl n/ (metal, especially gold) jewelry.
صيغة *siiɣa* /n/ (metal, especially gold) jewelry.
مصاغ *masaaɣ, maṣaaɣ* /n/ (metal, especially gold) jewelry.
صيّغ *sayyaɣ* /vt/ to acquire jewelry (especially gold) for. - vn *tasyiiɣ*; ava/pva *misayyaɣ*.
اتصيّغ *ʔitsayyaɣ* or *ʔissayyaɣ* /vi/ **1** passive of *sayyaɣ*. **2** to acquire (gold) jewelry. - ava/iva *mitsayyaɣ*.

س ى ف
سيف *seef* /n pl *suyuuf*/ **1** sword. ‖*seef il-ɋiyaasa* ring gauge. - *seef il-ʔiid* side of the hand. - *raas-u w-ʃalf' seef* he is very stubborn, he is adamant, as in *ʔir-raagil raas-u w-ʃalf' seef ma-ybiɛ-haa-ʃ* the man won't sell it come hell or high water. - *seef ibn' zi yazan* proto-Muslim South Arabian hero of Egyptian folk literature, famous for his struggles and exploits against pagan negroes and Abyssinians. **2** scythe. **3** type of card game of chance.
سيّف *sayyif* /vt/ to mow with a scythe. - vn *tasyiif*; ava *misayyif*.
اتسيّف *ʔitsayyif* or *ʔissayyif* /vt/ to be mowed with a scythe. - iva *mitsayyif*.

[1] س ى ق
سيّق *sayyaɋ* /vt/ to scrub (a floor). - vn *tasyiiɋ*; ava *misayyaɋ*.
اتسيّق *ʔitsayyaɋ* or *ʔissayyaɋ* /vi/ to be scrubbed (of a floor). - iva *mitsayyaɋ*.

[2] س ى ق see [1] س و ق : *saayiɋ, sɪyaaɋ*.

س ى ك
سيكة *siika* <P *sih-gâh*> /n/ *[mus]* **1** the name given to the note E half flat. **2** mode in Arabic music beginning on E half flat and having B half flat. **3** a *naay* tuned to E half flat.

س ى ك ر ا ن see [1] س.ك ر

س ى ل
سال *saal (i)* /vi/ to flow, stream. *ʔid-dumuuɛ saalit min ɛenee-ha* the tears flowed from her eyes. - vn *seel, sayalaan*; ava *saayil*.
سيل *seel* /n/ flood, flow.
سيلان *sayalaan* /n/ *[path]* gonorrhea.
سايل *saayil* **1** /adj/ liquid, runny. ‖*filuus sayla* liquid money. **2** /n pl *sawaayil*/ liquid, fluid.
سيولة *siyuula* /n/ liquid state, fluidity.
سيّال *sayyaal* /n/ blaze (mark on a horse's face).
سيّالة *sayyaala* /n pl *-aat, sayayiil*/ pocket set into the side seam(s) of a galabiya.
سيّل *sayyil* **1** /vt/ to cause to flow or stream. **2** /vi/ to flow, stream. *ʔil-ɛaraɋ misayyil min wiff-u* sweat is pouring off his face. - vn *tasyiil*; ava/pva *misayyil*.
اتسيّل *ʔitsayyil* or *ʔissayyil* /vi/ to be made to flow. - iva *mitsayyil*.

س ى م
سيم *siim* <perh P *sîm*> /n/ code, secret language. *bitaaɛ it-talat waraɋaat raaxar luu siim* the three-card trick practitioner also has his own secret jargon.
سيمة *siima'* assonant intensifier, occurring with *ɋuma*. *ɛaamil li-nafs-u ɋiima w-siima* he gives himself airs. *laa-lu la ɋiima wala siima* he doesn't have even the look of worth.

س ى م ا
سيما *siima*[2] /n/ **1** cinema, movie-house. **2** *ʔis-siima* the cinema, the movies. **3** /pl *siyam*↓/ a small box with eye-piece for viewing transparencies. - also *sinima*.

[1] س ى ن
سين *siin* /fem n, pl *-aat*/ **1** twelfth letter of the Arabic alphabet. **2** /n, no pl/ abbreviation of *suʃaal* (= ques-

tion). *siin ɣala di* a question concerning this. *siin wi-giim* (abbreviation of *suʃaal wi-gawaab*) (1) question and answer. (2) cross-examination.

[2] س ی ن see س و ی : *siyyaan*

س ی ن ا

سيناء *siina* /prop n/ Sinai.

س ی ه see س ه

س ی و ا

سيوا *siiwa* /prop n/ Siwa Oasis and town.

سيوى *siiwi* /adj */ from or pertaining to Siwa Oasis. *balaḥ siiwi* Siwan dates, type of sweet black date.

ش

ش

ش *-ʃ* suffix signalling **1** negative state, when used in conjunction with the prefix *ma-* (q.v. sense 3). **2** a rhetorical negative. *ʕandak-ʃ' sgaara* you don't happen to have a cigarette, do you? *tigii-ʃ titʕaʃʃa ʕandina l-leelaa-di* won't you come and dine at our place this evening? for *ʁer-ʃ*, see *ʁeer*; for *tiqul-ʃ*, see *ʔaal*; for *lolaa-ʃ* and *lomaa-ʃ*, see *loola* and *looma* respectively.

ش ا ب

شاب *ʃaab*[1]*: ħariir ʃaab* raw silk.

ش ا د ر

شادر *ʃaadir* <P *châdar*> /n pl *ʃawaadir*/ **1** tent. **2** large covered wholesale market, central warehouse (e.g., for fruit or fish).

ش ا ش [1]

شاش *ʃaaʃ* /n/ gauze, muslin.

شاشة *ʃaaʃa*[1] /n pl *-aat*/ **1** /unit n/ a piece of gauze. **2** (film, television, radar) screen. **3** television tube.

ش ا ش [2] see ش ش ى : *ʃaaʃa*[2]

(ش ا ل)

شال *ʃaal*[1] <P *shâl*> /n pl *ʃilaan*/ **1** shawl. **2** length of muslin wound into a turban (see Pl.F, 14).

شال *ʃaal*[2] <Copt> /coll n/ Synadontis schall, a Nile fish. - also *ʃilaan*.

ش ا م [1]

الشام *ʃiʃ-ʃaam* /prop n/ the Levant, especially Syria and Lebanon.

شامى *ʃaami* **1** /adj/ pertaining to the Levant, especially Syria and Lebanon. ‖*dura ʃaami* maize (Zea mays). *-ʕeeʃ ʃaami* Arab-style bread made with white flour. *-ʃurb' ʃaami* way of smoking hashish in a *gooza* without water. **2** /n pl *ʃawaam*/ a Syrian, a Lebanese. ‖*ʃitlamm iʃ-ʃaami ʕal-maʁrabi* the Syrian got together with the Moroccan (of a combination of two extremes).

[2] (ش ا م)

شامة *ʃaama* /n pl *-aat*/ **1** mole, beauty spot. **2** birthmark.

شاميّة *ʃamiyya* /n pl *ʃawaami*/ rope made of fibre. ‖*gamʕ iʃ-ʃawaami [naut]* hauling the ship as close to the quay as possible.

ش ا ه

شاه *ʃaah* <P *shâh*> /n/ Shah (of Iran).

ش ا ه ى

شاهى *ʃaahi* <P *shâhî*> /n/ striped material of cotton and silk, particularly used for kaftans. ‖*ʕiʈr' ʃaahi* sweet pea.

(ش ا ى)

شاى *ʃaay* /n/ tea, drink of tea. *ʃaay kuʃari* drink of tea made by pouring boiling water over tea leaves in a glass.

ساية *ʃaaya* /n pl *-aat*/ baby's under-shirt.

(ش ء ش ء)

شأشأ *ʃaʃʃaʃ* <Copt> /vi/ to begin to appear (of dawn or blossoms). - vn *ʃaʃʃaʃa*; ava *miʃaʃʃaʃ*.

شئشاء *ʃiʃʃaaʃ* /n/ small amount (usually of liquid). *bi-ʃiʃʃaaʃ mayya* with a very little water.

ش ء م see [1] ش و م : *ʃuʃm, maʃʃuum, ʃitʃaaʃim, taʃaaʃum, mutaʃaaʃim*

ش ء ن
شأن *ʃaʔn* /n pl *ʃuʔuun*/ affair, matter. *ʃuʔuun iṭ-ṭullaab* (department of) student affairs. ‖*lu ʃaʔn* he is a man of standing. -*ṣaaḥib if-ʃaʔn* the party concerned. -*ʕinta ʃaʔn-ak ʕeeh* what business is it of yours?

ش ب ا ر
شبار *ʃabaar* /coll n/ type of Nile perch (Tilapia Zillii).
شبارة *ʃabaara* /unit n, pl -*aat*/ a Nile perch.

[1] ش ب ب
شبّ *ʃabb*[1] *(i)* /vi/ **1** to grow up, grow to maturity. *ʃiz-zarʕa ʃabbit* the crop has matured. *min ʃabb*[a] *ʕala ʃeeʔ ʃaab ʕalee [prov]* ≈ as the twig is bent so will the tree grow. **2a** to rise on tiptoes. *ʃabb*[a] *ʕaʃaan yiṭul-ha* he stood on tiptoes to reach it. **2b** to rear (of an animal). *ʃil-ḥuṣaan ʃabb*[a] *ʕala l-faras* the stallion mounted the mare. -vn *ʃabb, ʃababaan*; ava *ʃaabib*.
شبّ *ʃabb*[2] /n *ʃubúba/ [rur]* ox. ‖*ʃabb il-leel [bot]* marvel-of-Peru, four-o'clock (Mirabilis jalapa).
شابّ *ʃabb*[3], *ʃaabb* /n pl *ʃubbaan*/ youth, young man.
شابّة *ʃabba*[1] /n pl -*aat*/ young woman, young lady.
شبّاني *ʃubbaani* /adj/ pertaining to youth.
شباب *ʃabaab* /n/ **1** youth, youthfulness. *maat fi-ʃabaab-u* he died in his youth. -/adjectivally/ *ʃinta lissa ʃabaab* you're still young. **2** /coll n/ youth(s), young people.
شبوبيّة *ʃububiyya* or *ʃibubiyya* /n/ youth.
شبيبة *ʃabiiba* /coll n/ youth(s).

[2] (ش ب ب)
شبّة *ʃabba*[2] <P *shâb*> /n/ alum. ‖*ḥaraq ʃabba [magic]* to burn a piece of alum for the purpose of divining (from the shape into which it cools) the identity of one with the evil eye.
شوبّ *ʃubb* <Fr *chope*> /n pl -*aat*/ tall glass for cold drinks.

ش ب ت
شبث، شبت *ʃabat* /n/ dill. ‖*ʃabu ʃabat* type of poisonous spider.

ش ب س and ش ب ت see ش ب ث

[1] ش ب ح
شبّيح *ʃabbiiḥ* /n pl *ʃabbiiḥa*/ hooligan, thug.
شبّح *ʃabbaḥ*[1] /vi/ to be militantly aggressive, make an assault. -vn *taʃbiiḥ*; ava *miʃabbaḥ*.

[2] ش ب ح
شبّح *ʃabbaḥ*[2] /vt/ to streak, vein (e.g., colours). *ʃiswid miʃabbaḥ bi-ʃabyaḍ* black with white veins. -vn *taʃbiiḥ*; ava/pva *miʃabbaḥ*.
اتشبّح *ʔitʃabbaḥ* or *ʔiʃʃabaḥ* /vi/ to be streaked, be veined (e.g., of colours). -iva *miʃabbaḥ*.

[3] ش ب ح
شبح *ʃabaḥ* /n pl *ʃaʃbaaḥ*/ ghost, spectre.

[1] ش ب ر
شبّورة *ʃabbuura* <Copt> /n/ fog, mist, haze.
شبّر *ʃabbar*[1] /vi/ to become misty. *ʕenee-ha ʃabbarit* her eyes became misty. -vn *taʃbiir*; ava/pva *miʃabbar*.

[2] ش ب ر
شبر *ʃabar (u)* /vt/ to jinx, put a jinx on. -ava *ʃaabir*.
شبر *ʃibr* /n pl *ʃaʃbaar*/ span of the hand, measurement equal to the span of the hand. ‖*sigaara ʃibr* an extra-long cigarette.
شبرة *ʃibra: ʕatla w-ʃibra* a type of children's marble game.
شبّر *ʃabbar*[2] /vt/ to jinx, put a jinx on. -vn *taʃbiir*; ava/pva *miʃabbar*.

[3] ش ب ر see ش ب ا ر: *ʃabaar, ʃabaara*

[4] ش ب ر see ش ب و ر: *ʃabuura*

ش ب ر ا
شبرا *ʃubra* /prop n/ Shubra, a residential district in the north of Cairo.

ش ب ر ق
شبرق *ʃabraʕ* /vt/ to give a treat to. *ḥ-aʃabraʕ-u b-gineeh* I'll give him a pound as a treat. *ʃabraʕt*[a] *(ʕala) rooḥ-i* I gave myself a treat. -vn *ʃabraʕa*; ava/pva *miʃabraʕ*.
اتشبرق *ʔitʃabraʕ* or *ʔiʃʃabraʕ* /vi/ to give oneself a treat or be given a treat. -iva *mitʃabraʕ*.

ش ب س
اتشبّث *ʔitʃabbisˁ* or *ʔiʃʃabbisˁ* /vi/ to cling, hold on. *ʔil-bint*[i] *mitʃabbisa b-raʔy-a-ha* the girl is clinging to her opinion. -vn *taʃabbus*; ava *mitʃabbis, mutaʃabbis*.

ش ب ش ب
شبشب *ʃibʃib* <T *şıpşıp*> /n pl *ʃabaaʃib*/ pair of backless slippers, (loosely) pair of backless light shoes.
شبشب *ʃabʃib* /vi/ *[magic]* to cast a spell, specifically by beating the genitals with a slipper while pronouncing a magic formula (to jinx, e.g., an inattentive husband or a

female rival). - vn *fabfaba*; ava *mifabfib*.

سبسبه *fabfaba* /n/ *[magic]* ritual in which a woman casts a spell by beating her genitals with a slipper while pronouncing a magic formula.

مسبسب *mifabfib* /adj */ clever, skilful.

اتسبسب ʔitfabfib or ʔiffabfib /vi/ (impersonal) passive of *fabfib*. *yaama tfabfib-lu* oh! he's been subjected to sorcery many a time! - vn *tifabfiib*; iva *mitfabfib*.

ش ب ط

سبط *fabaṭ* or *fibiṭ (a)* /vi/ to cling, take hold. *fabaṭ fi-ʔumm-u* he clung to his mother. *ʔin-naar fibṭit fii* the fire got a hold on him. *fabaṭ fil-bint' fabṭa sooda* he fell for the girl in a big way. - vn *fabaṭaan, fabṭ*; ava *faabiṭ*.

سبطه *fabṭa* /pl *-aat*/ instance noun of *fabṭ*.

سبطان *fabṭaan* /adj */ clinging.

سبّيط *fubbeeṭ* /n/ name for various kinds of bristly or prickly wild plant, for instance burweed and alkanet. ‖*naas zayy if-fubbeeṭ* quarrelsome people.

اتسبط ʔitfabaṭ or ʔiffabaṭ /vi/ (impersonal) passive of *fabaṭ*. *ʔitfabaṭ fii ḥabl* a rope was fixed to it. - iva *mitfibiṭ*.

سبّط *fabbaṭ* /vt/ **1** to cause to cling or take hold. *fabbaṭt il-walad fiyya* I made the boy hold onto me. *fabbaṭ in-naar fid-duxxaan* let the fire get a hold on the tobacco. ‖*fabbaṭ iṣ-ṣamuula f-makan-ha* screw the nut on in its place. **2** to fix temporarily. *fabbaṭ il-makana l-ʏaayit ma nlaaqi mikaniiki* get the machine to hang together until we can find a mechanic. - vn *tafbiiṭ*; ava/pva *mifabbaṭ*.

اتسبّط ʔitfabbaṭ or ʔiffabbaṭ /vi/ passive of *fabbaṭ*. - iva *mitfabbaṭ*.

ش ب ع

سبع *fibiɛ (a)* /vi/ to become satiated, have one's fill. *ʏaklu lamma ʏifbaɛu* they eat until they're full. *fibiɛt' fii qarb* I got my fill of beating him. ‖*da maat wi-fibiɛ moot* he's been dead a long time. - vn *fabaɛ, fabaɛaan*.

سبع *fabaɛ (i)* /vt/ to satiate, give (s.o.) a fill of. - vn *fabɛ*; ava *faabiɛ*.

سبعه *fabɛa* /inst n, pl *-aat*/ a repletion, one's fill. *fabɛa kwayyisa* a satisfying meal. ‖*fabɛa baɛd' guuɛa* see *fabaɛa*.

سبعة *fabaɛa* /pl *-aat*/ instance noun of *fabaɛ*. *fabaɛa* (or *fabɛa*) *baɛd' guuɛa [prov]* a state of satiety after a state of hunger (applied, e.g., to a parvenu).

سبعان *fabɛaan* /adj */ **1** satiated, full (with food). ‖*ʔil-ʔakl' fif-fabɛaan xusaara [prov]* ≈ there's no point in gilding the lily. **2** deep (of water). *ʔil-baḥr' fabɛaan hina* the Nile is deep here. **3** full (of pleats). **4** wealthy.

سبّع *fabbaɛ* /vt/ **1** to satiate, satisfy. *da ʔakl' ma-ʏfabbaɛ-f* that food is not filling. *kalaam-ak fabbaɛ-ni bil-ʔimaan* your words have filled me with faith. ‖*kalaam-ak fabbaɛ-ni* (1) your words are more satisfying than food. (2) your talk turns me off eating, takes away my appetite. **2** to saturate, fill. **3** to make (e.g., a pleat) full. *fabbaɛt k-kusar* make the pleats deep. - vn *tafbiiɛ*; ava/pva *mifabbaɛ*.

اتسبّع ʔitfabbaɛ or ʔiffabbaɛ /vi/ **1** to be satiated, be satisfied. **2** to be saturated. *ʔil-ʔarḍ itfabbaɛit bil-mayya* the soil has become saturated with water. **3** to become thoroughly acquainted, acquire a thorough familiarity. *ʔana daaris il-fikra w-mitfabbaɛ biiha* I've examined the idea and am thoroughly acquainted with it. - ava/iva *mitfabbaɛ*.

أسبع ʔafbaɛ = *fabaɛ*. - vn ʔifbaaɛ; ava *mifbiɛ, mufbiɛ*.

ش ب ك '

سبك *fabak' (u)* /vt/ **1** to fasten, attach. *ʔufbuk il-baab ɛafaan il-hawa ma-ʏiqfil-uu-f* hook the door so the wind won't close it. *fabak il-waraq* he fastened the paper (with a clip or staple). ‖*fabak ʔidee* he clasped his hands. **2** to involve, engage. *ʔiz-zuruuf fabakit-ni* circumstances have involved me. **3** to arrange an engagement with. *ḥa-nufbuk-lu l-bint' di walla laʔʔa* shall we get him engaged to this girl or not? **4** to reserve (an article, with a down payment). *fabakt il-kursi b-xamsa gneeh* I reserved the chair with a five-pound payment. — /vi/ **5** to become fastened, become attached. *ʔis-samaka fabakit fiṣ-ṣinnaara* the fish got caught on the hook. **6** to become involved, become engaged. *fabakt' fil-xinaaqa* I got involved in the fight. - vn *fabakaan, fabk*; ava *faabik*; pva *mafbuuk*.

سبكة *fabka* /n pl *-aat*/ **1** instance noun of *fabk*. **2** engagement present of jewelry.

سبك[2] *fabak* /n/ **1** /coll n/ net(s), netting. **2** /pl *fibaak*/ grid, grill.

سبكة *fabaka* /n pl *-aat*/ **1** /unit n/ a net. *koorit tf-fabaka* netball. **2a** any of a range of reticular objects (e.g., hairnet, string bag, grid, grill, lattice). **2b** (communications) network, grid. *fabakit ṭuruq* network of roads. *fabakit tilifoon* the telephone network. **3** *[auto]* grill. **4** nasty affair, complicated business.

سبكي *fabaki* /adj/ reticular.

سبكيّه *fabakiyya* /n pl *-aat*/ retina.

سبّاك *fibbaak* /n pl *fababiik*/ **1** window. *fibbaak tazaakir* box office, ticket window. *firiit fibbaak* sash cord. **2** bed-end with metal bars.

مسبك *mafbak* /n pl *mafaabik*/ **1** any of a range of fastening devices such as a clasp, clip or pin. *mafbak*

waraq paper clip. *maʃbak ɣasiil* clothes peg, clothes pin. *dabbuus maʃbak* safety-pin. **2** brooch.

اتسبك *ʔitʃabak* or *ʔiʃʃabak* /vi/ to become involved. *ʔitʃabak bil-bint ʿala ţuul* he got involved with the girl straight away. - ava *mitʃibik*.

انسبك *ʔinʃabak* = *ʔitʃabak*. - vn *ʔinʃibaak*; ava *minʃibik*.

سبّك *ʃabbik* /vt/ **1** to fasten, attach (a number of things, or a number of times). *qaʿadna ţuul il-leel nifabbik il-waraq* we stayed up all night pinning the papers together. **2** to entangle. - vn *taʃbiik*; ava/pva *miʃabbik*.

مشبّك *miʃabbik* /n/ large lacy pastry, deep-fried and soaked in syrup.

اتشبّك *ʔitʃabbik* or *ʔiʃʃabbik* /vi/ **1** to be fastened. **2** to be entangled. - iva *mitʃabbik*.

استبك *ʔiʃtabak* /vi/ to become engaged, become entangled. *ʔiʃtabakna fi-xnaaqa kbiira* we got caught up in a big fight. *ʔig-geeʃ iʃtabak maʿa l-ʿaduw* the army engaged in battle with the enemy. - vn *ʔiʃtibaak*; iva *miʃtibik*.

استباك *ʔiʃtibaak* /n pl *-aat/ [mil]* engagement.

ش ب ك [2]

سبك *ʃubuk* <T *çubuk*> /n pl *-aat/ [obsol]* long pipe for smoking, chibouk.

سبكسى *ʃubukʃi* /n pl *-yya/* one who repairs and cleans chibouks.

ش ب ل

شبل *ʃibl* /n pl *ʔaʃbaal/* **1** lion cub. — *ʔaʃbaal* /pl n/ **2a** epithet given to junior players in a sports club (usually soccer). *ʔaʃbaal il-ʔahli* the Ahli juniors. **2b** Cub Scouts, Wolf Cubs.

ش ب ل و ن

سبلون *ʃabloon* <perh It *sciablona*> /n pl *-aat/ [text]* silkscreen.

ش ب ن see ش ب ى ن : *ʃibiin*

ش ب ن ى ز

سابونيز *ʃabuneez* <Fr *japonaise*> /adj invar/ sleeveless. *ʃasatiin ʃabuneez* sleeveless dresses.

ش ب ه

سبه *ʃabah [1] (i)* /vt/ to bring suspicion on. *wuquuf il-buks [i] quddaam il-beet ʃabah-na* the stopping of the police-wagon in front of the house cast suspicion on us. *maʃy-a-ha huwwa da lli ʃabih-ha* it's her behaviour that makes people think the worst of her. - vn *ʃabahaan*; ava *ʃaabih*; pva *maʃbuuh*.

يشبه *yiʃbih, yiʃbah* /vt and vi; imperf and vn only/ to resemble, bear a resemblance (to). *ʔiş-şuura ma-tiʃbih-nii-ʃ* (or *ma-tiʃbih-lii-ʃ*) the photo doesn't resemble me. *kull [i] ʃin-lu yiʃbih-in-lu [prov]* (everything has something resembling it) ≈ like to like, every Jack must have his Jill. - vn *ʃabah*.

سبه *ʃabah [2]* /n pl *ʔaʃbaah/* likeness, resemblance. *ʃabah biʿiid* a remote resemblance. *huwwa qariib-i wa-laakin miʃ ʃabah-i* he's my kinsman but has no resemblance to me. *ʔaʿraaq-u ʃabah ʔaʿraaq il-ʔishaal* its symptoms resemble those of diarrhoea. ‖*yixlaq min iʃ-ʃabah ʔarbiʿiin [prov]* (may He create forty of the same likeness!) exclamation on mistaking one person for another.

مشبوه *maʃbuuh* /adj */ suspect, fishy, open to suspicion. *bint [i] maʃbuuha* a girl with a bad reputation.

شبهة *ʃubha* /n pl *-aat/* suspicion. ‖*raagil ʃubha* a man who would bring suspicion on any one who might associate with him.

شبه *ʃibh* /n, in constr/ semi-, quasi, as in *ʃibh [i] laqab ʒayy [i] ʔustaaz* a semi-title like Mister. *ʃibh [i] gziira* peninsula.

شبيه *ʃabiih* /adj/ similar (to), resembling, like.

أشبه *ʔaʃbah* /el/ more/most like or resembling.

اتشبه *ʔitʃabah* ot *ʔiʃʃabah* /vi/ to fall under suspicion, be suspected. - ava/iva *mitʃibih*.

انشبه *ʔinʃabah* = *ʔitʃabah*. - ava/iva *minʃibih*.

شبّه *ʃabbih* /vt/ to liken, compare. *bi-tʃabbih-ni bin-naas il-ħaramiyya dool* do you liken me to those thieving people? - vn *taʃbiih*; ava *miʃabbih*.

¶ *ʃabbih ʿala* to try to place. *kunt [i] b-aʃabbih ʿaleek wi-lamma kkallimt [i] ʿrift-ak ʿala ţuul* I was trying to place you and when you spoke I knew you right away.

تشبيه *taʃbiih* /n/ **1** resemblance, likeness. ‖*fiif wi-taʃbiih* see *fiif*. **2** /pl *-aat/* simile.

اتشبّه *ʔitʃabbih* or *ʔiʃʃabbih* /vi/ **1** to be likened, be compared. **2** to affect an appearance. *ʔil-bint [i] ma-yṣaħħ [i]-ʃ titʃabbih bil-walad* a girl should not try to make herself look like a boy! - ava/iva *mitʃabbih*.

سابه *ʃaabih* /vt/ to resemble. - vn *muʃabha*; ava *muʃaabih*.

اتشابه *ʔitʃaabih* [↑] or *ʔiʃʃaabih* /vi/ to bear a resemblance. - ava *mitʃaabih*.

استبه *ʔiʃtabah* /vi/ to have suspicions, suspect. *ʔil-buliş iʃtabah fii w-gaab taʂriiħ bit-taftiiʃ* the police suspected him and obtained a search warrant. *riggaala muʃtabah fiihum* suspected men. - vn *ʔiʃtibaah*; ava *miʃtibih*; pva *muʃtabah*.

ش ب و ر

شابوزة *ʃabuura* /n/ prow. *min id-daffa lif-ʃabuura*

[prov] from first to last, from head to toe, all included.

ش ب ى

شابى *ʃaaba* /vi/ to reach up, try to reach (for s.th.). *ʃil-waad bi-yʃaabi ɛala l-burtuqaan* the kid is reaching up for the orange. - vn *miʃabiyya*; ava *miʃaabi*.

ش ب ى ن

شبين *ʃibiin* <Syr> /n pl *ʃaʃabiin/ [Chr]* **1** attendant on a bride or groom. **2** sponsor, godparent.

¶ *ʃibiin il-koom* /prop n/ Shibin el-Kom, the chief town of the province of Minufiya.

ش ت ا see ش ت ى : *ʃita*

ش ت ت

شتّ *ʃatt (i)* /vi/ **1** to clear out, leave in extreme annoyance. *zahaqit min goz-ha w-ʃattit min il-beet* she got fed up with her husband and left in a huff. **2** to wander, be distracted (of mind, thoughts etc.). *ɛaql-i bi-yʃitt* my mind wanders. — /vt/ **3** *[rur]* to pick up windfalls from (a tree). *ruḥt' laqeet in-naxla maʃtuuta* I went and found that all the dates scattered around the base of the palm had been picked up. - vn *ʃatt, ʃatataan*; ava *ʃaatit*; pva *maʃtuut*.

شتّة *ʃatta'* /n pl *-aat/* **1** instance noun of *ʃatt*. **2** /coll/ windfall(s). ‖ *quṭn' ʃatta [rur]* scraps of cotton overlooked by the pickers and gathered later.

شتّى *ʃatta²↑* /adj invar/ various, diverse.

شتّان *ʃattaan: farq' ʃattaan* a huge difference. *ʃattaan been(u) w-been (ʔaxuu)* there's a world of difference between (him) and (his brother).

شتّت *ʃattit* /vt/ **1** to scatter, spread out. *ʃattit il-muẓahra* he broke up the demonstration. ‖ *ʃinta ʃattitt' muxx-i* you've bewildered me. **2** to drive (s.o.) from his home. *lamma tʃattit il-ɣalbaan da ḥa-ylaaqi sakan ʃizzaay* if you transfer this poor man (to another city) how is he going to find a home? ‖ *ʃattit ik-koora* he kicked the ball out of play. - vn *taʃtiit*; ava/pva *miʃattit*.

اتشتّت *ʃitʃattit* or *ʃiʃʃattit* /vi/ passive of *ʃattit*. - iva *mitʃattit*.

ش ت ل

شتل *ʃatal (i)* /vt/ to plant seedlings in (the soil). *ruzz' maʃtuul* transplanted rice. *ḥa-niʃtil il-ʃarq' b-ruzz* we'll transplant rice seedlings. - vn *ʃatl*; ava *ʃaatil*; pva *maʃtuul*.

شتل *ʃatl* /coll n/ seedlings, cuttings.

شتلة *ʃatla* /n/ **1** = *ʃatl*. **2** /unit n, pl *ʃitaal/* a seedling.

شتلاية *ʃatlaaya* /unit n, pl *-aat/* a seedling.

مشتل *maʃtal* /n/ **1** /pl *maʃaatil/* plant nursery, arboretum. **2** transplant method of planting rice.

اتشتل *ʃitʃatal* or *ʃiʃʃatal* /vi/ to be transplanted. - iva *mitʃitil*.

شتّل *ʃattil* /vt/ to plant seedlings in the (soil). *ʃir-ruzz' lissa mʃattil ʃimbaariḥ* the rice was transplanted only yesterday. - vn *taʃtiil*; ava/pva *miʃattil*.

اتشتّل *ʃitʃattil* or *ʃiʃʃattil* /vi/ to be planted (of seedlings). - iva *mitʃattil*.

ش ت م

شتم *ʃatam (i)* /vt/ to abuse, revile, insult. *ma-ʃatam-ak ʃilla lli mballaɣ-ak [prov]* it is he who passes on another's abuse of you who really abuses you! - vn *ʃatm*; ava *ʃaatim*; pva *maʃtuum*.

شتيمة *ʃitiima* /n pl *ʃataayim/* insult, verbal abuse.

اتشتم *ʃitʃatam* or *ʃiʃʃatam* /vi/ to be abused, be reviled, be insulted. - iva *mitʃitim*.

انشتم *ʃinʃatam* = *ʃitʃatam*. - iva *minʃitim*.

ش ت ى

شتت *ʃatit (i)* /vi/ it rained. *ʃid-dunya lissa ʃatya* it's just rained. - vn *ʃita*; ava *ʃatya*.

شتا، شتاء *ʃita* /n/ **1** winter season. *gahhizna lif-ʃita* we prepared for the winter. ‖ *zayy' layaali f-ʃita* (as tedious) as winter nights. **2** rain.

شتوى *ʃitwi* /adj */ winter, wintery. *ʃiz-zarɛ if-ʃitwi* winter crops. *libs' ʃitwi* heavy clothing.

شتويّة *ʃitwiyya* /n pl *-aat/* winter season, winter period.

مشتى *maʃta* /n pl *maʃaati/* winter resort.

شتّى *ʃatta³* /vi/ **1** to spend the winter, hibernate. *ḥa-nʃatti fi-smaɛiliyya* we'll winter in Ismailia. **2** to dress in warm clothes. *ʃatteena badri s-sanaa-di* this year we started wearing our winter clothes early. **3** *ʃattit* = *ʃatit*. - vn *taʃtiyya*; ava *miʃatti*.

ش ج ر

سجر *ʃagar* /coll n, pl *ʃaʃgaar/* tree(s), shrub(s). *ʃaʃgaar ziina* ornamental trees and shrubs. *ʃaʃgaar il-quṭn* cotton plants.

شجرة *ʃagara* /unit n, pl *-aat/* a tree. *ʃagarit nasab* (or *ɛeela*) genealogical tree.

شجراية *ʃagaraaya* /n pl *-aat/* shrub, bush.

مشجّر *miʃaggar* /adj/ figured with flowers or plants. *qumaaʃ miʃaggar* flower- or foliage-patterned cloth.

ش ج ع

شجاع *ʃugaaɛ* /adj pl *ʃugɛaan/* brave, courageous.

شجاعة *ʃagaaɛa* /n/ bravery, courage. *ʃil-kasra tiɣlib iʃ-ʃagaaɛa [prov]* numbers overcome courage.

شجيع *ʃagiiɛ, ʃigiiɛ*ʲ 1 /adj pl *ʃugɛaan*/ brave, courageous. 2 /n/ hero of a Western (film or story).

شجّع *ʃaggaɛ* /vt/ 1 to encourage. *ʃaggaɛnaa ɛala kida* we encouraged him in this. 2 to cheer for, cheer on. *ʃaggaɛna l-fariiq* we cheered the team on. -vn *taʃgiiɛ*; ava *miʃaggaɛ*.

تشجيعى *taʃgiiɛi* /adj */ encouraging. *siɛrⁱ taʃgiiɛi [bank]* a (high) rate of exchange for foreign currency set in order to encourage, e.g., tourism.

مشجّع *muʃaggiɛ* /n */ fan, enthusiast. *ʃana min muʃaggiɛiin ik-koora* I'm a soccer fan.

اتشجّع *ʔitʃaggaɛ* or *ʔiʃʃaggaɛ* /vi/ 1 passive of *ʃaggaɛ*. 2 to take courage, pluck up courage. -ava/iva *mitʃaggaɛ*.

ش ج ن

سَجن *ʃagan* /n pl *ʃuguun, ʃaʃgaan*/ sorrow.

ش ح ب

شحوب *ʃuḥuub* /n/ paleness (of the skin).

شاحب *ʃaaḥib* /adj/ pale, white (of the skin).

ش ح ب ر

شحبر *ʃaḥbar* /vt/ *[slang]* to smudge, mess, dirty, blacken. -also *ʃaḥwar*. -vn *ʃaḥbara*; ava/pva *miʃaḥbar*.

اتشحبر *ʔitʃaḥbar* or *ʔiʃʃaḥbar* /vi/ *[slang]* to be smudged, messed, dirtied or blackened. -iva *mitʃaḥbar*.

ش ح ت

شحت *ʃaḥat (a)* /vt/ 1 to beg for. *ʔiʃḥat-lak riɣiif titɛaʃʃa bii* beg yourself a loaf of bread to eat for your supper. 2 to cadge, borrow. *ʃaḥattⁱ badla ɛaʃaan ʃaruuḥ il-ḥafla* I scrounged a suit so I could go to the party. — /vi/ 3 to go begging. *ɛallimnaa-hum if-ʃaḥaata sabaquu-na ɛal-ʃabwaab* (we taught them how to beg and they beat us to the doors) ≈ they bite the hand that fed them. -vn *ʔiḥaata, ʃaḥt*; ava *ʃaaḥit*; pva *maʃḥuut*.

شحّات *ʃaḥḥaat* /n */ beggar, mendicant. *ɛamliin nafs-u-hum ʃaḥḥatiin ɛaʃaan ma-yidfaɛuu-ʃ il-ʃugra* they're pretending to be destitute so they won't have to pay the rent. ‖*ʃaḥḥaat wi-ɛaayiz riɣiif [prov]* he is a beggar but (still he) insists on getting a (whole) loaf, ≈ beggars can't be choosers. - *ʔiʃ-ʃaḥḥaat lu nuṣṣ id-dinya [prov]* the beggar owns half the world (because he gets a share of everyone's possessions). -*ɀayyⁱ ʃaḥḥatiin is-sayyida [prov]* (1) (as swarming and insistent) as the beggars at Sayyida Zaynab. (2) (as sorry-looking a bunch) as the beggars at Sayyida Zaynab.

اتشحت *ʔitʃaḥat* or *ʔiʃʃaḥat* /vi/ 1 to be begged (for). 2 to be borrowed, be cadged. -iva *mitʃiḥit*.

شحّت *ʃaḥḥat* /vt/ to give, lend (with no thought of return). *ʃaḥḥatuu-na ʃwayyit malḥ*ᵃ *ɛala ma niʃtiri* (could you) give us some salt until we buy some? *ʃaḥḥattⁱ kull il-huduum il-ɋadiima* I gave away all the old clothes. *ʃaḥḥatuu-na ɋirʃⁱ lil-mawluud [beggars]* donate a piastre for the baby. -vn *taʃḥiit*; ava/pva *miʃaḥḥat*.

اتشحّت *ʔitʃaḥḥat* or *ʔiʃʃaḥḥat* /vi/ passive of *ʃaḥḥat*. *ʔij-jakitta di ʃʃaḥḥatit li-xamsiin nafar* this jacket has been lent to numerous people. -iva *mitʃaḥḥat*.

ش ح ح

شحّ *ʃaḥḥ (i)* /vi/ 1 to become scarce, dwindle. *kullⁱ ma n-naas bi-tiktar ʔil-masaakin bi-tʃiḥḥ* as people increase in number, housing becomes scarce. *ʔik-kabriit bi-yʃiḥḥ il-yomeen dool* matches are getting scarce these days. ‖ *ʔin-niil ʃaḥḥ* the Nile fell. 2 to behave in a miserly way. -vn *ʃaḥaḥaan, ʃaḥḥ, ʃiḥḥiyya*; ava *ʃaaḥiḥ*.

شحّ *ʃuḥḥ* 1 /n/ meanness. 2 /adj invar/ miserly.

شحيح *ʃiḥiiḥ* /adj/ 1 scarce, sparse, scant. 2 mean, miserly.

ش ح ر

شحار *ʃaḥaar* /n/ diphtherial infection (in animals).

شحّر *ʃaḥḥar* /vi/ to wheeze, croak (because of obstructions in the throat). -vn *taʃḥiir*; ava *miʃaḥḥar*.

ش ح ط

شحط *ʃaḥaṭ (a)* /vt/ 1 to drag, pull tautly (of a rope). 2a to tie up tightly. *ʔiʃḥaṭ-ha kwayyis bil-ḥabl* tie it firmly with the rope. 2b to fit firmly in place. *ʃaḥaṭ il-watad bi-fakuuʃ* he fixed the peg firmly in place with a hammer. *ʃaḥṭⁱ b-tasxiin [metal]* shrink-fitting. — /vi/ 3a to stick, become stuck. *ʔid-durgⁱ ʃaḥaṭ* the drawer stuck. 3b *[naut]* to run aground, take the ground. -vn *ʃaḥaṭaan, ʃaḥṭ*; ava *ʃaaḥiṭ*; pva *maʃḥuuṭ*.

شحط *ʃaḥṭ* /n pl *ʃuḥuuṭ, ʃuḥúṭa/ [deris]* very tall and big (of people).

شحّوطة *ʃaḥḥuuṭa* /n/ double-ended broad chisel with fine teeth.

اتشحط *ʔitʃaḥaṭ* or *ʔiʃʃaḥaṭ* /vi/ passive of *ʃaḥaṭ*. -iva *mitʃiḥiṭ*.

انشحط *ʔinʃaḥaṭ* = *ʔitʃaḥaṭ*. -iva *minʃiḥiṭ*.

شحّط *ʃaḥḥaṭ* /vi/ 1a to run out (e.g., of fuel). *ʔil-ɛarabiyya ʃaḥḥaṭit* the car has run out of petrol. ‖*geeb-i ʃaḥḥaṭ* I've run out of money. -*zoor-i ʃaḥḥaṭ* my throat has become dry. 1b to become used up, run out. *ʔig-gaaz ʃaḥḥaṭ min il-babuur* the primus stove is out of

paraffin. ‖ *ʕil-balaḥ bi-yʃaḥḥaṭ fil-buqq* dates make one's mouth dry. **2** *[naut]* to run aground, take the ground. — /vt/ **3** *[metal]* to shrink. *ʃaḥḥaṭ gilba* he shrank a bush. **4** to drag, pull tightly. - vn *taʃḥiiṭ*; ava/pva *miʃaḥḥaṭ*.

اتشحّط *ʔitʃaḥḥaṭ* or *ʔiʃʃaḥḥaṭ* /vi/ **1** to be shrunk. **2** to be pulled tightly. - iva *mitʃaḥḥaṭ*.

ش ح ط

شحطط *ʃaḥṭaṭ* /vt/ to drag, lug or send around from place to place. *ʃaḥṭaṭ-ni min maktab li-maktab* he sent me around from office to office (on a wild goose chase). - vn *ʃaḥṭaṭa*; ava/pva *miʃaḥṭaṭ*.

اتسحطط *ʔitʃaḥṭaṭ* or *ʔiʃʃaḥṭaṭ* /vi/ to be dragged or lugged around from place to place. - iva *mitʃaḥṭaṭ*.

ش ح ك ل

سحكل *ʃaḥkil* /vt/ to trip. - vn *ʃaḥkala*; iva *miʃaḥkil*.

اتسحكل *ʔitʃaḥkil* or *ʔiʃʃaḥkil* /vi/ to trip, stumble. *(qaliil il-baxt') yiʃʃaḥkil fi-bḍaan-u [prov]* (one destined to be unlucky) trips over his own balls. - vn *tiʃaḥkiil*; ava *mitʃaḥkil*.

ش ح م

سحم *ʃaḥm* /n pl *ʃuḥuum, ʃuḥumaat*/ **1** grease, lubricant, axle-grease. *lamma f-ʃaḥm' btaaɛ il-ɛarabiyya yixlaṣ ma-tiftaɣal-f' maẓbuuṭ* when the car runs out of lubricant it doesn't run well. **2a** fat. *ʃaḥm' w-laḥm* rubber-blubber, fat and flab. **2b** tallow.

سحمة *ʃaḥma* /n pl *-aat*/ a bit of grease. ‖*ʃaḥmit il-widn* ear-lobe.

سحماية *ʃaḥmaaya* = *ʃaḥma*.

شحمي *ʃaḥmi* /adj/ pertaining to grease.

شحّام *ʃaḥḥaam* /n */ greaser.

مشحمة *maʃḥama* /n pl *maʃaaḥim*/ **1** grease-gun. **2** lubrication point.

سحّم *ʃaḥḥam* **1** /vt/ *[mech]* to grease, lubricate. *ʃaḥḥam il-ɛarabiyya w-ɣayyar iz-zeet* grease the car and change the oil. **2** /vi/ to put on fat, become fatty. *ʃaḥḥam wi-laḥḥam* it put on fat and flesh. - vn *taʃḥiim*; ava/pva *miʃaḥḥam*.

مشحّم *miʃaḥḥam* /adj/ greasy, covered with (lubricating) grease. *huduum-i mʃaḥḥama* my clothes are all greasy.

اتسحّم *ʔitʃaḥḥam* or *ʔiʃʃaḥḥam* /vi/ to be greased, be lubricated. - iva *mitʃaḥḥam*.

ش ح ن [1]

سحن *ʃaḥan (a)* **1** /vt/ **1a** to load, load up, charge, freight. *saɛaat il-biḍaaɛa b-titsiriq fiʃ-ʃaḥn* sometimes the goods are stolen in loading. ‖ *ʕir-ragil-da maʃḥuun minnak* that man is full of malice for you. **1b** *[elec]* to charge. **2** /vi/ **2a** to be loaded up, be charged, be freighted (with cargo, fuel etc.). *ʕil-ɛarabiyya ʃaḥanit* the car has been fully loaded. **2b** *[elec]* to be charged. - vn *ʃaḥn*; ava *ʃaaḥin*; pva *maʃḥuun*.

سحنة *ʃuḥna, ʃaḥna, ʃiḥna* /n pl *-aat*/ **1** cargo, load. **2** (electric) charge.

اتسحن *ʔitʃaḥan* or *ʔiʃʃaḥan* = *ʃaḥan* 2. - iva *mitʃiḥin*.

ش ح ن [2]

شاحن *ʃaaḥin↑* /vt/ to quarrel with, dispute with. - vn *miʃaḥna*; ava *miʃaaḥin*.

اتشاحن *ʔitʃaaḥin↑* or *ʔiʃʃaaḥin↑* /vi/ to quarrel (with o.a.). - ava *mitʃaaḥin*.

ش ح و ر

شحور *ʃaḥwar* /vt/ *[slang]* to smudge, mess, dirty, blacken. - also *ʃaḥbar*. - vn *ʃaḥwara*; ava/pva *miʃaḥwar*.

اتشحور *ʔitʃaḥwar* or *ʔiʃʃaḥwar* /vi/ *[slang]* to be smudged, messed, dirtied or blackened. - vn *tiʃaḥwiir*; iva *mitʃaḥwar*.

ش خ ب

شخب *ʃaxab (u)* /vi/ to gush (with a gurgling sound). ‖*damm-u baqa yiʃxub* his blood was spurting out. - vn *ʃaxb, ʃaxabaan*; ava *ʃaaxib*.

ش خ ب ط

سخبط *ʃaxbaṭ* /vi/ to scrawl, scribble. - vn *ʃaxbaṭa*; ava/pva *miʃaxbaṭ*.

شخبوطة *ʃaxbuuṭa* /n pl *ʃaxabiiṭ*/ scribble, scrawl.

سخبطيطة *ʃaxbaṭiiṭa [children]* = *ʃaxbuuṭa*.

اتشخبط *ʔitʃaxbaṭ* or *ʔiʃʃaxbaṭ* /vi/ to be scrawled, be scribbled. - iva *mitʃaxbaṭ*.

ش خ خ

سخ *ʃaxx (u)* /vt/ *[coarse]* to excrete. *ʃaxx it-tiqiila* (or *xara* or *wasaaxa*) to shit. *ʃaxx' mayya* (or *il-xafiifa*) to pee. - vn *ʃaxx, ʃaxaxaan*; ava *ʃaaxix*; pva *maʃxuux*.

شخّة *ʃaxxa* /n pl *-aat*/ **1** /inst n/ a (single) urination or defecation. ‖*raaḥ ʃaxxa f-ḥammaam [coarse]* he died in total obscurity. **2** stool or (specific amount of) urine. ‖*ʃaxxit il-ɛaguuza [coarse]* dry *muluxiyya* cooked and eaten cold. - *ʕabu* (or *ʕumm'*) *ʃaxxa [deris]* (1) a bed-wetter. (2) a child who wets or soils himself. (3) a nobody.

شخاخ *ʃuxaax* /n/ urine or faeces.

شخّاخ *ʃaxxaax* /n */ *[abus]* one who frequently wets or soils himself.

اتسخّ ʔitfaxx or ʔiffaxx /vi/ to be excreted. - iva *mitfaxx*.
انسخّ ʔinfaxx = ʔitfaxx. - iva *minfaxx*.
شخّ *faxxax* /vt/ to cause to excrete. *faxxaxit il-waad* she put the kid on the potty. ‖*faxxaxt-u min il-xoof [coarse]* I scared him shitless. - vn *tafxiix*; ava *mifaxxax*.
اتشخّ ʔitfaxxax or ʔiffaxxax /vi/ to be made to excrete. - iva *mitfaxxax*.

ش خ ر

سخر *faxar (u)* /vi/ *[coarse]* to snort, grunt. *faxart-i-lu* I snorted at him (I made what is considered a vulgar sound, to show my annoyance with him). - vn *faxr*; ava *faaxir*.
سخرة *faxra* /n pl *-aat*/ **1** /inst n/ a snort. **2** a snore.
سخير *fixiir* /n/ (sound of) snoring. *zahaqt[i] min fixiir-u l-ɛaali* I'm fed up with his loud snoring.
اتسخر ʔitfaxar or ʔiffaxar /vi/ (impersonal) passive of *faxar*. *lamma qult-i-lhum ɛala raʕy-i ʔitfaxar-li* when I told them my opinion I was pooh-poohed. - iva *mitfixir*.
سخّر *faxxar* /vi/ to snore. - vn *tafxiir*; ava *mifaxxar*.

ش خ ر م

شخرم *faxram* /vt/ *[slang]* to wreck, derange, mess up, confuse. - vn *faxrama*; ava/pva *mifaxram*.
اتسخرم ʔitfaxram or ʔiffaxram /vi/ to be wrecked, deranged, messed up or confused. - iva *mitfaxram*.

ش خ ش خ

شخشخ *faxfax* **1** /vt/ to cause to rustle, rattle or jingle. *faxfax il-filuus fi-geeb-u* he jingled the money in his pocket. ‖*qaɛad yifaxfax il-waad ɛala riglee* he sat dandling the boy on his knee. **2** /vi/ to rustle, rattle, jingle. *faxfaxit iṣ-ṣagaat* the jangling of finger cymbals. - vn *faxfaxa*; ava/pva *mifaxfax*.
شخشيخة *fuxfeexa* /n pl *faxafiix*/ **1** rattle (toy). **2a** small cupola (of carved wood and with small windows) over a *durqaaɛa*. **2b** gazebo.
اتشخشخ ʔitfaxfax or ʔiffaxfax /vi/ to rustle or be made to rustle, rattle or be made to rattle, jingle or be made to jingle. - ava/iva *mitfaxfax*.

ش خ ش ل ل

شخشلى *faxfulli* /coll n/ variety of tumbler pigeon distinguished by a white neck.

ش خ ص

شخص *faxṣ* /n pl ʔa*faxaaṣ*/ person, individual.
شخصى *faxṣi* /adj */ personal, private. *ḥikaaya faxṣiyya* a personal matter. *biṭaaqa faxṣiyya* identity card.
¶ *faxṣiyyan* /adv/ personally.
شخصيّة *faxṣiyya* /n pl *-aat*/ **1** personality. ‖*ma-lii-ʃ faxṣiyya maɛ'aakum* you don't respect me. **2** character (in a play etc.).
شاخص *faaxiṣ* /n pl *fawaaxiṣ*/ **1** pole, rod (for sighting, measuring etc.). **2** target (in shooting).
شخّص *faxxaṣ* /vt/ to diagnose. - vn *tafxiiṣ*; ava/pva *mifaxxaṣ*.
تشخيص *tafxiiṣ* /n/ acting.
مسخصيّة *mifaxxaṣiyya* /n/ *[obsol]* drama, acting.
مسخّصاتى *mifaxxaṣaati* /n pl *-yya*/ **1** *[obsol]* actor. **2** disparaging form of reference to an actor.
اتشخّص ʔitfaxxaṣ or ʔiffaxxaṣ /vi/ to be diagnosed. - iva *mitfaxxaṣ*.

ش خ ط

سخط *faxaṭ (u)* /vi/ to shout angrily, bawl. *faxaṭ fil-muwaẓẓaf* he bawled out the employee. *faxṭ[i] w-naṭr* roaring and bellowing. - vn *faxṭ*; ava *faaxiṭ*.
شخطة *faxṭa* /inst n, pl *-aat*/ an angry shout.
اتشخط ʔitfaxaṭ or ʔiffaxaṭ /vi/ (impersonal) passive of *faxaṭ*. *ʔitfaxaṭ fiina* we were shouted at. - iva *mitfixiṭ*.

ش خ ل ع

شخلع *faxlaɛ* /vt/ **1** to cause to move sensuously, cause to sway. *ʔiṭ-ṭabl[i] bi-yfaxlaɛ ir-raqqaaṣa* the drumming makes the dancer move sensuously. **2** to give a hard time to. - vn *faxlaɛa*; ava/pva *mifaxlaɛ*.
مشخلع *mifaxlaɛ* /adj/ alluring. *bint[i] mifaxlaɛa* a dishy girl. *fustaan mifaxlaɛ* an immodestly fetching and fancy dress.
مسخلعة *mifaxlaɛa* /n pl *-aat*/ *[rur]* a broad and heavily ornamented gold necklace.
اتشخلع ʔitfaxlaɛ or ʔiffaxlaɛ /vi/ to move sensuously. *bi-titfaxlaɛ zayy il-vaziyya* she shakes herself like a belly-dancer. - ava *mitfaxlaɛ*.

ش خ ل ل

شخلل *faxlil* **1** /vt/ to cause to jingle or rattle. **2** /vi/ to rattle, jingle. *sidr-u bi-yfaxlil* his chest rattles. - vn *faxlala*; ava/pva *mifaxlil*.

شخلولة *faxluula* /n pl *faxaliil*/ metal jingle (especially of a tambourine).
سخليلة *fuxleela* = *faxluula*.
اتشخلل ʔitfaxlil or ʔiffaxlil /vi/ to jingle or be made to jingle, rattle or be made to rattle. - ava/iva *mitfaxlil*.

ش د خ

سدخ *fadax (a)* /vt/ to crack. *kida fadaxt il-kubbaaya*

now you've cracked the glass! - vn *ʃadx, ʃadaxaan*; ava *ʃaadix*; pva *maʃduux*.

شدخ *ʃadx* /n pl *ʃuduux*/ crack.

اتشدخ *ʔitʃadax* or *ʔiʃʃadax* /vi/ to be cracked. - iva *mitʃidix*.

انشدخ *ʔinʃadax* = *ʔitʃadax*. - iva *minʃidix*.

ش د د

شدّ *ʃadd (i)* /vt/ **1** to pull. *ʃaddu l-ɛarabiyya* they towed the car. *ʃadd is-sifoon* he flushed the lavatory. *ʃadd' nafaseen min is-sigaara* he took two drags on the cigarette. ‖ *ʔil-ħikaaya di bi-tʃidd intibaah in-naas* this affair draws people's attention. **2a** to pull taut, tighten. *ʃadd iṭ-ṭabla* he tightened the drumhead. *ħaaga bi-tʃidd il-ʔaɛṣaab* something which tenses the nerves. ‖ *[ʃidd' ħeel-ak* ≈ take courage (phrase of encouragement to one in difficult circumstances, the response being *ʔiʃ-ʃadd[a] ɛal-alla). - ʃadd[a] ɛalayya s-salx* ≈ he made cruel fun of me. **2b** to tune (a stringed instrument). **3** to saddle, harness (an animal). — /vi/ **4** to pull, tighten. *lamma yinʃaf bi-yʃidd* when it dries, it pulls together. *baṭn-i bi-tʃidd[a] ɛalayya* my stomach is cramping me. **5** to become firm or severe. *ʔil-mudarris ʃadd[a] ɛala t-talamza* the teacher clamped down on the pupils. - vn *ʃadd, ʃadadaan*; ava *ʃaadid*; pva *maʃduud*.

¶ *ʃidd* /fem *ʃiddi*, pl *ʃiddu/ [joc]* move! speed up!

شدّة *ʃadda* /n pl *-aat*/ **1** instance noun of *ʃadd. maʃduud ʃadda waħda* evenly stretched. **2** skeleton, frame (e.g., for a reinforced concrete floor or ceiling, for a boat). *ʔiʃ-ʃadda btaaɛit ik-kiliim* the structure of warp and weft threads in a carpet. ‖ *laazim niɛmil-lu ʃadda* we must put a splint (or splints) on him. **3** *[mil]* pack, kit. **4** *[gram]* diacritical mark placed over a consonant to denote doubled value.

سدّة *ʃidda* /n/ **1** strength, intensity. *ʃiddit if-ʃams* the strength of the sun. *rafaq bi-ʃidda* he refused vehemently. *ʔuɤma ɛalee min ʃiddit il-farħa* he fainted from sheer joy. **2** hardship, distress.

سدّيّة *ʃiddiyya* /n/ **1** strength. **2** hardship, distress.

سديد *ʃidiid* /adj pl *ʃudaad, ʃidaad*/ **1** strong, robust. *raagil ʃidiid lif-fuɤl* a strong man for the work. *ʔarḍ' ʃdiida* rich land, fertile land. **2** intense, severe, extreme. *ḍoo ʔʃidiid* intense light. *ʃidiid iz-zaxrafa* heavily ornamented. *ħiraasa ʃdiida* close guard, heavy guard. *maraḍ ʃidiid* severe illness. *kalaam ʃidiid* or *lahga ʃdiida* extreme language.

أسدّ *ʔaʃadd* /el/ more/most strong, intense etc. *ʔil-xinaaqa dayra ɛala ʔaʃadd-a-ha* the quarrelling has reached fever pitch.

شدّاد *ʃaddaad* /n pl *-aat*/ any of a number of devices the purpose of which is to provide tension or traction (e.g., a splint, chain-adjustor). ‖ *ʔibn' ʃaddaad* (1) heavy smoker of hashish (usually in a *gooza*). (2) see *ɛantar*. - *ʔaal ʃaddaad* hashish-smokers.

مشدّ *miʃadd* /n pl *-aat*/ corset, girdle.

اتشدّ *ʔitʃadd* or *ʔiʃʃadd* /vi/ passive of *ʃadd*. - iva *mitʃadd*.

انشدّ *ʔinʃadd* = *ʔitʃadd*. - iva *minʃadd*.

شدّد *ʃaddid* **1** /vt/ to intensify. *ʔil-buliiṣ ʃaddid ir-riqaaba ɛala l-beet* the police intensified surveillance of the house. **2** /vi/ to act firmly, act severely. *ʃaddid ɛala l-walad ʃiwayya* be a bit (more) severe with the boy! - vn *taʃdiid*; ava *miʃaddid*.

اتشدّد *ʔitʃaddid* or *ʔiʃʃaddid* /vi/ to be intensified. *ʔir-riqaaba tʃaddidit* surveillance was intensified. - iva *mitʃaddid*.

متشدّد *mutaʃaddid*↑ /adj */ bigoted.

اشتدّ *ʔiʃtadd* /vi/ to become intense, become stronger. *ʔik-kuḫḫa ʃtaddit* the cough became more severe. ‖ *ya ʔarḍ iʃtaddi ma ɛaleeki qadd-i* (Earth, pull yourself together! no one as great as me walks your surface) ≈ I'm the best there is! (comment on arrogance). - vn *ʔiʃtidaad*; ava *miʃtidd, muʃtadd*↑.

ش د ر see ش ا د ر : *ʃaadir*

ش د ق

سدق *ʃidq* /n *ʃidaaq, ʃiduuq*/ side of the mouth. ‖ *ʔabu ʃdaaq* wide-mouthed, fleshy-faced.

اتشدّق *ʔitʃaddaq* or *ʔiʃʃaddaq* /vi/ **1** *[deris]* to chew. *ṭuul in-nahaar titʃaddaq bil-libaan* all day long she chews away at gum. **2**↑ to repeat erudite words senselessly. - also *ʔitmaʃdaq*. - vn *taʃadduq*↑; ava *mitʃaddaq*.

ش د ه

شده *ʃadah (a)*↑ /vt/ to surprise. - vn *ʃadh*; ava *ʃaadih*; pva *maʃduuh*.

اتشده *ʔitʃadah* or *ʔiʃʃadah* /vi/ to be surprised, be perplexed. - iva *mitʃidih*.

انشده *ʔinʃadah* = *ʔitʃadah*. - iva *minʃidih*.

ش د و ف

شادوف *ʃaduuf* /n pl *ʃawadiif*/ counterpoised implement for raising irrigation water, shadoof (see Pl.E, 14).

ش د ى

شادى *ʃaadi*↑ /n/ (male) singer.

شادية *ʃadya*↑ /n pl *-aat*/ female singer.

ش ذ ذ see ش ز ز

ش ذ ل see ش ز ل

ش ذ و see ش ز و

ش ر ا ب
شراب *ʃuraab, ʃaraab*[1] <T *çorap*> /n pl *-aat*/ pair of socks, pair of stockings. *koora ʃaraab* cloth ball used in street games.

ش ر ا ق
شراق *ʃiraaq* /n/ pitchpine.

ش ر ء ب
شرأب *ʃarʔab* /vt/ to stretch, crane (one's neck or head). *bi-yʃarʔib raas-u w-yirakkiz ɛeen-u* he cranes his neck and stares fixedly. - vn *ʃarʔaba*; ava/pva *miʃarʔib*.

ش ر ب [1]
شرب *ʃirib (a)* /vt/ **1** to drink. *ʃiribt il-murr* I've drunk (from the cup of) bitterness. *w-ana b-aɛuum b-afrab mayya ktiir* when I swim I swallow a lot of water. *nifrab fi-ṣiḥḥit-u* let's drink his health. ‖*ʃaarib min bizz umm-u* (he has drunk from his mother's breast) said of someone possessing great strength and courage. - *ʕiʃrab mil-baḥr* ≈ to hell with you! - *huwwa b-yiʃrab* he drinks (alcoholic drinks). **2** to absorb, drink in. *lamma r-ruzz*[i] *yiʃrab il-mayya* when the rice absorbs the water. *ʃirib il-kaar w-huwwa ṣyayyar* he learned the trade while he was young. **3** to smoke (cigarettes). *ʕinta miʃ laazim tiʃrab sagaayir kitiir* you must not smoke a lot. - vn *ʃurb*; ava *ʃaarib*; pva *maʃruub, maʃruub*.
مشروب *maʃruub* /n pl *-aat, maʃariib*/ drink, beverage. *ʕiʃtaraa-li maʃruub* he bought me a drink.
شربة *ʃarba* /n/ **1** /inst n, pl *-aat*/ a (single) drink. ‖*raaḥ fi-ʃarbit mayya* (1) he died a sudden or pointless death. (2) he (or it) was a complete flop. **2** /pl *ʃurab*/ purgative. *ʃarbit malḥ ingiliizi* dose of Epsom salts. ‖*ʕil-ɛaruusa ṭilɛit ʃarba* the bride turned out to be a disappointment. see further under ش ر ب ا ت
شربان *ʃarbaan* /adj */ **1** having had a drink of water or beverage. *ʕil-ʕarḍ*[i] *ʃarbaana* the land has been given water. *ʕana ʃarbaan talaata ɛaṣiir* I've just had three (glasses) of juice. **2** having absorbed or thoroughly learned (e.g., a skill). *ʃarbaan iṣ-ṣanɛa min ʕahl-a-ha* he has learnt the craft from its masters.
شوربة *ʃurba* **1** /n/ soup, broth. **2** /adj invar/ useless. *goon ʃurba* a useless goalkeeper.
شرب *ʃirb* /n/ *[rur]* dried mud.
شربة *ʃirba* /n/ breeze, fresh air. -/adjectivally/ *ʕooḍa ʃirba* an airy room.

شراب *ʃaraab*[2] /n/ beverage with a fruit base.
شرّيب *ʃarriib* /n pl *ʃarriiba*/ heavy drinker (of spirits).
مشربيّة *maʃrabiyya* /n/ **1** /pl *-aat/ [obsol]* small external platform projecting from the *maʃrafiyya* (used for the purpose of cooling jars of water). **2** /no pl/ **2a** (loosely) the technique and product of turned wood-work (cf *maʃrafiyya*). **2b** eye (of a needle).
اتشرب *ʕitʃarab* or *ʕiʃʃarab* /vi/ **1** to be drunk. *ʕiʃ-ʃaay iʃʃarab* the tea was drunk. **2** to be absorbed. **3** to be smoked. - iva *mitʃirib*.
انشرب *ʕinʃarab* = *ʕitʃarab*. - iva *minʃirib*.
شرّب *ʃarrab*[1] /vt/ **1** to give to drink. *ʃarrab il-firaax* he watered the chickens. *ʃarrabt-a-ha ḥaaga saqɛa* I gave her a cold drink. ‖*ʃarrab-ha min kiɛan-ha* he gave her a hard time. **2** to cause to absorb. *miʃarraba b-loon ʕaḥmar* tinted with red. **3** to make to smoke. **4** to air (e.g., a room). — /vi/ **5** to make way for a current of air to enter. - vn *taʃriib*; ava/pva *miʃarrab*.
اتشرّب *ʕitʃarrab*[1] or *ʕiʃʃarrab*[1] /vt/ **1** to be caused to absorb or soak up. **2** (also *ʕitʃarrab nafas-u*) to catch one's breath, take a breather. *ʕuqɛud iʃʃarrab (nafas-ak) mis-sillim* sit down and catch your breath after (climbing) the stairs. - vn *taʃarrub*; iva *mitʃarrab*.

ش ر ب [2]
شراب *ʃurraab* /coll n/ tassel(s).
شرّابة *ʃurraaba* /unit n, pl *ʃarariib, ʃurrabaat*/ a tassel. ‖*ʃurraabit xurg* (1) saddle tassel. (2) person of no consequence, nonentity.
مشرّب *miʃarrab* /adj/ decorated with tassels.

ش ر ب [3]
شرّب *ʃarrab*[2] /vt/ *[carp]* to plane (wood). ‖*ʃaarit taʃriib* smoothing plane. - vn *taʃriib*; ava/pva *miʃarrab*.
اتشرّب *ʕitʃarrab*[2] or *ʕiʃʃarrab*[2] /vi/ *[carp]* to be planed. - iva *mitʃarrab*.

ش ر ب [4]
شارب *ʃaarib* /n pl *ʃawaarib*/ moustache.

ش ر ب [5] see ش ر ا ب : *ʃuraab*[1], *ʃaraab*[1]

ش ر ب ا ت see also ش ر ب [1]
شربات *ʃarbaat* /fem n/ **1** fruit or rose-flavoured syrup, drink made of diluted syrup. ‖*damm-u ʃarbaat* he is sweet-natured. - *ʕil-bint*[i] *di ʃarbaat* this girl is a honey! - *ɛahwa* (or *ʃaay) ʃarbaat* over-sweet coffee (or tea). **2** sugar syrup used in the preparation of various sweetmeats.
شرباتلى *ʃarbatli* /n pl *-yya*/ vendor of sweet drinks.

سر باتات *farbataat* /adj invar/ *[women, joc]* sweet, cute (especially of children).

ش ر ب ش see ش ر ب و ش : *farbuuf*

ش ر ب ك

شربك *farbik [slang]* **1** /vt/ to entangle, foul up, mix up. **2** /vi/ to become entangled, fouled or mixed up. *ʕil-xuṭuuṭ miʃarbika f-baɛḍ-a-ha* the lines are entangled with one another. - vn *farbaka*; ava/pva *miʃarbik*.

اتشربك *ʔitʃarbik* or *ʔiʃʃarbik* /vi/ *[slang]* to be or become entangled, fouled up or mixed up. - ava/iva *mitʃarbik*.

ش ر ب و ش

شربوش *farbuuf* <P *sar-posh*> /n pl *farabiif*/ hood for protecting the lit tobacco in a water-pipe.

ش ر ب و ن

ساربون *farboon* <Fr *charbon*> /n/ **1** carbon. **2** *[auto]* coke deposits (in an engine). **3** *[elec]* carbon-points (in a generator).

ش ر ت

شورت *furt* <Engl> **1** /n pl *-aat, -aat*/ shorts, short trousers. **2** /adj invar/ short (of clothes). *ɋamiiṣ furt* short-sleeved shirt. *banṭaloon furt* shorts. - also *furṭ*.

ش ر ج

شرج *faragˀ* /n/ anus.

شرجي *faragi* /adj/ anal. *ḫuɋna faragiyya* enema.

ش ر ح [1]

شرح *faraḫ [1] (a)* /vt/ to explain, elucidate. *faraḫ id-dars* he explained the lesson. || *ʕamr [1] yṭuul farḫ-u* a complicated matter. - vn *farḫ*; ava *faariḫ*; pva *maʃruuḫ*.

شرح *farḫ* **1** /prep, always w pron suff/ the same as. *ɋaṣṣar il-fustan-da xamsa santi wil-fustaan it-taani farḫu* shorten this dress five centimetres and the other one the same. **2** /n pl *furuuḫ*/ explanation.

سريحة *fariiḫaˀ* /n pl *faraayiḫ*/ **1** division, section. *fariiḫa ɋaribiyya* income or tax bracket. **2a** microscope slide. **2b** photographic slide. **3** slice (of meat etc.).

مشرحة *maʃraḫa* /n pl *maʃaariḫ*/ **1** mortuary, morgue. **2** autopsy room.

اتشرح *ʔitʃaraḫ [1]* or *ʔiʃʃaraḫ [1]* /vi/ to be explained, be elucidated. - iva *mitʃiriḫ*.

انشرح *ʔinʃaraḫ [1]* = *ʔitʃaraḫ [1]*. - vn *ʔinʃiraaḫ*; iva *minʃiriḫ*.

سرّح *farraḫ* /vt/ **1** to cut into slices, shreds or strips. **2** *[surg]* to dissect. - vn *tafriiḫ*; ava/pva *miʃarraḫ*.

اتشرّح *ʔitʃarraḫ* or *ʔiʃʃarraḫ* /vi/ **1** to be cut into slices, shreds or strips. **2** *[surg]* to be dissected. - iva *mitʃarraḫ*.

ش ر ح [2]

سرح *faraḫ [2] (i): faraḫ il-ɋalb* (or *is-sidr* or *ir-rooḫ*) to give pleasure, afford delight. *ɣuna s-sitt [1] ʕumm [1] kulsuum bi-yifriḫ il-ɋalb* Umm Kalthum's singing is a delight. - vn *faraḫaan*; ava *faariḫ*; pva *maʃruuḫ*.

شرح *firiḫ* /adj */ **1** open, breezy, comfortable, relaxing (of places). **2** friendly, pleasant (of people).

أشرح *ʔafraḫ* /el/ **1** more/most open, breezy (of places). **2** more/most pleasant (of people).

مسرح *muʃriḫ* /adj */: *muʃriḫ il-ɋalb* (or *is-sidr* or *ir-rooḫ*) pleasure-giving, delightful.

انسرح *ʔinʃaraḫ [2]* /vi/ passive of *faraḫ [2]*. - vn *ʔinʃiraaḫ*; iva *minʃiriḫ*.

اتشرح *ʔitʃaraḫ [2]* or *ʔiʃʃaraḫ [2]* = *ʔinʃaraḫ [2]*. - iva *mitʃiriḫ*.

ش ر خ

شرخ *farax, farax (u)* /vt/ to crack, make a crack in. *ɋizaaza maʃruuxa* a cracked bottle. - vn *farx, farx*; ava *faarix*; pva *maʃruux, maʃruux*.

سرخ *farx, farx* /n pl *furuux*/ crack, fissure.

اتشرخ *ʔitʃarax* or *ʔiʃʃarax* /vi/ to crack, be cracked. *ʕik-kubbaaya wiɋiɛit wi-ʃʃaraxit* the glass fell and cracked. - iva *mitʃirix*.

انسرخ *ʔinʃarax* = *ʔitʃarax*. - iva *minʃirix*.

شرّخ *farrax, farrax* **1** /vt/ to crack (a number of things or a number of times). *ʕiʃ-ʃams [1] farraxit il-buuya* the sun cracked the paint. **2** /vi/ to crack, become cracked. *ʕil-ʕarḍ [1] niffit wi-farraxit* the earth became dry and cracked. - vn *tafriix*; ava/pva *miʃarrax*.

اتسرّخ *ʔitʃarrax* or *ʔiʃʃarrax* /vi/ to crack, be or become cracked. - ava/iva *mitʃarrax*.

ش ر د [1]

سرد *farad (u, i)* /vi/ **1** to make an escape, slip away. *ʃarad minni fiz-zaḫma* he managed to escape me in the crowd. *ʕin-noom ʃarad min ɛiyuun-i* sleep fled from my eyes. **2** to become absent-minded, go wool-gathering. - vn *furuud, faradaan*; ava *faarid*.

سرّد *farrad* /vt/ to disperse, displace, render homeless. *ʕil-ḫarb [1] farradit naas kitiir* the war made many people homeless. - vn *tafriid*; ava/pva *miʃarrad*.

اتسرّد *ʔitʃarrad* or *ʔiʃʃarrad* /vi/ to be rendered homeless, become a vagrant. - vn *tafarrud*; ava/iva *mitʃarrad, mutaʃarrid*.

متشرّد *mutaʃarrid* /adj */ loutish and uncouth, yobbish.

ش ر د [2]
سردت *ʃaradit (i)* /vi/ it was hot and oppressive (of weather). *ʃid-dinya ʃaradit ɋawi ʃimbaariḥ* it was awfully hot and stuffy yesterday. - vn *ʃard*; ava *ʃaarid*.
شرد *ʃard* /n/ hot and oppressive breeze, stifling heat.
شردة *ʃarda* = *ʃard*. *ɛizz if-ʃarda* the peak of the midday heat.

ش ر د ح
سردح *ʃardaḥ* /vt/ to abuse in a vulgar or common fashion. - vn *ʃardaḥa*; ava *miʃardaḥ*.
شردوح *ʃarduuḥ* /adj pl *ʃaradiiḥ*/ low-class, foul-mouthed (usually of a woman). - also *ʃarfuuḥ*.
اتشردح *ʔitʃardaḥ* or *ʔiʃʃardaḥ* /vi/ to break into vulgar and foul-mouthed abuse. - ava *mitʃardaḥ*.

ش ر د م
شردم *ʃardim* /vt/ *[slang]* to treat roughly. - vn *ʃardama*; ava/pva *miʃardim*.
اتشردم *ʔitʃardim* or *ʔiʃʃardim* /vi/ *[slang]* to be roughly treated. - iva *mitʃardim*.

ش ر ر [1]
سرّ *ʃarr [1] (u)* /vi/ to drip, dribble. *ʔil-ḥanafiyya bi-tʃurr* the tap leaks. *ʔana ʃaarir ɛaraɋ* I'm dripping with perspiration. - vn *ʃarr, ʃararaan*; ava *ʃaarir, ʃaarir*.

ش ر ر [2]
سرّ *ʃarr* [2] /n/ **1** /pl *ʃuruur*/ evil, wickedness. *kaf-alla ʃ-ʃarr* may God ward off evil! *yikfii-na ʃarr il-...* may God protect us from .... *min ɣeer ʃarr* in safety, without mishap, as in *ʔin ʃa-lla kida min ɣeer ʃarr[i] tsaafir wi-tirgaɛ lina ɋawaam* God willing you will go away and come back safely. *kaafi xeer-u ʃarr-u* he is humble, unassuming or living modestly. *la minn(ak) wala kfaayit ʃarr-(ak)* if (you're) useless (you) needn't be positively harmful as well! *ʔif-ʃarr[i] barra wi-bɛiid* ≈ may evil be remote! *(ʔalf[i]) biɛd if-ʃarr[a] ɛaleek* (or *ɛannak*) ≈ may you be protected from evil (a thousand times over)! *xad if-ʃarr[i] w-raaḥ* ≈ never mind, it's nothing (said to one responsible for a minor accident, such as breakage, spillage etc.). **2** /in constr/ worst. *ɖarab-ni ʃarr[i] ɖarba* he hit me with the worst of blows.
سرّاني *ʃarraani* /adj */ vicious, spiteful, wicked, evil. *ɛeen ʃarraniyya* evil eye.
سرّير *ʃirriir* **1** /adj * and pl *ʃaʃraar*/ evil, villainous. *ʔarwaaḥ ʃirriira* evil spirits. **2** /n/ villain (e.g., in a story).

ش ر ر [3] see also ج ر ر
استرّ *ʔiʃtarr* /vi/ to ruminate, chew the cud. ‖ *ʔinta bi-tɋuul ya ʃarr iʃtarr* are you trying to pick a fight? - iva *miʃtarr*.
استرارة *ʔiʃtiraara* /n/ chewing the cud.

ش ر ر [4]
سرار *ʃaraar* /coll n/ spark(s). *ɛeen-u bi-tɫuɋɋ[i] ʃaraar* his eyes gleam (with anger). ‖ *ʃaraar ʔalmaaz* diamond chips.
سرارة *ʃaraara* /unit n, pl *-aat*/ a spark.

(ش ر ز)
سرز *ʃarz* <Fr> /n/ *[elec]* charge. *ʔil-baṭṭariyya ma-f-haa-ʃ ʃarz* the battery is dead.
شرز *ʃirz* <Engl> /n/ jersey, sweater. - also *jirs*.
سرز *ʃiriz* /adj */ vicious. - also *ʃaris*.

ش ر س
سرس *ʃarisˁ* /adj */ vicious, ferocious. *mugrim ʃaris* vicious criminal. - also *ʃiriz*.
سراسة *ʃaraasa* /n/ viciousness, ferocity.

ش ر ش [1]
سرش *ʃaraʃ (i)* **1** /vt/ to pour brine over (vegetables for pickling). **2** /vi/ to produce whey (of milk). - ava *ʃaarif*; pva *maʃruuf*.
سرش *ʃirf[1]* /n/ **1** whey. **2** pickling-brine.
سرّاسة *ʃarraaʃa* /n pl *-aat*/ dish for whey.
اتشرش *ʔitʃaraʃ* or *ʔiʃʃaraʃ* /vi/ to be covered with brine. - iva *mitʃiriʃ*.

ش ر ش [2]
شرس *ʃirf* [2] /n pl *ʃuruuf, ʃiraaf, ʃurúfa*/ bundle, bunch (e.g., of carrots, turnips or onions).
سرّش *ʃarraf* /vt/ to make (e.g., carrots, turnips or onions) into bundles. - vn *taʃriif*; ava/pva *miʃarraf*.
اتسرّش *ʔitʃarraf* or *ʔiʃʃarraf* /vi/ to be made into bundles (of, e.g., carrots, turnips or onions). - iva *mitʃarraf*.

ش ر ش [3] see ش ر ش ى : *ʃirfi, ʃirfaaya*

ش ر ش ب
سرسب *ʃarfib* **1** /vt/ to fringe, put a fringe on. *ʃaal miʃarfib* fringed shawl. **2** /vi/ to drip, trickle. *ʔid-damm[i] kaan bi-yʃarfib mig-garḥ* blood was dripping from the wound. - vn *ʃarfaba*; ava/pva *miʃarfib*.
سرسوبة *ʃarfuuba* /n pl *ʃarafiib*/ strand of a fringe. ‖ *ʔil-mayya nazla ʃarafiib ʃarafiib* the water is falling in an irregular trickle.
اتسرسب *ʔitʃarfib* or *ʔiʃʃarfib* /vi/ to be fringed. - iva *mitʃarfib*.

ش ر ش ح see ش ر ش و ح : *ʃarʃuuḥ*

ش ر ش خ

شرشخ *ʃarʃax* /vi/ to grate, make a grating sound. - vn *ʃarʃaxa*; ava *miʃarʃax*.

ش ر ش ر [1]

شرشر *ʃarʃar*[1] /vt/ to serrate. ‖*maqaṣṣ' mʃarʃar* (1) pinking shears. (2) thinning scissors. - vn *ʃarʃara*; ava/pva *miʃarʃar*.

شرشرة *ʃarʃara* /n pl *-aat, ʃaraaʃir*/ serrated sickle.

اتشرشر *ʔitʃarʃar* or *ʔiʃʃarʃar* /vi/ to be serrated. - iva *mitʃarʃar*.

ش ر ش ر [2]

شرشر *ʃarʃar*[2] /vi/ to drip, trickle. *ʔil-mayya ʃarʃarit min il-ḥanafiyya* the water dripped from the tap. - vn *ʃarʃara*; ava *miʃarʃar*.

ش ر ش ر [3]

شرشر *ʃarʃar*[3] /prop n/ name of a character in an elementary reading book. ‖*ṭariiqit ʃarʃar* method of teaching reading word by word, rather than alphabetically.

ش ر ش و ح

شرشوح *ʃarʃuuḥ* /adj pl *ʃaraʃiiḥ*/ low-class, foul-mouthed (usually of a woman). - also *ʃarduuḥ*.

ش ر ش ى

شرشى *ʃirʃi* /coll n/ pieces of plastic used in inlay work.

شرشاية *ʃirʃaaya* /unit n, pl *-aat*/ a piece of plastic used in inlay work.

ش ر ط [1]

شرط *ʃaraṭ*[1] *(u)* /vt/ to make an incision in, slit (open). *ʃaraṭ baṭn is-samaka* he slit open the belly of the fish. - vn *ʃarṭ*; ava *ʃaariṭ*; pva *maʃruuṭ*.

شرط *ʃarṭ*[1] /n pl *ʃuruuṭ*/ incision, slit, slash. *geeb-ak fii ʃarṭ* there is a slit in your pocket.

شرطة *ʃarṭa* /n/ **1** /inst n, pl *-aat*/ a slashing, a slitting. — /pl *-aat, ʃuraṭ*/ **2** incision, slash. **3a** slash, oblique, shilling-stroke. *ʔutubiis bi-ʃarṭa* bus with a diagonal stroke through the route number (indicating a variation in the route). **3b** hyphen.

شريط *ʃiriiṭ* /n/ **1** /pl *ʔaʃriṭa, ʃaraayiṭ, ʃirṭaan*/ tape, band, strip, ribbon. *ʃiriiṭ tasgiil* recording-tape. *ʃiriiṭ lamba* lamp wick. *ʃiriiṭ tangiid* ruffle tape (for curtains). *ʃiriiṭ (manɛ il-ḥaml)* intra-uterine device. *ʃiriiṭ liḥaam [elec]* insulating tape. **2** /pl *ʃaraayiṭ*/ stripe of rank (in the police or armed forces). **3** /pl *ʃaraayiṭ, ʃirṭaan*/ **3a** track (of a railway or tramway). **3b** (conveyor) belt.

شريطة *ʃiriiṭa* /n pl *ʃaraayiṭ, ʃariṭaat*/ **1** piece of ribbon. **2** stripe of rank (in the police or armed forces). *xad ʃiriiṭa* he got promoted (in the non-commissioned ranks).

شريطى *ʃiriiṭi: duud ʃiriiṭi* tape-worm(s).

شرّاط *ʃarraaṭ* /n */ cut-purse, pickpocket.

مشرط *miʃraṭ* /n pl *miʃaariṭ*/ scalpel, lancet.

اتشرط *ʔitʃaraṭ*[1] or *ʔiʃʃaraṭ*[1] /vi/ to be slit (open). - iva *mitʃiriṭ*.

انشرط *ʔinʃaraṭ* = *ʔitʃaraṭ*[1]. - iva *minʃiriṭ*.

شرّط *ʃarraṭ*[1] /vt/ to cut, slit (a number of times or in a number of places), scarify. *fis-sudaan bi-yʃarraṭu wiff-u-hum* in the Sudan they slash their faces (for tribal marking). - vn *tafriiṭ*; ava/pva *miʃarraṭ*.

اتشرّط *ʔitʃarraṭ*[1] or *ʔiʃʃarraṭ*[1] /vi/ to be cut or slit (a number of times or in a number of places). - iva *mitʃarraṭ*.

ش ر ط [2]

شرط *ʃaraṭ*[2] *(u)* /vt/ to stipulate, demand, require. *ʃaraṭ' ɛalee ʔinnu yirgaɛ badri* I made it a condition that he come back early. - vn *ʃarṭ*; ava *ʃaariṭ*; pva *maʃruuṭ*.

شرط *ʃarṭ*[2] /n pl *ʃuruuṭ*/ condition, stipulation. *ɛala* (or *li-* or *bi-*) *ʃarṭ' ʔinn...* on condition that .....‖*miʃ ʃarṭ* not necessarily. *-ʃuruuṭ ṣiḥḥiyya* health standards. - *ʔilli ʔawwil-u ʃarṭ' ʔaxr-u nuur* (or *salaam*) *[prov]* ≈ a prior stipulation leads to a happy outcome. *-ʃarṭ' gazaaʔi* penalty clause (in a contract).

اتشرط *ʔitʃaraṭ*[2] or *ʔiʃʃaraṭ*[2] /vi/ to be stipulated, be imposed (of a condition). - iva *mitʃiriṭ*.

شرّط *ʃarraṭ*[2] = *ʃaraṭ*[2]. - ava *miʃarraṭ*.

اتشرّط *ʔitʃarraṭ*[2] or *ʔiʃʃarraṭ*[2] /vi/ to make (demanding) conditions. - iva *mitʃarraṭ*.

اشترط *ʔiʃtaraṭ* /vt/ to stipulate, demand, require. *ʔiʃtaraṭu ɛalayya ʔinni ʔasiib ʔiṭalya* they made it a condition that I leave Italy. - vn *ʔiʃtiraaṭ*; ava *miʃtiriṭ*. ¶ *yuʃtaraṭ* it is a necessary condition. *ma-yuʃtaraṭ-ʃ* not necessarily.

اشتراط *ʔiʃtiraaṭ* /n pl *-aat*/ stipulation.

ش ر ط [3]

شورط *ʃurṭ* <Engl> **1** /n pl *-aat*/ shorts, short trousers. **2** /adj invar/ short (of clothes). *ɋamiiṣ ʃurṭ* short-sleeved shirt. *banṭaloon ʃurṭ* shorts. - also *ʃurt*.

شرطة *ʃurṭa* /n/ police. *ʔiʃ-ʃurṭa l-ɛaskariyya* the Military Police.

ش ر ع

شرع *faraʕ↑ (a)* /vi/ to set out, begin, undertake (to do s.th.). *furuuʕ fi-ɋatl* intent to kill. - vn *furuuʕ*; ava *faariʕ*; pva *mafruuʕ*.

شارع *faariʕ* /n pl *fawaariʕ*/ street. ‖ *xalla ... fawaariʕ* to make a mess of, as in *ʕaxalli wiff-ak fawaariʕ* I'll cut roads in your face! *ħa-nxalli dfaʕ-hum fawaariʕ* we'll make a mess of their defence!

شوارعي *fawarʕi* /n pl *-yya*/ street urchin.

مشروع *mafruuʕ* /n pl *mafariiʕ*/ project, plan.

شرع *farʕ* /n/ *[Isl]* canon law. ‖ *fi-farʕ' miin* ≈ in whose book? says who?

شرعي *farʕi* /adj/ **1** legal (particularly in terms of Islamic law). *sinn' farʕi* (legal) majority. *warasa farʕiyyiin* legitimate heirs. **2** pertaining to Islamic law.

شراع *firaaʕ, furaaʕ* /n pl *ʕifriʕa, firíʕa*/ sail.

شراعي *firaaʕi, furaaʕi* /adj/ **1** pertaining to sails. ‖ *ʈayyaara firaʕiyya* glider. **2** pertaining to gliding.

شريعة *fariiʕa* /n/ *[Isl]* canon law.

شرّاعة *firraaʕa* or *furraaʕa* /n/ **1** window in or over a door. **2** automatic platen press.

شرّع *farraʕ* /vt/ to legislate. - vn *tafriiʕ*; ava *mifarriʕ*; pva *mufarraʕ*.

تشريعي *tafriiʕi* /adj/ legislative, pertaining to law. *ʕiṣ-ṣulṭa t-tafriʕiyya* the legislative body.

مشرّع *mufarriʕ* /n */ legislator.

ش ر ف

شرف *faraf* /n/ honour. *ħaras faraf* guard of honour. *bi-faraf-ak* really? on your honour? *wi-faraf-i l-amawwit-u* by my honour, I'll kill him!

شرفة *farafa* /n pl *-aat*/ **1** ornamental cornice (e.g., round the roof of a mosque). **2** frieze design in tent appliqué work used on screens at the entrance to a marquee (see Pl.H, 25).

شريف *fariif* **1** (also *firíif*) /adj pl *furafa, ʕafraaf*/ honourable, noble, virtuous, honest. ‖ *ʕil-xatma f-fariifa* the Holy Koran. **2** /n pl *ʕafraaf* only/ descendant of the Prophet Muhammad.

أشرف *ʕafraf¹* /el/ more/most honourable etc.

مشرفيّة *mafrafiyya* /n/ **1** projecting balcony enclosed by lattice-like wooden screens. **2** *[carp]* technique involving the turning of wood in certain traditional patterns resulting in a complex lattice-work effect (originally applied only to the screens of the projecting balcony - see Pl.G).

شرّف *farraf* **1** /vt/ to honour (in particular with one's presence). *ma-ʈfarraf bet-na* won't you please give us the honour of a visit! *farraftuu-na* you've honoured us (formula of leave-taking uttered by the host to his guests, who respond with the formula *ʕallaah yifarraf miɋdaar-ak*). **2** /vi/ to bestow honour with one's presence. *farraftu ʕimta* when did you arrive? - also used sarcastically, as in *farraf yifrab faay maʕaana* his High-and-Mightiness deigned to drink tea with us. - vn *tafriif*; ava *mifarraf*.

تشريفة *tafriifa* /n pl *-aat*/ **1** *[obsol]* ceremonial dress, court-dress, full-dress (uniform). **2** guard of honour.

تشريفاتي *tafrifaati* /n pl *-yya*/ *[admin]* official responsible for receiving important visitors, master of ceremonies, chamberlain.

اتشرّف *ʕitfarraf* or *ʕiffarraf* /vi/ to be honoured. - iva *mitfarraf*.

تشرّف *tafarraf: tafarrafna* response to an introduction ≈ very honoured to meet you.

أشرف *ʕafraf²* /vi/ to have supervision, be in charge. *ħa-yibɋa mufrif ʕala l-ʕummaal* he will be in charge of the workers. - vn *ʕifraaf*; ava *mufrif*.

إشراف *ʕifraaf* /n/ supervision.

إشرافي *ʕifraafi* /adj/ supervisory.

مشرف *mufrif* /n */ superintendent. *mufrif ʕigtimaaʕi* social counsellor in a school.

ش ر ق [1]

شرق *firíɋ, faraɋ' (a)* /vi/ **1** to choke. *ʕandu ʃalal fil-balʕuum wi-law firib yifraɋ* he has paralysis in the oesophagus and if he drinks he chokes. **2** to flood, be choked (of an engine). - vn *faraɋ, faraɋaan*; ava *faariɋ*.

شرّق *farraɋ'* **1** /vt/ to cause to choke. **2** /vi/ to be flooded, be choked (of an engine. - vn *tafriiɋ*; ava *mifarraɋ*.

اتشرّق *ʕitfarraɋ'* or *ʕiffarraɋ'* /vi/ to be choked, be flooded (of an engine). - iva *mitfarraɋ*.

ش ر ق [2]

شرقان *farɋaan* /adj/ parched.

شراقي *faraaɋi* <Copt> /adj/ unirrigated, parched (of land).

سرّق *farraɋ²* /vi/ to become parched or dry. *ʕil-ʕarḍ' farraɋit* the land dried up. - vn *tafriiɋ*; ava *mifarraɋ*.

اتشرّق *ʕitfarraɋ²* or *ʕiffarraɋ²* /vi/ to become parched or dry. - iva *mitfarraɋ*.

ش ر ق [3]

شرق *faraɋ² (u, i)* /vi/ to rise (of the sun). - vn *furuuɋ*; ava *faariɋ*.

شرق *farɋ* /n/ east. ‖ *ʕaɋul-lak if-farɋ' tɋuul il-ɤarb [prov]* ≈ you and I are always at loggerheads with one another.

شرقي *farɋi* /adj */ eastern. *dirasaat farɋiyya* oriental

studies. ‖*raqṣ ʃarqi* belly-dancing. -*ħuqna ʃarqiyya*↓ enema (corruption of *ʃaragiyya*).

الشرقيّة *ʃiʃ-ʃarqiyya* /prop n/ Sharqiya, province in the north-east of the Delta.

شرقاوى *ʃarqaawi* /pl *ʃaraqwa*/ **1** /adj/ of, or pertaining to, the province of Sharqiya. **2** /n/ one from Sharqiya.

مشرق *maʃriq* /n pl *maʃaariq*/ east. *ʃil-maʃaariq wil-maɣaarib* the corners of the earth.

شرّق *ʃarraq*[3] /vi/ to go eastward. ‖*tiʃarraq tiɣarrab* wherever you go, as in *tiʃarraq tiɣarrab laazim tidfaɛ* whatever you do or say you will have to pay. - vn *taʃriiq*; ava *miʃarraq*.

مستشرق *mustaʃriq, mustaʃriq* /n */ orientalist.

ش ر ق[4] see ش ر ا ق : *ʃiraaq*

ش ر ق[5] see ش ر و ق : *ʃaruuqa*

ش ر ك[1]

سرك *ʃarak*[1] *(i)* /vt/ to involve. *ħa-yiʃrikuu-k fit-tuhma* they will drag you into the charge (as an accomplice). - vn *ʃarakaan*; ava *ʃaarik*; pva *maʃruuk*.

سرك *ʃirk* /n/ **1** partnership. *ɣaar iʃ-ʃirk* ≈ partnership spells trouble. **2** *[Isl]* polytheism, attribution of partners to God. — /adj invar/ **3** jointly owned. *ɛimaara ʃirk* a jointly owned apartment building.

سركة *ʃirka* **1** /n pl *-aat, ʃarikaat*↑, *ʃirak*↓/ business, company, firm. **2** /adj invar/ shared, jointly owned.

سرك *ʃarak*[2] /n pl *ʃiraak*/ trap.

سركة *ʃarika* /n/ **1** = *ʃirka*. **2** community, communion. *ħayaat iʃ-ʃarika* communal living.

سريك *ʃiriik* /n pl *ʃuraka*/ **1** partner, associate. ‖*raagil zayy ʃiʃ-ʃiriik il-mixaalif* an argumentative man. - *ʃiʃ-ʃiriik il-mixaalif ʃixsar wi-xassar-u [prov]* cause a contrary partner to lose, even if you yourself thereby lose. **2** accomplice.

سريكة *ʃiriika* /n pl *-aat*/ female partner. *ʃiriikit ħayaat-i* my wife.

اتسرك *ʃitʃarak* or *ʃiʃʃarak* /vi/ passive of *ʃarak*. - iva *mitʃirik*.

انسرك *ʃinʃarak* = *ʃitʃarak*. - iva *minʃirik*.

شارك *ʃaarik* **1** /vt/ to participate with. *ʃaʃark-ak fil-maʃruuɛ* I'll join you in the project. ‖*ɛayza tʃarik-ni f-ħayaat-i* she wants to interfere in my life. **2** /vi/ to take part. *laazim niʃaarik fil-maghuud da* we must participate in this effort. - vn *miʃarka, muʃarka*; ava *miʃaarik*.

اتشارك *ʃitʃaarik* or *ʃiʃʃaarik* /vi/ **1** to take a share. *ɛaawiz yitʃaarik fil-ʃataawa* he wants a share of the protection money. **2** to go into partnership (in business). **3** to be joined into partnership. - ava/iva *mitʃaarik*.

أشرك *ʃaʃrak*↑ **1** /vt/ to involve. **2** /vi/ *[Isl]* to attribute partners to God. - vn *ʃiʃraak*; ava *muʃrik*.

إشراك *ʃiʃraak* /n/ *[Isl]* polytheism, attribution of partners to God.

اشترك *ʃiʃtarak* /vi/ **1a** to participate. **1b** to become a member. *ʃana miʃtirik fi-naadi g-giziira* I'm a member of the Guezira Club. **2** to become a subscriber. **3** to hold in common. *ʃii ħagaat kitiir bi-yiʃtirku fiiha* they have a lot in common. - vn *ʃiʃtiraak*; ava *miʃtirik*; pva *muʃtarak*.

اشتراك *ʃiʃtiraak* /n pl *-aat*/ **1** participation. *bi-ʃtiraak maɛa* in combination with. **2** membership. **3** subscription. *ʃiʃtiraak il-ɋaṭr* season ticket for the train.

اشتراكى *ʃiʃtiraaki* **1** /adj */ socialist, socialistic. *ʃil-ittiħaad l-iʃtiraaki* the Socialist Union. **2** /n */ person holding socialist beliefs, socialist.

الاشتراكيّة *ʃil-ʃiʃtirakiyya* /n/ socialism.

مشترك *muʃtarak* **1** /adj/ common, shared. ‖*ɋaasim muʃtarak [math]* lowest common denominator. - *ɛaamil muʃtarak [math]* common factor. **2** /n pl *-aat*/ **2a** *[plumb]* joint. **2b** *[elec]* multi-plug socket, adaptor. **2c** *[auto]* dual exhaust-pipe.

ش ر ك[2]

شرك *ʃuruk* <T *çürük*> /adj invar/ unfit, unsound (particularly with respect to military service). *ɛarabiyya ʃuruk* an unsound car. ‖*filuus ʃuruk* counterfeit money.

شرّك *ʃarrak* /vt/ **1** to render unsound or useless. **2** to reject as medically unfit for military service. - vn *taʃriik*; ava/pva *miʃarrak*.

اتشرّك *ʃitʃarrak* or *ʃiʃʃarrak* /vi/ passive of *ʃarrak*. - iva *mitʃarrak*.

ش ر ك[3] see ش ر ى ك : *ʃureek, ʃureeka*

ش ر ك س

شركسى *ʃarkasi* **1** /adj/ Circassian. ‖*ʃarxa ʃarkasi* variety of chicken characterized by a bald neck. **2** /n pl *ʃaraksa, ʃarkas*/ a Circassian.

شركسيّة *ʃarkasiyya* /n/ dish of poultry cooked in a sauce containing nuts, and served with rice.

ش ر ك س –

شركسكين *ʃarkiskiin* <Engl> /n/ shark-skin cloth.

ش ر م[1]

شرم *ʃaram (u)* /vt/ to tear, split, slit. *ʃaram*

ig-gallabiyya fiz-zaḥma he tore his galabiya in the crowd. - vn *farm*; ava *faarim*; pva *mafruum*.

سرم *farm* /n pl *furuum*/ inlet, bay.

أشرم *ʔafram* /adj, fem *farma*, pl *furm*/ harelipped.

اتسرم *ʔitfaram* or *ʔiffaram* /vi/ to tear or be torn, split or be split. *barwiz iṣ-ṣuura ɛafaan ma-tiffaram-ʃ* frame the picture so it won't get torn. - ava/iva *mitfirim*.

انشرم *ʔinfaram* = *ʔitfaram*. - ava/iva *minfirim*.

ش ر م ²

سرم *furum: furum burum* (1) mess, chaos, as in *ʔid-dunya furum burum* life is a sorry mess. (2) nonce phrase used in spells ≈ abracadabra.

ش ر م ط

شرمط *farmaṭ* /vt/ to shred, tear to shreds. - vn *farmaṭa*; ava/pva *mifarmaṭ*.

سرمطه *farmaṭa* /n/ impertinence, rudeness. *balaaf farmaṭa* don't be so bloody rude.

شرموط *farmuuṭ* /adj pl *faramiiṭ*/ impertinent, rude, foul-mouthed.

سرموطه *farmuuṭa* /n pl *faramiiṭ*/ **1** cloth, rag. **2** harlot, whore. *ya-bn if-farmuuṭa* son of a whore! *farmuuṭa middariyya wala ḫurra mbahraga [prov]* better a modest prostitute than a tarted-up lady.

اتشرمط *ʔitfarmaṭ* or *ʔiffarmaṭ* /vi/ **1** to be torn to shreds. **2** to be or become impertinent, rude or sharp-tongued. - ava/iva *mitfarmaṭ*.

ش ر ن ق

سرنق *farnaq* /vi/ to produce a cocoon (of silkworms). - vn *farnaqa*; ava *mifarnaq*.

سرنقه *farnaqa* /n pl *faraaniq*/ cocoon.

ش ر ه

سره *farih* /adj */ gluttonous, greedy.

سراهة *faraaha* /n/ gluttony, greed. *ʔamma-nta farih faraaha* what a glutton you are!

ش ر و see ش ر ى : *farwa, farwa, muftarawaat*

ش ر و ا ل see س ر و ل : *firwaal*

ش ر و ق see also ش و ر ق

سروقة *faruuqa* /n/ hot air flue between fire and baking chamber of a mud oven (see Pl.C, 11).

ش ر ى ¹

سروة *farwa, farwa* /n pl *-aat, -aat, firaw*/ buy, purchase, deal.

شرا، سراء *fira* /vn/ buying, purchasing. *ʔil-beeɛ wif-fira* buying and selling. ‖*fira l-ɛabd' wala tarbiit-u [prov]* (the cost of) buying a (trained) slave is preferable to (the trouble of) training him ≈ sometimes it's more economical to buy the finished article.

شراية *firaaya* /vn/ buying, purchasing.

ساری *faari* **1** active verbal adjective of *ʔiftara*. *farii-ha b-filuus-u huwwa* he has bought it with his own money. ‖*hiyya mraat-i faryaa-ni* do you think my wife owns me! - *ʔana farii-k mahma ḫaṣal* no matter what happens, I'll stand by you. - *ʔilli farii-k yixdim-ak kiwayyis* he will serve you well who values you (i.e. enough to buy you). **2** /n */ buyer, purchaser.

انسری *ʔinfara* /vi/ to be bought. - iva *minfiri*.

اتسری *ʔitfara* or *ʔiffara* = *ʔinfara*. - iva *mitfiri*.

استری *ʔiftara* or *ʔiftara* /vt/ **1** to buy. *ʔiftareet-u b-sabɛa gneeh* I bought it for seven pounds. ‖*ʔiftiri ma-tbiɛ-ʃ [prov]* ≈ learn from other's confidences, but don't give away your own. - *xalla lli ma-yiftiri yitfarrag* to make a public spectacle (of oneself), make a scene. **2** to value dearly. *ʔana ma-b-ansaa-ʃ illi miftirii-ni* I don't forget those who care for me. ‖*ʔiftareet ʔislaam-i* ≈ I behaved in a gentlemanly fashion. - ava *miftiri, faari*.

مشتری *muftari* /n */ buyer, customer.

المشتری *ʔil-muftari* /prop n/ *[astron]* Jupiter.

مشتروات *muftarawaat* /pl n/ purchases.

مسترایات *muftarayaat* /pl n/ purchases. *qism il-muftarayaat* (or *ʔil-muftarawaat*) purchasing department.

ش ر ى ²

سریان *furyaan↑* or *firyaan↑* /n pl *farayiin*/ artery.

سریانی *furyaani↑* or *firyaani↑* /adj/ arterial.

ش ر ى ا

شریة *furya* <Copt> /n pl *-aat*/ *[Chr]* censer, thurible.

ش ر ى ك

سریك *fureek* <T *çörek*> /coll n/ type of bun.

سریكة *fureeka* /pl *-aat*/ unit noun of *fureek*.

ش ز ز

شذ *fazz (i)* /vi/ to deviate, be an exception. *ʔifmiɛna ʔinta tfizz" ɛan kull in-naas* why should it be you who are different from everybody? - vn *fuzuuz*; ava *faaziz, faazz↑*.

شذوذ *fuzuuz* /n/ perversion, deviation. *fuzuuz ginsi* sexual perversion (specifically homosexuality).

شواذ *fawaazz* /pl n/ perverts.

ش ز ل
الشاذلّيّة ʃif-fazliyya /prop n/ Sufi order founded by Abu l-Hasan el-Shadhili.

ش ز ل ن ج
شيزلونج fizlung or fazlung <Fr> /n pl -aat/ chaise-longue.

ش ز و
شذا faza /n/ smell, aroma, fragrance.

ش س ع
شاسع faasiɛ /adj/ huge, vast (usually of distance). farq' faasiɛ a tremendous difference.

ش س ي ه
شاسيه faseeh <Fr chassis> /n pl -aat/ 1 chassis, frame. bi-nishab il-mutoor min if-faseeh we strip the motor from the frame. 2 *[phot]* wooden film-cassette (for a studio camera).

ش ش خ ن
ششخن faʃxan <P shash-khâna> /vt/ to rifle (a gun barrel). - vn faʃxana; ava/pva miʃaʃxan.
اتششخن ʔitfaʃxan or ʔiffaʃxan /vi/ passive of faʃxan. - iva mitfaʃxan.

ش ش ف ي see ش ف ي : muʃtaffa, miʃtaffa

(ش ش م)
ششم fiʃm <P chashm> /n/ Indian liquorice (Abrus precatorius), a shrub bearing seeds which are powdered and were formerly used as a medicine for inflamed eyes. ‖ħuʈʈ' f-ɛeen-ak fiwayyit fiʃm have some consideration.
ششمة fiʃma <T çişme> /n/ *[rur]* outhouse, outside lavatory.

ش ش ن
سشنى fiʃni <T çeşni> /n/ random checking, sampling. ɛamal fiʃni ɛala fuʏl-i-na he spot-checked our work.
ششنجى fiʃingi /n pl -yya/ *[obsol]* appraiser, assayer.

ش ش ي
شاشى faaʃa² /vi/ to flutter, wave in the wind. ‖ɢalb-i bi-yfaaʃi ɛalee I have a longing for it. - vn miʃaʃiyya; ava miʃaaʃi.

ش ض ب
شضب faḍḍab /vt/ to lacerate, slash. faḍḍabuu-lu wiff-u they cut his face about. - vn taʃḍiib; ava/pva miʃaḍḍab.
اتشضب ʔitfaḍḍab or ʔiffaḍḍab /vi/ to be lacerated, be slashed. - iva mitfaḍḍab.

ش ض ل
شضلى fuḍali /n pl -yya/ quarrelsome or fractious person, bully.

ش ض ي see also ش ظ ي
شظية faḍya (also faṭya) /n pl -aat, fuḍay/ splinter, sliver.

ش ط ب
شطب faṭab (u) /vt/ to cross off, strike out, cancel. ʔuʃtub ism-i min il-ɢayma cross my name off the list. - vn faṭb; ava faaṭib; pva maʃtuub.
شطب faṭb /n/ *[comm]* control of payment. ɢism if-faṭb or ɢalam if-faṭb Control of Settlement section.
اتشطب ʔitfaṭab or ʔiffaṭab /vi/ to be crossed off, be struck out, be cancelled. - iva mitfiṭib.
انشطب ʔinfaṭab = ʔitfaṭab. - iva minfiṭib.
شطّب faṭṭab /vt/ 1 to finish off, finish work on. faṭṭabi l-maṭbax ɢabl' ma timfi tidy up the kitchen before you go! faaḍil taʃtiib il-mawaɛiin bass all that remains is to clear away the pots and pans. 2 *[constr]* to fit out, put the finishing touches to (a building). mistaniyyiin ɛal-ɢifaani wil-ʔadawaat bitaaɛit il-ḥammaam ɛaʃaan nifaṭṭab il-beet we're waiting for the tiles and the bathroom fixtures so we can put the finishing touches to the house. 3 to cross off repeatedly. faṭṭab il-maqaala kull-a-ha he blue-pencilled the article down to practically nothing. ‖ḍarabt-u faṭṭabt-i-lu wiff-u I beat his face to pulp. – /vi/ 4 to finish work, knock off, shut up shop. faṭṭabtu walla mumkin ʔaṭlub ɛaṣiir lamuun are you closing or may I order a lemonade? - vn taʃtiib; ava/pva mifaṭṭab.
¶faṭṭab ɛala to dispose of thoroughly. faṭṭab ɛal-ʔakl he polished off the food. faṭṭab ɛal-filuus he spent the money to the last penny. ‖faṭṭabu ɛal-ɢahwa they wrecked the café (causing it to close).
تشطيب taʃtiib /n pl -aat, tafaṭiib/ *[constr]* finish, finishing touch.
اتشطّب ʔitfaṭṭab or ʔiffaṭṭab /vi/ passive of faṭṭab. - iva mitfaṭṭab.

ش ط ب ي
الشاطبى ʔif-faṭbi /prop n/ beach and district in the eastern part of Alexandria.

ش ط ح
شطح faṭaḥ (a) /vi/ to veer, go off course. xayaal-i faṭaḥ

my thoughts strayed. ‖ *ʕik-kamangaati raaḥ ʃaaṭiḥ* the violinist went screeching out of tune. - *ʕawwil ma yiftaḥ yinṭaḥ* ≈ as soon as he takes a course (of action) he goes (too) far. - vn *ʃaṭḥ, ʃaṭaḥaan*; ava *ʃaaṭiḥ*.

ش ط ر [1]

شطر *ʃaṭar (a)* /vt/ to cut in half; bisect. - vn *ʃaṭr*; ava *ʃaaṭir*; pva *maʃṭuur*.

شطر *ʃaṭr* /n pl *ʃuṭuur, ʕaʃṭur*/ **1** half part. **2** hemistich.

شطرة *ʃaṭra = ʃaṭr*.

شطارة *ʃaṭaara* /n/ cleverness, skill, smartness. ‖ *ʕig-gary[i] nuṣṣ if-ʃaṭaara [prov]* ≈ valour would fight, but discretion would run away.

شاطر *ʃaaṭir[1]* /adj * and pl *ʃuṭṭaar*/ clever, smart, skilful. *ʕiʃ-ʃaṭra tiʁzil bi-rigl[i] ḥmaar [prov]* a clever woman can spin (even) with a donkey's leg. ‖ *ma-yṭubb[i] ʕilla f-ʃaaṭir* ≈ it happens to the best of us (phrase said to give consolation in misfortune). - *ya ʃaaṭir* form of address to a child.

أشطر *ʕaʃṭar* /el/ more/most clever, more/most skilful. ‖ *kaan ʁeer-ak ʕaʃṭar* ≈ what makes you think you can do it (when others cleverer than you have failed)?

شطّورة *ʃaṭṭuura* /n/ smart kid.

اتشطر *ʕitʃaṭar* or *ʕiʃʃaṭar* /vi/ **1** to be cut in two, be bisected. **2** to split, divide. - ava/iva *mitʃiṭir*.

انشطر *ʕinʃaṭar = ʕitʃaṭar*. - vn *ʕinʃiṭaar*; iva/ava *minʃiṭir*.

اتشطّر *ʕitʃaṭṭar* or *ʕiʃʃaṭṭar* /vi/ **1** to try to outwit, try to take advantage. *ma-titʃaṭṭar ɛala lli ɋadd-ak* pick on somebody your own size! **2a** to try to be clever. *ʕiyyaa-k baɋa tiʃʃaṭṭar fi-drast-ak* I hope, then, you'll try to do better in your studies. ‖ *ʕik-kalb[i] ma-yiʃʃaṭṭar-ʃ[i] ʕilla ɛala baab daar-u [prov]* ≈ every dog is a lion at home. **2b** to become clever. - ava *mitʃaṭṭar*.

شاطر *ʃaaṭir[2]* /vt/ to share with. *niʃaṭir-kum il-ʕaḥzaan* we share your grief (phrase of condolence used in telegrams). - vn *muʃaṭra*.

ش ط ر [2]

شاطور *ʃaṭuur* /n pl *ʃawaṭiir*/ meat cleaver. - also *saṭuur*.

ش ط ر ن ج

شطرنج *ʃaṭrang, ʃaṭarang* /n/ chess.

ش ط ط [1]

شطّ *ʃaṭṭ[1] (u)* **1** /vt/ to strike (a match). *ʃaṭṭeet ɛuud kibriit* I struck a match. **2** /vi/ to strike off course, veer away. *ɛaɋl-u bi-yʃuṭṭ* his mind wanders. ‖ *ʕinta bi-tʃuṭṭ[i] fil-kalaam* (1) you're indiscreet in what you say. (2) you're getting off the subject. - vn *ʃaṭaṭaan*; ava *ʃaaṭiṭ*; pva *maʃṭuuṭ*.

شطّاطة *ʃaṭṭaaṭa* /n pl *-aat*/ striking surface for matches. *ʃaṭṭaaṭit miʃṭ* striking surface of a book of matches.

اتشطّ *ʕitʃaṭṭ* or *ʕiʃʃaṭṭ* /vi/ to be struck (of matches). - iva *mitʃaṭṭ*.

ش ط ط [2]

شطّة *ʃaṭṭa* /n/ chili pepper (Capsicum conicum).

شطيطة *ʃiṭeeṭa* /n/ **1** hot peppery sauce. **2** bird pepper (Capsicum frutescens).

ش ط ط [3] ( )

شطّ *ʃaṭṭ[2]* /n pl *ʃuṭuuṭ*/ bank, shore. ‖ *lissa ɛala ʃ-ʃaṭṭ* ≈ still untried, not yet exposed to any stress.

شطّ *ʃaṭṭ[3]: ʃaṭṭ[a] ɛarabaan [mus]* mode in Arabic music beginning on G and having A flat, E flat, and F sharp.

ش ط ف [1]

شطف *ʃaṭaf[1] (u)* /vt/ to rinse, rinse off. *ʃaṭafit il-ʁasiil* she rinsed the laundry. - vn *ʃaṭf, ʃaṭafaan*; ava *ʃaaṭif*; pva *maʃṭuuf*.

شطّافة *ʃaṭṭaafa* /n pl *-aat*/ bidet attachment in a lavatory bowl.

اتشطف *ʕitʃaṭaf[1]* or *ʕiʃʃaṭaf[1]* /vi/ to be rinsed. - iva *mitʃiṭif*.

انشطف *ʕinʃaṭaf = ʕitʃaṭaf*. - iva *minʃiṭif*.

شطّف *ʃaṭṭaf* /vt/ to rinse off, rinse (a number of things, or a number of times). - vn *taʃṭiif*; ava/pva *miʃaṭṭaf*.

اتشطّف *ʕitʃaṭṭaf* or *ʕiʃʃaṭṭaf* /vi/ to rinse oneself off or be rinsed. - ava/iva *mitʃaṭṭaf*.

ش ط ف [2]

شطف *ʃaṭaf[2] (u)* /vt/ **1** *[carp, metal]* to bevel, make a chamfer on. ‖ *tawṣiil bi-ʃaṭf* scarfing. **2** to chip. - vn *ʃaṭf, ʃaṭafaan*; ava *ʃaaṭif*; pva *maʃṭuuf*.

شطف *ʃaṭf* /n pl *-aat*/ **1** *[carp, metal]* chamfer, bevel, bevelled edge. **2** chip.

شطفة *ʃaṭfa* /n pl *ʃuṭaf*/ chip.

شطفيّة *ʃaṭfiyya = ʃaṭfa*.

اتشطف *ʕitʃaṭaf[2]* or *ʕiʃʃaṭaf[2]* /vi/ **1** *[carp, metal]* to be bevelled. **2** to be chipped. - iva *mitʃiṭif*.

ش ط ن see ش ی ط ن : *ʃiṭaan, ʃiṭaani*

ش ط ی see ش ض ی : *ʃaṭya*

ش ظ ی see also ش ض ی

شظية *ʃaẓya* /n pl *ʃaẓaaya*/ piece of shrapnel.

شظيّة *ʃaẓiyya = ʃaẓya*.

ش ع ب [1]

سعب *ʃaɛb* /n pl *ʃuɛuub*/ **1** people, populace. *ʃif-ʃaɛb il-maṣri* the Egyptian people. **2** *[Chr]* congregation.

سعبى *ʃaɛbi* [1] /adj */ **1** folk, traditional. *ʃayaani ʃaɛbiyya* folk songs. **2** popular, of the mass of people. *masaakin ʃaɛbiyya* (government-subsidized) low-income housing developments. *lu nufuuz ʃaɛbi* he has grass-roots' support. *ɋumaaʃ ʃaɛbi* cheap cloth for popular consumption.

سعبى *ʃaɛbi* [2]*: nazla ʃaɛbiyya [path]* bronchitis.

شعبيّة *ʃaɛbiyya* /n/ popularity.

شعبة *ʃuɛba* /n pl *ʃuɛab*/ **1** division (e.g., in the police). **2** *[acad]* **2a** unit within which university departments are grouped (e.g., College of Science, Division of Arts). **2b** section, division of a large class. **3** *[anat]* bronchiole.

شعبة *ʃiɛba* /n pl *ʃiɛab*/ **1** *[rur]* forked stick (used, e.g., as a shepherd's crook, or as a prop for the axis of an Archimedes' screw, or, fixed in an upright position, as a peg on which clothes, food, etc. may be hung; see, e.g., Pl.D, 3). **2** (coral) reef.

سعّب *ʃaɛɛab* /vt/ to split, divide. -vn *taʃɛiib*; ava/pva *miʃaɛɛab*.

اتسعّب *ʔitʃaɛɛab* or *ʔiʃʃaɛɛab* /vi/ **1** to be split, be divided. **2** to branch off or out. *ʔiṭ-ṭariiɋ bi-yitʃaɛɛab hinaak* the road divides there. -ava/iva *mitʃaɛɛab*.

ش ع ب [2]

شعبان *ʃaɛbaan* /n/ Shaban, the eighth month of the Muslim year.

ش ع ب ط

سعبط *ʃaɛbaṭ* /vt/ to cause to cling. *da-nta llı ʃaɛbaṭ il-waad fiyya* you're the one who made the boy cling to my coat tails! -vn *ʃaɛbaṭa*; ava/pva *miʃaɛbaṭ*.

سعبيط *ʃuɛbeeṭ* /coll n/ a variety of nettle.

اتشعبط *ʔitʃaɛaṭ* or *ʔiʃʃaɛbaṭ* /vi/ to cling, hang on. *ʔitʃaɛbaṭ fi-ʔumm-u* he clung to his mother. *mitʃaɛbaṭ fil-ʔutubiis* hanging on to the bus. ‖*mitʃaɛbaṭ ɛala l-ḥibaal id-dayba [prov]* clinging to frayed ropes. -ava *mitʃaɛbaṭ*.

ش ع ر [1]

شعر *ʃaɛar (u)* /vi/ **1** to have a feeling, experience a sensation. *ɛaayiz yuʃɛur ʔinnu muhimm* he wants to feel that he's important. *mitlamm' ɛala baɛḍ-u tɋul-f' ʃaaɛir bi-bard* he's all curled up, you'd think he feels cold. **2** *[abus]* to spread malicious rumours. -vn *ʃuɛuur*; ava *ʃaaɛir*.

شعور *ʃuɛuur* [1] /n/ feeling, sensation. *ma-ɛanduu-ʃ ʃuɛuur* he has no feeling, he's thick-skinned. ‖*ʃuɛuur murhaf* sensitivity.

¶ *ʔil-laaʃuɛuur* /n/ the subconscious mind.

شعورى *ʃuɛuuri* /adj */ pertaining to feeling, sensate, sensational.

¶ *laaʃuɛuuri* /adj */ involuntary, unconscious, subconscious. *ḥaraka laʃuɛuriyya* an involuntary or unconscious movement.

شاعر *ʃaaɛir* /n pl *ʃuɛara*/ poet. ‖*ʃaaɛir ir-rabaaba* a folk entertainer, usually in coffee-houses. *-bi-yiḥki zayy if-ʃaaɛir* he keeps repeating himself like a gramophone record.

شاعرى *ʃaaɛiri* /adj */ poetic.

شعر *ʃiɛr* /n pl *ʃaʃɛaar*/ poetry, poetic composition.

شعرى *ʃiɛri* /adj */ poetic.

أشعر *ʔaʃɛar* [1] /el/ more/most poetic.

شعار *ʃiɛaar* /n pl *-aat*/ **1a** slogan. **1b** emblem. **2** (trade-) mark.

مشاعر *maʃaaɛir* /pl n/ feelings, sensations. *ḥaaga massit maʃaɛr-u* something which touched his feelings.

مشعور *maʃɛuur* /adj */ touched, crazy.

شعّر *ʃaɛɛar* [1] /vt/ to cause to have a sensation or feeling, make aware. *ʃaɛɛar-ni bi-htimaam-u* he made me sense his concern. -vn *taʃɛiir*; ava/pva *miʃaɛɛar*.

اتشعّر *ʔitʃaɛɛar* [2] or *ʔiʃʃaɛɛar* [2] /vi/ passive of *ʃaɛɛar* [1]. -iva *mitʃaɛɛar*.

أشعر *ʔaʃɛar* [2] /vt/ **1** to cause to feel. *ʔaʃɛart-u ʔinn' ʔana mabsuuṭ* I made him feel that I was happy. **2** to notify, inform. -vn *ʔiʃɛaar*; ava *muʃɛir*.

إشعار *ʔiʃɛaar* /n pl *-aat*/ notification, notice (e.g., bank statement).

استشعر *ʔistaʃɛar* /vt/ to experience the sensation of. *ʔistaʃɛart id-diiɋ* I felt depressed. ‖*ɋuruun istiʃɛaar* (insects') feelers, antennae. -vn *ʔistiʃɛaar*; ava *mistaʃɛar*.

ش ع ر [2]

شعر *ʃaɛr* /coll n, pl *ʃuɛuur*/ **1** hair(s). ‖*maʃya ɛala ḥall' ʃaɛr-a-ha* she's a loose woman. -*ʔumm if-ʃuɛuur* (1) an evil female demon. (2) weeping willow (Salix babylonica). **2** hair-like substance. ‖*silk' ʃaɛr* multi-core wire. *-ʃaɛr' ɋalfaṭa* oakum. *-ɋuṭn' ʃaɛr* raw unprocessed cotton.

شعرة *ʃaɛra* /n pl *-aat*/ **1** /unit n/ a hair. ‖*ɛandu ʃaɛra* he's cuckoo. *-ṭiliɛ minha zayy ıf-ʃaɛra mın ıl-ɛagiin* he emerged from it with not a hair out of place, he wriggled out of it cleverly. *-ʃaɛra mın daɋn il-xanziir maksab [prov]* ≈ (even) one hair from a miser is profit. **2** any of a range of hair-like objects (e.g., a filament, a slub, a lubber line). **3** a bit, a pinch. *ʃaɛrit malḥ* a pinch of salt. **4** *[path]* trichiasis.

شعراية *ʃaʕraaya* /n pl *-aat*/ a hair.
الشعريّة *ʔiʃ-ʃaʕriyya: baab iʃ-ʃaʕriyya* area of central Cairo near the old wall.
شعرة *ʃiʕra* /coll n/ pubic hair.
شعريّة *ʃiʕriyya* /n/ vermicelli.
شعير *ʃiʕiir* /coll n/ **1** barley. *ʃiʕir-na wala ɣamḥ[i] gar-na [prov]* better our own barley than another's wheat. ‖*ḥabbit ʃiʕiir* linear measure equal to 0.521 centimetres. *-ruzz[i] ʃʕiir* unhulled rice. **2** barley water.
سعيرة *ʃiʕiira* **1** /unit n, pl *-aat*/ a kernel of barley. **2** /n pl *ʃaʕaayir*/ diamond-shaped piece of mother-of-pearl used in inlay work.
شعيرة *ʃuʕayra↑* /n pl *-aat*/ **1** filament. **2** capillary.
مشعر *miʃʕir* /adj */ hairy, hirsute.
مشعراني *miʃʕaraani↓* /adj */ hairy, hirsute.
شعّر *ʃaʕʕar*[2] /vt/ **1** to separate into strands or filaments. **2** to remove the hair from (in tanning). -vn *taʃʕiir*; ava/pva *miʃaʕʕar*.
اتشعّر *ʔitʃaʕʕar*[2] or *ʔiʃʃaʕʕar*[2] /vi/ passive of *ʃaʕʕar*[2]. -iva *mitʃaʕʕar*.

ش ع ر[3] see ش ع و ر : *ʃuʕuur*[2]

ش ع ش ع
سعشع *ʃaʕʃaʕ* **1** /vt/ to brighten, cause to glow. *ʔil-wiski ʃaʕʃaʕ nafuux-i* the whisky set my head glowing. **2** /vi/ **2a** to become bright, glow. **2b** to reach one's best level, shine (of a performer). -vn *ʃaʕʃaʕa*; ava/pva *miʃaʕʃaʕ*.
اتشعشع *ʔitʃaʕʃaʕ* or *ʔiʃʃaʕʃaʕ* /vi/ **1** to become bright, glow. **2** to be made bright, be made to glow. -ava/iva *mitʃaʕʃaʕ*.

ش ع ط
سعط *ʃaʕaṭ (a)* /vt/ to burn, sting (of pepper). *ʔil-filfil ʃaʕaṭ lisaan-i* the pepper burned my tongue. -vn *ʃaʕaṭaan, ʃaʕṭ*; ava *ʃaaʕiṭ*; pva *maʃʕuuṭ*.
اتشعط *ʔitʃaʕaṭ* or *ʔiʃʃaʕaṭ* /vi/ passive of *ʃaʕaṭ*. -iva *mitʃiʕiṭ*.
انشعط *ʔinʃaʕaṭ* = *ʔitʃaʕaṭ*. -iva *minʃiʕiṭ*.

ش ع ع
شعّ *ʃaʕʕ (i)* **1** /vt/ to beam, radiate. *ʔil-bint[i] kaanit bi-tfiʕʕ[i] saʕaada* the girl radiated happiness. **2** /vi/ to beam, radiate, be radiated, be diffused. *ʔis-saʕaada kaanit bi-tfiʕʕ[i] min ʕenee* happiness was radiating from his eyes. -vn *ʃaʕʕ, ʃaʕaʕaan, ʔiʃʕaaʕ*; ava *ʃaaʕiʕ*.
شعاع *ʃuʕaaʕ* /n/ **1** /pl *ʔaʃiʕʕa*/ ray, beam. *ʃuʕaaʕ iʃ-ʃams* sunbeam. **2** /pl *ʃuʕaʕaat*/ fanlight. *ʃuʕaaʕ il-baab* a small vent located over a door.
أشعّة *ʔaʃiʕʕa* /n pl *-aat*/ x-ray, x-ray photograph.
أشاعّة *ʔuʃaaʕa↓* = *ʔaʃiʕʕa*.
إشعاع *ʔiʃʕaaʕ* /n pl *-aat*/ radiation, radioactivity. *ʔiʃʕaaʕ zarri* atomic radiation.
مشعّ *muʃiʕʕ* /adj/ **1** radiating, emitting. **2** radioactive. *naẓaaʔir muʃiʕʕa* radioactive isotopes.

ش ع ف
سعف *ʃaʕaf (i)* /vt/ **1** to inflame with passion. *ʔil-bint[i] ʃaʕafit-u* the girl set his heart on fire. **2** to hurry, rush. *ma-tiʃʕif-nii-ʃ kida* don't rush me! -vn *ʃaʕafaan, ʃaʕf*; ava *ʃaaʕif*; pva *maʃʕuuf*.
اتشعف *ʔitʃaʕaf* or *ʔiʃʃaʕaf* /vi/ passive of *ʃaʕaf*. -iva *mitʃiʕif*.
انشعف *ʔinʃaʕaf* = *ʔitʃaʕaf*. -iva *minʃiʕif*.

ش ع ل
سعل *ʃaʕal (i)* /vt/ to light, kindle. ‖*ʃaʕalnaa-ha naar ʕala l-ʔingiliiz* we made things hot for the British. -ava *ʃaaʕil*.
سعلة *ʃuʕla, ʃiʕla* /n pl *-aat, ʃuʕal*/ **1** flame. ‖*walad ʃiʕla* a very bright boy. **2** (flaming) torch.
أشعل *ʔaʃʕal[1]* /adj, fem *ʃaʕla* pl *ʃuʕl*/ **1** (of people) blondish, fair. **2** (of animals) light grey.
أشعل *ʔaʃʕal[2]↑* = *ʃaʕal*. -vn *ʔiʃʕaal*; ava *muʃʕil*.
إشعال *ʔiʃʕaal↑* /n/ -kindling, igniting, ignition.
اشتعل *ʔiʃtaʕal↑* /vi/ to catch fire, ignite. *ɣaabil lil-iftiʕaal* flammable. *sariiʕ l-iftiʕaal* highly flammable. -vn *ʔiftiʕaal*; ava *muftaʕil*.

ش ع ل ق
شعلق *ʃaʕlaɣ* /vt/ **1** to string up, hang up. *ʔig-gazzaar ʃaʕlaɣ il-xaruuf* the butcher strung up the sheep. **2** to ensnare. *huwwa miʃ ʕaawiz yitgawwiz bass[i] ʔana lli ḥ-aʃaʕlaɣ-u* he doesn't want to get married but I'm the one who will hook him. -vn *ʃaʕlaɣa*; ava/pva *miʃaʕlaɣ*.
اتشعلق *ʔitʃaʕlaɣ* or *ʔiʃʃaʕlaɣ* /vi/ **1** to cling, hang on. *kunt[a] ḥ-aɣaʕ ʕas-sillim fa-tʃaʕlaɣt[i] fid-darabziin* I was about to fall down the stairs so I clung to the banister. **2** to be hung up, be strung up. ‖ *ʔitʃaʕlaɣ min deel(-u)* to try to keep up with the Joneses. **3** to get hooked, become strongly attached. *ʔiʃʃaʕlaɣ fit-tadxiin* he got hooked on smoking. *ʔiʃʃaʕlaɣt[i] fiiha* I fell for her, hook, line and sinker. -ava/iva *mitʃaʕlaɣ*.

ش ع ل ل
شعلل *ʃaʕlil* /vt/ to kindle, cause to flare up. *ʔil-furaaɣ bi-yʃaʕlil il-ḥubb* absence makes the heart grow fonder. *ʔil-maṣaaliḥ illi bi-tʃaʕlil ḥuruub* the interests which spark off wars. ‖ *ʔalwaan miʃaʕlila* bright colours. -vn *ʃaʕlala*; ava/pva *miʃaʕlil*.

شعليلة *fuɛleela* /n pl *faɛaliil/* **1** fire, blaze. ‖*walad fuɛleela* a fire-brand of a boy. **2** tense or troubled situation.
اتشعلل *ʔitfaɛlil* or *ʔiffaɛlil* /vi/ **1** to be kindled. **2** to flare up, blaze. - ava/iva *mitfaɛlil*.

ش ع ن و ن
شعنونة *faɛnuuna* /n pl *faɛaniin/* **1** spitfire, woman given to flaring up at the slightest provocation. **2** epithet for the second henna crop.

ش ع ن ى ن
شعانين *faɛaniin: ɛiid* (or *ħadd) if-faɛaniin [Chr]* Palm Sunday.

ش ع و ر
شعور *fuɛuur*[2] /coll n/ Letherinus nebulasis, a Red Sea fish.

ش ع و ز
شعوذ *faɛwiz* **1**↑ /vi/ to practise magic or witchcraft. **2** /vt/ to bamboozle. - vn *faɛwaza*; ava *mufaɛwiz*; pva *mufaɛwaz*.
مشعوذ *mufaɛwiz* /n */ **1**↑ sorcerer. **2** bamboozler.

ش ع و ط
شعوط *faɛwaṭ* /vt/ to scorch, burn. ‖*ʔil-ħubb' faɛwaṭ ɑalb-i* love has afflicted my heart. - vn *faɛwaṭa*; ava/pva *mifaɛwaṭ*.
اتشعوط *ʔitfaɛwaṭ* or *ʔiffaɛwaṭ* /vi/ to be scorched, be burned. - iva *mitfaɛwaṭ*.

ش غ ب
شغب *faɣab* /n/ disturbance, trouble, disorder.
شاغب *faaɣib* **1** /vt/ to make trouble with, be troublesome with. *bi-tfaɣib-ha leeh* why are you stirring up trouble with her? **2** /vi/ to create a disturbance, cause an uproar. - vn *mifaɣba*; ava *mifaaɣib*.
مشاغب *mufaaɣib* /n */ trouble-maker, agitator.

ش غ ت
شغت *faɣat* /coll n/ white muscle-sheathing gristle.
شغتة *faɣata* /unit n, pl *-aat/* a piece of gristle.
شغتاية *faɣataaya = faɣata*.
مشغّت *mifaɣɣat* /adj/ having inedible tough parts, gristly (of meat).
مشغت *mifɣit = mifaɣɣat. ɑaalu leeh liħmit-ak mifɣita - ɑaal ig-gazzaar miɛrifa [prov]* ≈ business and friendship don't go together.

ش غ ف
شغف *faɣaf* /n/ zeal, eagerness, passion. *ɛandu faɣaf bil-ɑiraaya* he is an avid reader. ‖*bi-faɣaf* out of real love, as in *ɛamal if-fuɣl' da bi-faɣaf* he did this work out of real love for it.
شغوف *faɣuuf*↑ /adj */ dedicated (to one's work).
مشغوف *mafɣuuf* /adj */ passionate, engrossed. *huwwa mafɣuuf bis-siyaasa* he's completely taken up with politics.

ش غ ل
شغل *faɣal*[1] *(a)* /vt/ to occupy (a position etc.). *bi-yifɣal waẓiifit il-mudiir* he holds the position of director. - vn *faɣl*; ava *faaɣil*; pva *mafɣuul*.
شغل *faɣal*[2] *(i)* /vt/ **1** to engage, occupy, keep busy. *faɣalt' nafs-i bil-gineena* I kept myself busy with the garden. *ma-tifɣil-f' baal-ak bil-ħikaaya di* don't give any thought to this matter. ‖*hiyya faɣla ɑalb-i* ≈ she has captured my heart. - *baal-i mafɣuul ɛaleek* I'm worried about you. **2** to fill, occupy. *kull il-ʔuwaḳ mafɣuula* all the rooms are occupied. *ʔin-nimra mafɣuula* the number's engaged. **3** to work (fabric, metal etc.). *mafɣuul bil-ɑaṣab* worked with gold thread. - vn *faɣalaan, faɣl*; ava *faaɣil*; pva *mafɣuul*.
مشغولات *mafɣulaat* /pl n/ artifacts.
مشغوليّة *mafɣuliyya* /n pl *-aat/* **1** matter requiring attention. **2** preoccupation.
شغل *fuɣl* /n pl *ʔafɣaal/* **1** work. *ħ-axallaṣ if-fuɣl' da bukra* I'll finish this work tomorrow. *laɑeet fuɣl[a] ɛand il-gazzaar* I found work at the butcher's. ‖*da mif fuɣl-ak* that's not your business. *-fuuf fuɣl-ak* mind your own business! - *ʔafɣaal faaɑɑa [leg]* hard labour: **2** work, handicraft. *fuɣl' ʔibra* needlework. *fuɣl' yadd* hand-made product. *fuɣl' xafab bi-dahab* wood with gold inlay. *fuɣl' makana* machine-manufactured product. *ʔafɣaal maħalliyya* local handicrafts. — /no pl/ **3** (devious) business, (underhand) doings. *baṭṭal if-fuɣl' btaaɛ-ak da* stop being so devious. ‖*fuɣl it-talat waraɑaat* or *fuɣl in-naṣb* fraud, swindle.
شغلة *fuɣla* /n pl *-aat/* **1** job, task, function. *fuɣlit-u ʔinnu yɟabbil ṭuul in-nahaar* his job is to beat the drum all day long. *ma-tdawwar ɛala fuɣla* look for a job! **2** problem, hassle.
شغلانة *fuɣlaana = fuɣla*.
شغّال *faɣɣaal* **1** /n pl *-iin, faɣɣaala/* manservant, worker. **2** /adj */ **2a** working, functioning. *huwwa faɣɣaal gizamaati* he works as a shoemaker. *ʔil-makana faɣɣaala* the machine is working. **2b** active, hard-working. *raagil gadd' w-faɣɣaal* a serious and hard-working man. **2c** in working order.

شغّالة *ʃayyaala* /n pl *-aat*/ female servant, maid.
شغّيل *ʃayyiil* /n pl *ʃayyiila*/ worker, labourer.
مشغل *maʃyal* /n/ workshop (for handicrafts).
مشغلة *maʃyala: ʃuyla w-maʃyala* fuss and bother. *la ʃuyla wala maʃyala* nothing to do.
مشاغل *maʃaayil* /pl n/ **1** matters requiring attention, things to attend to. **2** preoccupations, distractions.
اتشغل *ʔitʃayyal* or *ʔiʃʃayyal* /vi/ **1** to keep busy, occupy oneself. ‖ *ʔitʃayyal bi-duruus-u* he was busy with his studies. *ʔil-fuqara b-yitʃiylu bil-gary[i] wara luqmit-hum* the poor are preoccupied with making a living. **2** to be worked (of fabric, metal etc.). **3** to be worried, be concerned, feel uneasy. - ava/iva *mitʃiyil*.
انشغل *ʔinʃayyal* = *ʔitʃayyal*. - vn *ʔinʃiyaal*; ava *minʃiyil*.
شغّل *ʃayyal* /vt/ **1** to employ. *bi-tʃayyal in-niswaan li-ḥsab-ha* she employs the women to work for her. *kaan bi-yʃayyal il-ʕarabiyya f-maʃawiir xuṣuṣiyya* he used the car for private errands. **2** to operate, work. *bi-yʃayyal il-makana* he operates the machine. *ʃayyalt[i] ʔisṭuwaana* I put on a record. - vn *taʃyiil*; ava/pva *miʃayyal*.
اتشغّل *ʔitʃayyal* or *ʔiʃʃayyal* /vi/ **1** to be employed. **2** to be operated, be put into operation. - iva *mitʃayyal*.
شاغل *ʃaayil* /vt/ to try to attract the attention of (s.o., e.g., in a flirtatious manner). - vn *miʃayla*; ava *miʃaayil*.
اتشاغل *ʔitʃaayil* or *ʔiʃʃaayil* /vi/ passive of *ʃaayil*. - iva *mitʃaayil*.
اشتغل *ʔiʃtayal (yiʃtayal)* /vi/ **1** to function, operate, work. *bi-yiʃtayal sawwaaq* he works as a driver. *huwwa miʃtiyil fil-muxaddaraat* he deals in drugs. *qaʕad yiʃtayal ʕal-ʕuud* he sat playing the lute. ‖ *ḥ-aʃtayal ʕalee - yimkin yiyayyar raʔy-u* I'll work on him - maybe he'll change his mind. - *ḥa-tiʃtayal ʕala miin* who are you trying to deceive! who do you think you're kidding? **2** to act, take hold, take effect. *ʔiʃ-ʃarba ʃtayalit* the laxative started working. *ʔil-muẓahraat iʃtayalit taani* the demonstrations have started up again. — /vt/ **3** to work (fabric, metal etc. with a pattern, embroidery, inlay etc.). *ʔiʃtayal il-xaʃab bi-dahab* he worked the wood with gold, he made a gold inlay in the wood. - vn *ʔiʃtiyaal, ʃuyl*; ava *miʃtiyil*.

ش غ ى

شغى *ʃaya (i)* /vi/ to teem with. *bi-yiʃyi naml* it is teeming with ants. *ʔil-ʃutubiis kaan bi-yiʃyi ʕasaakir* the bus was swarming with soldiers. - vn *ʃayayaan*; ava *ʃaayi*.

ش ف see ش ف ه : *ʃafateen*

ش ف ت

شفت *ʃift* <T *çift*> /n pl *ʃifuut*/ (pair of) tweezers. - also *gift*.

ش ف ت ر

شفتر *ʃaftar* /vi/ to become thick (of lips). - vn *ʃaftara*; ava *miʃaftar*.
شفتورة *ʃaftuura* /n pl *ʃafatiir*/ (thick, fat) lip.

ش ف ت ش ى

شفتشى *ʃiftiʃi* /adj invar/ immodest, tawdry (in flashiness and transparency, usually of clothes).

ش ف خ ا ن see ش ف ى : *ʃafaxaana*

ش ف ر[1]

شفر *ʃafr* /n/ labium (of pudenda).
شفرة *ʃafra[1]* /n pl *-aat*/ **1a** edge of a blade. **1b** razor blade. **2** lip (of a quadruped).

ش ف ر[2]

شفرة *ʃafra[2]* <Fr *chiffre*> /n pl *-aat*/ code, cipher. *fakk if-ʃafra* he deciphered the code.

ش ف ش ف

شفشف *ʃaffif* /vi/ to long, yearn, be eager. *tibqa tiʃaffif ʕala kubbaayit mayya ma-tlaqi-haa-ʃ* you could be dying for a glass of water and not find it! - vn *ʃaffafa*; ava *miʃaffif*.
اتشفشف *ʔitʃaffif* or *ʔiʃʃaffif* = *ʃaffif*. - ava *mitʃaffif*.

ش ف ش ق

شفشق *ʃaffaq* /n pl *ʃafaafiq*/ pitcher, jug.

ش ف ط

شفط *ʃafaṭ (u)* /vt/ **1** to sip, suck in, absorb. *ʔil-makana b-tuffuṭ it-turaab* the machine sucks in the dust. **2** to drain away, siphon off. *huwwa ʃafaṭ filuus-i kull-a-ha* he siphoned off all my money. - vn *ʃafaṭaan, ʃaft*; ava *ʃaafiṭ*; pva *maffuuṭ*.
شفطة *ʃafṭa* /inst n, pl *-aat*/ a sip, a suck, a gulp.
شفّاط *ʃaffaaṭ* /n pl *-aat*/ siphon, suction pump, (loosely) any apparatus which works by siphoning or sucking (e.g., pipette). ‖ *ʃaffaaṭ ḥabb* grain elevator.
شفّاطة *ʃaffaaṭa* /n pl *-aat*/ **1** drinking straw. **2** intake component of a vacuum cleaner. **3** ventilator fan. **4** (short for *ʃaffaaṭit ballaaʕa*) drain plunger.
اتشفط *ʔitʃafaṭ* or *ʔiʃʃafaṭ* /vi/ **1** to be sipped, be sucked in, be absorbed. **2** to be drained away, be siphoned off. - iva *mitʃifiṭ*.
انشفط *ʔinʃafaṭ* = *ʔitʃafaṭ*. - iva *minʃifiṭ*.
شفّط *ʃaffaṭ* /vt/ **1** to cause to suck, cause to sip. **2** to siphon. *ʃaffaṭ il-banziin min il-ʕarabiyya* he siphoned

the petrol from the car. - vn *taffiiṭ*; ava/pva *miʃaffaṭ*.
اتشفّط ʔiṭʃaffaṭ or ʔiʃʃaffaṭ /vi/ passive of *ʃaffaṭ*. - iva *miṭʃaffaṭ*.

ش ف ع
سفع *ʃafaɛ (a)* /vi/ to intercede. - vn *ʃafaaɛa, ʃafaɛaan*; ava *ʃaafiɛ*.
سافع *ʃaafiɛ* **1** /ava/ ‖*la ʃaafiɛ wala naafiɛ* there's no good in him, he's of no use to anyone. **2** /n */ mediator, intercessor.
الشافعى ʔiʃ-ʃafɛi /prop n/ the Imam el-Shafi'i (d. 820 AD), eponym of the Shafi'i school of Islamic law (ʔiṣl-*mazhab iʃ-ʃafɛi*) as well as of a mosque and a large graveyard in Cairo.
سفعة *ʃufɛa* /n/ *[leg]* right of pre-emption.
سفيع *ʃafiiɛ* /n pl *ʃufaɛa*/ mediator, intercessor.
اتسفّع ʔiṭʃaffaɛ or ʔiʃʃaffaɛ /vi/ to intercede. - ava *miṭʃaffaɛ*.

ش ف ف [1]
سفّ *ʃaff (i)* /vt/ to trace, copy by tracing. *ʃaff ir-rasma* he traced the pattern. ‖*fustaan bi-yʃiff' wi-yriff* a classy dress. - vn *ʃaff, ʃafafaan*; ava *ʃaafif*; pva *maʃfuuf*.
سفافيّة *ʃafafiyya* /n/ translucence. ‖*ɛandaha ʃafafiyya* she has psychic powers.
سفّاف *ʃaffaaf* /adj/ translucent, semi-transparent. *waraq ʃaffaaf* tracing paper.
اتسفّ ʔiṭʃaff or ʔiʃʃaff /vi/ to be traced, be copied by tracing. - iva *miṭʃaff*.

ش ف ف [2] see ش ف ه : *ʃiffa*

ش ف ق
شفق *ʃafaq (a)* /vi/ to show charity or compassion. - vn *ʃafaqaan, ʃafaqa, ʃafaq*; ava *ʃaafiq*.
شفقة *ʃafaqa* /n/ charity, compassion.
شفقان *ʃafqaan* /adj */ compassionate, sympathetic, disposed to mercy.
سفوق *ʃafuuq* /adj */ kind-hearted.
اتسفق ʔiṭʃafaq or ʔiʃʃafaq /vi/ passive of *ʃafaq*. ʔiṭʃafaq ɛalee min kutr iḍ-ḍarb he received much sympathy for being beaten so hard. - iva *miṭʃifiq*.
أسفق ʔaʃʃaq = *ʃafaq*. - vn ʔiʃʃaaq, ava *miʃʃiq*.

ش ف ن ى ر
سفنيرة *ʃufuneera* or *ʃufuniira, ʃifaniira* or *ʃifanyiira* <Fr *chiffonier*> /n pl *-aat*/ piece of (bedroom) furniture consisting of drawers and cupboard, chiffonier.

ش ف ه
سفتين *ʃafateen* /dual n/ (one's) lips. *titniṭiq bi-ḍamm iʃ-ʃafateen* it is pronounced with the lips rounded.
سفة *ʃiffa* /n/ **1** /pl *ʃafaayiʃ, ʃifaf*/ lip. **2** /pl *ʃifaf*/ **2a** border, edge. *ʃiffit iṭ-ṭarabeeza* the edge of the table. **2b** *[mech]* jaw (of a vice etc.).
سفهى *ʃafahi* /adj/ oral, spoken.
سفوى *ʃafawi* /adj/ oral, spoken. ʔimtiḥaan *ʃafawi* oral examination.
سفاهى *ʃifaahi*↑ = *ʃafahi*.
مسافهه *muʃafha* /adv/ orally.

ش ف ه و ل
سفهول *ʃifhool* <Fr *chef de hall*> /n pl *ʃifaat hool*/ barroom supervisor in a hotel.

ش ف و see ش ف ه : *ʃafawi*

ش ف و ن
سفون *ʃifoon* <Fr> /n/ chiffon.

ش ف ى [1]
سفى *ʃifi (a)* /vi/ to recover, improve in health. ‖ʔiṛfu *tiffu [prov]* see *raʃa* under ر ش ى - vn *ʃifa, ʃifaa*ʔ↑.
سفى *ʃafa (i)* /vt/ to cure, heal. *ṣalawaat il-ʔimaan tiffi l-mariiḍ [Chr]* the prayers of faith heal the sick. ‖*ʃafaa-kum allaah wi-ɛafaa-kum [rur]* (God give you health and strength) response to *ʃufiitum* (q.v. below). - vn *ʃifa*; ava *ʃaafi*; pva *maʃfi*.
¶*ʃufiitum [rur]* (may you have been relieved!) formula said to one leaving a lavatory.
سفاء، سفاء *ʃifa* /n/ healing. ‖*bil-hana wiʃ-ʃifa* (≈ may it be of benefit to you) response to (1) an invitation to share food. (2) an appreciative comment on, or thanks given for, a meal. - *biʃ-ʃifa* (commonly said when giving out medication) ≈ may it bring good health.
سافى *ʃaafi* /n/ Healer (epithet of God).
شفخانة *ʃafaxaana* /n pl *-aat*/ **1** *[rur]* animal hospital. **2** *[obsol]* mobile military hospital.
سفيّة *ʃafiyya: ya ʃaafi kull' ʃafiyya* you who bring about every cure (phrase addressed to God in *raqw*).
اتسفّى ʔiṭʃaffa[1] or ʔiʃʃaffa[1] /vi/ to indulge in malicious pleasure. ʔiṭʃaffa *fiyya lamma fallist* he gloated over my going bankrupt. - vn *taʃaffi*; ava *miṭʃaffi*.
مشفى *muʃfi* /n */ healer.
مستشفى *mustaʃfa, mistaʃfa* (also *muʃtaʃfa, miʃtaʃfa*) /n, usu fem, in constr also *mustaʃfit*, pl *mustaʃfayaat, mistaʃfayaat, mistaʃfiyaat, miʃtaʃfiyyaat*/ hospital.

ش ف ي ²

سفّى *ʃaffa* /vt/ to bone. *laḥma mʃaffiyya* boned meat. - vn *taffiyya*; ava/pva *miʃaffi*.

اتشفّى *ʔitʃaffa²* or *ʔiʃʃaffa²* /vi/ to be boned (of meat). - iva *mitʃaffi*.

ش ق ء ف ز

سقأفزا *ʃuqʔafza* <P *shauq-afzâ*> /n/ *[mus]* mode in Arabic music beginning on B flat and having E flat and G flat.

ش ق ب

مسقبيّة *maʃqabiyya* /n pl *-aat*/ mortise, or any slot or hole made in a piece of metal to receive and secure a corresponding piece, e.g., the fork end of a bicycle.

ش ق ر ¹

شقّر *ʃaqqar* /vi/ to make a check (with a personal visit). *ʃilʕit tiʃaqqar ʕala l-waad* she went out to look in on the kid. *ma-tiigi tʃaqqar ʕaleena* do come and see how we are. - vn *taʃqiir*; ava *miʃaqqar*.

اتشقّر *ʔitʃaqqar* or *ʔiʃʃaqqar* /vi/ (impersonal) passive of *ʃaqqar*. *ḥa-yitʃaqqar ʕaleehum* they will be checked on. - iva *mitʃaqqar*.

ش ق ر ²

أسقر *ʔaʃqar* /adj, fem *ʃaqra*, pl *ʃuqr*/ **1** blond. **2** sorrel (of a horse).

أسقراني *ʔaʃqaraani* /adj */ blondish.

ش ق ر ³

سقارة *ʃaqaara: ʔil-filuus bi-truuḥ ʃaqaara nqaara* the money's going down the drain.

ش ق ر ف

سقرف *ʃuqruf* /n pl *ʃaqaarif*/ a medium-sized sickle.

شقرف *ʃaqraf* /vt/ to mow or reap with a *ʃuqruf*. - vn *ʃaqrafa*; ava/pva *miʃaqraf*.

اتشقرف *ʔitʃaqraf* or *ʔiʃʃaqraf* /vi/ passive of *ʃaqraf*. - iva *mitʃaqraf*.

ش ق ش ق see **ش ء ش ء**

ش ق ط

شقط *ʃaqaṭ (a)* /vt/ to catch (a flying or falling object). *ʃaqaṭt il-beeḍa qabl' ma tuqaʕ* I caught the egg before it fell. - vn *ʃaqṭ, ʃaqaṭaan*; ava *ʃaaqiṭ*; pva *maʃquuṭ*.

شقطة *ʃaqṭa* /inst n, pl *-aat*/ a catch.

اتشقط *ʔitʃaqaṭ* or *ʔiʃʃaqaṭ* /vi/ passive of *ʃaqaṭ*. - iva *mitʃiqiṭ*.

ش ق ع

شقع *ʃuqaʕ: ʃuqaʕ buqaʕ (ya rabb' yuqaʕ)* (children's chant when one of them tries a difficult climb) ≈ hope he falls off!

ش ق ف ¹

سقف *ʃaqaf (u)* /vt/ to hurl at, shoot at. *ʃaqaf-ni b-ṭuuba* he cast a stone at me. ‖*min ʃaaqif li-laaqif li-qabbaaq il-ʔarwaaḥ [prov]* (from thrower to catcher to the angel of death) this way, that way, and then to perdition (usually with reference to money consumed, or to individual suffering). - vn *ʃaqf*; ava *ʃaaqif*; pva *maʃquuf*.

سقف *ʃaqf* /coll n/ potsherd(s).

شقفة *ʃaqfa* /unit n, pl *-aat, ʃuqaf*/ a (pot)sherd.

سقفاية *ʃaqfaaya = ʃaqfa*.

شقافة *ʃuqaafa* /coll n/ potsherd(s).

شاقوف *ʃaquuf* /n pl *ʃawaqiif*/ tool used for breaking rock.

اتشقف *ʔitʃaqaf* or *ʔiʃʃaqaf* /vi/ to be pelted, be shot at. - iva *mitʃiqif*.

انشقف *ʔinʃaqaf = ʔitʃaqaf*. - iva *minʃiqif*.

ش ق ف ²

مشفوف *maʃquuf* /adj */ longing, anxious. *maʃquuf ʕal-mayya* dying for a drink of water. *maʃquufa ʕala-bn-a-ha* anxious about her son.

ش ق ق

شقّ *ʃaqq' (u)* /vt/ **1** to split. *baṭṭiixa maʃquuqa* a split water-melon. ‖*ʃaqq' hduum-u* he reached the end of his tether. **2** to cut, dig (a road or canal). ‖*ʃaqq' ṭariiq-u l-waḥd-u* he made it on his own. - vn *ʃaqq, ʃaqaqaan, ʃiqqiyya*; ava *ʃaaqiq*; pva *maʃquuq*.

شَقّ *ʃaqq²* /n pl *ʃuquuq*/ **1** slit, crack, split. *sadd' gamiiʕ ʔif-ʃuquuq* he filled in all the cracks. ‖*ḥaṭṭ' ṣubaaʕ-u fiʔ-ʃaqq [prov]* he gave up, he threw in the towel. - *yiṭlaʕ min ʔif-ʃuquuq yixallaṣ il-ḥuquuq [prov]* ≈ help sometimes comes from the most unexpected quarters. **2** a half. *ʃaqq' fuul* a half-loaf *fuul midammis* sandwich. *ʃaqq il-qamar* half-moon shape.

شقّة *ʃaqqa* /n/ **1** /pl *-aat*/ **1a** /unit n/ a split, a cut. **1b** half (of s.th. (split) in two parts, e.g., a half-round of Arab bread, a buttock, a side of beef). **2** /pl *ʃuqaq, ʃiqaq*/ apartment, flat.

شاقّ *ʃaaqq* /adj/ arduous, troublesome. *tadriib-u ʃaaqq* training him is a tedious matter. *ʔaʃɣaal ʃaaqqa [leg]* hard labour.

شقيق *ʃiqiiq* /n pl *ʃuqaqa, ʃaqaayiq, ʔaʃiqqa*/ **1** full brother. **2** /with masc n referent/ exact replica, twin. *ʃustaan ʃiqiiq bitaaʕ-ik* a dress exactly like yours.

شقيقة *ʃiqiiqa* /n pl *ʃuqaqa, ʃaqaayiq*/ **1** full sister. *ʃuxteen ʃaqaayiq* two full sisters. ‖*ʃiqiiqit nuʕmaan [bot]* red anemone. **2** /with fem n referent/ exact replica, twin. *gallabiyya ʃqiiqit bitaʕt-ak* a galabiya exactly like yours.

مشقّة *maʃaqqa* /n/ hardship. *ʃil-ʃagr[a] ʕala qadd il-maʃaqqa* the recompense is commensurate with the effort.

اتشقّ *ʃitʃaqq* or *ʃiʃʃaqq* /vi/ **1** to split. *b-atmanna l-ʃarḍ' tiʃʃaqq' w-tiblaʕ-ni* I wish the earth would open up and swallow me! (said in cases of extreme grief, embarrassment or annoyance). **2** passive of *ʃaqq[1]*. - ava/iva *mitʃaqq*.

انشقّ *ʃinʃaqq* = *ʃitʃaqq*. - vn *ʃinʃiqaaq*; ava/iva *minʃaqq*.

شقّق *ʃaqqaq* **1** /vt/ to split, crack open. **2** /vi/ to crack, split, become cracked or split. *ʃarḍ' naʃʃa wi-mʃaqqaqa* dry, cracked earth. - vn *taʃqiiq*; ava/pva *miʃaqqaq*.

اتشقّق *ʃitʃaqqaq* or *ʃiʃʃaqqaq* /vi/ **1** passive of *ʃaqqaq*. **2** to crack, split. - vn *taʃaqquq*; ava/iva *mitʃaqqaq*.

ش ق ل

شقل *ʃaqal (u)* /vt/ to throw, fling. *ʃiʃqul-li l-koora* throw me the ball. - vn *ʃaqalaan, ʃaql*; ava *ʃaaqil*; pva *maʃquul*.

شقلة *ʃaqla* /inst n, pl *-aat*/ a throw. ‖*laazim ʕandu ʃaqlit filuus* he must have a bundle! he must have oodles of money!

اتشقل *ʃitʃaqal* or *ʃiʃʃaqal* /vi/ to be thrown, be flung. - iva *mitʃiqil*.

ش ق ل ب

شقلب *ʃaqlib* /vt/ to overturn, flip over. *ʃeeh illi ʃaqlib ḥal-kum* whatever happened to change your circumstances? *ḥubb-u ʃaqlib ʕaql-i* his love flipped my mind! - vn *ʃaqlaba*; ava/pva *miʃaqlib*.

شقلبة *ʃaqlaba* /n pl *-aat*/ flip.

شقليبة *ʃuqleeba* /n pl *ʃaqaliib*/ whirl.

مشقلب *miʃaqlib* /pva/ ‖*bil-miʃaqlib* (1) upside down. (2) inside out.

اتشقلب *ʃitʃaqlib* or *ʃiʃʃaqlib* /vi/ to overturn or be overturned, flip over or be flipped over. *ʃiʃʃaqlib li-cuddaam fil-hawa* he made a forward flip in the air. - ava/iva *mitʃaqlib*.

ش ق ل ب –

شقلباظ *ʃaqlabaaẓ* <prob T *şaklaban*> /n/ **1** somersault. **2** tumbler (pigeon). – /adj invar/ **3** shifty, slippery.

ش ق و see ش ق ى : *ʃaqaawa*

ش ق ى

شقى *ʃiqi (a)* /vi/ to toil, work hard. *bi-yiʃqa ʕaʃaan yiwakkil-na* he slaves to feed us. - vn *ʃaqa, ʃaqayaan*; ava *ʃaqyaan*.

شقى *ʃaqi* /adj pl *ʃaʃqiya, ʃuqaay*/ **1** naughty, mischievous. ‖*ʕumr if-ʃaqi baqi [prov]* the life of the scamp lasts longest. **2** miserable, wretched. ‖*fii ḥadd' ykuun fi-ʃiid-u l-qalam wi-yiktib nafs-u ʃaqi [prov]* (is there anyone who if he held the pen would write himself unfortunate) ≈ no one is willingly wretched.

أشقى *ʔaʃqa* /el/ **1** more/most naughty or mischievous. **2** more/most miserable.

شقاوة *ʃaqaawa* /n/ naughtiness, mischief.

اتشاقى *ʃitʃaaqa* or *ʃiʃʃaaqa* /vi/ to be naughty, behave mischievously. - ava *mitʃaaqi*.

ش ك ا

شكا، شكه *ʃaka[1]* /n/ style of serving in the game of *xara* (q.v.). - also *ʃakumba*.

ش ك ا ر

شكارة *ʃikaara* or *ʃukaara* /n pl *-aat, ʃakaayir*/ gunny sack, small- or medium-sized sack. *ʃikaarit ʃasmant* sack of cement.

ش ك ب ب

شكبّة *ʃukubba* <It *scopa*> /n/ *[naut]* broom, mop. - also *ʃuʃkubba*.

ش ك ح

شكح *ʃakaḥ (i)* /vt/ to send into raptures. *min saaʕit ma simiʕ ḥiss' ʃumm' kalsuum qaaʕid maʃkuuḥ* since he first heard Umm Kalthum's voice he's been enraptured. - vn *ʃakḥ*; ava *ʃaakiḥ*; pva *maʃkuuḥ*.

انشكح *ʃinʃakaḥ* /vi/ to be filled with pleasure, be enraptured. *lamma ʃuft il-bint' di nʃakaḥt* when I saw this girl I was enraptured. - vn *ʃinʃikaaḥ*; iva *minkiʃiḥ*.

اتشكح *ʃitʃakaḥ* or *ʃiʃʃakaḥ* = *ʃinʃakaḥ*. - iva *mitʃikiḥ*.

ش ك ر [1]

شكر *ʃakar (u)* **1** /vt/ to thank, give thanks to, express gratitude, acknowledgement or appreciation to. *laazim ʃaʃkur-u ʕalee* I must thank him for it. ‖*ʃakar allaahu saʕya-kum* response to phrases of condolence ≈ may God reward your efforts. **2** /vi/ to speak highly, give praise. *ma yiʃkur fi-nafs-u ʃilla ʃibliis [prov]* (only Satan praises himself) nothing is more foul than self-praise. - vn *ʃukr, ʃukraan*; ava *ʃaakir*; pva *maʃkuur*.

¶ *tuſkar* thank you! many thanks!
شكر *ſukr* /n/ thanks. || *ſalf*^{i} *ſukr* a thousand thanks! - *ſiſ-ſukr*^{i} *li-llaah* ≈ don't mention it (response to expressions of thanks).
¶ *ſukran* thank you! thanks!
شكرانيّة *ſukraniyya* /vn/ praising, praise. || *ſana b-aquul kida miſ ſukraniyya f-nafs-i* I say this with all due modesty.
شكور *ſakuur* /n/ He to whom we owe thanks (epithet of God).
اتشكر *ſitſakar* or *ſiſſakar* /vi/ **1** to be thanked. **2** (impersonal) passive of *ſakar* 2. *ſitſakar fii* he was praised. - iva *mitſikir*.
انشكر *ſinſakar* = *ſitſakar*.
اتشكّر *ſitſakkar* or *ſiſſakkar* /vi/ to express thanks, give thanks. - aya *mitſakkar*.
متشكّر *mutaſakkir, mutſakkir* /adj */ thankful. *(ſana) mutaſakkir* thanks! (I) thank you!

ش ك ر [2] see ش ك ا ر : *ſikaara*

ش ك ر م
شكارمة *ſikarma* <Gr *skarmos*> /n pl *-aat*/ tholepin. - also *ſiſkarma*.

ش ك ر ى ا
شكوريا *ſikurya* <It *cicoria*> /n/ chicory.

ش ك س
شاكس *ſaakis* /vt/ to provoke, pick a fight with. *qaʕad yiſakis-ni l-ʏaayit ma qarabt-u* he went on provoking me until I hit him. - vn *miſaksa*; ava *miſaakis, muſaakis*.
مشاكسة *muſaksa, miſaksa* /n pl *-aat*/ quarrel, fight, argument.
اتشاكس *ſitſaakis* or *ſiſſaakis* /vi/ to quarrel, be quarrelsome. *ħ-atſaakis maʕaahum* I'll pick a fight with them. - ava *mitſaakis*.

ش ك ش ك
شكشك *ſakſik* /vt/ **1** to prick, cause to feel prickly. *ſiṣ-ṣuuf il-xiſin bi-yſakſik-ni* rough wool makes me feel prickly. — /vi/ **2** to feel prickled, feel prickly. **3** to bubble (of a liquid, from heat). - vn *ſakſaka*; ava/pva *miſakſik*.
اتشكشك *ſitſakſik* or *ſiſſakſik* /vi/ **1** to be prickled, be prickled. **2** to feel prickled, feel prickly. - ava/iva *mitſakſik*.

ش ك ش و ك
شكشوكة *ſakſuuka* /n/ **1** any of various dishes, consisting usually of a base of tomatoes and onions in which fish or, more commonly, eggs are cooked, sometimes with the addition of rice or *fuul*. **2** type of fish.

ش ك ك [1]
شكّ *ſakk*^{1} *(i, u)* **1** /vt/ to prick. *ſakk il-ʕirq*^{i} *w-nizil damm* he pricked the vein and blood came out. ||*ſakk(-u) maqlab* (or *dabbuus*) to play a dirty trick on (s.o.). **2** /vi/ to have doubts or suspicions. *bi-tſukk*^{i} *fi-lli ſana b-aquul-u* do you doubt what I say? *ſaſxaaṣ maſkuuk fiihum* suspects. - vn *ſakk*; ava *ſaakik*; pva *maſkuuk*.
شكّ *ſakk*^{2} /n pl *ſukuuk*/ doubt. *la ſakk* or *bila ſakk* or *ma-fii-ſ ſakk* no doubt.
شكّة *ſakka* /n pl *-aat*/ **1** /unit n/ a prick. *bi-yʕayyaṭ min ſakkit dabbuus* he cries from a pin-prick (i.e. for the slightest reason). **2** small stitch.
اتشكّ *ſitſakk* or *ſiſſakk* /vi/ **1** to be pricked. *yiſſakk*^{i} *f-lisaan-u [women]* may his (evil) tongue be pricked! **2** (impersonal) passive of *ſakk*^{1} 2. *ſitſakk*^{i} *fii* he is suspected. - iva *mitſakk*.
انشكّ *ſinſakk* = *ſitſakk*. - iva *minſakk*.
شكّك *ſakkik*^{1} /vt/ **1** to prick repeatedly. **2** to cause (s.o.) to have doubts or misgivings. *ſakkik-ni fiſ-ſuvl*^{i} *kull-u* he gave me misgivings about the whole affair. *ħagaat tiſakkik fil-ħukuuma* things which raise doubts about the government. - vn *taſkiik*; ava *miſakkik*.
اتشكّك *ſitſakkik*^{1} or *ſiſſakkik*^{1} /vi/ passive of *ſakkik*^{1}. - iva *mitſakkik*.

ش ك ك [2]
شكك *ſukuk* /n/ credit. *ʕiſt*^{i} *biſ-ſukuk* I lived on credit. *ſiſ-ſuḳuk mamnuuʕ wiz-zaʕal marfuuʕ* ≈ credit is not given and annoyance is (thereby) removed (sign in cheap shops, bars etc.). - /adverbially/ on credit. *ſiſtareet-u ſukuk* I bought it on credit.
شكّك *ſakkik*^{2} /vt/ to buy or sell on credit. *ſakkik il-biḍaaʕa* he sold the merchandise on credit. *ſana ma-b-aſakkik-ſ* I don't accept credit. - ava *taſkiik*; ava *miſakkik*.
اتشكّك *ſitſakkik*^{2} or *ſiſſakkik*^{2} /vi/ passive of *ſakkik*^{2}. - iva *mitſakkik*.

ش ك ك [3]
شكّ *ſakk (u)* /vi/ **1** to take, catch (of fire, and the like). **2** to harden, set (of concrete or plaster). *xarasaana sariiʕit if-ſakk* quick-setting concrete. — /vt/ **3** to strike (a match). - vn *ſakka, ſakakaan*; ava *ſaakik*.
شكّاكة *ſakkaaka* /n pl *-aat*/ striking surface (of a match-box).

ش ك ل [1]

شكل *ʃakl* /n pl *ʃaʃkaal*/ **1a** shape, form. *kawitʃ[a] ɛala ʃakl' dayra* rubber in a circular shape. **1b** figure, diagram. **2** (also *ʃikl*) appearance. *ʃakl-a-ha ɦilw* she has a nice appearance. *ʃakl-u mirtiʃi* he looks like someone who'll take a bribe. **3** way, manner. *laazim ʕaṭlaɛ bi-ʕayy' ʃakl* I must get out by any means. *bi-ʃakl[a] ɛamali* in a practical way. **4** kind, sort, specimen. *ʃii ʃakl' xaʃabi* there is a wooden kind. ‖ *ʕanwaaɛ wi-ʕaʃkaal* or *ʕaʃkaal wi-ʕalwaan* a wide variety. — /masc and fem sing adj/ **5** (also *ʃikl*) different. *kull' yoom bi-yruuɦ li-duktuur ʃakl* every day he goes to a different doctor.

¶ *bi-ʃakl* /adv/ very, extremely. *hiyya laṭiifa b-ʃakl* she's very charming.

شكلي *ʃakli*↑ /adj/ formal. *ʕigraaʕ ʃakli* a formal measure.

شكليّات *ʃakliyyaat*↑ /pl n/ formalities.

شكل *ʃikl* see *ʃakl* 2 and 5.

أشكل *ʕaʃkal* /el/ more/most strange or odd. *ʕil-ʕaʃkal ʕinn il-bint' mabsuuṭa maɛaa* the strangest thing is that the girl is happy with him.

شكّل *ʃakkil* /vṭ/ **1** to give shape or form to. *bi-yʃakkil in-naɦaas zayy' ma-nta ɛaayiz* he shapes the copper as you want. **2** to make up, constitute. *ɦa-nʃakkil lagna* we'll form a committee. *ʕil-ɦikaaya di bi-tʃakkil xuṭuura kbiira* the affair constitutes a great danger. **3** to make an assortment of. *ʃakkil-li bumbuuni* make an assortment of candies for me! **4** to mark (Arabic words) with short vowel signs. - vn *taʃkiil*; ava/pva *miʃakkil*.

تشكيل *taʃkiil* /n pl *-aat, taʃakiil*/ formation. *taʃkiil huguum* attack formation.

تشكيلة *taʃkiila* /n pl *-aat*/ **1** assortment. *taʃkiilit salaṭaat* an assortment of salads. **2** *[text]* defect in weave resulting from the warp dropping the woof.

تشكيلي *taʃkiili* /adj/ plastic, formative. *ʕil-funuun it-taʃkiliyya* the plastic arts.

مشكّل *miʃakkil* /adj/ mixed, assorted. *gilaas mɪʃakkil* mixed-flavour ice cream. ‖ *gazma mʃakkila* two-tone shoes.

اتشكّل *ʕitʃakkil* or *ʕiʃʃakkil* /vi/ **1** passive of *ʃakkil*. **2** to take shape or form. - ava/iva *mitʃakkil*.

ش ك ل [2]

شكل *ʃakal* /n/ quarrelling. *wiʃʃ' da walla garr' ʃakal [joc, abus]* (is that a face or an attempt to pick a quarrel?) what sort of face is that you're pulling? (to one with a stern countenance).

شكلة *ʃakla* /n pl *-aat, ʃukal*/ quarrel.

شكل *ʃukal*↓ /adj invar/ quarrelsome, cantankerous.

شكلي *ʃukali* /adj */ quarrelsome, cantankerous.

شاكل *ʃaakil* /vt/ be quarrelsome with, provoke. - vn *miʃakla*; ava *miʃaakil*.

اتشاكل *ʕitʃaakil* or *ʕiʃʃaakil* /vi/ to pick fights, get into fights. - ava *mitʃaakil*.

إشكال *ʕiʃkaal* /n pl *-aat*/ problem, difficulty.

مشكل *muʃkil* /n pl *maʃaakil*/ problem, difficulty.

مشكلة *muʃkila* /n pl *maʃaakil, muʃkilaat*/ problem, difficulty. *ɛayziin niɦill il-muʃkila* we want to solve the problem.

استشكل *ʕistaʃkil* /vi/ *[leg]* to find legal grounds for contesting a case. - vn *ʕistiʃkaal*; ava *mistaʃkil*.

ش ك ل ا –

شيكولاتا *ʃukulaata, ʃukalaata, ʃakalaata*↓, *ʃikulaata* <It *cioccolata*> /coll n/ chocolate(s).

سيكولاتاية *ʃukulataaya, ʃukalataaya, ʃakalataaya*↓, *ʃikulataaya* /unit n, pl *ʃukulataat, ʃukalataat, ʃakalataat*↓, *ʃikulataat*/ a chocolate, a bar or piece of chocolate.

ش ك ل ل م

شكّلمة *ʃakallama* <prob T *şekerleme*> /n/ type of pastry with coconut.

شكّلماية *ʃakallamaaya* /n pl *ʃakallamaat*/ unit noun of *ʃakallama*.

ش ك م [1]

سكم *ʃakam (u, i)* /vt/ to curb, restrain. *ma-yiɛraf-ʃ' yuʃkum ibn-u* he doesn't know how to control his son. - vn *ʃakamaan, ʃakm*; ava *ʃaakim*; pva *maʃkuum*.

اتسكم *ʕitʃakam* or *ʕiʃʃakam* /vi/ to be curbed, be restrained. - iva *mitʃikim*.

انسكم *ʕinʃakam* = *ʕitʃakam*. - iva *minʃikim*.

ش ك م [2]

سكمة *ʃakma* <T *çıkma*> /n pl *-aat*/ (enclosed) balcony.

ش ك م ا ن

سكمان *ʃakmaan, ʃakamaan* <prob Fr *échappement*> /n pl *-aat*/ *[auto]* exhaust system.

ش ك م ب ا

شكمبا *ʃakumba* /n/ style of serving in the game of *xara* (q.v.). - also *ʃaka*.

ش ك م ج ي

شكمجيّة *ʃakmagiyya* <T *çekmece*> /n pl *-aat*/ *[obsol]* casket, dressing-case.

ش ك و see ش ك ى : *ʃakwa*

ش ك و ش
شاكوش *ʃakuuʃ* <T *çekiç*> /n pl *ʃawakiiʃ*/ **1** hammer. *ḍarb' ʃakuuʃ* hammer blow (in boxing). **2** *[auto]* rotor (of a car distributor). **3** /no pl/ inspector (of railway track).

ش ك ى
سكى *ʃaka*[2] *(i)* /vt/ to complain about. *ʃaka (min) ḥaal-u* he bewailed his state. *ʃakit goż-ha l-ʃumm-a-ha* she complained about her husband to her mother. *ʃakaa-ni lil-buliiṣ* he went and reported me to the police. ‖ *ʃiʃ-ʃakwa li-ɤeer illaah mazalla [prov]* to complain to other than God is a humiliation. - *ʃiʃ-ʃakwa li-ʃaḥl il-baṣiira ɛeeb [prov]* to complain to the perspicacious is improper (because they can see (what's wrong) for themselves). - vn *ʃikaaya, ʃakw, ʃakwa, ʃakiyya*; ava *ʃaaki*; pva *maʃki*.
سكوى *ʃakwa* /n pl *ʃakaawi*/ complaint.
ساكى *ʃaaki* /n pl *ʃukaah*/ accuser.
سكّاى *ʃakkaay* /adj */ given to complaining. *ʃakkaay bakkaay* perpetually whining and complaining.
اتسكى *ʃitʃaka* or *ʃiffaka* /vi/ (impersonal) passive of *ʃaka. ḥaaga ma-yitʃikii-ʃ minha* a matter one doesn't complain about. - iva *mitʃiki*.
انشكى *ʃinʃaka* = *ʃitʃaka*. - iva *minʃiki*.
اتشكّى *ʃitʃakka* or *ʃiffakka* /vi/ **1** to complain. **2** to appeal (against a judgement). - vn *taʃakki*; ava *mitʃakki*.
استكى *ʃiftaka* /vt and vi/ to complain. *bi-tiftiki min if-fuɤl*[a] *ɛala ṭuul* you complain about work without let-up. - ava *miftiki*.

ش ل ا ن
سيلان *ʃilaan* /coll n/ Synadontis schall, a Nile fish. - also *ʃaal*.

ش ل ب[1]
سلب *ʃalab (i)* /vt/ to swipe, pinch (in the jargon of the underworld). - vn *ʃalb, ʃalabaan*; ava *ʃaalib*; pva *maʃluub*.

ش ل ب[2]
شلبة *ʃilba* <Copt> /coll n/ type of Nile fish (Silurus mystus).
سلباية *ʃilbaaya* /n pl *-aat*/ unit noun of *ʃilba*.

ش ل ب[3]
سلبى *ʃalabi* <T *çelebi*> /adj */ *[obsol]* **1** generally excellent and in good shape. *bint' ʃalabiyya* good-looking girl. *raagil ʃalabi* generous and cheerful man. *ʃil-beeḍ ʃalabi n-nahar-da* the eggs are good and fresh today. ‖ *fiṭiir ʃalabi* a many-layered pastry folded over a centre of raisins, nuts and sweet syrup. **2** temperamental (of a man).

ش ل ب[4]
يسلب *yiʃlib* /vi, imperf only/ to spurt out, gush out (e.g., of blood). - vn *ʃalb, ʃalabaan*; ava *ʃaalib*.

ش ل ب ى ن
سلبين *ʃilbeen* /n/ infection (in animals) manifesting itself in thorny projections upon the tongue.

ش ل ت[1]
سلّوت *ʃalluut* <Copt> /n pl *ʃalaliit*/ a kick. *ḍarab-u biʃ-ʃalluut* he kicked him.
سلّت *ʃallit* /vi/ to kick (again and again). *ʃallit-lu kamaan* give him a few more kicks. - vn *taʃliit*; ava *miʃallit*.
اتسلّت *ʃitʃallit* or *ʃiʃʃallit* /vi/ (impersonal) passive of *ʃallit. ʃitʃallit luhum kitiir* they were kicked about (a lot). - iva *mitʃallit*.

ش ل ت[2]
سلته *ʃalta* <T *şilte*> /n pl *ʃilat, ʃaltaat*/ cushion (for a couch or chair).

ش ل ت[3] see ش ل ى ت : *ʃiliita*

ش ل ت ت
سلاتيت *ʃalatiit: ʃumm if-ʃalatiit [zool]* omasum, many-plies. - also *ʃumm it-talaʃiif, ʃumm il-lafaliif*.
مسلتت *miʃaltit* (also *fiṭiir miʃaltit*) /coll n/ large pastry consisting of many layers of dough and clarified butter or cream baked and eaten with cream, honey or cheese.
مسلتتة *miʃaltita* (also *fiṭiira miʃaltita*) /pl *-aat*/ unit noun of *miʃaltit*.

ش ل ح
سلح *ʃalaḥ (i, a)* /vt/ **1** to take off, remove (a garment). **2** to fire, dismiss. **3** *[Chr]* to defrock (a member of the clergy). — /vi/ **4** to become short (usually of the skirt of a garment). - vn *ʃalḥ, ʃalaḥaan*; ava *ʃaaliḥ*; pva *maʃluuḥ*.
سلّح *ʃallaḥ*[1] /n/ card game resembling snap or beggar-your-neighbour.
أسلح *ʔaʃlaḥ* /adj, pl *ʃulḥ*/ balding.
اتسلح *ʃitʃalaḥ* or *ʃiʃʃalaḥ* /vi/ passive of *ʃalaḥ* 1, 2, 3. - iva *mitʃiliḥ*.

انشلح *ʔinfalaḥ* = *ʔitfalaḥ*. - iva *minfiliḥ*.
شلّح *fallaḥ*[2] /vt/ **1a** to raise (the skirt of a garment). *fallaḥit deel fustan-ha* she lifted the hem of her dress. **1b** to uncover (by raising the skirt of a garment). *ʔil-hawa fallaḥ riglee-ha* the wind (lifted her skirt and) revealed her legs. || *ʔil-balad illi ma-yiɛrafu-k-ʃ' fiiha fallaḥ wi-gri fiiha [prov]* (you can) expose yourself and run about in the town where they don't know you. **2** to snap (a card in the game *fallaḥ*). — /vi/ **3** to flash, expose the genitals. **4** to become penniless. - vn *taflīiḥ*; ava/pva *mifallaḥ*.
اتشلّح *ʔitfallaḥ* or *ʔiffallaḥ* /vi/ passive of *fallaḥ*[2] 1, 2. - iva *mitfallaḥ*.

ش ل خ ت
شلختة *filixta* /n pl *-aat*/ <poss Yiddish> *[obsol]* large ugly woman.
شلختاية *filixtaaya* /n pl *filixtaat*/ = *filixta*.

ش ل س ت -
شلستون *filistoon* <Engl *Charleston*>: *banṭaloon filistoon* flared trousers.

ش ل ش ل
شلشل *falʃil* <prob Copt> /vi/ to pull a kerchief to and fro across the back and front of the neck as a gesture of mourning (of a woman). - vn *falʃala*; ava *mifalʃil*.
اتشلشل *ʔitfalʃil* or *ʔiffalʃil* /vi/ (impersonal) passive of *falʃil*. || *ʔin ʃa-lla yitfalʃil ɛaleeha* I hope she kicks the bucket! - iva *mitfalʃil*.

ش ل ض م
شلضومة *falḍuuma* /n pl *faladiim*/ thick lip.
مشلضم *mifalḍam* /adj/ thick-lipped.

ش ل ف see ش ل ل و ف : *falluufa*

ش ل ف ط
شلفط *falfaṭ* /vt/ to smudge, smear. *falfaṭ il-ʔalwaan bi-mayya* he blurred the colours with water. *wiff-u mfalfaṭ miḍ-ḍarb* his face is a mess from the beating. - vn *falfaṭa*; ava/pva *mifalfaṭ*.
اتشلفط *ʔitfalfaṭ* or *ʔiffalfaṭ* /vi/ to be smeared, be smudged. - iva *mitfalfaṭ*.

ش ل ق [1]
شلق *falaq* /adj invar/ ill-bred, insolent, abusive. *ʔin-niswaan if-falaq dool* those foul-mouthed broads.
شلّق *fallaq* /vi/ to behave in an insolent and abusive fashion. *ʔana miʃ faahim fallaq-li kida leeh* I don't understand why he acted so abusively toward me. - vn *taflīiq*; ava *mifallaq*.
اتشلّق *ʔitfallaq* or *ʔiffallaq* /vi/ **1** to be foul-mouthed. *ʔitfallaq ɛalayya min ɣeer sabab* he showered me with obscenities for no reason at all. **2** (impersonal) passive of *fallaq*. *ʔana miʃ min illi b-yitfallaq luhum* I'm not one to be spoken to with abusive language! - ava/iva *mitfallaq*.

ش ل ق [2]
شلق *filq* <perh Copt> /n pl *filuuq, filiqa/ [rur]* string, thin rope.

ش ل ل [1]
شلّ *ʃall (i)* /vt/ to paralyse. *ʔil-xoof ʃall-u* fear paralysed him. - vn *ʃalalaan, ʃalal*; ava *ʃaalil*; pva *maʃluul*.
شلل *ʃalal* /n/ paralysis. *ʃalal il-ʔaṭfaal* infantile paralysis, polio.
اتشلّ *ʔitfall* or *ʔiffall* /vi/ to become paralyzed. *ʔiffall' f-diraaɛ-u* his arm became paralyzed. - iva *mitfall*.
انشلّ *ʔinfall* = *ʔitfall*. - iva *minfall*.

ش ل ل [2]
شلالة *filaala* /n/ basting, tacking. *ɛaawiz filaala qabl' ma tmakkin-ha* it has to be basted before you sew it on the machine.
شلّل *fallil* /vt/ to baste, tack. - vn *taflīil*; ava/pva *mifallil*.
اتشلّل *ʔitfallil* or *ʔiffallil* /vi/ to be basted, be tacked. - iva *mitfallil*.

ش ل ل [3]
شلّة *falla* /n pl *-aat, filal*/ hank, skein.
شلّة *filla* /n pl *filal, fulal*/ group, clique. *ruḥna filla kbiira* we went in a big group. *di fillit-ak* is this the gang you hang out with?
شلّال *fallaal* /n pl *-aat*/ **1** (Nile) cataract. **2** waterfall.

ش ل ل [4] see ش ى ء [1] : *mafalla*

ش ل ل اه
شلاّه *fillaah, fallaah: fillaah ya ..., fallaah ya ...* /interj/ **1** invocation of the aid of a Muslim saint. *fillaah ya sayyid* may Sayyid (Badawi) help me! *lissa ɛala muulid il-ḥuseen talat ʔasabiiɛ - fillaah ya ḥuseen* it's still three weeks till the birthday celebration of Hussein; may Hussein enable me to take part! **2** expression of disbelief. *lamma ʔaqbaḍ il-mukafʔa ḥ-addii-k nuṣṣ-a-ha - fillaah ya mukafʔa* 'When I cash the bonus, I'll give you half.' 'A bonus! that'll be the day!' *ḥ-adfaɛ-lak kull' malliim ɛalayya - fillaah ya ḥ-adfaɛ-lak* 'I'll pay you

every penny I owe you.' 'You'll pay me! What a laugh!'

ش ل ل و
شيلّو، تشيلّو *fillu* <It> /n pl *-haat/ [mus]* cello.

ش ل ل و ف
شلّوفة *falluufa* /n pl *falaliif/ [non- Cairene]* a protruding, camel-like lip.

ش ل ن [1]
شلن *filin* <Engl *shilling*> /n pl *-aat/* five piastres, five-piastre coin.

ش ل ن [2] see ش ل ا ن : *filaan*

ش ل ن د ر see س ل ن د ر : *filindar*

ش ل ى
شلية *falya* /n pl *-aat, fawaali/* **1** earthenware vessel similar in shape to, but smaller than, a *maguur* (see Pl.A, 8), especially one used in milking cattle.

ش ل ى ت
شليتة *filiita* /n pl *falaayit/ [rur]* donkey-pannier similar to, but larger than, a *ʕabiiṭ* (see Pl.D, 4).

ش ل ى ن
شلين *filyan* <Engl *Chilean*>: *baṭṭiix filyan* type of round sweet water-melon, with dark green skin.

ش ل ى ه
شاليه *faleeh* <Fr> /n pl *-aat/* chalet.

ش م ء ن ط
اشمأنط *ʔifmaʔnaṭ* /vi/ to feel distaste, become disgusted. - vn *ʔifmiʔnaaṭ*; ava *mifmaʔnaṭ*.

ش م ب ر see ش ن ب ر

(ش م ب ن -)
شمبانزى *fambanzi* <Engl> /n pl *-aat/* chimpanzee.
شمبانوار *fambanwaar* <Fr *chambre noire*> /n/ *[phot]* darkroom.
شمبانيا *fambanya* <Fr> /n/ champagne.

ش م ت
شمت *fimit (a)* /vi/ to indulge in malicious joy, gloat. *fimit fiyya lamma ffilt* he took malicious pleasure at my expense when I failed. - vn *famaata, famataan*; ava *faamit, famtaan*.

اتشمت *ʔitfamat* or *ʔiffamat* /vi/ (impersonal) passive of *fimit*. - iva *mitfimit*.
انشمت *ʔinfamat* = *ʔitfamat*. - iva *minfimit*.
شمّت *fammit* /vt/ to arouse schadenfreude in (s.o.). *rabb-i-na ma-yfammit fiik ḥadd* may God never cause anyone to gloat at your expense. - vn *tafmiit*; ava *mifammit*.
اتشمّت *ʔitfammit* = *fimit*. - ava *mitfammit*.

ش م ح ط
شمحطى *famaḥṭi* /n pl *-yya/* tough, bully.
شمحطجى *famaḥṭagi* = *famaḥṭi*.

ش م خ
شمخة *famxa* /n/ spicy aroma (of food).
شمخيّة *fumuxiyya* = *famxa*.

ش م د ر ى
شامدوريا *famdurya* /n/ ornamental palm (Chamaedoria elegans).

ش م ر [1]
شمر *famar[1] (u)* /vt/ **1** to hitch up, raise (the skirt of a garment). **2** to uncover (by rolling up one's sleeves). *ʔufmur diraaʕ-ak* bare your arm! — /vi/ **3** to ride up (of a skirt etc.). *ʔil-fustaan famar lamma qaʕadit* when she sat down, the (skirt of her) dress rode up. - vn *famaraan, famr*; ava *faamir*; pva *mafmuur*.
شمّر *fammar[1]* /vt/ **1** to hitch up, raise, roll up (one's garments). *fammar kimaam-u* he rolled up his sleeves. *fammar il-gallabiyya w-naṭṭ* he hitched up his gown and jumped. **2** to uncover (by hitching or raising a garment). *fammar ʔiid-u* (or *diraʕ-u*) he bared his arm (by rolling up his sleeve). — /vi/ **3** to prepare to fight. - vn *tafmiir*; ava *mifammar*.
اتشمّر *ʔitfammar* or *ʔiffammar* /vi/ passive of *fammar* 1 and 2. - iva *mitfammar*.

ش م ر [2]
شمر *famar[2]* /n/ fennel. *ʔif-famar il-ḥilw* Florence fennel.
شمّر *fammar[2]* = *famar[2]*.

ش م ر [3]
مشمّر *mifammar* nonce word in the phrase *ʔil-miḥammar wil-mifammar* a specially-prepared fancy meal.

ش م ر د see ش م ر ت : *famurt*

ش م رخ

سمرخ *ʃamrax, ʃamrax* /vi/ to attain full growth, become vigorously sturdy. - vn *ʃamraxa, ʃamraxa*; ava/pva *miʃamrax, miʃamrax*.

سمروخ *ʃamruux* **1** /adj/ fully developed, strapping. – /n pl *ʃamariix*/ **2** quarterstaff, long cudgel. **3** single stalk (of dates). **4** male inflorescence (of a palm). **5** teardrop pendant (in jewelry). **6** *[coarse slang]* penis, dick.

ش م ر د

سمورد *ʃamurd* (also *ʃamurt*) /adj invar/ young, half-grown (of chickens).

ش م س [1]

سمس *ʃams* (also *sams*↓) /fem n, pl *ʃumuus*/ **1** sun. *lamma ʃ-ʃams' tiṭlaʕ mil-ɤarb* when the sun rises in the west (i.e., never). ‖*ʃams' w-ʔamar* sparkler(s). *-ʕadiww iʃ-ʃams* albino. *-kull' waaḥid ʕaarif ʃams' daar-u tiṭlaʕ mineen [prov]* each man knows best about his own affairs. **2** sunlight, sunshine.

سمسة *ʃamsa* /n/ **1** place exposed to the sun, sunny spot. *ʔaaʕid fiʃ-ʃamsa* sitting in the sun. **2** /pl *-aat*/ *[theat]* light projector.

شمسية *ʃamsaaya* /n/ = *ʃamsa* 1.

شمسى *ʃamsi* /adj/ pertaining to the sun, solar. *ʔil-magmuuʕa ʃ-ʃamsiyya*↑ the solar system. ‖*ṣuura ʃamsiyya*↑ photograph. *-ʕeeʃ ʃamsi* thick, spongy bread which is left to rise in the sun (peculiar to Upper Egypt).

شمسيّة *ʃamsiyya* /n pl *ʃamaasi, ʃamsiyyaat*/ **1** parasol, sunshade, umbrella. ‖*ʕamal iʃ-ʃiif ʃamsiyya* he fastened the shutters half-closed. *-kumm' ʃamsiyya* galabiya sleeve 55 centimetres in width. **2** round glass window or skylight (in a dome). **3** *[mus]* rosette, rose, ornamental device found on various stringed instruments (see Pl.J. 12, 26).

سمّوسة *ʃammuusa: ya ʃams' ya ʃammuusa xudi sinnit il-ḫumaar wi-haati sinnit il-ʕaruusa* children's jingle uttered on the occasion of losing a tooth.

سمّس *ʃammɪs* /vt/ to expose to the sun. *taʃmiis il-maraatib yımawwit il-baraɤiit* putting the mattresses out in the sun kills the fleas. -vn *taʃmiis*; ava/pva *miʃammis*.

اتشمّس *ʔiṭʃammis* or *ʔiʃʃammis* /vi/ **1** to get some sun, lie in the sun. *baʕd' ma niḫrit il-ʔarḍ' nsib-ha tiʃʃammis* after we plough the earth we leave it to get some sun. **2** to be exposed to the sun. - ava/iva *miṭʃammis*.

ش م س [2] see ش م م ا س : *ʃammaas*

ش م ش ر

سماسيرجى *ʃamaʃirgi* <T *çamaşırcı*> /n pl *-yya*/ *[obsol]* valet.

ش م ش م

شمشم *ʃamʃim* /vi/ to sniff around. *ʃamʃim fil-ʔakl' w-saab-u* he sniffed the food and left it (uneaten). - vn *ʃamʃama*; ava *miʃamʃim*.

¶ *ʃamʃim ʕala* to go after, as in *raaḥ yiʃamʃim ʕala ʃwayyit ʔaxbaar* he went sniffing about for some news, *ʃamʃim ʕala banaat* to run after girls.

ش م ش و ن

سمشون *ʃamʃuun* /prop n/ Samson.

ش م ط [1]

سمط *ʃamaṭ (u)* /vt/ **1** to strike, hit. *ʃamaṭt-u ʕalʔa* I gave him a beating. **2** to charge (s.o.) an exorbitant price. *ʔil-bayyaaʕ min illi hina b-yuʃmuṭ iz-zabaayin ṣaḥiih* the average vendor here really stings people. - vn *ʃamaṭaan, ʃamṭ*; ava *ʃaamiṭ*; pva *maʃmuuṭ*.

سمّاط *ʃammaaṭ* /n */ one who charges exorbitant prices.

اتسمط *ʔiṭʃamaṭ* or *ʔiʃʃamaṭ* /vi/ passive of *ʃamaṭ*. - iva *miṭʃimiṭ*.

ش م ط [2] see ش م م و ط : *ʃammuuṭi*

ش م ع [1]

شمع *ʃamʕ* /n pl *ʃumuuʕ*/ **1** wax. *ʃamʕ' xitm* sealing wax. ‖*ʃamʕ iskandaraani* beeswax. **2** white powder coating a sugar-cane stalk around the node. – /coll n/ **3** candle(s). **4** sparking plug(s).

سمعه *ʃamʕa* /unit n, pl *-aat*/ **1** a candle. ‖*da ʃamʕa mnawwara* he's a beacon to all. *-ʃayil-luhum iʃ-ʃamʕa* anxious to please them. *- daari ʕala ʃamʕit-ak [prov]* ≈ don't wear your heart on your sleeve. **2** a sparking plug. **3** *[elec]* candle (unit of light measurement). **4** motif in tent appliqué work (see Pl.H, 11). – /n pl *ʃimaʕ*/ **5** *[naut]* bitt, bollard, capstan.

شمعاية *ʃamʕaaya* = *ʃamʕa* 1.

سمعى *ʃamʕi* /adj/ waxen, waxy.

شمّاعة *ʃammaaʕa* /n pl *-aat*/ any of various devices on or by which clothes or cloths are hung (such as a coat-hanger, clothes cupboard, clothes horse, (towel) rack, clothes hook etc.).

سمّع *ʃammaʕ'* /vt/ **1a** to wax, put a wax coating on. ‖*ʃammaʕ il-fatla* ≈ he made off like greased lightning. **1b** to seal (with wax). *miʃammaʕ bi-ʃamʕ aḥmar* sealed with red wax. **2** to deal a hard blow to. *ʃammaʕ*

ik-koora fig-goon he slammed the ball into the goal. - vn *taʃmiiɛ*; ava/pva *miʃammaɛ*.

مشمّع *miʃammaɛ* **1** /adj/ waterproof, water-repellent. *kulut*^{i} *mʃammaɛ* (babies') plastic pants. **2** /coll n/ oil-cloth(s), (loosely) any waterproofed material (e.g., tarpaulin, waterproof sticking plaster, etc.). **3** /pl *-aat*/ unit noun of 2.

اتشمّع *ʔitʃammaɛ*^{1} or *ʔiʃʃammaɛ*^{1} /vi/ passive of *ʃammaɛ*^{1}. - iva *mitʃammaɛ*.

ش م ع ^{2}

شمّع *ʃammaɛ*^{2} /vi/ to become almost dry (of freshly-baked bread, and washing). - vn *taʃmiiɛ*; ava *miʃammaɛ*.

اتشمّع *ʔitʃammaɛ*^{2} or *ʔiʃʃammaɛ*^{2} = *ʃammaɛ*^{2}. - ava *mitʃammaɛ*.

ش م ع د –

سمعدان *ʃamɛidaan* /n pl *-aat*/ candlestick, candelabra.

ش م ل ^{1}

شمل *ʃimil (a), ʃamal (i)* /vt/ to include, comprise. *ʔil-fatuura b-tiʃmal kull il-mabiɛaat* the invoice includes all the sales. ‖*ʃamal ḥadd*^{i} *b-ɛenee* (or *b-karam-u*, or *b-ɛaṭf-u*) to treat someone well, look after someone's interest. - vn *ʃumuul, ʃaml, ʃamalaan*; ava *ʃaamil*; pva *maʃmuul*.

سمل *ʃaml* /n/ union, unity. *gamaɛ ʃaml-i-na* he united us, made us as one. *ʃarraqna ʃaml-u-hum* we sowed discord among them, we made them disunited.

سملة *ʃamla* /n pl *-aat*/ scarf, shawl.

سامل *ʃaamil* /adj/ complete, comprehensive.

أسمل *ʔaʃmal* /el/ more/most comprehensive.

اشتمل *ʔiʃtamal* /vt and vi/ to include, comprise. *miʃtimil (ɛala) xamas ʔagzaaʔ* comprising five parts. - iva *miʃtimil, muʃtamil*↑.

مشتملات *muʃtamalaat*↑ /pl n/ content(s).

ش م ل ^{2}

شمال *ʃimaal* **1** /n/ left (-hand side). *xallii-k ɛala ʃmaal iʃ-ʃaariɛ* keep to the left-hand side of the street. *ṣifr*^{a} *ɛala ʃ-ʃimaal* (zero written on the lefthand side) competely worthless. **2** /adj invar/ left, left-hand. *ʔin-naḥya ʃ-ʃimaal min iʃ-ʃaariɛ* the left-hand side of the street. **3** /adv/ to the left. *liff*^{i} *ʃimaal* turn left! *ʃimaal duur [mil]* left face! ‖*xad-ha ʃmaal* to go about things the wrong way. - *muxx-u mitrakkib ʃimaal* he's crazy. - *daxal fi-... ʃimaal* to attack (s.o.) with abuse, sarcasm, or biting criticism.

سمال *ʃamaal* /n/ north. *baḥr iʃ-ʃamaal* the North Sea.

سمالى *ʃamaali* /adj */ northern.

ش م ل ل

شملة *ʃamlala* /vn/ (display of) know-all manners, cocksureness.

شملول *ʃamluul* /pl *ʃamaliil*/ **1** /adj/ **1a** lively, quick. *ʔil-bint*^{i} *di lahluuba ʃamluula* this girl is clever, quick-witted. **1b** capably and vigorously pursuing many activities. **2** /n/ know-it-all, clever dick, smart aleck.

اتشملل *ʔitʃamlil* or *ʔiʃʃamlil* /vi/ to behave and act in a know-all manner, be smart-alecky. - ava *mitʃamlil*.

ش م م ^{1}

شمّ *ʃamm*^{i} *(i)* /vt/ **1** to smell, sniff. *ʃammeet riiḥit ḥaaga b-titḥiriq* I smelled the odour of something burning. *ʃamm ik-kukayiin xallaa-ni miskiin* cocaine-sniffing has made me wretched. ‖*ʃamm il-hawa* to go for a stroll, take a breath of fresh air. *-ʃamm*^{a} *ɛala ḍahr*^{i} *ʔiid-u [sarc]* to use E.S.P. *-ʃamm*^{i} *nafas-u* (1) to recover, catch one's breath, relax. (2) to start showing some spirit (of one who has been oppressed). *-ʃamm il-ḥaraara* it got a whiff of heat (i.e. it got barely hot). - *ʔin-naas bi-tʃimm-i-ni* people like me, people enjoy my company. *-ʃamm (il-xabar)* to get wind of something, as in *kull*^{i} *ma yʃimm*^{i} *(xabar) mufattiʃ bi-yiqfil* whenever he gets wind of an inspector he closes down. – /vi/ **2** to go off, spoil (of food; it is believed by some that such food has been sniffed at by a snake, thus becoming tainted with poison). **3** *[slang]* to cadge, sponge. *baqaa-lu sniin bi-yʃimm*^{a} *ɛaleena* he's been sponging off us for years. - vn *ʃamamaan, ʃamm*; ava *ʃaamim*; pva *maʃmuum*.

شمّ *ʃamm*^{2} /vn/ smelling. ‖*ʃamm in-nisiim* Egyptian spring festival and popular holiday on the Monday after Coptic Easter.

شمّة *ʃamma* /inst n, pl *-aat*/ a sniff, a whiff.

مشموم *maʃmuum* /adj/ spoiled. *ʔakl*^{i} *maʃmuum* spoiled food, food which has gone off. *maat min ʔakl*^{i} *maʃmuum* he died from (eating) bad food (for some, the explanation of such an occurrence is that a snake has sniffed the food thus tainting it with poison).

شمّام *ʃammaam*^{i} /n */ **1** narcotics sniffer. **2** cadger, sponger.

الشمّامة *ʔiʃ-ʃammaama* /prop n/ bogey-woman reputed to sniff at children with unclean faces and mouths, with the result that their faces come out in pustules (the possibility of a visit by her is accordingly used to coerce a child into keeping face and mouth clean).

مشمّ *mifamm: xad(-u) ɛala mifamm(-u)* to hustle (s.o., into action) without warning.
اتشم *ʔitfamm* or *ʔiffamm* /vi/ passive of *famm*[1]. - iva *mitfamm*.
انشمّ *ʔinfamm* = *ʔitfamm*. - iva *minfamm*.
شمّم *fammim* /vt/ **1** to cause to smell. *ʔid-duktuur fammim-ha l-ɣaaz* the doctor had her smell the gas. ‖*fammimii-ha n-naar* give it a whiff of the fire (i.e. heat it briefly over the fire). - *fammim-u hawa* (1) to take (s.o.) out for a breath of air. (2) *[slang]* to kill (s.o.), get rid of (s.o.). **2** to render unconscious (with evil intent, by administering chloroform). - vn *tafmiim*; ava *mifammim*.
اتشمّم *ʔitfammim* or *ʔiffammim* /vi/ passive of *fammim*. - iva *mitfammim*.

ش م م [2]
شمّام *fammaam*[2] /coll n/ (variety of) honeydew melon(s) (Cucumis dudaim).
شمّامة *fammaama* /unit n, pl *-aat*/ a melon (of the honeydew variety).

ش م م ا س
شمّاس *fammaas* <Syr> /n pl *famamsa*/ *[Chr]* deacon.

ش م م و ط
شمّوطى *fammuuṭi: burtuqaan fammuuṭi* a thick-skinned type of orange which appears on the market toward the end of the season.

ش م ن د -
شمندورة *famanduura* <T *şamandıra* from Gr> /n pl *-aat*/ buoy.

ش م ه و -
شمهورش *famhuurif* /prop n/ Shamhurish, the king of all demons.

ش م و ا ه
شمواه *famwaah* <Fr *chamois*> /n/ suede.

ش م ى [1]
شيمية *fimya* /n pl *-aat*/ eddy, whirlpool. - also *fiima*.

ش م ى [2] see ش ا م [2] : *famiyya*

ش م ى ز
شميز *fimiiz* <Fr *chemise*> /n pl *famaayiz*/ *[auto]* cylinder liner.

ش ن
شن *fin* <contraction of *fayʔin*>: *kull' fin-lu yifbih-in-lu [prov]* (everything has something resembling it) like to like, every Jack must have his Jill. see further under ش ى ء [2]

ش ن ب
شنب *fanab* /n pl *-aat*/ **1** moustache. *fanab-ak ʔatɋal min ḥawagb-ak* (1) you've a fine moustache. (2) you're a grown man. ‖ *fanab-u yuqaf ɛalee ş-şaqr* (or *şaqreen*) (a falcon (or two falcons) could perch on his moustache) ≈ he has a thick and luxuriant moustache (regarded as a sign of virility). - *da biɛiid ɛan fanab-ak* ≈ that's beyond you. - *(ʔin ɛamalt' kida) ʔaḥlaq fanab-i* (if you manage that) I'll cut off my moustache - I'll eat my hat! - *mara b-fanab* a spineless man. **2** *[naut]* fender.

(ش ن ب ر)
شنبر *fambar*[1] <Fr *chambre*> /n pl *fanaabir*/ inner tube.
شنبر *fambar*[2] <P *chanbar*> /n pl *fanaabir*/ any of a variety of metal frames or surrounds (e.g., frame of a lens, watch bezel, steel ribbon (used in bulk packaging), piston ring).
شنبر *fambar*[3]: *xiyaar fambar* Indian laburnum (Cassia fistula) the pods of which are used to make a laxative. - *laḥm' fambar [non-Cairene]* = *kanduuz*. - *ʔil-filuus raaḥit fambar wi-ɛambar* the money went in a flash and for God-knows-what!

ش ن ت ف
شنتف *fantif* /vt/ to primp, preen. *mifantifa ḥawagib-ha zayy' btuuɛ is-siima* primping her eyebrows like a film star. - vn *fantafa*; ava/pva *mifantif*.
شنتوفة *fantuufa* /n pl *-aat, fanatiif*/ a tiny bit, a modicum.
اتشنتف *ʔitfantif* or *ʔiffantif* /vi/ **1** passive of *fantif*. **2** to preen oneself, primp. - ava/iva *mitfantif*.

ش ن ت ى
شانتى *fantii* <*Chantilly* (in France)>: *kireem fantii* whipped cream.

ش ن ت ى -
شنتيان *fintiyaan* <T *çintiyan*> /n pl *-aat*/ *[obsol]* baggy trousers (worn by women as an undergarment).

ش ن ج
شنج *fannig* /vt/ to cause to have convulsions, cause

cramps or spasms in. *ʕil-imtiḥaan huwwa lli ʃannig-u* the exam was the thing that made him all uptight. *raqabt-i miʃanniga* I have a stiff neck. *ɛaṣab miʃannig* twitching nerves. - vn *taʃniig*; ava/pva *miʃannig*.
اتشنّج *ʕitʃannig* or *ʕiʃʃannig* /vi/ to have convulsions, have cramps or spasms. ‖ *ma-tiʃʃannig-lii-ʃ* don't get in such a state with me! - vn *taʃannug*; ava *mitʃannig*.
تشنّج *taʃannug* /n pl *-aat*/ spasm, convulsion. ‖ *taʃannug ɛaṣabi* epilepsy.

ش ن ج ا ر
شنجار *ʃingaar* <Engl> /n pl *ʃanagiir*/ shinguard.

ش ن ج ى
شنجى *ʃingi* <T *üçüncü*> /n/ third one in a series.

ش ن د
شند *ʃind* /n pl *ʕiʃnaad, ʃunuud*/ *[naut]* first and principal transverse timber supporting the half-deck of a Nile sailing boat.

ش ن د ل
شندل *ʃandil* /vt/ to get (s.o.) into a muddle. - vn *ʃandala*; ava/pva *miʃandil*.
اتشندل *ʕitʃandil* or *ʕiʃʃandil* /vi/ to get into a muddle. - ava *mitʃandil*.

ش ن ش see ش ن ى ش : *ʃiniiʃa*

ش ن ش ن
شنشن *ʃanʃin* /vi/ **1** to produce a sound which reveals a defect in the constituent material (e.g., buzzing of a cracked lute, sound of badly-cast metal when tapped). **2** to jingle, rattle. - vn *ʃanʃana*; ava *miʃanʃin*.
مشنشن *miʃanʃin* /adj/ falling apart, dilapidated. *ɛarabiyya mʃanʃina* rattle-trap car.

ش ن ط [1]
شنط *ʃanaṭ (u)* /vt/ to tie firmly. *ʃanaṭ ʕiday-ya bil-ḥabl* he bound my wrists together with the rope. - vn *ʃanṭ*; ava *ʃaaniṭ*; pva *maʃnuuṭ*.
شنيطة *ʃineeṭa* /n/ loop. *rabaṭ if-ʃiriiṭa ɛuqda w-ʃineeṭa* he tied the ribbon in a bow.
اتشنط *ʕitʃanaṭ* or *ʕiʃʃanaṭ* /vi/ to be tied firmly. - iva *mitʃiniṭ*.
انشنط *ʕinʃanaṭ* = *ʕitʃanaṭ*. - iva *minʃiniṭ*.

ش ن ط [2]
شنطة *ʃanṭa* <T *çanta*> /n pl *ʃunaṭ*/ **1** satchel, briefcase, handbag. **2** suitcase. ‖ *tuggaar if-ʃanṭa* persons who traffic goods in suitcases between countries. **3** trunk or boot (of a car).

ش ن ط [3] see ش ن ى ط : *ʃiniiṭ*

ش ن ع
شناعة *ʃanaaɛa* /n/ hideousness. *tagriba f-muntaha ʃ-ʃanaaɛa* an absolutely horrible experience.
شنيع *ʃaniiɛ* /adj pl *ʃunaaɛ*/ terrible, frightful. *ḥadsa ʃaniiɛa* terrible accident. *wiʃʃ[i] ʃaniiɛ* hideous face. *da-nta ʃaniiɛ* you're terrible!
أشنع *ʔaʃnaɛ* /el/ more/most terrible.
شنّع *ʃannaɛ* /vi/ to speak slanderously. *ʃannaɛu ɛaleeha lamma ṭilɛit maɛaa* they slandered her when she went out with him. - vn *taʃniiɛ*; ava *miʃannaɛ*.
اتشنّع *ʕitʃannaɛ* or *ʕiʃʃannaɛ* /vi/ (impersonal) passive of *ʃannaɛ*. *ʕitʃannaɛ ɛalee ktiir* he was much maligned. - iva *mitʃannaɛ*.

ش ن ف [1]
شناف *ʃinaaf* /unit and coll n/ nose ring (attached to the outer side of a nostril).
شنّف *ʃannif* /vt/ to embellish (the nose) with a *ʃinaaf*. - vn *taʃniif*; ava/pva *miʃannif*.
اتشنّف *ʕitʃannif* or *ʕiʃʃannif* /vi/ passive of *ʃannif*. - iva *mitʃannif*.

ش ن ف [2]
شنف *ʃanaf (i)* <perh Copt> /vi/ to sniff, sniffle. - vn *ʃanf*; ava *ʃaanif*.

ش ن ف [3]
شنف *ʃinf* <Copt> /n pl *ʕiʃnaaf, ʃinaaf, ʃinuuf, ʃinúfa*/ **1** flexible basket, hemp sack (generally used for carrying straw by donkey or camel). **2** *[rur]* dummy, oaf.

ش ن ق
شنق *ʃanaq (u)* /vt/ to execute by hanging. - vn *ʃanq*; ava *ʃaaniq*; pva *maʃnuuq*.
اتشنق *ʕitʃanaq* or *ʕiʃʃanaq* /vi/ to be hanged. - iva *mitʃiniq*.
شنّق *ʃannaq* /vt/ to hang (a number of people). - vn *taʃniiq*; ava *miʃannaq*.
اتشنّق *ʕitʃannaq* or *ʕiʃʃannaq* /vi/ to be hanged (of a number of people). - iva *mitʃannaq*.

ش ن ك ح
شنكح *ʃankaḥ* /vi/ to become sloppy or unkempt. *bint[i] mʃankaḥa f-libs-a-ha* a sloppily dressed girl. - vn *ʃankaḥa*; ava *miʃankaḥ*.

اتسنكح ʔitʃankaħ or ʔiʃʃankaħ = ʃankaħ. - ava mitʃankaħ.

ش ن ك ر

سنكر ʃankar /vt/ *[metal]* to scribe, mark out. - vn ʃankara; ava/pva miʃankar.

شنكار ʃinkaar /n/ *[metal]* **1** trace, mark made in scribing. **2** *(qalam)* ʃinkaar scribing-tool, scriber.

اتشنكر ʔitʃankar or ʔiʃʃankar /vi/ passive of ʃankar. - iva mitʃankar.

ش ن ك ل

شنكل ʃankal <T *çengel* from P> /n pl ʃanaakil/ **1** hook. ʃankal if-fibbaak window hook. ‖ *bi-ylaʕʕab-ha ʕala ʃ-ʃanaakil* he gives her a hard time. **2** technique in boxing or fighting, consisting of tripping the opponent (by using one's leg to hook the opponent's ankle). *xad ʃankal* he was tripped.

سنكل ʃankil /vt/ **1** to trip, trip up. **2** to hook open (e.g., a door or window). - vn ʃankala; ava miʃankil.

اتشنكل ʔitʃankil or ʔiʃʃankil /vi/ **1** to trip, be tripped. **2** to be hooked open. - ava/iva mitʃankil.

ش ن ن [1]

سنّة ʃanna: ʃanna w-ranna hullabaloo and clamour. ʕamaluu-lu ʃanna w-ranna they made a big fuss over him, they made a lot of noise about him. *raagil luh ʃanna w-ranna* a man who creates a stir wherever he goes, i.e. a famous and glamorous man.

ش ن ن [2] see م ش ن ن : miʃanna

ش ن ه ف

سنهف ʃanhif /vi/ to sniffle (in crying). - vn ʃanhafa; ava miʃanhif.

اتشنهف ʔitʃanhif or ʔiʃʃanhif = ʃanhif. - vn tiʃanḥiif; ava mitʃanhif.

ش ن و ا ن

شنوان ʃinwaan <perh Fr *chinois*> /n/ Chinese-style carpet.

ش ن و ا ه

سنواه ʃinwaah <Fr *chinois*> /adj invar/ in the Chinese style.

ش ن ي

مشنى miʃanni: *la mhanni wala mʃanni* see *hanna*.

ش ن ى ر

شنيور ʃanyuur <prob Fr *chignole*> /n pl ʃanayiir/ *[mech]* drill.

سنير ʃanyar /vt/ *[slang]* to devastate, wipe out. ʔil-imtiħaan da ʃanyar-ni that exam wiped me out. ʃanyart-u fil-munaqʃa I destroyed him in the discussion. - vn ʃanyara; ava/pva miʃanyar.

اتشنير ʔitʃanyar or ʔiʃʃanyar /vi/ *[slang]* to be devastated, be wiped out. ʔiz-zamaalik itʃanyar fil-matʃ' btaaʕ ʔimbaariħ the Zamalek team was annihilated in yesterday's match. - iva mitʃanyar.

ش ن ى ش

سنيشة ʃiniiʃa /n pl ʃanaayiʃ/ **1** hole made in a wall during construction or installation (e.g., for fastening scaffolding to a wall). **2** niche.

ش ن ى ط

شنيط ʃiniiṭ: ʃiniiṭ il-ʕafariit the other end of the world, as in ʔhuwwa ħa-ywaddii-k fi-ʃniiṭ il-ʕafariit he'll take you to God knows where!

ش ن ى ه

شينيه ʃineeh <Fr *chiné*> /adj invar/ tinted (of paper).

ش ن ى و ه

سينيوه ʃinyooh <Fr> /n pl -aat/ chignon.

ش ه ب

سهاب ʃihaabˀ /n pl ʃuhub/ shooting star, meteor.

ش ه ب ن –

سهبندر ʃahbandar <P *shâh-bandar*>: ʃahbandar it-tuggaar *[obsol]* chief merchant.

ش ه د [1]

سهد ʃihid *(a)* /vi/ to give evidence, attest. ʃihdu ʕalee they bore witness against him. miin ħa-yiʃhad maʕaaya who will testify in my favour? ‖ *miin yiʃhad lil-ʕaruusa (ɣeer ʔumm-a-ha) [prov]* (who will testify to the (beauty of the) bride other than her mother) ≈ testimony from an interested party is likely to be biased. - vn ʃihaada, ʃahaada; ava ʃaahid; pva maʃhuud.

سهادة ʃihaada, ʃahaada /n/ **1** testimony. ‖ ʃihaadit ʔisbaat testimony for the prosecution. - ʃihaada zuur perjury. - ʔiʃ-ʃihaada li-llaah (witnessing belongs to God) said to strengthen a positive statement, as in ʔiʃ-ʃihaada li-llaah il-ʔakl' da ħilw ≈ by God, that's good food! **2** ʔiʃ-ʃihaada (also ʔiʃ-ʃihadteen) the Muslim creed, i.e. laa ʔilaaha ʔilla llaah muħammadun rasuulu

llaah there is no god but God (and) Muhammad is his Messenger. **3** /pl *-aat, ʃahaayid↓*/ **3a** diploma. **3b** certificate. *ʃihaadit milaad* birth certificate.

ساهد *ʃaahid*[1] /n pl *ʃuhuud, ʃuhhaad↓*/ **1** witness. *ʃaahid in-nafy* witness for the defence. *rabb-u-na ʃaahid* God is my witness, as God is my witness ...! — /pl *ʃawaahid*/ **2** indication, sign. **3** *[lit]* citation, quotation. **4** *[Isl]* gravestone, headstone. — **5** /no pl/ thirty-third or sixty-sixth bead on a *sibḥa*. **6** peg on the yoke of a plough (see Pl.D, 12).

¶ *ʃif-ʃaahid* to cut it short ..., as in *ʃif-ʃaahid ruḥt iftareet ʕarabiyya* in short, I went and bought a car.

شهيد *ʃahiid, ʃihiid* /n pl *ʃuhada, ʃuhadaaʃ*/ **1** martyr. *sanit if-ʃuhada* the year of the Martyrs (283 A.D. - the starting point of the Coptic calendar). **2** casualty.— /no pl/ **3** Bearer of witness (epithet of God).

مشهد *maʃhad* /n pl *maʃaahid*/ **1** scene. *ʃil-maʃhad il-xitaami* the final scene. **2** funeral procession. **3** shrine.

شهّد *ʃahhid* /vt/ **1** to call as a witness, call to testify. **2** to cause to witness. *ʃahhidt*[a] *ʕaleek ʃaxuu-k* I called your brother's attention to (what) you (have been doing). - vn *taʃhiid*; ava *miʃahhid*.

اتشهّد *ʃitʃahhid* or *ʃiʃʃahhid* /vi/ passive of *ʃahhid*. - iva *mitʃahhid*.

ساهد *ʃaahid*[2] /vt/ to observe, see, witness. *miin ʃaahid il-ḥadsa* who saw the accident? - vn *muʃahda, miʃahda*; ava *miʃaahid*.

مشاهد *muʃaahid* /n */ eyewitness, spectator, onlooker.

اتشاهد *ʃitʃaahid* or *ʃiʃʃaahid* /vi/ **1** to be seen, be observed. **2a** to bear witness to God and Muhammad, utter the *ʃihaada*. *ʃitʃaahid ʕala* to pronounce the *ʃihaada* over a dying person. ‖ *ʃiʃʃaahid ʕala nafs-ak* ≈ say your prayers! (i.e. I'm going to kill you). **2b** to utter the *ʃihaada* as an expression of relief. *ʃiʃʃahidna lamma d-duktuur waṣal* we were quite relieved when the doctor arrived. - ava/iva *mitʃaahid*.

استسهد *ʃistaʃhid* /vi/ **1** to seek a witness. *ʃistaʃhidt*[i] *bii* I called him as a witness. **2** to be martyred, die a martyr. - vn *ʃistiʃhaad*; ava *mistaʃhid*.

ش ه د [2]

سهد *ʃahd* /n/ **1** honey. *kalaam-u zayy if-ʃahd* ≈ butter wouldn't melt in his mouth. **2** /coll/ honeydew melon(s).

سهدة *ʃahda* /unit n, pl *-aat*/ a honey-dew melon.

سهداية *ʃahdaaya* = *ʃahda*.

ش ه ر [1]

شهر *ʃahr*[1] /n pl *ʃuʃhur, ʃuhuur, ʃuhúra*/ month. *talatt uʃhur* three months. *ʃif-ʃahr illi faat* last month. ‖ *ʃahr*[a] *ʕasal* honeymoon. *-ʃahr*[a] *ʕasal wi-ʃahr*[i] *baṣal* ups and downs.

شهرى *ʃahri* /adj */ monthly. *murattab ʃahri* monthly salary.

¶ *ʃahriyyan* /adv/ monthly.

شهريّة *ʃahriyya* /n pl *-aat*/ monthly pay, monthly wages.

مشاهرة *muʃahra* /adv/ monthly.

ش ه ر [2]

سهر *ʃahar (i)* /vt/ **1** to make famous. *ʃik-kitaab da ʃahar-u* that book made him famous. **2**↑ to make a declaration of. *ʃahar ʃiflaas-u* he declared himself bankrupt. **3** to put a spell of barrenness on (a woman, by entering into her presence during the daytime of the forty-day period after her giving birth, carrying, e.g., jewels, fresh meat or the first-fruits of the season). - vn *ʃahr, ʃaharaan*; ava *ʃaahir*; pva *maʃhuur*.

شهر *ʃahr*[2] verbal noun of *ʃahar* 2. ‖ *ʃif-ʃahr il-ʕaqaari* the notary office, at which civil marriages and ownership of property are registered.

شهرة *ʃahra* /n pl *-aat*/ **1** instance noun of *ʃahr*[2]. **2** rash, skin eruption (thought to be caused by the evil eye).

مشهور *maʃhuur* /adj */ famous, well known.

سهرة *ʃuhra* /n/ fame, repute. *ʃil-furn*[i] *waaxid ʃuhra kwayyisa* the bakery has a good name. ‖ *ʃism*[i] *ʃuhra* professional name, or name other than a given name, by which one is known.

سهير *ʃahiir*↑ /adj */ famous. ‖ *ʃif-ʃahiir bi-* (widely) known as ..., as in *ʃumm*[i] *kalsuum if-ʃahiira bis-sitt* Umm Kalthum, known as *ʃis-sitt*.

أسهر *ʃaʃhar*[1] /el/ more/most famous.

اتشهر *ʃitʃahar* or *ʃiʃʃahar* /vi/ **1** passive of *ʃahar*. **2** to become well known, become famous. - ava/iva *mitʃihir*.

انسهر *ʃinʃahar* = *ʃitʃahar*. - ava/iva *minʃihir*.

ساهر *ʃaahir* /vt/ = *ʃahar* 3. - vn *miʃahra, muʃahra*; ava *miʃaahir*.

اتساهر *ʃitʃaahir* or *ʃiʃʃaahir* /vi/ passive of *ʃaahir*. - iva *mitʃaahir*.

أسهر *ʃaʃhar*[2] /vt/ **1** to profess, confess one's faith in. ‖ *ʃaʃharit ʃislam-ha* she became a Muslim. **2**↑ to exhibit (s.th.) for sale. - vn *ʃifhaar*; ava *miʃhir, muʃhir*.

استهر *ʃiftahar* /vi/ to become famous. *ʃiṣ-ṣiʕiid bi-yiftihir bi-raqaṣaat il-ʕaṣaaya* Upper Egypt is famous for stick dances. - vn *ʃiftihaar*; ava *miftihir*.

ش ه ق [1]

سهق *ʃahaq, ʃihiq (a)* /vi/ **1** to catch one's breath, gasp (particularly when surprised or shocked). *ʃahaqit lamma ʃaafit ig-garḥ* she gasped when she saw the

wound. **2** to exert influence by means of the evil eye. *ʕinti b-tiʃhaqi ɛal-waad kida leeh* why are you putting the evil eye on the boy (by, e.g., gasping in admiration at him)? - vn *ʃahaqaan, ʃahq, ʃahiiq*; ava *ʃaahiq*.

شهقة *ʃahqa* /n pl *-aat*/ **1** instance noun of *ʃahq*. **2** rash, skin eruption (thought to be caused by the evil eye).

شهيق *ʃahiiqˀ* /n/ inhalation. *bi-yaaxud ʃahiiq* he takes a breath.

ش ه ق (²

شاهق *ʃaahiq* /adj/ tall, towering, lofty.

شاهق *ʃaahiq* /adj/ intense, bright (of colours). *ʕabyaq ʃaahiq* an intense white, a dazzling white.

ش ه ل

شهل *ʃihil (a)* /vi/ to become lively, come alive. *ʕiʃhal ʃiwayya* get a move on! - vn *ʃahalaan*; ava *ʃaahil*.

شهّل *ʃahhil* **1** /vt/ to speed up, hurry up. *ʃahhili l-ʕakl' ʃwayya* hurry up the food a bit. ‖*ʃahhil-ni ʕana l-ʕawwil* attend to my business first. **2** /vi/ to hurry. *ʃahhil ʃiʃ-ʃuɣlᵃ ɛaʃaan yixlaṣ badri* he worked fast in order to finish early. - vn *taʃhiil*; ava/pva *miʃahhil*.

اتشهّل *ʕitʃahhil* or *ʕiʃʃahhil* /vi/ **1** to be hurried. **2** to hurry, be in a hurry. - ava/iva *mitʃahhil*.

ش ه م

سهم *ʃahm* /adj invar/ gallant, decent, gentlemanly.

سهامة *ʃahaama* /n/ gallantry, decency.

ش ه ن ا ز

شهناز *ʃahnaaz* <P *shah-nâz*> /n/ *[mus]* (name of the note) C sharp.

ش ه و see **ش ه ى ¹** : *ʃahwa, ʃahwaani*

ش ه ى ¹

شهوة *ʃahwa* /n pl *ʃahawaatˀ*/ desire, lust.

شهوانى *ʃahwaani* /adj/ lustful, carnal.

شهي *ʃahi* /adj/ delicious, appetizing.

شهيّة *ʃahiyya* /n/ **1** appetite. *ma-luu-ʃ ʃahiyya lil-ʕakl* he has no appetite for food. *ʃaatiḥ iʃ-ʃahiyya* appetizer. **2**↓ orgasm.

أشهى *ʔaʃha* /el/ more/most appetizing, delicious etc.

شهّى *ʃahha* /vt/ to awaken desire or appetite in (s.o.). - vn *taʃhiyya*; ava *miʃahhi*.

مشهّيات *muʃahhiyyaat* /pl n/ hors d'oeuvres.

اتشهّى *ʕitʃahha* or *ʕiʃʃahha* /vi/ passive of *ʃahha*. - iva *mitʃahhi*.

اشتهى *ʕiʃtaha* /vt/ to desire, have an appetite for, crave. *ɛaṭ-ṭarabeeza fii kullˀ ma tiʃtihii n-nafs* there is everything on the table your soul could desire. - vn *ʕiʃtiha*; ava *miʃtihi*.

ش ه ى ² see **ش ا ه ى** : *ʃaahi*

ش و ا ل

شوال *ʃuwaal, ʃiwaal* <P *juwâl*> /n pl *-aat, ʃiwla, ʃiwla*/ **1** large sack. *ʃiwaal dura* sack of corn. ‖*raagil zayy iʃ-ʃuwaal* a man without a will of his own. **2** plain loose dress (e.g., maternity pinafore).

ش و ب ¹

شايبة، شائبة *ʃayba* /n pl *ʃawaayib*/ blemish, impurity. *ʃawaayib fil-mayya* impurities in the water.

ش و ب ² see **ش ب ب ²** : *ʃubb*

ش و ب ش

شوبش *ʃoobaʃ¹* /interj/ call for *nuqṭa* uttered by performers during celebrations (such as weddings).

شوبش *ʃoobaʃ²* /vi/ to call *ʃoobaʃ*. *qaɛad yiʃoobaʃ ma-ḥaddˀ-ʃ saʕal fii* he kept saying *ʃoobaʃ* but nobody paid any attention to him. - vn *miʃobʃa*; ava *miʃoobaʃ*.

ش و ت see **ش و ط ¹** : *ʃaat, ʃoota, ʃawwit*

ش و ح ¹

شوّح *ʃawwaḥ¹* **1** /vt/ to cast, hurl, fling (over a large distance or area). ‖*ʃawwaḥ-ha min wara ḍahr-ak* don't worry about it! **2** /vi/ to wave, gesticulate. *miin illi b-yiʃawwaḥ hinaak da* who's that waving over there? ‖*ʃawwaḥ fi-wiʃʃ-i* he treated me without respect. - vn *taʃwiiḥ*; ava/pva *miʃawwaḥ*.

اتشوّح *ʕitʃawwaḥ¹* or *ʕiʃʃawwaḥ¹* /vi/ to be cast, hurled or flung (over a large distance or area). - iva *mitʃawwaḥ*.

ش و ح ²

شوّح *ʃawwaḥ²* <perh Copt> /vt/ to sear (e.g., meat), sauté (e.g., vegetables, rice). - vn *taʃwiiḥ*; ava/pva *miʃawwaḥ*.

اتشوّح *ʕitʃawwaḥ²* or *ʕiʃʃawwaḥ²* /vi/ to be seared, be sautéed. - iva *mitʃawwaḥ*.

ش و ر ¹ see also **ء ش ر**

شار *ʃaar¹ (u)* /vt/ to seek advice of. *laazim ʕaʃuur muḥaami fil-ḥikaaya di* I must seek the advice of a lawyer on this matter. - vn *ʃoora*; ava *ʃaayir*.

شار *ʃaar² (u, i)* /vi/ to give advice. *ʕil-muḥaami ʃaar ɛalayya ʕaruuḥ lil-maḥkama* the lawyer advised me to go to court. - vn *ʃoora*; ava *ʃaayir*.

شورة *foora* /n/ a piece of advice. *miin faar ɛaleek bif-foora l-mihabbiba-di* whoever gave you this rotten advice!
شارة *faara* /n pl *-aat*/ **1** badge, emblem. **2** *faraat* /pl n/ insignia.
شورى *fuura*↑ /n/ consultation. *maglis if-fuura* advisory council.
مشورة *mafuura* /n/ consultation.
شوّر *fawwar*[1] /vi/ to make a sign with the hand. *fawwar ɛala l-bahaayim timfi* he waved the livestock on. - vn *tafwiir*; ava *mifawwar*.
شاور *faawir* **1** /vt/ to consult, take counsel with. *kaan laazim tifawir-na qabl*[i] *ma titgawwiz* you should have consulted us before getting married. *ḥ-afaawir ɛaql-i* I'll think matters over. **2** /vi/ to gesture, make a sign with the hand. *fawir-lu ɛalayya mif-fibbaak* he pointed me out to him from the window. *fawir-li ɛala buqq-u yaɛni kaan raayiḥ yitɤadda* he pointed to his mouth meaning he was going to lunch. *huwwa mifaawir liiki* is he waving to you? - vn *mifawra*; ava *mifaawir*.
اتشاور *ʔitfaawir* or *ʔiffaawir* /vi/ to consult one another. - vn *tafaawur*↑; ava *mitfaawir*.
أشار *ʔafaar*↑ /vi/ **1** to allude, refer. *ʔilli ʔafarna ʔilee saabiqan* that to which we alluded previously. **2** to give indication. *bi-tfiir lil-waqt* it indicates the time. **3** to give advice, make a recommendation. *ʔafaaru b-ʔeeh* what did they advise? - vn *ʔifaara*; ava *mufiir*; pva *mufaar*.
إشارة *ʔifaara* /n/ **1** /vn/ ‖ *silaaḥ il-ʔifaara [mil]* the signal corps. - *rahn ifart(-u)* at (s.o's) beck and call. **2** /pl *-aat*/ indicator, signal. *ʔifaarit qabaab* foghorn. *ʔifaarit (ɛarabiyya)* signal indicator (of a car). *ʔifaarit (muruur)* traffic-light. *ʔifaraat yadawiyya* hand signals. *ʔifaara tilliɤrafiyya* telegram. **3** /pl *ʔafaayir*/ **3a** sign. *ʔil-ḥubb*[i] *bi-ykun-lu ʔafaayir* (love has its signs) ≈ you can tell when someone is in love. **3b** mark, blemish (in magic). *ʔil-ʔasyaad ṭalbiin farxa min ɤeer ʔifaara* the spirits demand a hen without blemish (i.e., all of one colour, unmarked in any way).
أشارجي *ʔafargi, ʔifargi* /n pl *-yya*/ signalman. *ʔafargi fis-sikka l-ḥadiid* railway signalman. *ʔafargi muruur* traffic policeman.
مشير *mufiir* /n */ **1** field marshal (Br.), general of the Army (U.S.). **2** *mufiir baḥri* admiral of the fleet.
استشار *ʔistafaar* /vt/ to seek advice of, consult. ‖ *ʔallaah yilɛan illi faar wi-stafaar* God damn everyone who brought this business about (said, e.g., of an unhappy marriage). - vn *ʔistifaara*; ava *mistifiir, mustafiir*; pva *mustafaar*.
استشارة *ʔistifaara* /n pl *-aat*/ return visit to a doctor to check on the course of treatment prescribed as the result of a previous examination (usually without the payment of additional fees).
مستشار *mustafaar* /n */ **1** adviser, counsellor, consultant. **2a** *[leg]* judge of the Court of Appeal. **2b** *[dipl]* counsellor. **2c** *[pol]* chancellor.

ش و ر [2]
شوار *fiwaar* /n pl *-aat*/ trousseau (including furniture, furnishings and household equipment).
شوّر *fawwar*[2] /vt/ to provide (a bride) with the *fiwaar*. - vn *tafwiir*; ava/pva *mifawwar*.
اتشوّر *ʔitfawwar* or *ʔiffawwar* /vi/ to get together the *fiwaar* (of a girl about to be married). - ava *mitfawwar*.

ش و ر [3] see **م ش و ر** : *mifwaar, mafwar*

ش و ر ق see also **ش ر و ق**
شورق *fawraq* /vi/ to stoke a fire until the flames enter the *faruuqa*. - vn *fawraqa*; ava/pva *mifawraq*.

ش و ر م
شاورمة *fawirma* <T *çevirme*> /n/ sliced lamb grilled on a vertical spit.

ش و ر ى
شورى *fuuri* <T *şurî* from P> /n/ *[mus]* mode in Arabic music beginning on D and having E half flat and A flat. - see also *qargaɤaar*.

ش و ش [1]
شوش *fuuf* **1** /coll n/ corn tassel(s). **2** /n/ corn silk.
شوشة *fuufa* <Copt> /n pl *-aat, fuwaf, fawaafi*/ **1** /unit n/ a corn tassel. **2a** forelock. ‖ *waaqiɛ li-fuft-u* ≈ he's in up to his ears, he's in deep. **2b** crest (of a bird). **2c** top (of a tree).

ش و ش [2]
شوّش *fawwif* /vt/ **1** to blur, cause to be vague. *fikra mfawwifa* a confused idea. — /vi/ **2** to cause interference (in radio waves etc.). **3** to spread slanderous rumours. - vn *tafwiif*; ava/pva *mifawwif*.
تشويش *tafwiif*↓ /n/ syphilis.
مشوّش *mifawwif* /adj */ syphilitic.
اتشوّش *ʔitfawwif* or *ʔiffawwif* /vi/ passive of *fawwif*. - iva *mitfawwif*.

ش و ش [3] see **ش و ى ش** : *fiweef, fuweef, fawiif*

ش و ش ر
شوشر *fawfar* /vi/ **1** to create interference. *ʔiṣ-ṣoot*

kiwayyis bass' fii fawfara fiṣ-ṣuura the sound is fine but there's interference in the picture. *ʕaxuu-k bi-yzaakir ma-tfawfar-f' ɛalee* your brother is studying, don't disturb him. **2** to spread slanderous rumours. - vn *fawfara*; ava/pva *mifawfar*.

اتشوسر *ʔitfawfar* or *ʔiffawfar* /vi/ (impersonal) passive of *fawfar*. *mitfawfar ɛaleehum* they are the victims of vicious slander. - iva *mitfawfar*.

ش و ط [1]

شاط *faaṭ'* (also *faat) (u)* <Engl *shoot*> /vt/ to kick, shoot, serve (a ball). *faaṭ ik-koora fig-goon* he shot the ball into the goal. - vn *fawaṭaan, fooṭ*; ava *faayiṭ*.

سوطة *fooṭa'* (also *foota*) /inst n, pl *-aat*/ a kick, a shot, a serve.

سوّيط *fawwiiṭ* /n pl *fawwiiṭa*/ good kicker, good server (of a ball player).

اتساط *ʔitfaaṭ* or *ʔiffaaṭ* /vi/ to be kicked, shot, or served (of a ball). - iva *mitfaaṭ*.

انساط *ʔinfaaṭ* = *ʔitfaaṭ*. - iva *minfaaṭ*.

سوّط *fawwiṭ* (also *fawwit*) /vi/ to kick, shoot, or serve repeatedly. *ʔil-huguum ik-kuwayyis laazim yifawwiṭ fig-goon* a good centre-forward must keep shooting at the goal. - vn *tafwiiṭ*; ava *mifawwiṭ*.

اتسوّط *ʔitfawwiṭ* or *ʔiffawwiṭ* /vi/ (impersonal) passive of *fawwiṭ*. *mitfawwiṭ ɛaleeh kuwar kitiir* a lot of balls were shot at him (i.e. the goalie). - iva *mitfawwiṭ*.

ش و ط [2]

سوط *fooṭ* /n pl *ʔafwaaṭ*/ **1a** half (in football match, hockey match etc.). **1b** set (in squash, tennis etc.). **1c** single race (in horse-racing). **1d** round (in a game). **2** (single) circumambulation.

سوطة *fooṭa*[2] <prob Copt> /n/ Newcastle disease (affecting fowls). ‖*gat-ak fooṭa* ≈ a plague upon you!

سوّاطي *fawwaaṭi: lamba fawwaaṭi* simple oil-lamp without a chimney. (see Pl.B, 2).

ش و ف

ساف *faaf (u)* /vt/ **1** to see, perceive. *fuft' bet-na g-gidiid* have you seen our new house? *ʔinta fayif-ni b-abaɛtar-hum* do I look to you as if I can afford to throw money around? *ɛala madad* (or *madd) if-foof* as far as the eye can see. ‖*nifuuf wiff-ak bi-xeer ʔin faaʔ allaah* (phrase said to one or by one departing on a journey) ≈ God willing, we'll see you soon. *-fuft' baqa leeh ʔana ma-kunt'-f ɛayz-ak tiruuḥ* do you see now why I didn't want you to go? *-fuuf (baqa)* see here, now, as in *fuuf baqa ʔik-kalaam da ma-yṣaḥḥ'-f* see here, now, that sort of talk won't do! *-fuuf ya (ʔax-i* etc.) just imagine, would you believe it? as in *fuuf ya ʔax-i b-tidris il-yabaani* just imagine - she's studying Japanese! **2** to see, view. *ma-fuft'-f il-film' da* I didn't see that film. *fayfa b-yiɛmil ʔeeh* can you see what he's doing? ‖*la min faaf wala min diri* ≈ very discreetly. **3a** to see, meet with. *ma-bi-nfufuu-f kitiir* we don't see him very often. *nifuf-kum baɛdeen* we'll see you later. **3b** to meet with, experience. *ɛumr-i ma-fuft il-maraḍ* I've never been sick. ‖*ʔilaah-i ma-tfuuf* ≈ may you never have to experience ..., God spare you .... **4** to deem right. *ʔilli bi-tfuuf-u ʔinta* whatever you think is best. **5** to give attention to. *fuuf ḥaal-ak* look after yourself. *bi-yfuuf fuṛl-u kwayyis* he does his job well. *fuuf fuṛl-ak* mind your own business! *laazim tifuuf maṣlaḥit il-ɛiyaal* you must look to the interest of the children. ‖*kunt' b-afuuf mazaag-i kwayyis* I used to indulge myself (in everything). *-faaf(-u) bi-ḥaaga* to give (s.o.) a gratuity or bribe, as in *ḥa-nfuf-hum bi-ḥaaga ɛafaan yiktibu taqriir kiwayyis* we'll give them a little something so they'll write a good report. *-faayif nafs-u* (or *rooḥ-u*) he is conceited. **6** to find, ascertain. *raagiɛ fuṛl-i w-fuuf il-ṛalaṭaat illi ɛamalt-a-ha* go over my work and find out what mistakes I've made. *fuuf mawaɛiid is-sikka l-ḥadiid* look up the train schedules. ‖*taɛaala ʔafuf-lak il-baxt* let me tell your fortune. **7** to find, secure. *fuf-lak faqqa w-ʔagib-lak ɛaruusa* find yourself an apartment and I'll get you a bride. *nifuuf lina ḥall' maɛaaha* let's try to work out something with her. *huwwa lli faf-li wasṭa gamda* he's the one who got me some effective pull. ‖*fuf-lak foofa* do something about it, find yourself a way out. — /vi/ **8** to (be able to) see. *ma-bi-nfuf-f' fiḍ-ḍalma* we can't see in the dark. - vn *fawafaan, foof*; ava *faayif*.

شوفة *foofa* /n pl *-aat*/ solution, way out.

اتساف *ʔitfaaf* or *ʔiffaaf* /vi/ passive of *faaf*. - iva *mitfaaf*.

انساف *ʔinfaaf* = *ʔitfaaf*. - iva *minfaaf*.

سوّف *fawwif* /vi/ **1** to cause to see or view. **2** to cause to perceive or understand. **3** to cause to meet with or experience. - vn *tafwiif*; ava/pva *mifawwif*.

اتسوّف *ʔitfawwif* or *ʔiffawwif* /vi/ passive of *fawwif*. - iva *mitfawwif*.

ش و ق

سوق *fooq* /n pl *ʔafwaaq*/ yearning, longing, desire.

سوّق *fawwaq* /vt/ **1** to excite curiosity in. *fawwaqt-i-ni liiha* you've roused my curiosity about her. **2** to arouse desire or longing in. ‖*ʔil-buɛd' bi-yfawwaq [prov]* ≈ absence makes the heart grow fonder. - vn *tafwiiq*; ava *mifawwaq*.

تشويق *tafwiiq* /n/ suspense.
تشويقى *tafwiiqi* /adj/ thrilling.
اتشوّق ʔitfawwaq or ʔiffawwaq /vi/ **1** to yearn, long. **2** passive of *fawwaq*. - ava/iva *mitfawwaq*.
استاق ʔiftaaq /vi/ to yearn, long. *ʔiftaaqit li-ʔumm-a-ha* she longed for her mother. - vn *ʔiftiyaaq*; ava *miftaaq*.

ش و ك
سوك *fook* /coll n/ **1** thorn(s), prick(s), spike(s), spine(s). ‖*bi-fook-u* brand-new. **2** thistle(s). **3** fish bone(s).
شوكة *fooka* /n pl *-aat*/ **1** /unit n/ a thorn, a splinter, a spine, a fish bone. **2** any of various objects having a thorn-like shape or a thorn-like part (e.g., awl, adjusting-pin on the blade of a plane, cut-out mechanism on the loom which operates when a thread breaks). *kurbaag bi-fooka* spiked whip. *lamba fooka* bayonet-mount light-bulb. *winf' b-fooka* fork-lift. — /pl *fiwak, fuwak*/ **3** (table) fork.
سوكى *fooki* /adj/ thorny. ‖*tiin fooki* cactus fruit, prickly pear(s), Barbary fig(s) (Opuntia tuna).
شوكى *fawki* /adj/ pertaining to the spine. *ʔin-nuxaaɛ if-fawki* spinal fluid. *ʔil-ḥumma f-fawkiyya [path]* meningitis.
سايك *faayik* /adj/ barbed. *silk' faayik* barbed wire.
سوّك *fawwik* /vt/ to prick, prickle. *ʔil-baṭṭaniyya fawwikit-u* the blanket prickled him. - vn *tafwiik*; ava/pva *mifawwik*.
اتشوّك ʔitfawwik or ʔiffawwik /vi/ to be pricked or prickled. - iva *mitfawwik*.

ش و ل ¹
شوّل *fawwil* /vi/ to dry up (of milk, fruit). *ʔil-laban fawwil fi-sidr-a-ha* her milk dried up. - vn *tafwiil*; ava *mifawwil*.
اتسوّل ʔitfawwil or ʔiffawwil /vi/ to dry up (of fruit, milk). *ʔif-fatla ɛayza qill' w-ruṭuuba ɛafaan ma-titfawwil-f* the seedling needs shade and moisture so that it won't wither. - ava *mitfawwil*.

ش و ل ²
سول *fawal* /n/ left-handedness.
أسول ʔafwal /adj, fem *foola*, pl *fuul*/ left-handed.

ش و ل ³
سوّال *fawwaal* /prop n/ Shawwal, the tenth month of the Muslim year.

ش و ل ⁴ see ش و ا ل : *fuwaal, fiwaal*

ش و م ¹
شوم، سوم *foom', fuum'* /n/ shameful disgrace. *ya ɛeeb if-foom [women in trad soc]* (1) shame! for shame! (2) O what a pity! how awful! *riggaalit if-fuum* men unworthy of the name.
شؤم *fuʃm* /n/ evil omen. *naas wiff' fuʃm* people of ill-omen.
مشؤوم *maʃʃuum* /adj */ ill-omened, ill-fated. *yoom maʃʃuum* an evil day. *naas maʃʃumiin* unlucky people.
اتشائم ʔitfaaʃim or ʔiffaaʃim /vi/ to feel bad premonitions. *b-atfaaʃim lamma ʔafuuf-u* I get bad premonitions when I see him. - ava *mitfaaʃim*.
تشاؤم *tafaaʃum↑* /n/ pessimism.
متشائم *mutafaaʃim* /n */ pessimist.

ش و م ²
سوم *fuum²* **1** /n/ a kind of hard wood. **2** /coll n/ quarterstaff(s), cudgel(s), (specifically, those used in Upper Egypt).
سومة *fuuma* /n pl *-aat, fiwam*/ quarterstaff, cudgel.

ش و ن
سونة *foona* <Copt> /n pl *fiwan, fuwan*/ storage place (especially for grain). ‖*ga naqb-u ɛala foona (fadya) [prov]* (the hole he made led to an empty storeroom) ≈ his effort was in vain.
سوّن *fawwin* /vt/ to store, store up. - vn *tafwiin*; ava/pva *mifawwin*.
اتسوّن ʔitfawwin or ʔiffawwin /vi/ to be stored. - iva *mitfawwin*.

ش و ه
سوّه *fawwih, fawwah* **1** /vt/ to disfigure, deform. *mayyit in-naar fawwihit wiff-u* the nitric acid disfigured his face. **2** /vi/ to be defaced, be disfigured, be deformed. - vn *tafwiih*; ava/pva *mifawwih, mifawwah*.
تسويهه *tafwiiha* /n pl *-aat*/ a disfiguration, a deformity.
اتسوّه ʔitfawwih or ʔiffawwih, ʔitfawwah, ʔiffawwah /vi/ to be defaced, be disfigured, be deformed. - iva *mitfawwih, mitfawwah*.
تسوّه *tafawwuh↑* /n pl *-aat*/ disfigurement, deformity.

ش و ى ¹
سوى *fawa (i)* /vt/ to cook on coals or on a grill over coals or a fire. - vn *fawy, fayy*; ava *faawi*; pva *mafwi*.
مسويّات *mafwiyyaat* /pl n/ grilled foods.
سوّاية *fawwaaya* /n pl *-aat*/ grill, gridiron.
اتشوى ʔitfawa or ʔiffawa /vi/ passive of *fawa*. - iva *mitfiwi*.

ش و ی [2]

شوّية *ʃiwayya, ʃuwayya* /n pl *-aat*/ **1** an indefinite (but not large) number or quantity. *ʕiddaa-li f-ʃiwayya lli kaanit ɛandu* he gave me the amount he had. *ħaat ʃiwayyit karaasi kutaar hina* bring a good number of chairs over here! *ɛandu ʃwayyit ṣuuf* he has some wool. *kull' ʃwayyit ʕayyaam* every few days. *ɛandi ʃwayyit bard* I have a slight cold. *ʃiwayya (bi-)ʃwayya* little by little, gradually. *(ɛandu) ʃeeʕ wi-ʃwayyaat* (he has) quite a bit. - /adjectivally/ *ɛaql-u ʃwayya* he's not very bright. *baxt-u ʃwayya* he's not very lucky. **2** (short) period of time. *baɛd' ʃwayya* after a while, after a little while. *kull' ʃwayya* (1) from time to time, every once in a while, as in *b-aruuħ hinaak kull' ʃwayya* I go there every now and then. (2) very frequently, as in *ma-tixbaṭ-nii-ʃ bi-kalaam-ak kull' ʃwayya* don't keep snapping at me! ‖ *ħa-yʏiib ʃiwayya* he'll be away for a bit (i.e. quite a while). — /adv/ **3** somewhat, a bit. *bi-ṭariiqa ʕaħsan ʃiwayya* in a somewhat better way. *zaɛlaana ʃwayya* she's a bit upset. *ħagar kibiir ʃiwayya* a largish rock.

¶ *ʃiwayyiteen* /never used in constr/ = *ʃiwayya*.

استشوى *ʕistaʃwa* /vt/ to consider small. *ʕistaʃwa l-mahiyya* he thought the salary low. - vn *ʕistiʃwa*; ava *mistaʃwi*.

(ش و ی ش)

شويش *ʃiweeʃ, ʃuweeʃ: bi-ʃweeʃ* **1** slowly. *ʕitkallim bi-ʃweeʃ* speak slowly. **2** gently. *ɖarab-ni bi-ʃweeʃ* he tapped me. **3** quietly. *ʕidħak bi-ʃweeʃ* laugh (more) softly.

شاويش *ʃawiiʃ* <T *çavuş*> /n pl *ʃawiʃiyya*/ **1** sergeant. **2** form of address or reference to a policeman or soldier with a rank not higher than sergeant. *baʃʃawiiʃ* see ب ش .

ش ی

سي *ʃii* /interj/ cart-driver's call urging a horse to move ≈ giddup! ‖ *taxxan widn il-baʏl' b-ɢoolit ʃii [prov]* (flatter a mule by addressing him as if he were a horse) ≈ flatter gullible people by letting them think you have a high opinion of them.

ش ی ء [1]

شاء *ʃaaʕ (i)* /vt/ to will. *rabb-i-na ma-ʃaʕ-ʃ' lina r-raaħa* God didn't wish us to be comfortable. - vn *maʃiiʕa*; ava *ʃaayiʕ*.

¶ *ʕin ʃaaʕ allaah* or *ʕin ʃaaʕ allaah* God willing. *ħa-tsaafir ʕimta - ʕaaxir iʃ-ʃahr' ʕin ʃaaʕ allaah* 'When are you travelling?' 'End of the month, if all goes well.' *ħ-azur-ku bukra ʕin ʃaaʕ allaah* I will visit you tomorrow. - *ʕin ʃa-lla* (1) optative interjection. *ʕin ʃa-lla tzur-na ɢurayyib* I hope you'll visit us soon. (2) even if. *ʕiʃtirii-ha ʕin ʃa-lla titkallif miit gineeh* buy it even if it costs a hundred pounds! *yalla naakul kabaab - ʕin ʃa-lla ma-ħadd' ħawwiʃ* come on let's eat shish kebab - never mind the cost! - *ma ʃaaʕ allaah* or *ma ʃaaʕ allaah* prophylactic exclamation to ward off the evil eye (said upon seeing or hearing of something which excites one's admiration).

مشيئة *maʃiiʕa* /n/ will, wish. *kull-u b-maʃiiʕit illaah* or *kull-u b-maʃiiʕa* everything is subject to God's will.

مشلّة *maʃalla* /n pl *-aat*/ gold pendant with a Koranic inscription.

ش ی ء [2]

شيء *ʃeeʕ* /n pl *ʕaʃyaaʕ*/ thing. *kull' ʃeeʕ* everything. *ʃeeʕ ʕaħsan min la ʃeeʕ [prov]* a little is better than none. ‖ *biʃ-ʃeeʕ il-ʃilaani* at great cost. - *raagil ʃii ʃeeʕ li-llaah* (1) a charitable man. (2) a psychic man. *sitt' ʃiiha ʃeeʕ li-llaah* (1) a charitable woman. (2) a psychic woman. (3) a loose promiscuous woman. - *ɛandu ʃeeʕ wi-ʃwayyaat* he's quite well-off, he has quite a bit.

أشيا *ʕaʃya: ʕil-ʕaʃya* (or *ʕaʃyit-(u)) maɛdan* things are fine, things are in good shape, as in *ʕaʃyit-hum maɛdan* they are doing well.

ش ی ء [3] see **ء ش ی** [1] : *ʕiʃi*

ش ی ب [1]

شاب *ʃaab* [2] *(i)* /vi/ **1** to turn grey or white (of hair). ‖ *ʕiḍ-ḍarb' xalla ʃaɛr-i ʃaab* the beating scared the daylights out of me. **2** to grow old, become grey-haired or white-haired. ‖ *baɛd' ma ʃaab wadduu l-kuttaab [prov]* after he had become an old man, they sent him to elementary school (said in respect of an action taken after its proper time). - vn *ʃayabaan, ʃeeb*; ava *ʃaayib*.

شايب *ʃaayib* **1** /adj/ verbal adjective of *ʃaab*. ‖ *ʃaayib wi-ɢaayib* (epithet of) a dirty old man. — /n/ **2** king (in cards). **3** card game equivalent to 'old maid'.

شيبة *ʃeeba* /n/ white hair, grey hair. ‖ *raagil ɢalee ʃeeba w-heeba* a wise and respected old man.

سيّب *ʃayyib* /vt/ **1** to cause (hair) to turn white or grey. **2** to cause (s.o.) to turn (prematurely) grey or white (of a frightening experience, troubles, worries, and the like). **3** to give (s.o.) a hard time. - vn *taʃyiib*; ava *miʃayyib*.

اتشيّب *ʕitʃayyib* or *ʕiʃʃayyib* /vi/ passive of *ʃayyib*. - iva *mitʃayyib*.

استشيب *ʕistaʃyib* /vt/ **1** to regard as (too) old, reject

because of old age. **2** to select (s.o.) for (his) old age. - ava *mistafyib*.

[2] ش ی ب see **ش و ب**: *fayba*

[3] ش ی ب see **ش ا ب**: *faab[1]*

ش ی ت

شيت *fiit* <P *chît*> /n pl *-aat*/ chintz, flower-printed calico.

ش ی ح

شيح *fiiħ* /n/ variety of wormwood.

ش ی خ

شاخ *faax (i)* /vi/ **1** to grow old, age. **2** to become too old and hence inedible (of vegetables and fruits). - vn *fayxaan, fayxuuxa*; ava *faayix*.

شيخوخة *fayxuuxa* /n/ old age.

شيخ *feex* /n pl *fuyuux, mafaayix*/ **1** title of, and form of address or reference to, a man who is of the Islamic professions (e.g., reciter of the Koran, head of a Sufi order), and to whom some religious status is attributed. *feex il-ʕazhar* the Grand Sheikh of el-Azhar. *feex mafaayix iṭ-ṭuruq iṣ-ṣufiyya* the supreme head of all the Sufi orders in Egypt. ‖*kull[i] feex wi-lu ṭariiqa [prov]* (every sheikh has his own order) ≈ everyone has his own way of doing things. - *ʕif-feex il-biʕiid maqṭuuʕ nadr-u [prov]* ≈ out of sight, out of mind. - *ʕis-sitt[i] di feex* (or *feexa*) this woman is a simple soul. **2** title of respect to an older man. **3a** leader of a group. *feex il-ɣafar* chief watchman. *feex manṣar* (1) *[obsol]* leader of a criminal gang. (2) epithet for a clever cunning person, clever devil. *feex il-balad* appointed government official in charge of a section of a village (formerly) the elected deputy to the *ʕumda*). *feex ħaara* a semi-official acting as a liaison officer between a police station and the inhabitants of a small section of a district (responsible for infant inoculations, draftees etc.). **3b** acknowledged mentor or master. *huwwa feex il-mumassiliin* he's the Nestor of all actors. **4** tutelary or possession spirit. *wi-ħayaat feex di ...↓ [women]* by the spirit who inhabits this (e.g., drink of coffee) ....

¶ *la ya feex* and *ya feex* exclamation, addressed to a man, signalling (1) incredulous surpise. (2) amused or scoffing disbelief.

شيخة *feexa* /n/ **1** /pl *-aat*/ professional female Koran reciter. **2** /pl *mafaayix*/ leader of a *zaar* troupe.

¶ *la ya feexa* and *ya feexa* exclamation, addressed to a woman, signalling (1) incredulous surpise. (2) amused or scoffing disbelief.

شيّخ *fayyax* /vt/ **1** to address as *feex*, treat with the deference due to an old person. **2** to cause (vegetables, fruit) to become hard and inedible. - vn *tafyiix*; ava/pva *mifayyax*.

اتشيّخ *ʕitfayyax* or *ʕiffayyax* /vi/ **1** passive of *fayyax*. **2** *[usu deris]* to follow a life of abstinence. - iva *mitfayyax*.

استشيخ *ʕistafyax* **1** /vt/ to consider (s.o.) a simpleton. **2** /vi/ *[usu deris]* to follow a life of abstinence. - vn *ʕistifyaax*; ava *mistafyix*.

ش ی د

شيّد *fayyid* /vt/ to construct, erect, build. - vn *tafyiid*; ava/pva *mifayyid*.

اتشيّد *ʕitfayyid* or *ʕiffayyid* /vi/ to be constructed, be erected, be built. - iva *mitfayyid*.

[1] ش ی ش

شيشة *fiifa[1]* <T *şişe*> /n pl *-aat, fiyaf*/ water-pipe (see Pl.I, 1).

شيّش *fayyif* /vi/ to smoke a *fiifa*. - vn *tafyiif*; ava *mifayyif*.

[2] (ش ی ش)

شيش *feef* <P *shash*> /n/ **1** six (in dice etc.). ‖*feef beef* half-blind. **2** sixth point on a backgammon board.

شيش *fiif[1]* <T *şiş*> /n/ **1** foil. **2** fencing (as a sport).

شيش *fiif[2]* /coll n/ shutters. ‖*fiif ʕamrikaani* Venetian blinds.

شيشة *fiifa[2]: musmaar fiifa* short headless type of nail.

ش ی ط

شاط *faaṭ[2] (i)* /vi/ to be scorched, be singed, burn. *nisiina r-ruzz[a] ʕan-naar faaṭ* we forgot the rice on the fire so it burned. - vn *fayaṭaan, fiyaaṭ*; ava *faayiṭ*.

شيّط *fayyaṭ* /vt/ to scorch, singe, burn. *fayyaṭ il-ɋamiiṣ bil-makwa* he scorched the shirt with the iron. - vn *tafyiiṭ*; ava *mifayyiṭ*.

ش ی ط ن

شيطان *fiṭaan* **1** /n pl *fayaṭiin*/ devil. ‖*ʕallaah yigaazi ftaan-ak* that was very naughty of you! **2** *ʕif-fiṭaan* Satan, the Devil. *ʕif-fiṭaan liʕib bi-ʕaɋl-i* the Devil tempted me. *ʕif-fiṭaan faaṭir [prov]* the Devil is very crafty ≈ temptation is difficult to resist.

شيطاني *fiṭaani* /adj/ wild, not cultivated (of plants). *ʕil-baṭṭiixa di ma-zaraʕna-haa-ʃ - di ṭalʕa fiṭaani* we didn't plant this water-melon, it just came up wild.

سيطن *ʃayṭan* /vt/ to cause to behave naughtily. - vn *ʃayṭana*; ava/pva *miʃayṭan*.
اتسيطن *ʔitʃayṭan* or *ʔiʃʃayṭan* /vi/ to behave naughtily. - ava *mitʃayṭan*.

ش ى ع
ساع *ʃaaʕ (i)* /vt/ **1** to spread, cause to become widespread. *ʔaṣḥaab-u ʃaaʕu xabar nagaaḥ-u* his friends spread the news of his success. — /vi/ **2** to spread, become widespread. *xabar nagaaḥ-u ʃaaʕ* news of his success got around. **3** to go wild, become uncontrollable. *di ʃaaʕit wala ḥadd'-ʃ ʕaarif yurudd-a-ha* she's running around as she pleases and no one can check her. - vn *ʃayaʕaan, ʃuyuuʕ*; ava *ʃaayiʕ*.
شيوعى *ʃiyuuʕi* or *ʃuyuuʕi* **1** /adj */ Communist. **2** /n */ a Communist.
الشيوعيّة *ʔiʃ-ʃuyuʕiyya* /n/ Communism.
مساع *maʃaaʕ* /n/ joint or collective ownership. *ʔarḍ' (ʕal-)maʃaaʕ* jointly-held land.
سيّع *ʃayyaʕ* /vt/ **1** to send out, dispatch. *ʃayyaʕuu-ni b-gawaab* they sent me with a letter. **2** to see off. *ʃayyaʕuu-ni lil-maḥaṭṭa* they saw me off to the station. ‖*ʃayyaʕ ganaaza* to participate in a funeral procession. - vn *tafyiiʕ*; ava/pva *mifayyaʕ*.
اتسيّع *ʔitʃayyaʕ* or *ʔiʃʃayyaʕ* /vi/ passive of *ʃayyaʕ*. - iva *mitʃayyaʕ*.
إساعه *ʔifaaʕa* /n pl *-aat*/ rumour.
أساعة *ʔufaaʕa* ↓ see ش ع ع
استساع *ʔistafaaʕ* /vi/ to become filled with rumours or gossip. *ʔil-ḥaara kull-a-ha stafaaʕit bil-mawḍuuʕ bitaʕ-na* the whole neighbourhood became full of gossip about this business of ours. - ava *mistifaaʕ*.

ش ى ك [1]
سيك *ʃiik* [1] <Fr *chic*> /adj invar/ chic, elegant.
أسيك *ʔaʃyak* /el/ more/most chic or elegant.
سياكة *ʃiyaaka* /n/ chic, elegance.
سيّك *ʃayyik* /vt/ to make chic, make elegant. *ʃayyikit il-ʔooḍa* she made the room look elegant. - vn *tafyiik*; ava/pva *mifayyik*.
اتسيّك *ʔitʃayyik* or *ʔiʃʃayyik* /vi/ to become or be made chic, make oneself smart. - ava/iva *mitʃayyik*.

ش ى ك [2]
سيك *ʃiik* [2], *ʃeek* <Fr *chèque*> /n pl *-aat*/ (bank) cheque.

ش ى ك [3] see ش و ك : *ʃaayik*

ش ى ل [1]
شال *ʃaal* [3] *(i)* (vt) **1** to carry, bear. *huwwa tqiil ʕaʃaan tiʃiil-u* he's too heavy for you to carry. *ʃaal masʔuliyyit ʔixwaat-u* he bore the responsibility for his brothers. *ʃaayil id-dinya ʕala dmaaɣ-u* ≈ he is carrying the burdens of the world on his shoulders. *bi-yʃiil il-ʕeela kull-a-ha* he supports the whole family. ‖*ʕala qafa min yiʃiil* abundant, plentiful, as in *ʔayyaam zamaan kaan ir-ruzz[a] ʕala qafa min yiʃiil* in the old days rice was plentiful. *-ʃaal wi-ḥaṭṭ' f-nafs-u* he was offended, he took it to heart. *-ʃaayil ʕabd il-qaadir* see *qaadir*. **2** to remove. *ʃiil il-ḥagaat min ʕaṭ-ṭarabeeza* clear the things off the table. *ʃaal il-kulfa* he dispensed with formality. *ʃiil il-mablaɣ da min il-ḥisaab* deduct that amount from the account. **3** to lift, pick up. *ʕayziin winʃ' yʃiil is-sanduuq* we need a winch to lift the crate. ‖*gibaal ʃalit-hum wi-gbaal ḥaṭṭit-hum* (mountains picked them up and others put them down) ≈ (in story-telling) they had a long and arduous journey. *-ʃaalit il-beet* she cleaned the house from top to bottom. **4** to accommodate. *ʕawziin ṣaala tʃiil tultumiit nafar* they want a hall which can accommodate three hundred people. **5** to hold in custody, put in safe-keeping. *ʔiṣ-ṣarraaf bi-yʃiil il-filuus* the cashier keeps the money. *ḥ-atʔaxxar - bass' fil-li naṣiib-i* I'll be late, but keep my share for me. *ʔana ʃayl-u liz-zaman* ≈ I'm saving it for a rainy day. - vn *ʃeel, ʃayalaan*; ava *ʃaayil*.
¶ *ʃaal min* (or *li-*) to bear a grudge. *tikuun lissa ʃaayil minni* do you perhaps still bear me a grudge?
سيلة *ʃeela* /n/ **1** /pl *-aat*/ instance noun of *ʃeel*. *ʃeela beela* heave-ho! **2a** /pl *-aat, ʃiyal*/ (physical) load, burden. **2b** /pl *ʃiyal*/ (mental) load, burden.
سيّال *ʃayyaal* /n */ **1** porter. **2** loader.
سيّالة *ʃayyaala* /n pl *-aat*/ **1** *[non-Cairene]* spoon, scoop. **2** *[print]* small press elevators.
سيّالى *ʃayyaali* /adj invar/ portable.
استال *ʔiʃtaal [non-Cairene]* = *ʃaal*. - ava *miʃtaal*.
مسال *maʃaal* /n pl *-aat*/ carrying charge, freightage.
اتسال *ʔitʃaal* or *ʔiʃʃaal* /vi/ passive of *ʃaal* [3]. ‖*ʔitʃaal wi-thabad* see *ʔithabad*. - iva *mitʃaal*.
انسال *ʔinʃaal* = *ʔitʃaal*. - iva *minʃaal*.
سيّل *ʃayyil* /vt/ to cause or help to carry or bear. *ḥumaar rukuuba ma-bi-nʃayyil-uu-ʃ* we don't make a riding donkey carry loads. ‖*ʃayyil-ni w-ʔaʃayyil-ak [prov]* ≈ you scratch my back and I'll scratch yours. - vn *tafyiil*; ava/pva *mifayyil*.
اتسيّل *ʔitʃayyil* or *ʔiʃʃayyil* /vi/ passive of *ʃayyil*. - iva *mitʃayyil*.

ش ى ل [2] see ش ا ل : *ʃaal* [1], *ʃaal* [2]

ش ل ا ن see ش ى ل ا ن

(ش ى م)

سيمة *ʃiima* /n/ **1** /pl *-aat*/ eddy, whirlpool. - also *ʃimya*. **2** /pl *ʃiyam*/ habit.

مشيمة *maʃiima* /n pl *maʃaayim*/ afterbirth (of animals). - also *baʃiima*.

[1] ش ى ن

سان *ʃaan (i)* /vt/ to discredit. *ma-ʃii-ʃ ħaaga tʃiin-u* nothing can be said against it, it is immaculate. - vn *ʃayanaan*; ava *ʃaayin, ʃaaʕin↑*.

سين *ʃeen↓* /adj */ *[non-Cairene]* **1** ugly. **2** cruel.

[2] (ش ى ن)

شين *ʃiin* /fem n, pl *-aat*/ thirteenth letter of the Arabic alphabet.

سينى *ʃiini* <Fr *Chine*>: *ħibr[i] ʃiini* Indian ink.

ص

ص ا
صا *ṣaa* /fem n/ fourteenth letter of the Arabic alphabet. - also *ṣaad, ṣah*.

ص ا ج
صاج *ṣaag* <T *sac*> /n/ **1** sheet metal, sheet steel. *ʕilba ṣaag* tin can. *baab ṣaag* roll-down metal shutter. **2** /pl *-aat, ṣigaan*/ baking sheet.
صاجة *ṣaaga* /n pl *-aat*/ **1** steel sheet. **2a** finger cymbal. **2b** jingle of a tambourine.

ص ا د
صاد *ṣaad*[1] /fem n, pl *-aat*/ fourteenth letter of the Arabic alphabet. - also *ṣaa, ṣah*.

ص ا ص see **ص ص ى** : *ṣaaṣa*

[1] ص ا غ
صاغ *ṣaaɣ* (also *ṣaɣaquul ʃaɣaasi*) <T *sağ kol ağası*> /n pl *-aat*/ *[mil, obsol]* rank between captain and major (replaced by rank of *raaʃid*).

[2] ص ا غ see **س ا غ**

(ص ا ل)
صال *ṣaal* <T *sal*> /n pl *-aat*/ *[naut]* floating pontoon.
صالة *ṣaala* <It *sala*> /n pl *-aat*/ hall of a house or flat, often furnished as a living room. *ʃif-ʃaqqa ʃoḍteen wi-ṣaala* the flat has two rooms and a hall. **2** large room, public room, hall. *ṣaalit mazaad* auction room. *ṣaalit gumruk* customs hall. *ṣaalit ʕarḍ* (1) showroom, exhibition hall. (2) projection room. **3** stalls, orchestra seats (in a cinema). **4** *[obsol]* cabaret. *ṣaalit raqṣ* dance hall. ‖*da beet miʃ ṣaala* ≈ this is a respectable house.

ص ء ب see **س ب ن** : *sibaan*

ص ب ا see **ص ب ى** : *ṣaba*

ص ب ا ب
صباب *ṣubaab* <Fr *soupape*> /n pl *-aat/ [auto]* valve. *ṣubaab ʃakmaan* exhaust valve.

[1] ص ب ب
صبّ *ṣabb*[1] *(u)* /vt/ **1** to pour, pour out. *ṣabbit iʃ-ʃaay* she poured out the tea. ‖*markib ṣabb* bulk carrier. **2** to cast. *bi-nṣubb id-dirs' min id-dahab* we cast the tooth in gold. — /vi/ **3** to pour forth, stream. *baqa d-damm' yṣubb' min qurt-u* blood was gushing from his forehead. - vn *ṣabb, ṣababaan*; ava *ṣaabib*; pva *maṣbuub*.
صبّ *ṣabb*[2] /adj invar/ **1** solid, pure, unmixed. *dahab ṣabb* solid gold. *ʃil-baab xaʃab ṣabb* the door is solid wood. *laḥma ṣabb* lean, boneless meat. *ʃil-ʕeef qamḥ' ṣabb* the bread is one hundred percent wheat. ‖*dimaaɣ-u ṣabb* he is stubborn. *-ʕeef ṣabb [rur]* all-maize bread. **2** cast. *ḥadiid ṣabb* cast iron. *timsaal ṣabb* a cast statue.
صبّة *ṣabba*[1] /inst n, pl *-aat*/ **1** single casting or pouring operation. *ʃil-ʃasmant illi ʕandina ḥa-ykaffi talat ṣabbaat* we have enough cement for three pourings. **2** cast, casting. *ʃiṣ-ṣabba ṭilʕit mibaxbaxa* the casting came out with air bubbles in it.
صبيب *ṣabiib* = *ṣabb*[2].
مصبّ *maṣabb, miṣabb* /n pl *-aat*/ estuary.
مصبّة *miṣabba* /n pl *-aat*/ outlet.
اتصبّ *ʃitṣabb* or *ʃiṣṣabb* **1** to be poured. **2** to be cast. *ʃir-ruṣaaṣ yiṣṣabb[a] ʕala ʃ-ʃakl illi-ḥna ʕayziin-u* the lead is cast in the shape that we want. - iva *mitṣabb*.
انصبّ *ʃinṣabb* = *ʃitṣabb*. - iva *minṣabb*.
اتصبّب *ʃitṣabbib* or *ʃiṣṣabbib* /vt/ to pour forth, drip

with (especially sweat). *kaan wiff-u b-yitṣabbib ɛaraq bi-sabab il-ħarr* his face was dripping with sweat because of the heat. - ava *mitṣabbib*.

[2] ص ب ب

صبابة *ṣabaaba* /adv/ passionately (in love). *muxram ṣabaaba* head over heels in love.

[3] ص ب ب see ص ب ا ب : *ṣubaab*

ص ب ح

صبح *ṣibiħ* or *ṣabaħ (a)* /vi/ **1a** to begin a new day, enter upon morning. *ṣabaħt*^{i} *mṣaddaɛ* I began the day with a headache. ‖*tiṣbaħ ɛala xeer* ≈ good night. *-ṣabaħna w-ṣabaħ il-mulk*^{i} *li-llaah* pious exclamation upon waking up in the morning ≈ a new day, by the grace of God! **1b** preverb signalling action in the morning. *nibayyit-hum fil-mayya w-niṣbaħ nifil-hum* we leave them in water overnight and the next morning we take them out. **2a** to become. *ʕif-ʃaayiɛ bi-muruur il-waqt*^{i} *b-yiṣbaħ qaɛda* a fashion in time becomes the rule. *kaan fi-ħaal wi-ṣabaħ fi-ħaal* ≈ his fortunes were dramatically reversed. **2b** preverb signalling inchoative action. *kaan ʕaɛma w-ṣabaħ yifuuf* he used to be blind but now he can see. - ava *ṣaabiħ*.

صابح *ṣaabiħ* /adj */ fresh. *ʕil-fuul ṣaabiħ* the beans have just been cooked. ‖*ṣaabiħ bi-ṣaabiħ* in continuous fresh supply, as in *dayman nixbiz ṣaabiħ bi-ṣaabiħ* we always bake (bread) as we need it (we don't store any bread). *ʕiṣ-ṣaabiħ raabiħ ya fuul [vendor's cry]* ≈ it is the freshly cut broad beans that win the day!

صبح *ṣubħ* /n/ **1** morning. *ʕiṣ-ṣubħ* (1) in the morning. (2) this morning. ‖*ma tquulu ya ṣubħ* (do say 'O morning') it's too early in the day for this sort of trouble. *-ɛaṣ-ṣubh* first thing in the morning. *-min iṣ-ṣubħ* (1) since the morning, as in *min iṣ-ṣubħ*^{i} *l-ħadd*^{i} *bil-leel* from morning till night. (2) for a long time, as in *ʕiħna waqfiin mistanniin-ak min iṣ-ṣubħ* we've been standing waiting for you for ages. **2** *[Isl]* early morning prayer.

صبحيّة *ṣubħiyya* /n pl *-aat*/ morning, the first half of the day.

أصبح *ʔaṣbaħ*^{1} /el/ **1** more/most genial or cheerful. **2** more/most fresh.

صباح *ṣabaaħ* /n/ morning. ‖*ṣabaaħ il-xeer* or *ṣabaaħ il-full* or *ṣabaaħ il-qifṭa* etc. good morning. *-ṣabaaħ in-nuur* reply to *ṣabaaħ il-xeer* etc. - *ʕiṣ-ṣabaaħ rabaaħ* ≈ let's sleep on it.

¶ *ṣabaaħan* /adv/ in the morning.

صباحة *ṣabaaħa: min ṣabaaħit rabb-i-na* from the very early morning.

صباحي *ṣabaaħi* /adj/ morning, pertaining to the morning. *ħafla ṣabaħiyya* matinee, morning performance.

صباحيّة *ṣabaħiyya* /n pl *-aat*/ **1** /in constr/ the day after, the following morning. *nuzur-kum ṣabaħiyyit il-ɛiid* we'll visit you the day after the feast. *ṣabaħiyyit il-ɛamaliyya* the day after the operation. **2** first morning after the wedding night. *ṣabaħiyya mbarka ya ɛaruusa wi-nta ya ɛariis* a blessed morning to you, bride, and you, bridegroom! (traditional greeting on this occasion). **3** present, usually of food or money, given to a couple on the morning after their wedding-night.

¶ *min ṣabaħiyyit rabb-i-na* from the very early morning. *min ṣabaħiyyit rabb-i-na l-ħadd il-mavribiyya wi-ħna nazliin fuxl* we've been working (hard) from early morning till sun-set.

صبوح *ṣabuuħ* /adj/ fresh and pleasant (of complexions). *wiff*^{i} *ṣabuuħ* a genial face.

صبّاحي *ṣabbaaħi* /adv/ (through the night) until morning. *zakirt*^{i} *ṣabbaaħi* I studied until morning. *liɛibna bookar ṣabbaaħi* we played poker until morning.

مصباح *miṣbaaħ*↑ /n pl *maṣabiiħ*/ lamp. *miṣbaaħ kaaʃif* searchlight.

صبّح *ṣabbaħ* /vt/ **1** to start the day for (s.o.). *ʕalla yṣabbaħ-ak bil-xeer* may God give you a good morning! *ħa-tṣabbaħ-ni bil-xinaaq* will you bring me a quarrel first thing in the morning? **2** to approach (s.o.) first thing in the morning. *ma-ħadd*^{i}*-ʃ ṣabbaħ-na lissa* we haven't had any customers so far this morning (said by shopkeepers etc.). *la tṣabbaħ-u wala tmassii* ≈ keep well away from him! — /vi/ **3** to say good morning. *daxalit min xeer ma tṣabbaħ (ɛaleena)* she came in without saying good morning (to us). - vn *taṣbiiħ*; ava *miṣabbaħ*.

اتصبّح *ʔitṣabbaħ* or *ʔiṣṣabbaħ* /vi/ **1** to start the morning. *lissa ma-ṣṣabbaħnaa-ʃ* we haven't had any business yet this morning (said by shopkeepers etc.). *ʔitṣabbaħit bi-xnaaqa maɛa g-giraan* she had a quarrel with the neighbours first thing in the morning. *ya reet itṣabbaħt*^{i} *b-fingaan qahwa* I wish I had started the day (properly) with a cup of coffee. ‖ *ʔitṣabbaħ bil-xeer* good morning to you. **2** (impersonal) passive of *ṣabbaħ* 3. *da wiff*^{i} *yitṣabbaħ ɛaleeh* is that the kind of face one would wish good morning to! - ava/iva *mitṣabbaħ*.

أصبح *ʔaṣbaħ*^{2}↑ = *ṣibiħ* 2.

اصطبح *ʔiṣṭabaħ* /vi/ to start off the morning, encounter something first thing in the morning (such an encounter being regarded as an omen for the day). *ʔiṣṭabaħt*^{i} *b-wiff*^{i} *ħilw in-nahar-da* it made my day to see a pretty face this morning. *ʔiṣṭabaħna b-beeɛa kwayyisa* we began the day with a good sale. ‖ *ʔiṣṭibiħ* ≈ let's not have

this unpleasantness in the morning. - *ʕiṣṭibaaḥ-ak laban* (1) ≈ I'm delighted to have you as my first customer of the day (polite remark made by shopkeepers etc.). (2) may you have a good day. - vn *ʕiṣṭibaaḥ*; ava *miṣtibiḥ*.

اصطباحة *ʕiṣṭibaaḥa* /inst n, pl *-aat*/ a first encounter (with s.th. or s.o.) in the morning (regarded as an omen for the day).

استصبح *ʕistaṣbaḥ* /vt/ **1** to select for freshness. **2** to select (s.o.) for (his) pleasant features. — /vi/ **3** to start off the morning. - vn *ʕistiṣbaaḥ*; ava/pva *mistaṣbaḥ*.

استصباح *ʕistiṣbaaḥ* /vn/ ‖*ɣaaz il-istiṣbaaḥ [obsol]* street-lighting gas.

ص ب ر [1]

صبر *ṣibir, ṣabar, ṣubur (u)* /vi/ to act with patience, act with fortitude or endurance. *ʕuṣbur kamaan ʃiwayya* be patient a little longer! *m-aqdar-ʃ aṣbur ɛaleek ʕaktar min kida* I can't be patient with you any longer than that. *ḥa-tuṣbur ɛala l-muṣiiba di-zzaay* how will she be able to bear this calamity? *ṣibirt' w-nult* ≈ for being patient I was rewarded with achieving what I wanted. *ʕilli yiftihi l-ɛasal yuṣbur ɛala ɑarṣ in-naḥl [prov]* he who wants honey puts up with being stung by the bees. ‖*ṣibir ɛala nafs-(u)* to wait patiently, force oneself to be patient, as in *law ṣibirna ɛala nafs-i-na gumɛiteen ḥa-yiḍtarr' ybiiɛ bit-tasɛiira* if we hold out for two weeks he'll be forced to sell at the officially fixed price. - vn *ṣabr*; ava *ṣaabir*.

صبر *ṣabr*[1] /n/ patience (in adversity), fortitude. *ʕiṣ-ṣabr[a] ḥaraɑ id-dukkaan [prov]* patience let the shop burn down. *da ṣabr' ʕayyuub* that is the patience of Job! *ʕiṣ-ṣabr' ṭariiɑ is-salaama [prov]* patience is the way to well-being. *ʕiṣ-ṣabr' muftaaḥ il-farag [prov]* patience is the key to relief (after distress). *ʕiṣ-ṣabr' ṭayyib bass illi yirḍaa-bu [prov]* patience is fine, but who can put up with it? ‖*ṣabr-ak ɛalayya* be patient with me! - *ʕiṣ-ṣabr' gamiil* ≈ don't be so impatient! - *ṣabr-u-kum bi-llaah* ≈ have patience!

صبور *ṣabuur* /adj */ patient (in adversity).

صبّر *ṣabbar*[1] /vt/ to give patience, help (s.o.) to be patient. *ʕallaah yiṣabbar-ak ɛala balwit-ak* may God give you patience to bear your misfortune! - vn *taṣbiir*; ava/pva *miṣabbar*.

تصبيرة *taṣbiira* /n pl *-aat*/ snack.

اتصبّر *ʕitṣabbar*[1] or *ʕiṣṣabbar*[1] /vi/ **1** = *ṣibir*. **2** to be made patient. - ava/iva *mitṣabbar*.

ص ب ر [2]

صبر *ṣabr*[2] /n/ aloe.

صبّار *ṣabbaar* /coll n/ *[bot]* **1** succulent(s). **2** (loosely) cacti.

صبّارة *ṣabbaara* /unit n; pl *-aat*/ **1** any of various succulent plants, such as aloe or agave. **2** (loosely) cactus.

صبّير *ṣubbeer* /n/ *[bot]* Indian fig (Opuntia ficus-indica).

صبّر *ṣabbar*[2] /vt/ to embalm. *kaanu l-faraɛna yṣabbaru l-mayyitiin bi-ʕagza kimawiyya minha ṣ-ṣabr* the Pharaohs used to preserve the bodies of the dead by treating them with chemicals including aloes. ‖*waɑfa mṣabbara* she is standing motionless. - vn *taṣbiir*; ava/pva *miṣabbar*.

اتصبّر *ʕitṣabbar*[2] or *ʕiṣṣabbar*[2] /vi/ **1** to be embalmed. **2** to become motionless. *ʕitṣabbar fi-waɑfit-u* he stood motionless. - iva *mitṣabbar*.

ص ب ر [3] see ص ب و ر : *ṣabuura*

ص ب ر [4] see ب ص ر [1] : *ʕaṣbar*

ص ب ر ص

صبرص *ṣabraṣ* /vt/ *[naut]* to whip (the end of a rope). - vn *ṣabraṣa*; ava/pva *miṣabraṣ*.

ص ب ع

صباع *ṣubaaɛ* /n pl *ṣawaabiɛ*/ **1** finger. ‖*maftuuḥ ṣubaaɛ* (open by the width of a finger) just ajar. - *ḥiyya ṣawabɛ-ak zayy' baɛḍ-a-ha* (are all your fingers alike?) everybody is different. - *ʕakla taakul ṣawabɛ-ak waraaha* (a meal after which you will eat your fingers) a delicious meal. - *ṣawaabiɛ zeenab* type of confection sticky with honey. - *ḥaṭṭ' ṣbaaɛ-u* (or *ṣawabɛ-u) fif-faɑɑ* (he put his finger in the crack) he gave up, he threw his hand in. - *ḥaṭṭ' ṣawabɛ-u (g-gooz) fi-ɛnee* he defied (him), he told (him) where to get off. **2** (also *ṣubaaɛ ir-rigl*) toe. *laɑeet ḥaaga zayy il-faɑfuuɑa taḥt' ṣbaaɛ-i l-kibiir* I discovered a sort of blister under my big toe. **3a** roughly finger-shaped object. *ṣubaaɛ mooz* a banana. *ṣawaabiɛ biyaanu* piano keys. *ṣubaaɛ dinamiit* stick of dynamite. *ṣubaaɛ ruuj* a lipstick. *ṣubaaɛ ṭabafiir* stick of chalk. **3b** pen (in the jargon of pickpockets). **4** linear measurement equal to 3.125 centimetres.

صابع *ṣaabiɛ* = *ṣubaaɛ*.

صبّع *ṣabbaɛ* /vt/ to shape (dough, *kufta* etc.) into fingers. - vn *taṣbiiɛ*; ava/pva *miṣabbaɛ*.

مصبّع *miṣabbaɛ* /adj/ *[carp]* straight-grained (of wood).

اتصبّع *ʕitṣabbaɛ* or *ʕiṣṣabbaɛ* /vi/ to be shaped into fingers (of dough, *kufta* etc.). - iva *mitṣabbaɛ*.

ص ب غ see س ب غ: *ṣabaɣ, ṣabɣa, maṣbaɣa, ʃitṣabaɣ*

ص ب ن [1]

صابون *ṣabuun* <cf It *sapone*> /n pl *ṣawabiin*/ soap. *ṣabuun wiff* or *ṣabuun ḥammaam* or *ṣabuun tawalitt* toilet soap. *ṣabuun ɣasiil* laundry soap. *ṣabuun mawaɛiin* kitchen soap. ‖*ṣabuun il-ɛafriit* variety of fleabane (Gnaphalium luteo-album). -*ṣabuun il-ɣeeṭ* plant (Auagallis arvensis) of the primrose family, commonly found in fields and gardens. -*kull-u ɛand il-ɛarab ṣabuun [prov]* (it's all soap to the bedouins) ≈ it's all the same thing to those who know nothing.

صابونة *ṣabuuna* /n pl *-aat*/ bar of soap. ‖*ṣabuunit ir-rukba* kneecap. -*sanda ṣabuuna* convex dolly block.

صابوني *ṣabuuni* /adj */ pure white (of a horse).

صبّانة *ṣabbaana* /n pl *-aat*/ **1** shaving mug. **2** soapdish.

مصبنة *maṣbana* /n pl *maṣaabin*/ **1** soapdish. **2** *[obsol]* soapworks.

صبّن *ṣabbin*[1] /vt/ to soap, apply soap to. *furʃit it-taṣbiin* shaving brush. -vn *taṣbiin*; ava/pva *miṣabbin*.

اتصبّن *ʃitṣabbin*[1] or *ʃiṣṣabbin*[1] /vi/ to be soaped, be rubbed with soap. -iva *mitṣabbin*.

ص ب ن [2]

صبّاني *ṣabbaani* (also *ḥabl*[i] *ṣabbaani*) /n/ stout hemp rope used as a sling in the handling of heavy cargoes.

صبّن *ṣabbin*[2] /vt/ to handle (cargo etc.) in a sling. -vn *taṣbiin*; ava/pva *miṣabbin*.

اتصبّن *ʃitṣabbin*[2] or *ʃiṣṣabbin*[2] /vi/ to be handled in a sling. -iva *mitṣabbin*.

ص ب و see ص ب ى: *ṣabwa*

ص ب و ر

صابورة *ṣabuura* <Gr *saboura*> /n/ ballast.

ص ب ى [1]

صبا *ṣiba* /n/ **1** youth, childhood. *kunt*[i] *f-ṣibaa-ya b-aftaɣal naffaal* I used to work as a pickpocket in my youth. **2** youth, youthfulness. *lissa baayin ɛaleeha ṣ-ṣiba* she still has the appearance of youth.

صبا *ṣaba* /n/ **1** *[mus]* mode in Arabic music beginning on D and having E half flat, G flat and B flat. **2** (*nasiim* or *nisiim*) *iṣ-ṣaba* mild easterly breeze, in poetry suggestive of one's love.

صبوة *ṣabwa* /adj pl *-aat*/ having spine or backbone, stout, solid. *da ṣabwa wala kull iṣ-ṣabwaat* this is the toughest of all the guys.

صبي *ṣabi* /n pl *ṣubyaan*/ **1** boy. *xallifit talat ṣubyaan* she gave birth to three boys. ‖ *ʃumm iṣ-ṣubyaan* demoness believed to snatch or injure children. **2** boy employed in a small business, assistant, apprentice. *kunt*[i] *b-aftaɣal ṣabi baqqaal* I used to work as a grocer's assistant. — /adj pl *ṣubyaan*/ **3** youthful, young-looking. *hiyya ṣaḥiiḥ ɣarrabit ɛal-xamsiin laakin lissa ṣabiyya* true she's approaching fifty but she's very young-looking.

صبيّة *ṣabiyya* /n pl *ṣabaaya*/ young girl.

أصبى *ʃaṣba* /el/ more/most youthful.

صبّى *ṣabba*[2] /vt/ to render youthful again. *xadit li-nafs-a-ha ʃabb*[i] *ṣɣayyar laakin faḥl*[a] *ɛafaan yiṣabbii-ha* she took a strong young lover to help her regain her youth. -vn *taṣbiyya*; ava *miṣabbi*.

اتصبّى *ʃitṣabba* or *ʃiṣṣabba* /vi/ to regain one's youth. *bi-ymiil li-mutaɛ if-fabaab - nifs-u yitṣabba* he inclines to youthful pleasures as he wishes to regain his youth. -iva *mitṣabbi*.

اتصابى *ʃitṣaaba* or *ʃiṣṣaaba* /vi/ to behave like a young person (of an older man or woman). -ava *mitṣaabi, mutaṣaabi*↑.

استصبى *ʃistaṣba* /vt/ **1** to select for youth or youthfulness. **2** to consider young. — /vi/ **3** to behave like a young person. -ava *mistaṣbi*.

ص ب ى [2]

صبّى *ṣabba*[3] /vi/ to doze. *ɛeeb tuqɛud tiṣabbi wiḍ-duyuuf qaɛdiin* it is impolite to keep nodding off while the guests are present. -vn *taṣbiyya*; ava *miṣabbi*.

ص ح ب

تصحب *tiṣḥab: tiṣḥab-ak is-salaama* may peace be with you.

صحبة *ṣuḥba* **1** /vn/ accompanying. *waṣal bi-ṣuḥbit ʃaxuu* he arrived accompanied by his brother. **2** /n/ company, companion(s). *ʃil-walad da* (or *ʃil-bint*[i] *di*) *ṣuḥba sayyiʃa* this boy (or girl) is a bad companion. **3** /n pl *ṣuḥab*/ bouquet, posy, bunch (of flowers).

صاحب *ṣaaḥib*[1] /n pl *ʃaṣḥaab, ṣuḥaab, ṣiḥaab, ṣaḥaaba, ṣuḥabaat*↓/ **1** (male) friend. **2** /in constr w foll n/ owner of, holder of, one with, one concerned with, one responsible for. *ṣaaḥib milk* property owner. *ṣaaḥib tawkiil* agency holder. *ʃaṣḥaab il-leela* those giving the party. *ṣaaḥib ɛamal* employer. *ṣaaḥib maraḍ* (or *ɛaya*) sickly person. *ʃaṣḥaab mihan* professional people. *ṣaaḥib keef* bon vivant. *ṣaaḥib mazaag* connoisseur. *ṣaaḥib il-galaala (l-malik)* His Majesty (the king). *ṣaaḥib is-simuww (il-malaki)* His (Royal) Highness. *ṣaaḥib il-faxaama* (or *is-saɛaada*) His Excellency. *ṣaaḥib il-faḍiila [Isl]* His Eminence. *ṣaaḥib il-qadaasa*

[Chr] His Holiness. *ṣaaḥib in-niyaafa [Chr]* His Grace. *ṣaaḥib baleen kaddaab wi-ṣaaḥib talaata mnaafiq [prov]* ≈ one who tries to do two things at once is fooling himself, and he who tries to do three fools himself even more. — *ʔiṣ-ṣaḥaaba* /pl n/ **3** the Companions of the Prophet Muhammad.

صاحبة *ṣaḥba* /n pl *-aat*/ **1** (female) friend. **2** (female) owner, holder, the one with. *ṣaḥbit il-beet* the landlady. *ṣaḥbit ʔadab wi-kamaal* a polite, refined lady. *ṣaḥbit il-galaala* Her Majesty. see further under *ṣaaḥib*[1].

مصحوب *maṣḥuub*↑ /adj/ accompanied. *fii tafaaʕulaat maṣḥuuba b-daragaat ʕalya min il-ḥaraara* some reactions are accompanied by high temperatures. *maṣḥuub bis-salaama* may peace be with you ≈ goodbye.

صاحب *ṣaaḥib*[2] /vt/ **1** to befriend, make friends with. *miraat-i ṣaḥbit naas ʔaxlaq-hum wiḥʃa* my wife got into bad company. **2** to accompany. *ʔis-sitt' bi-tvanni wi-ḥna bi-nṣaḥib-ha bil-ʕazf* the lady sings and we play the accompaniment. *ʔalaat muṣaḥba* accompanying instruments. - vn *miṣaḥba, ṣuḥubiyya*; ava *miṣaaḥib*.

صحوبيّة *ṣuḥubiyya* /n/ friendship.

اتصاحب *ʔiṭṣaaḥib* or *ʔiṣṣaaḥib* /vi/ **1** to make friendly overtures, strike up a friendship. *ʔana xaayif ʔinnaha miṭṣaḥba ʕalayya ʕalaʃaan manfaʕit-ha* I'm afraid she's being friendly towards me out of self-interest. *ʔiṭṣaḥibna ʕala* (or *maʕa) baʕd' wi-ḥna fig-geef* we became friends when we were in the army. **2** (impersonal) passive of *ṣaaḥib*[2]. *dool naas yiṭṣaaḥib ʕaleehum* are these the people to get friendly with! - ava/iva *miṭṣaaḥib*.

ص ح ح

صحّ *ṣaḥḥ*[1] *(a)* /vi/ **1** to flourish, develop well. *ʔil-firaax ṣaḥḥu w-ma-mat-ʃ' minhum wala waaḥid* the chickens did fine and not one of them died. *tigart-u ṣaḥḥit wi-baqit ʕaal* his business grew and flourished. **2** to recover (one's health). *ʔil-ʕayyaniin ṣaḥḥu w-baqu ʕaal* the sick regained health and became quite well. **3**↓ to become attainable, come within reach. *kull illi yṣaḥḥ' lak ʔiʕmil-u* do all that comes within the range of your ability. *ʔin ṣaḥḥ' liyya qirfeen ʔabqa ʔaʃtirii-li qamiiṣ* if I come by some money I will buy myself a shirt. *ʔin ṣaḥḥ il-ʕeef yibqa l-baaqi ʃabraqa [prov]* (if the bread turns up, the rest (of the food) is (dispensable) luxury) ≈ keeping body and soul together does not require much. — *yiṣaḥḥ* (also *yiṣaḥḥ inn*) /preverb/ **4** to be fitting, be appropriate. *huwwa beeh kibiir wi-yṣaḥḥ' ykuun ʕandu ʕarabiyya* he's a very important man and it's quite reasonable that he should have a car. *ma-yṣaḥḥ'-ʃ tikallim-u kida* you shouldn't talk to him this way. **5** to be possible. *yiṣaḥḥ' tiigi dilwaqti* it is possible that she may come now. *yiṣaḥḥ innu ma-yurfuḍ-ʃ* it is possible that he won't refuse. - vn *ṣiḥḥiyya, ṣaḥaḥaan*; ava *ṣaaḥiḥ*.

صحّ *ṣaḥḥ*[2] /adj invar/ right, correct, proper. *ʔil-muwaṣafaat iṣ-ṣaḥḥ* the correct specifications. *ʔit-taṣarruf iṣ-ṣaḥḥ* the right thing to do. *ʔil-mudiir iṣ-ṣaḥḥ' b-yiʕmil kida* a real director acts in this way.

صحّة *ṣiḥḥa* /n/ **1** health, good health. *ṣiḥḥit-ak ʕaal* you are in excellent health. *ṣiḥḥit-i taʕbaana ʃwayya n-nahar-da* I'm not well today. ‖ *ʔizzayy iṣ-ṣiḥḥa* ≈ how are you? *-fi-ṣiḥḥit-ak* your health! cheers! *- bi-ṣiḥḥa w-ʕafya* ≈ may it bring health and strength (said to one eating or drinking). *- rabb-i-na yiddii-k iṣ-ṣiḥḥa* (may God give you health) kindly wish expressed to a person suffering from the effects of illness or age. *- wi-nta biṣ-ṣiḥḥa (wis-salaama)* and may you too be in good health (polite reply to the festival greeting *kull' sana wi-nta ṭayyib* ≈ may you be well at every recurrence of this annual celebration!). *- (maktab) iṣ-ṣiḥḥa* the local government health centre. **2** truth, integrity. *sabatit ṣiḥḥit kalaam-u* the truthfulness of his statement was established. **3** correct version. *ʔil-ḥikaaya di ṣiḥḥit-ha ʔinn' huwwa lli katab ig-gawaab miʃ hiyya* the correct version of the story is that it is he, not she, who wrote the letter.

صحّي *ṣiḥḥi* /adj */ sanitary, health-. *ʃahaada ṣiḥḥiyya* health certificate. ‖ *ʔadawaat ṣiḥḥiyya* bathroom fixtures. *- sabbaak ṣiḥḥi* domestic plumber.

¶ *ṣiḥḥiyyan* /adv/ healthwise. *laayiq ṣiḥḥiyyan* physically fit.

صحيح *ṣaḥiiḥ* /adj pl *ṣuḥaaḥ*/ **1** correct, true, proper. *kida ṣaḥiiḥ* is that (really) true? *ḥuṭṭ il-karaasi f-waḍʕ-a-ha ṣ-ṣaḥiiḥ* put the chairs in their proper place. *bi-ṣaḥiiḥ* really, truly, as in *ḥa-traggaʕ-u b-ṣaḥiiḥ* will you really return it? **2** whole. *ʔil-ʔasmaak bi-tiigi ṣḥiiḥa* the fish come whole. — /adv/ **3** really, truly. *da ṣaḥiiḥ kaddaab* he certainly is a liar, it's true that he's a liar.

أصحّ *ʔaṣaḥḥ*↑ /el/ **1** more/most correct, true or proper. *ʕala l-ʔaṣaḥḥ* or *bil-maʕna l-ʔaṣaḥḥ* more correctly, to be more precise. **2** more/most healthy.

إصحاح، أصحاح *ʔiṣḥaaḥ, ʔaṣḥaaḥ* /n pl *-aat*/ chapter (of the Scriptures).

مصحّة *maṣaḥḥa* /n pl *-aat*/ centre for convalescence and the treatment of mild illnesses.

صحّح *ṣaḥḥaḥ* /vt/ **1** to check, correct, amend. *ʔawraaq il-imtiḥanaat titsallim lil-ʔustaaz illi ḥa-yṣaḥḥaḥ-ha* the exam papers are handed over to the teacher who will correct them. *ʔil-birovaat tiruuḥ il-ʔawwal lit-taṣḥiiḥ*

the proofs first go to be proof-read. **2** to change (money) into higher denominations. *naas tiḥibb^{i} tfukk^{i} fluus wi-naas tiṣaḥḥaḥ-ha* some people like to change money into lower denominations, others into higher ones. - vn *taṣḥiiḥ*; ava/pva *miṣaḥḥaḥ*.

تصحيحة *taṣḥiiḥa* /inst n, pl *-aat*/ a (single) marking or correcting.

مصحّح *muṣaḥḥiḥ* /n */ **1** person who corrects examination papers. **2** proofreader.

اتصحّح *ʔitṣaḥḥaḥ* or *ʔiṣṣaḥḥaḥ* /vi/ **1** to be checked, corrected or amended. *ʔil-karariis il-miṣṣaḥḥaḥa ɛala maktab-i* the corrected exercise books are on my desk. **2** to be changed into higher denominations (of money). - iva *mitṣaḥḥaḥ*.

ص ح ر

صحرا، صحراء *ṣaḥra* /n pl *ṣaḥaari, ṣaḥaara*/ desert. *ʔiṣ-ṣaḥra l-kubra* the Sahara Desert. *ṣaḥaara siti* night-club in the desert near the Pyramids of Guiza.

صحراوى *ṣaḥraawi* /adj */ desert-, of the desert. *ṭariiq ṣaḥraawi* desert road.

ص ح ص ح

صحصح *ṣaḥṣaḥ* **1** /vt/ to stir (s.o.) to alertness or activity. *ṣaḥṣaḥ (nafs-ak)* look smart! wake up a bit! *gaww^{i} mṣaḥṣaḥ* invigorating weather. **2** /vi/ to become alert. *ṣaḥṣaḥ luhum kuwayyis la-yyiffuu-k* be on your guard against them lest they deceive you. - vn *ṣaḥṣaḥa*; ava/pva *miṣaḥṣaḥ*.

اتصحصح *ʔitṣaḥṣaḥ* or *ʔiṣṣaḥṣaḥ* /vi/ to stir oneself into activity, be stirred into activity. - ava/iva *mitṣaḥṣaḥ*.

ص ح ف

صحفى *ṣaḥafi* **1** /adj */ journalistic. *maqaal ṣaḥafi* newspaper article. *muʔtamar ṣaḥafi* press conference. **2** /n */ journalist.

صحافة *ṣaḥaafa* /n/ **1** journalism. **2** newspaper industry. *ḥurriyyit iṣ-ṣaḥaafa* freedom of the press.

صحيفة *ṣaḥiifa*↑ /n/ **1** /pl *ṣaḥaayif*/ paper, document. ‖*ṣaḥiifit sawaabiq* police record, criminal record. *-ṣaḥiifit daɛwa [leg]* (written) pleading. **2** /pl *ṣuḥuf*/ newspaper.

مصحف *muṣḥaf* /n pl *maṣaaḥif*/ copy of the Koran.

ص ح ن [1]

صحن *ṣaḥan (a)* /vt/ to grind. *ḥilba maṣḥuuna* ground fenugreek. - vn *ṣaḥn, ṣiḥiin*; ava *ṣaaḥin*; pva *maṣḥuun*.

صحنة *ṣaḥna* /inst n, pl *-aat*/ a grinding.

صحّانة *ṣaḥḥaana* /n pl *-aat*/ grinder (for coffee, grain etc.).

مصحنة *maṣḥana* /n pl *maṣaaḥin*/ grinder. *maṣḥanit bunn* coffee-grinder.

اتصحن *ʔitṣaḥan* or *ʔiṣṣaḥan* /vi/ to be ground. - iva *mitṣiḥin*.

انصحن *ʔinṣaḥan* = *ʔitṣaḥan*. - iva *minṣiḥin*.

ص ح ن [2]

صحن *ṣaḥn* /n pl *ṣuḥuun, ṣuḥúna*/ **1** plate, dish. ‖*ṣaḥn ir-rigl* the sole of the foot. **2** (also *ṣaḥn^{i} daar*) courtyard. **3** narthex (of a church).

ص ح و see ص ح ى : *ṣaḥw, ṣaḥwa*

ص ح ى

صحى *ṣiḥi (a)* /vi/ **1** to wake up, waken. *ʔil-beeh wis-sitt^{i} haanim ṣiḥyu walla lissa* have the master and mistress woken yet or not? *yiṣḥa mil-fagr^{i} kull^{i} yoom* he is awake from dawn every day. ‖*noobit ṣaḥayaan [mil]* reveille. **2** to become alert. *ʔana ṣaaḥi lu* I am on my guard for any of his tricks. - vn *ṣaḥayaan*; ava *ṣaaḥi*.

صاحى *ṣaaḥi* /adj */ awake, alert, alive.

صحو *ṣaḥw* /adj invar/ fair, clear, fine (of weather, sky).

صحوة *ṣaḥwa* /n/ awakening. *ṣaḥwit il-moot* final rally before death.

صحيان *ṣaḥyaan* /adj */ alert. *ṣaḥyaan li-rooḥ-u* looking out for himself, taking care of number one.

أصحى *ʔaṣḥa* /el/ more/most alert, alive or awake.

صحّى *ṣaḥḥa* /vt/ to awaken, rouse. *gih il-buliis ṣaḥḥaa-ni f-wist il-leel* the police came and woke me up in the middle of the night. - vn *taṣḥiyya*; ava/pva *miṣaḥḥi*.

اتصحّى *ʔitṣaḥḥa* or *ʔiṣṣaḥḥa* /vt/ to be awakened, be roused. - iva *mitṣaḥḥi*.

ص خ ر

صخر *ṣaxr* /n pl *ṣuxuur*/ rock.

صخرى *ṣaxri* /adj/ rocky, stony.

ص د ء see ص د ى [1]

ص د د [1]

صدّ *ṣadd (u)* /vt/ **1** to deflect, parry, block. *law waahid faaṭ il-koora fig-goon yiqdar yiṣudd-a-ha* if someone shoots the ball at the goal he can deflect it. ‖*ṣadd^{i} (w-)radd* to and fro, as in *ʔil-makkuuk maafi ṣadd^{i} radd* the shuttle runs to and fro. *-ṣadd^{i} nifs(-u) ɛan* to put (s.o.) off (his food, his work). **2** to rebuff. *ʔil-bint^{i} kull^{i} m-akallim-ha ṭṣudd-i-ni* every time I speak to the girl she rebuffs me. - vn *ṣadd, ṣadadaan*; ava *ṣaadid*; pva *maṣduud*.

صدّة *ṣadda* /inst n, pl *-aat/ [sport]* a block, a deflection, a return.
¶ *ṣadda (w-)radda* (1) to and fro. (2) a street ball game.
صادود *ṣaduud* /n pl *ṣawadiid/* support for the cross beam of a *saqya* (see Pl.E, 2). *yimuut it-toor wi-nifs-u f-ḥakka fiṣ-ṣaduud [prov]* (an ox dies wishing for a rub against the *ṣaduud*) ≈ old habits die hard.
مصدّ *maṣadd* /n pl *-aat/* obstruction, barrier.
اتصدّ *ʔitṣadd* or *ʔiṣṣadd* /vi/ **1** to be deflected, be parried, be blocked. ‖*nifs(-u) nṣaddit ʕan* to be put off (one's food, one's work). **2** to be rebuffed. - iva *mitṣadd*.
انصدّ *ʔinṣadd* = *ʔitṣadd*. - iva *minṣadd*.

ص د د [2]
صديد *ṣadiid* /n/ pus.
صديدى *ṣadiidi* /adj */ exuding pus. *ramad ṣadiidi [path]* ophthalmia.

ص د ر
صدر *ṣadar (u)* /vi/ **1** to appear, emerge, originate. *huwwa-na ṣadar minni ḥaaga tzaʕʕal-ak* have I done anything to anger you? **2** to be promulgated, be issued. *magallit ṣabaaḥ il-xeer bi-tuṣdur kull' ʔusbuuʕ* the magazine *ṣabaaḥ il-xeer* appears every week. *ʔil-qanuun il-gidiid ṣadar min ʔusbuuʕ* the new law came out a week ago. *ṣadarit ʔashum min ʕadad min if-farikaat* shares have been issued by a number of companies. - vn *ṣuduur*; ava *ṣaadir*.
صادر *ṣaadir[1]* **1** /adj */ departing, outgoing. *gadwal il-quṭúra ṣ-ṣadra* table of train departures. *baḍaayiʕ ṣadra* goods for delivery. **2** /n/ outgoing mail, outgoing messages. *daftar iṣ-ṣaadir* register of outgoing mail. *maktab iṣ-ṣaadir* telegraph transmitting office.
صادرات *ṣaadiraat* /pl n/ exports.
صدر *sidr[2], ṣadr* /n pl *ṣuduur, ʔiṣdaar/* **1** chest, breast, bosom. *ḍarabt-u f-sidr-u* I struck him on the chest. *xad-ha ʕala sidr-u* he clasped her to his bosom. *baʕd il-wilaada s-sidr' b-yikbar* after childbirth the bosom becomes larger. *mustaffa ṣ-ṣadr* chest hospital. *maqaas is-sidr* chest measurement, bust measurement. ‖*sidr il-xaṭṭ* the side of the furrow. - *sidr-u waasiʕ* he's tolerant and understanding. - *fataḥ-li sidr-u* he became patient and understanding. **2** cutting edge (of a blade).
صدرى *sidri, ṣadri*↑ /adj/ pertaining to the chest. *ʔil-mustaffa ṣ-ṣadriyya* the chest hospital. ‖ *ʔil-ḍafaṣ iṣ-ṣadri* the rib cage.
صدريّة *sidriyya* /n pl *-aat/ [Chr]* alb.
صدارة *ṣadaara*↑ /n/ priority, precedence. *ḍaḍiyyit il-bitrool liiha ṣ-ṣadaara fil-mufawḍaat* the question of oil has priority in the negotiations. *ʔil-kamangaat fi-makaan iṣ-ṣadaara* the violins are in the most prominent position.
صديرى *sideeri* /n pl *sadaari/* **1** type of vest or waistcoat worn under the galabiya (see Pl.F, 3). **2** waistcoat.
مصدر *maṣdar* /n pl *maṣaadir/* **1** source. *maṣdar rizq* source of sustinence. *maṣdar iṣ-ṣoot* the source of the sound. **2** jacket pocket (in pickpockets' jargon). **3** *[gram]* verbal noun.
مصدور *maṣduur* /adj */ suffering from tuberculosis.
صدّر *ṣaddar* /vt/ **1** to dispatch. *tariix taṣdiir il-muzakkara feen* where is the date of dispatch of the memorandum? **2** to export. **3** to put in the front. *kull' m-akallim-u yṣaddar-li ʔaxuu* every time I question him he confronts me with his brother. - vn *taṣdiir*; ava *miṣaddar*.
مصدّر *muṣaddir* /n */ exporter.
اتصدّر *ʔitṣaddar* or *ʔiṣṣaddar* /vi/ **1** passive of *ṣaddar*. **2** to push oneself forward. *geet ʔaxuff' f-ʔooḍit il-maʔmuur ʔitṣaddar-li ʕaskari txiin* just as I was going into the police chief's office a fat cop confronted me. *bi-yiigi ʕala l-hayfa w-yitṣaddar* (he comes up against what is trifling and asserts himself) ≈ he tilts at windmills. - ava/iva *mitṣaddar*.
صادر *ṣaadir[2]* /vt/ to confiscate. - vn *muṣadra*; ava/pva *miṣaadir*.
اتصادر *ʔitṣaadir* or *ʔiṣṣaadir* /vi/ to be confiscated. - iva *mitṣaadir*.
أصدر *ʔaṣdar* /vt/ **1** to issue, promulgate. *ʔaṣdarit il-ḥukuuma taʕlimaat gidiida lil-muwaẓẓafiin* the government has issued new instructions to civil servants. **2** to publish, put out. *ḥa-nisdir ʕadad xaaṣṣ' l-mudillaat ir-rabiiʕ* we shall put out a special issue for the spring fashions. **3**: *ʔiwrik-ni wi-ṣdir nafs-ak [prov]* (give me the leg and take the breast yourself) no-one is expected to promote others above his own head. - vn *ʔiṣdaar*; ava *miṣdir*.
استصدر *ʔistaṣdar* /vt/ to obtain, have issued. *ʔistaṣdaru ʔamr' min il-maḥkama bil-ʔixla* they obtained a court order for the eviction. - vn *ʔistiṣdaar*; ava *mistaṣdar*.

ص د ع
صداع *ṣudaaʕ* /n/ headache. *ʔana gaa-ni ṣudaaʕ* I've got a headache.
صدّع *ṣaddaʕ* **1** /vt/ to afflict with a headache. *ṣaddaʕt-i-ni* you have given me a headache! **2** /vi/ to get a headache. *raas-u ṣaddaʕit min ʔillit in-noom* ≈ he developed a headache from lack of sleep. - vn *taṣdiiʕ*; ava/pva *miṣaddaʕ*.
اتصدّع *ʔitṣaddaʕ* or *ʔiṣṣaddaʕ* /vi/ **1** to be given a

headache. **2**↑ to collapse, crumble. *beet-u l-qadiim iṣṣaddaʕ* his old house has fallen into disrepair. - vn *taṣdduʕ*; ava/iva *miṭṣaddaʕ*.

ص د غ

صدغ *sidɣ* or *ṣidɣ*, *sadɣ* or *ṣadɣ* /n pl *sidaaɣ*, *ṣidaaɣ*, *ṣuduɣa*/ **1** cheek. *xabbaṭ-lu ʕala sdaaɣ-u ʕaʃaan yifuuq* slap his cheeks so he will come round. *huwwa ʕaamil zayy musmaar fiṣ-ṣidɣ* ≈ he's a pain in the neck. **2** cheek piece (of a bridle). **3** /adj invar/ cheeky.

صدغ *ṣidiɣ*, *sidiɣ* /adj */ cheeky.

أصدغ *ʔaṣdaɣ*, *ʔasdaɣ* /el/ more/most cheeky.

صدّغ *saddaɣ*, *ṣaddaɣ* /vi/ **1** to become fat and thick. **2** to behave in a cheeky manner. *mahma tkallim-u biz-zooq yṣaddaɣ-lak* however gently you talk to him, he's always rude to you. - vn *taṣdiiɣ*, *tasdiiɣ*; ava *miṣaddaɣ*, *misaddaɣ*.

استصدغ *ʔistasdaɣ*, *ʔistaṣdaɣ* **1** /vt/ to select for cheekiness. **2** to consider cheeky. — /vi/ **3** to behave cheekily. - vn *ʔistisdaaɣ*, *ʔistiṣdaaɣ*; ava *mistasdaɣ*, *mistaṣdaɣ*.

ص د ف [1]

صدف *ṣadaf[1] (a)* /vi/ to happen by chance. *ʔil-ʕiid ṣadaf wi-ga g-gumʕa* the feast happened to fall on a Friday. -/impersonally/ *yiṣdaf yikuun ʕandina win-nuur maqṭuuʕ* it may happen that he's at our place when there's a power cut. - ava *ṣaadif*.

صدفه *ṣudfa* **1** /n pl *ṣudaf*/ chance, chance circumstance, coincidence. *qabilt-u biṣ-ṣudfa* I met him by chance. *liṣ-ṣudaf is-saʕiida* owing to happy circumstance. **2** /adv/ by chance.

صادف *ṣaadif* **1** /vt/ to come across, chance upon. *ṣadift axuu fif-faariʕ* I happened upon his brother in the street. **2** /vi/ it happened (that). *yiṣaadif ʔinnu fis-sinima* it (so) happens that he's at the cinema. - vn *muṣadfa*; ava *miṣaadif*.

مصادفه *muṣadfa* /n pl *-aat*/ chance. *bil-muṣadfa* by chance.

اتصادف *ʔiṭṣaadif* or *ʔiṣṣaadif* /vi/ **1** to be come across, be chanced upon. **2** it happened (that). - ava/iva *miṭṣaadif*.

ص د ف [2]

صدف *ṣadaf[2]* /n/ **1** /coll/ shell(s). **2** mother-of-pearl.

صدفة *ṣadafa* /unit n, pl *-aat*/ a shell.

صدفيّة *ṣadafiyya* /n/ *[path]* psoriasis.

صدفجي *ṣadafgi* /n pl *-yya*/ worker in mother-of-pearl inlay.

ص د ق

صدق *sadaq*, *ṣadaq (u)* /vi/ to tell the truth, speak truthfully. *sadaq illi qaal il-ḥubb bahdala* he spoke truly who said that love turns you upside down. *ṭuul ʕumr-u b-yusduq fi-kalaam-u* he always speaks the truth. || *ʔana b-aḥibb asduq fi-mawaʕiid-i* I like to keep my appointments faithfully. - *laa wi-nta s-saadiq* polite prefatory remark made when about to contradict someone ≈ forgive me for contradicting you, but.... - vn *ṣidq*, *sudq*, *ṣidq*↑; ava *saadiq*, *ṣaadiq*.

صدق *ṣidq* or *sudq* /n/ truth. *kidb msaawi wala ṣidq mbaʕzaq [prov]* consistent lying is more credible than garbled truth.

صدقة *ṣadaqa*, *sadaqa*, *ṣadaqa* /n pl *-aat*, *-aat*/ **1** charitable deed or gift. *ʔik-kilma ṭ-ṭayyiba sadaqa* a kind word is a good deed. **2** *[Isl]* specific act of charity prescribed by religion.

أصدق *ʔaṣdaq*, *ʔasdaq* /el/ more/most truthful.

صداق *ṣadaaq* /n/ marriage settlement.

صداقة *ṣadaaqa*, *sadaaqa*[1], *ṣadaaqa* /n/ friendship. *ʔilli beeni w-beenak ʔaqwa min iṣ-ṣadaaqa* what's between you and me is stronger than friendship.

صداقة *sadaaqa*[2] /n/ truthfulness. *ʕandu sadaaqa* he is truthful.

صديق *ṣadiiq*, *ṣadiiq*↑ /n pl *ʔaṣdiqaaʔ*/ friend. *ʔiṣ-ṣadiiq bi-yfaarik ṣadiiq-u f-kull ḥaaga* friends share everything together.

صدّيق *ṣaddiiq*, *ṣiddiiq* /n/ *[Isl]* true believer (epithet of the first Caliph, Abu Bakr).

مصداق *misdaaq* (also *misdaaqan*): *misdaaq li-kalaam-ak* ... confirming your (truthful) words ....

صدّق *saddaq*, *ṣaddaq*[1] /vt/ to deem truthful, believe. *ya ret-ni ma-saddaqt-u fil-ʔawwil* I wish I hadn't believed him at the start. *da miʃ misaddaq naẓar-u* he can't believe his eyes. *tiḥlif-li ʔasaddaq-ak ʔafuuf ʔumuur-ak ʔastaʕgib [prov]* ≈ your behaviour contradicts what you say (though you try to convince me you're truthful)! *tisaddaq* would you believe? can you credit? || *tisaddaq bi-llaah* honestly! as God is my witness! - vn *tasdiiq*; ava *misaddaq*; pva *muṣaddaq*↑.

¶ *ma-saddaq* to be incredulous and overjoyed that, as in *ma-saddaqt aṭlaʕ mil-qism* I could hardly believe I was out of the police station, *laqeet xalt-i ʕayyaana w-ma-saddaqit ʃafit-ni* I found my aunt sick, and she was overjoyed to see me, *ma-saddaqt smiʕti kilma ʕaʃaan tiʕmil min il-ḥabba qubba* you just loved to seize upon a single word to make a mountain out of a molehill. - *ma-saddaq ... wi- ...* hardly had he ... when, as in *ma-saddaqna nirtaaḥ fiwayya w-gum gabu-lna fuṛl taani* we had hardly had chance to rest a bit when they came and brought us some more work, *ma-saddaq ʔinnuhum saʔaluu wi-nfataḥ* no sooner had they asked

him than he poured out his story.

صدّق *ṣaddaq*[2] /vi/ to give authorization, give endorsement or confirmation. *b-aɛmil ṭalàb bi-ṭṣaddaq ɛalee ʃil-ʃidaara* I make out a request which the administration authorizes. *ʃit-tawqiiɛ laazim it-taṣdiiq ɛalee min gihit il-waziir* the signature has to be endorsed by the minister. - vn *taṣdiiq*; ava *miṣaddaq*.

مصدّقات *muṣaddaqaat* /pl n/ endorsed documents.

اتصدّق *ʃitsaddaq* or *ʃissaddaq* /vi/ to be believed. - iva *mitsaddaq*.

اتصدّق *ʃitṣaddaq* or *ʃiṣṣaddaq* /vi/ (impersonal) passive of *ṣaddaq*[2]. *ʃir-riḥla ṭṣaddaq ɛaleeha f-ʃaaxir laḥẓa* the trip was approved at the last minute. - iva *mitṣaddaq*.

صادق *ṣaadiq* **1** /vt/ to befriend, become friendly with. *bint-i ṣadqit walad baṭṭaal* my daughter has made friends with some good-for-nothing. **2** /vi/ to give confirmation or endorsement. - vn *miṣadqa*; ava *miṣaadiq*.

اتصادق *ʃitṣaadiq* or *ʃiṣṣaadiq* /vi/ **1** (impersonal) passive of *ṣaadiq* 2. *ʃit-taṣariiḥ itṣaadiq ɛaleeha* the permits were endorsed. **2** to become friendly. *ʃitṣadqu maɛa* (or *wayya*) *baɛḍ* they became friends. - vn *taṣaaduq*↑; ava/iva *mitṣaadiq*.

ص د م

صدم *ṣadam (u, i)* /vt/ **1** to bump, knock. *ṣadamit-u ɛarabiyya w-maat* a car hit him and he died. **2** to shock. *ṣadam-ni l-xabar ɢawi* the news was a great shock to me. — /vi/ **3** to bump, knock. *ṣadam fiyya waad ṣuɤayyar* a small boy bumped into me. - vn *ṣadm, ṣadamaan*; ava *ṣaadim*; pva *maṣduum*.

صدمة *ṣadma* /n pl *-aat*/ **1** bump, jolt, shock, impact. **2** shock, disappointment. *ṣadmit-i fiik kaanit kibiira* my disappointment in you was great.

اتصدم *ʃitṣadam* or *ʃiṣṣadam* /vi/ **1** to collide. **2a** to be shocked. **2b** to be disappointed. - ava/iva *mitṣidim*.

انصدم *ʃinṣadam* = *ʃitṣadam*. - vn *ʃinṣidaam*; ava/iva *minṣidim*.

صادم *ṣaadim* /vt/ to collide with, crash into. - vn *ṣidaam, muṣadma*; ava *miṣaadim*.

مصادمة *muṣadma* /n pl *-aat*/ collision.

اتصادم *ʃitṣaadim* or *ʃiṣṣaadim* /vi/ to be in collision. *ʃiṣṣadmu maɛa baɛḍ' fir-raʃy* their opinions clashed. - vn *taṣaadum*; ava *mitṣaadim*.

تصادم *taṣaadum* /n pl *-aat*/ collision.

اصطدم *ʃiṣṭadam* /vi/ to collide, impact. *ʃil-mooga l-ḥamla tiṣṭidim bil-ʃiryal bitaaɛ gihaaz il-istiqbaal* the carrier wave strikes the wireless receiver's aerial. *ʃiṭ-ṭayyaara ṣṭadamit bil-burg* the plane crashed into the tower. - vn *ʃiṣṭidaam*; ava *miṣṭidim*.

اصطدام *ʃiṣṭidaam* /n pl *-aat*/ collision, crash.

ص د ى [1]

صدأ *ṣada'*[1] /n/ **1** rust, oxide (on metals). **2** *[bot]* plant rust.

صدّى *ṣadda* **1** /vt/ to cause to rust. *maɛruuf ʃinn ir-ruṭuuba bi-ṭṣaddi l-ḥadiid* it is well known that moisture causes iron to rust. **2** /vi/ to rust, oxidize. *bi-nidhin il-ḥadiid ɛaʃaan ma-yṣaddii-ʃ* we paint the iron so it doesn't rust. *ḥadiid miṣaddi* rusty iron. || *muxx-u mṣaddi* he's dull-witted. - vn *taṣdiyya*; ava/pva *miṣaddi*.

ص د ى [2]

صدى *ṣada'*[2] /n pl *ʃaṣdaaʃ*↑/ echo. || *ʃeeh ṣada l-xabar da fin-naas* how do people react to this news?

ص د ى و م

صديوم *ṣudyuum* <prob Fr> /n/ sodium.

ص ر ح

صراحة *ṣaraaḥa* /n/ frankness, candour. *ʃismaɛ ya ɛamm' mā-fii-ʃ ʃaḥsan miṣ-ṣaraaḥa* listen here, my man, the best thing is to be frank! || *bi-ṣaraaḥa* frankly, as in *kunt' b-ṣaraaḥa mitɤaaẓ ɢawi* frankly, I was extremely annoyed.

صريح *ṣariiḥ* /adj pl *ṣuraḥa*/ frank, candid. *ma-na dayman ṣariiḥ maɛaak* but I'm always frank with you! *bi-ṣariiḥ il-ɛibaara* without mincing any words.

أصرح *ʃaṣraḥ* /el/ more/most candid or frank.

صرّح *ṣarraḥ* /vi/ **1** to give official permission or authorization. *ṣarraḥuu-li b-duxuul il-manṭiqa l-ɛaskariyya* they authorized me to enter the military zone. **2**↑ to make an official statement or announcement. *ṣarraḥ masʃuul bi-ntihaaʃ il-ʃazma* an official spokesman announced the end of the crisis. - vn *taṣriiḥ*; ava/pva *miṣarraḥ*.

تصريح *taṣriiḥ* /n/ **1** /pl *taṣariiḥ*/ permit, permission, authorization. *taṣriiḥ duxuul* entry permit. **2** /pl *-aat*/ (official) statement, announcement.

اتصرّح *ʃitṣarraḥ* or *ʃiṣṣarraḥ* /vi/ (impersonal) passive of *ṣarraḥ*. *ʃitṣarraḥ-lu b-ʃusbuuɛ ʃagaaza* he was allowed one week's leave. - iva *mitṣarraḥ*.

صارح *ṣaariḥ* /vt/ to be frank with. *ṣarḥit-ni bi-lli f-ɢalb-a-ha* she made a clean breast to me of what was on her mind. - vn *muṣarḥa, miṣarḥa*; ava *miṣaariḥ*.

اتصارح *ʃitṣaariḥ* or *ʃiṣṣaariḥ* /vi/ to speak frankly to one another. *ʃitṣarḥu wayya baɛḍ' b-kull illi f-nafs-u-hum* they were frank with one another about everything on their minds. - ava *mitṣaariḥ*.

ص ر خ see س ر خ: *ṣarax, ṣarx, ṣarxa, ṣaruux, ṣarrax*

ص ر ر [1]

صرّ *ṣarr[1] (u)* /vt/ **1** to tie up, lace up (the opening of a bag etc.). *ʕana ɛaayiz ʕaſuuf il-ɋamḥ[i] ɋabl[i] ma tṣurr iz-zikiiba* I want to look at the wheat before you tie up the sack. **2** to pack, bundle up (in a cloth, the corners of which are knotted or laced together). *miraat-u ṣarrit il-ɤada btaaɛ-u f-mandiil wi-ʃayyaɛit-u l-ɤeeṭ* his wife tied up his lunch in a cloth and sent it to the field. - vn *ṣarr, ṣararaan*; ava *ṣaarir*; pva *maṣruur*.

صرّة *ṣurra[2]* /n pl *ṣurar*/ bundle (made in a cloth, the corners of which are knotted or laced together), small bag, purse.

اتصرّ *ʕitṣarr* or *ʕiṣṣarr* /vi/ passive of *ṣarr[1]*. - iva *mitṣarr*.

أصرّ *ʕaṣarr* /vi/ to insist, persist. *waaḥid min iṭ-ṭarafeen bi-yṣirr[a] ɛala mawɋif-u* one of the parties is insisting on his position. - vn *ʕiṣraar*; ava *muṣirr*.

إصرار *ʕiṣraar* /vn/ ‖*sabɋ il-ʕiṣraar [leg]* premeditation, as in *ɋatl maɛa sabɋ il-ʕiṣraar (wat-taraṣṣud)* premeditated murder.

ص ر ر [2]

صرّ، ثرّ *ṣarr[2] (u)* **1** /vt/ to cause to leak or dribble. *ʕiſ-ſiwaal ṣarr ir-ruzz[i] kull-u* the sack let all the rice trickle out. **2** /vi/ to leak out, dribble out. *ʕir-ruzz[i] bi-yṣurr[i] min ik-kiis* the rice is running out of the bag. *ʕil-mayya nazla ṣararaan mil-ɋirba* water is leaking (steadily) out of the water-skin. - vn *ṣararaan, ṣarr*; ava *ṣaarir*.

ص ر ر [3]

صرّ *ṣarr[3]↑ (u)* /vi/ to make a screeching or grating sound. *ṣarr[a] ɛala snaan-u* he ground his teeth. - ava *ṣaarir*.

ص ر ر [4] see س ر ر [3] : *ṣurra[1]*

ص ر ص ر

صرصر *ṣarṣar* /vi/ to make a screeching or grating sound. - vn *ṣarṣara*; ava *miṣarṣar*.

صرصار *ṣurṣaar* /n pl *ṣaraṣiir*/ cockroach.

صرصور *ṣarṣuur* /n pl *ṣaraṣiir*/ **1** cockroach. ‖*ṣarṣuur il-ɤeeṭ* cricket. **2** (also *ṣarṣuur il-widn*) cavity behind the lobe of the ear, (loosely) lobe of the ear.

ص ر ط

الصراط *ʕiṣ-ṣiraaṭ* /n/ the Path of Righteousness. *maafi ɛaṣ-ṣiraaṭ* behaving righteously, following the straight and narrow.

ص ر ع

صرع *ṣaraɛ[1] (a)* /vt/ **1** to startle, alarm. *daaxil yitsaḥḥab fiḍ-ḍalma ṣaraɛ-ni* coming in stealthily in the dark he gave me a fright. **2** to fluster, agitate. - vn *ṣaraɛaan*; ava *ṣaariɛ*; pva *maṣruuɛ*.

صرع *ṣaraɛ[2]* /n/ epilepsy.

اتصرع *ʕitṣaraɛ* or *ʕiṣṣaraɛ* /vi/ **1** to be startled, be alarmed. **2** to be flustered, be agitated. - iva *mitṣiriɛ*.

انصرع *ʕinṣaraɛ* = *ʕitṣaraɛ*. - iva *minṣiriɛ*.

صارع *ṣaariɛ* /vt/ to wrestle with, struggle with. *muṣarɛit il-moot* wrestling with death. - vn *muṣarɛa, ṣiraaɛ↑*; ava *miṣaariɛ*.

مصارعة *muṣarɛa, miṣarɛa* /n/ wrestling. *muṣarɛit is-siiraan* bull-fighting.

مصارع *muṣaariɛ* /n */ wrestler.

اتصارع *ʕitṣaariɛ* or *ʕiṣṣaariɛ* /vi/ to wrestle (with o.a.). - ava *mitṣaariɛ*.

ص ر ف [1]

صرف *ṣaraf[1] (i)* /vt/ **1** to spend (money). *ʕana b-aṣrif ɛaleeha ɛiſriin gineeh ʕusbuuɛi* I spend twenty pounds a week on her. *ʕiṣrif ma fil-geeb yiʕtii-k ma fil-ɤeeb [prov]* (spend what is in your pocket and more will come providentially) ≈ *carpe diem*. **2** to disburse, issue, dispense. *ʕid-duktuur ṣaraf-li ʃahaada ṣiḥḥiyya* the doctor issued me a health certificate. *ʕig-gamɛiyya b-tiṣrif it-tamwiin bil-biṭaɋaat* the co-operative distributes rationed goods on (presentation of) ration cards. *ruḥt il-muruur ṣarafuu-li ruxṣa gdiida* I went to the traffic department and they issued me with a new licence. **3** to exchange (paper for money or goods). *mif mumkin tiṣrif if-fiik da ʕilla fil-xaarig* you can only cash this cheque abroad. *xud ir-rufitta btaɛt-ak lil-ʕagzaxaana ɛaʃaan yiṣrifu-haa-lak* take your prescription to the pharmacy and they'll dispense it for you. **4** to drain, draw off. *ɋabl[i] ma nizraɛ il-ʕarḍ[i] niṣrif minha l-mayya z-ziyaada lli fiiha* before we sow the land we drain off the excess water in it. **5** to exorcize. *ʕiſ-ſeex yiɛraf yiṣrif il-ɛafariit ɛan il-malbusiin* the sheikh can exorcize spirits from the possessed. - vn *ṣarf*; ava *ṣaarif*; pva *maṣruuf*.

¶ *ṣaraf (in-)naẓar* (1) to divert attention, as in *ʕil-muẓahraat ṣarafit in-naẓar ɛan ziyaarit ir-raʕiis* the demonstration diverted attention from the president's visit. (2) to pay no attention, be distracted. *niṣrif in-naẓar ɛan il-mawḍuuɛ da* we'll ignore that question. *bint-i xayfa law iftaɤalit tiṣrif in-naẓar ɛan ig-gawaaz* my daughter is afraid that if she works she will lose interest in marriage.

صرف *ṣarf* **1** /vn/ ‖*gihat iṣ-ṣarf* authority disbursing funds. - *ʕamr[i] ṣarf* or *ʕiẓn[i] ṣarf* (1) banker's order. (2) authorization to issue supplies etc. - *bi-ṣarf in-naẓar*

ʕan disregarding, not including. — /n/ **2** funds allocated for current expenditures. *miraat-i maska ṣarf il-beet* my wife is in charge of the house-keeping money. **3** drainage water. **4** *[ling]* morphology.

صرفيّة *ṣarfiyya* /n pl *-aat*/ payment.

مصروف *maṣruuf*[1] /n/ **1** /pl *-aat*/ **1a** expenditure. **1b** allowance. *maṣruuf geeb* pocket money. **2** /pl *maṣariif*/ cost, expense. *maṣariif diraasa* tuition costs. ‖*nafar maṣariif [leg]* one who discharges a fine by work.

صرف *ṣirf* /adj invar/ pure, unmixed, sheer. *ʕarabi ṣirf* pure Arab. *di mayya ṣirf* that's pure water. *ɋumaaf ɋuṭn' ṣırf* pure cotton cloth.

صرفة *ṣirfa* /n pl *ṣiraf*/ expedient, way out. *fuuf lak ṣirfa fıl-mawḍuuʕ da* see if you can find a way out of this business.

صرافة *ṣiraafa* /n/ **1** money changing. **2** handling of cash.

صرّاف *ṣarraaf* /n */ **1** cashier. ‖*raaḥ yiḥaasib iṣ-ṣarraaf* to go and spend a penny. **2** /also pl *ṣayaarif, ṣayarfa*/ money changer. **3** /also pl *ṣayaarif, ṣarraafa*/ *[rur]* land-tax collector.

صرّيف *ṣarriif*↓ /n pl *ṣarriifa*/ *[rur]* land-tax collector.

مصرف *maṣraf* /n pl *maṣaarif*/ **1** land drainage canal. ‖*maṣraf miirı [obsol]* drainage canal constructed and controlled by the government. **2**↑ bank.

مصرفي *maṣrafi*↑ /adj/ pertaining to a bank. *fiik maṣrafi [finan]* bank draft.

اتصرف *ʔitṣaraf* or *ʔiṣṣaraf* /vi/ passive of *ṣaraf*. -iva *mitṣirif*.

انصرف *ʔinṣaraf* /vi/ **1** to go away, turn away. ‖*ʔinṣiraaf [mil]* dısmiss! -*daftar il-ḥuḍuur wil-inṣiraaf* ledger for signing in and out. **2** = *ʔitṣaraf*. -vn *ʔinṣiraaf*; ava/iva *minṣırif*.

صرّف *ṣarraf* /vt/ **1a** to discharge, deal with. *ṣarraft' ʔumuur-i* I dealt with my affairs. ‖*ṣarraf-ni ʕaɛmil ʔeeh* tell me what to do, suggest a solution to me. **1b** to commission (s.o.) to deal (with s.th.). *ṣarraft-u f-ʔumuur-i* I charged him to handle my affairs. **2a** to drain. *ṣarrafu l-mayya mil-ʔarḍ* they drained the water from the land. *ṣarrafu l-ʔarḍ' mil-mayya* they drained the land of the water. **2b** to dıspose of, distribute (merchandise). *taagir il-gumla bi-yṣarraf il-biḍaaʕa ʕan ṭariiɋ tuggaar ıl-ɋaṭṭaaʕi* the wholesale merchant disposes of the goods via the retail merchants. **3** to cause to depart. *ṣarraf iḍ-ḍıyuuf* get rid of the guests! -vn *taṣriif*; ava/pva *miṣarraf*.

تصريفة *taṣriifa* /n/ **1** / pl *taṣariif*/ = *ṣirfa*. **2** /pl *-aat*/ instance noun of *taṣriif*.

اتصرّف *ʔitṣarraf* or *ʔiṣṣarraf* /vi/ **1** to act, behave. *tismaḥ li-bn-ak yiṣṣarraf kida* do you allow your son to behave in this way? **2a** to take steps, take appropriate action, act as one sees fit. *ʔiza ḥaṣalit dawfa ʔil-ʔidaara ḥa-titṣarraf* if there's any disturbance, the administration will take appropriate steps. *ʔil-ḥukuuma b-titṣarraf fi-maʃaakil if-faɛb* the government is taking action to deal with the people's problems. *ʔaxuu-ya b-yıtṣarraf fi-ʔamwaal il-ɋeela* my brother looks after the family's property. ‖*ʔil-maxzangi bi-yɋuulu ʔiṭṣarraf fıl-ɋuhda* the steward, they say, has disposed (illegitimately) of what is in his custody. **2b** to cope, manage. *m-aɛraf-f aṭṣarraf ʔizzaay law gooz-i maat* I don't know how I'd cope if my husband died. ‖*yiṣṣarraf ʔayy' kalaam* he does any old thing to get by. -*ʔaɛmil ʔeeh fil-muʃkila di*. -*ʔiṣṣarraf* 'What shall I do about this problem?' 'Find your way out of it.' -vn *taṣarruf*; ava *miṭṣarraf*.

تصرّف *taṣarruf* /n/ **1** /vn/ ‖*taḥt' taṣarruf* ... at the dispos-al of .... -*sariiʕ it-taṣarruf* quick-witted, enterprising. -*ʕadiim it-taṣarruf* witless, helpless. **2** /pl *-aat, -aat*/ (piece of) behaviour, (course of) action. *ʔit-taṣarruf iṣ-ṣaḥḥ' fil-ḥaala di ɤeer kida* that is not the right thing to do in this situation. *taṣarrufaat-ak baɋit fiḍiiḥa* your behaviour has become a scandal!

[2] ص ر ف

صرف *ṣaraf*[2] *(u)* /vi/ to use trimmings (on a galabiya, *gibba* or other item of men's clothing). -vn *ṣarf*; ava *ṣaarif*; pva *maṣruuf*.

مصروف *maṣruuf*[2] /coll n/ trimmings, accessories (for men's garments).

مصاريف *maṣariif* = *maṣruuf*[2].

[1] ص ر م

صرمة *ṣarma* <prob P *charm*> /n pl *ṣuram*/ pair of (old) shoes. ‖*ʔiḍrab id-dinya ṣarma* (hit the world with old shoes) take it easy, don't worry (said to person worried by a problem). -*ɋarabit nafs-a-ha sittiin ṣarma* ≈ she was filled with regret, she kicked herself. -*ɋarabit wiff-a-ha sittiin ṣarma* (she hit her face with sixty pairs of old shoes) ≈ she plastered her face with make-up. -*wiff-u maḍruub miit ṣarma* he looks very sullen. -*ya-bn iṣ-ṣarma* ≈ son of a clapped-out whore! -*ɛaṣ-ṣarma l-ɋadiima* ≈ (take it) and good riddance to you! as in *bukra taaxud filuus-ak ɛaṣ-ṣarma l-ɋadıima* you'll get your bloody money soon enough and good riddance to you!

صرماتي *ṣuramaati* /n pl *-yya*/ *[deris]* cobbler, shoe-mender.

[2] (ص ر م)

صرم *ṣurm* /n/ *[coarse]* arsehole. ‖*ṣurm-u ṭiliɛ fii* ≈ he

bust his arse to get it. - *kull il-maṣaayib fiik ya ṣurm id-diik [prov]* all catastrophes are (contained) in you, you cock's arse! (to a vile person). - *kull il-maṣaayib ṣaabit farag lamma farag ṣurm-u xarag [prov]* ≈ Farag was hit by so many disasters that he could take no more (of one beset by misfortunes).

صرمة *ṣirma* /n pl *-aat, ṣiram*/ chuck (of a drill used for precision work).

ص ر ى

صارى *ṣaari* /n pl *ṣawaari*/ **1** mast (of a boat). ‖*ṣaari ṣaʕqa* lightning conductor. **2** flagpole.

ص ص ى

صاصى *ṣaaṣa* /vi/ to cheep. *ʔil-katakiit bi-tṣaaṣi guwwa l-ʔafaṣ* the chicks chirp in the cage. - vn *miṣaṣiyya*; ava *miṣaaṣi*.

ص ط ب see م ص ط ب : *maṣṭaba*

ص ع ب

صعب *ṣuʕub, ṣiʕib (a)* /vi/ to become (more) difficult. *ʔif-fuxl' b-yiṣʕab ʕaleena kull' fwayya* work gets gradually more difficult for us. - vn *ṣuʕuuba, ṣuʕubiyya*; ava *ṣaʕbaan*.

¶ *ṣiʕib ʕala* to evoke pity in (s.o.). *ʔaḥwaal-u b-tiṣʕab ʕalayya* I feel sorry for him in such circumstances. *ṣaʕbaan ʕaleeha l-masakiin dool* she feels sorry for those poor people.

صعوبه *ṣuʕuuba* /n pl *-aat, -aat, ṣiʕaab*/ difficulty. *bi-yiftiki min ṣuʕuubit il-ʔimtiḥaan* he complains of the difficulty of the exam.

صعوبيّة *ṣuʕubiyya* = *ṣuʕuuba*.

صعب *ṣaʕb* /adj/ hard, difficult, trying. *ʔimtiḥaan ṣaʕb* a difficult exam. *ʔil-fuqara bi-yʕiiʃu f-ẓuruuf ṣaʕba* the poor live under trying conditions. *kull' fee ʔ fi-ʔawwil-u ṣaʕb [prov]* everything is difficult at first. ‖*ʕumla ṣaʕba* hard currency.

أصعب *ʔaṣʕab* /el/ more/most difficult etc.

مصاعب *maṣaaʕib* /pl n/ difficulties.

صعّب *ṣaʕʕab* /vt/ to make difficult, complicate. *ʔil-ḥall' da yṣaʕʕab il-mas ʔala* this solution would only complicate the matter. - vn *taṣʕiib* ava/pva *miṣaʕʕab*.

اتصعّب *ʔitṣaʕʕab* or *ʔiṣṣaʕʕab* /vi/ **1** to smack the lips as an expression of dismay or regret. **2** to be made difficult. *ʔil-imtiḥanaat bi-titṣaʕʕab kull' sana ʕan illi ʕabliiha* every year the exams are made more difficult than the year before. - ava/iva *mitṣaʕʕab*.

استصعب *ʔistaṣʕab* /vt/ **1** to consider difficult. *ʔistaṣʕabu l-imtiḥaan* they found the exam difficult. **2** to select for difficulty. *ʔistaṣʕab ʔayy' suʔaal wi-sʔal-ni fii* choose me any difficult question and try it on me. - vn *ʔistiṣʕaab*; ava *mistaṣʕab*.

ص ع د

صعد *ṣaʕad↑ (a, yaṣʕud)* /vi/ to rise, ascend. *ʔil-giil iṣ-ṣaaʕid* the rising generation. ‖*ʕiid iṣ-ṣuʕuud [Chr]* Feast of the Ascension. - vn *ṣuʕuud*; ava *ṣaaʕid*.

صعيد *ʔiṣ-ṣiʕiid* /prop n/ Upper Egypt.

صعيدى *ṣiʕiidi* /pl *ṣaʕayda*/ **1** /adj/ from or of Upper Egypt. **2** /n/ an Upper Egyptian. *kull illi yiigi min iṣ-ṣaʕayda fayda [prov]* an Upper Egyptian is only good for what you can get out of him. *ma-fii-ʃ ḥawaleen iṣ-ṣaʕayda fayda [prov]* there is no benefit in anything to do with the Upper Egyptians.

صعّد *ṣaʕʕad* /vt/ **1** *[mil]* to escalate (e.g., an attack). **2** *[admin]* to pass (s.th.) up a chain of command. **3** *[pol]* to vote (s.o.) onto a higher committee. - vn *taṣʕiid*; ava *miṣaʕʕad*.

اتصعّد *ʔitṣaʕʕad* or *ʔiṣṣaʕʕad* /vi/ passive of *ṣaʕʕad*. - iva *mitṣaʕʕad*.

اتصاعد *ʔitṣaaʕid↑* or *ʔiṣṣaaʕid↑* /vi/ to be given off, rise (of vapours etc.). *fii ʔabxira saamma b-titṣaaʕid wi-tiʕlaʕ ʔasnaaʔ it-tafaaʕul* there are toxic vapours which are given off and rise up during the reaction. - vn *taṣaaʕud*; ava *mutaṣaaʕid*.

تصاعدى *taṣaaʕudi↑* /adj/ ascending. *tartiib taṣaaʕudi* ascending order.

ص ع ق

صعق *ṣaʕaq (a)* /vt/ to give (s.o.) a shock. - vn *ṣaʕaqaan, ṣaʕaq*; ava *ṣaaʕiq*; pva *maṣʕuuq*.

صاعقة *ṣaʕqa, ṣaʕqa↑* **1** /n pl *ṣawaaʕiq*/ thunderbolt, bolt of lightning. *ṣaari ṣaʕqa* lightning conductor. **2** *ʔiṣ-ṣaʕqa* the Commandos (in the Egyptian army).

اتصعق *ʔitṣaʕaq* or *ʔiṣṣaʕaq* /vi/ to be thunderstruck. - iva *mitṣiʕiq*.

انصعق *ʔinṣaʕaq* = *ʔitṣaʕaq*. - iva *minṣiʕiq*.

ص ع ل ك

صعلكه *ṣaʕlaka* /n/ destitution, being down-and-out.

صعلوك *ṣaʕluuk, ṣuʕluuk* (also *zaʕluuk*) /n pl *ṣaʕaliik*/ pauper, down-and-out, bum. ‖*ṣaʕluuk mitqammiṣ* a well-dressed nobody. - *tiruuḥ feen ya zaʕluuk been il-muluuk* (what are you doing amongst kings, you bum?) ≈ keep out of your superiors' company.

اتصعلك *ʔitṣaʕlak* or *ʔiṣṣaʕlak* /vi/ to become or behave like a tramp or down-and-out. *ʔitṣaʕlak min maʃy-u maʕa fillit il-xanaafis* he's turned into a vagabond because of his keeping company with this group of hippies. - ava *mitṣaʕlak*.

ص غ ر

صغر *ṣiɣir, ṣuɣur (a)* /vi/ **1** to become small or smaller. *miʃiina nuṣṣ' saaʕa bass' w-ka-ʃinn il-masaafa ma-ṣiɣrit-ʃ* we walked for half an hour but it seemed that the distance didn't get any less. *ʃil-banṭaloon ṣiɣir ʕalayya* my trousers have become too small for me. **2** to become young or younger. *ʃil-ʃagaaza xallit-u zayy' ma ykuun ṣuɣur ʕaʃar siniin* having a holiday has made him look and feel ten years younger. - vn *ṣiɣar, ṣuɣr*.

صغر *ṣuɣr* /n/ **1** smallness. *ṣuɣr il-ʃibra xallaa-ni ma-ʃuft[a]-haa-ʃ* the needle was so small I didn't see it. **2** childhood, youth. *ʃibtada min ṣuɣr-u yʕaakis il-banaat fiʃ-ʃawaariʕ* from an early age he began to pester girls in the streets.

صغر *ṣiɣar↑* /n/ **1** smallness. *da yirgaʕ li-ṣiɣar ḥagm-u* this is owing to its smallness of size. **2** childhood, youth. *ʃit-taʕliim fiṣ-ṣiɣar ka-n-naqʃ[a] ʕal-ḥagar [prov]* what is taught in childhood is never forgotten.

صغير *ṣaɣiir* /n/ small cog-wheel (of a water-wheel) (see Pl.E, 8).

صغيرة *ṣaɣiira* /n pl *ṣaɣaayir*/ minor sin. *ʃil-kizb' min iṣ-ṣaɣaayir ʃinnama l-qatl' min il-kabaayir* lying is a minor sin while killing is a major sin.

صغيّر *ṣuɣayyar* (also *zuɣayyar*) /adj * and pl *ṣuɣaar*/ **1** small. *ʃiqṭaʕ-u ʕala ṣɣayyar* cut it small. *ṣuɣaar iz-zurraaʕ* small(-scale) farmers. **2** (also *ṣuɣayyar fis-sinn*) young. *ʃiṣ-ṣuɣaar ʃaḥibbaaʃ allaah [prov]* the young (or: children) are the beloved of God. *yiʕmiluu-ha ṣ-ṣuɣaar w-yuqaʕu fiiha l-kubaar [prov]* (the children start it, the adults fall into it) when children start a dispute, their parents become involved in it.

صغيّور *ṣuɣayyuur* (also *ṣuɣanṭaṭ, ṣuɣanṭuuṭ, ṣuɣannan, ṣuɣannuun, ṣuqanṭaṭ, ṣuqanṭuuṭ, ṣuɣaṭṭaṭ, ṣuɣaṭṭuuṭ, ṣuqaṭṭaṭ, ṣuqaṭṭuuṭ, zuɣanṭaṭ, zuɣanṭuuṭ, zuɣannan, zuɣannuun, zuqanṭaṭ, zuqanṭuuṭ, zuɣaṭṭaṭ, zuɣaṭṭuuṭ, zuqaṭṭaṭ, zuqaṭṭuuṭ*) /adj */ small and cute, tiny, wee.

أصغر *ʔaṣɣar* /el/ **1** smaller/smallest. **2** younger/youngest.

صغر *ṣaɣɣar* /vt/ **1** to make smaller, reduce, scale down. *ʃit-tarzi ṣaɣɣar il-huduum* the tailor took in the clothes. *niṣaɣɣar il-xaraayiṭ li-miqyaas munaasib* we reduce the maps to a suitable scale. **2** to cause to appear young(er). *ʃit-tasriiḥa g-gidiida ṣaɣɣarit-ha* the new hairstyle made her look younger. - vn *taṣɣiir*; ava/pva *miṣaɣɣar*.

اتصغّر *ʔitṣaɣɣar* or *ʔiṣṣaɣɣar* /vi/ **1** to be made smaller, be reduced or scaled down. **2** to be made to appear younger. - iva *mitṣaɣɣar*.

استصغر *ʔistaṣɣar* /vt/ **1a** to consider (too) small. *ʃil-gaahil bi-yistaṣɣar iʃ-ʃams[a] ʕaʃaan biʕiida* one who does not know better thinks the sun is small because it is far away. *ʃinta mistaṣɣar nayb-ak fil-laḥma* you think you have less than your fair share of meat? **1b** to consider (too) young. *ʃistaṣɣaruu-ni* (or *ʃistaṣɣaru sinn-i*) *rafaquu-ni* they decided I was too young and turned me down. **2** to belittle, underestimate. *fii naas bi-tistaṣɣar faʃ-ʃn il-mawquuʕ da* some people underestimate the importance of this matter. *ʃif-ʃabaab il-ʃayyam-di b-yistaṣɣaru f-ʕenee-hum ik-kubaar fis-sinn* young people these days don't respect their elders. **3a** to select for smallness. *ʃistaṣɣar ʕaṣaaya w-hat-ha* find a small stick and bring it! **3b** to select for youthfulness. - vn *ʃistiṣɣaar*; ava *mistaṣɣar*.

ص غ ط ط see ص غ ر : *ṣuɣaṭṭaṭ, ṣuɣaṭṭuuṭ*

ص غ ق و ل see ص غ ا [1] : *ṣaɣaquul ʃaɣaasi*

ص غ ن ط ط see ص غ ر : *ṣuɣanṭaṭ, ṣuɣanṭuuṭ*

ص غ ن ن ن see ص غ ر : *ṣuɣannan, ṣuɣannuun*

ص ف see و ص ف : *ṣifa*

ص ف ح [1]

صفحة *ṣafḥa* /n pl *-aat, ṣufaḥ↓*/ page. ‖*kurraas ṣafḥa w-ṣafḥa* exercise book with alternate blank and ruled pages.

صفيح *ṣafiiḥ* /n/ **1** thin sheet steel. **2** tin plate. *ʕilba ṣafiiḥ* tin can. ‖*lamba ṣafiiḥ* a small open-flame tin oil-lamp used in rural areas (see Pl.B, 2).

صفيحة *ṣafiiḥa* /n pl *ṣafaayiḥ*/ **1** piece of tin plate. **2** large metal can (commonly used as a rubbish bin). **3** blade (of a saw). **4** measure equivalent to twenty litres.

صفّح *ṣaffaḥ* **1** /vt/ to cover with metal sheeting. *ṣaffaḥu s-sanadiiq il-xaʃab biz-zink* they plated the wooden boxes with zinc. **2** /vi/ to be over-stimulated (of the mind). *dimaaɣ-i ṣaffaḥit leelit ʃimbaariḥ miʃ-ʃaay* ≈ I couldn't sleep last night because I'd been drinking tea. - vn *taṣfiiḥ*; ava/pva *miṣaffaḥ*.

مصفّح *miṣaffaḥ, muṣaffaḥ* /adj */ armoured. *ʒizaaz muṣaffaḥ* armoured glass. *ʕarabiyya mṣaffaḥa* armoured vehicle. ‖*raas-u mṣaffaḥa* (1) he's obstinate. (2) he's a night-owl, he stays up late.

اتصفّح *ʔitṣaffaḥ* or *ʔiṣṣaffaḥ* **1** /vt/ to leaf through (a book). **2** /vi/ to be plated. - ava/iva *mitṣaffaḥ*.

ص ف ح [2]

صفح *ṣafaḥ (a)* /vi/ to grant forgiveness. *ṣafaḥ ʕanni li-ʃinnaha kaanit ʃawwil ɣalṭa minni* he forgave me,

since it was my first mistake. - vn *ṣafḥ, ṣafaḥaan*; ava *ṣaafiḥ*.

صفح *ṣafḥ* /n/ forgiveness. *law kaan ɛaqib-ni kaan yibqa ʔahwan min ṣafḥ-u (ɛanni)* ≈ had he punished me, it would have been less painful than his forgiveness.

اتصفح *ʔitṣafaḥ* or *ʔiṣṣafaḥ* /vi/ (impersonal) passive of *ṣafaḥ*. *miʃ kull il-ɣalaṭaat yiṣṣifiḥ ɛanha* not all mistakes can be forgiven. - iva *mitṣifiḥ*.

صافح *ṣaafiḥ* /vt/ to shake hands with. - vn *miṣafḥa, muṣafḥa*; ava *miṣaafiḥ*.

اتصافح *ʔitṣaafiḥ* or *ʔiṣṣaafiḥ* /vi/ to shake hands (with o.a.). *baɛd il-liɛb itṣafḥu maɛa baɛḍ* after the game, they shook hands. - ava *mitṣaafiḥ*.

استصفح *ʔistaṣfaḥ* /vt/ to ask (s.o.) for forgiveness. *ruḥt astaṣfaḥ-u ɛan ɣalṭit-i lakinnu rafaḍ* I went to ask him to forgive my mistake but he refused. - ava *mistaṣfaḥ*.

ص ف ر [1]

صفر *ṣafar (u)* /vi/ to whistle. *ʔir-riiḥ bi-yuṣfur fiʃ-ʃibbaak* the wind whistles at the window. || *ʔir-riiḥ ṣafar fi-wdaan il-ḥuṣaan ma-ḥadd[i]-ʃ qidir yiwaqqaf-u* the horse went wild and nobody could stop him. - vn *ṣafr*; ava *ṣaafir*.

صفير *ṣafiir↑* /n/ whistle, whistling sound.

صفّارة *ṣuffaara* /n pl *-aat, ṣafafiir, safafiir*/ **1** whistle (sound). **2** whistle (instrument). *ḥalla b-ṣuffaara* pressure cooker. **3** six-holed single-reed flute. **4** siren. *ṣuffaarit ʔinzaar* warning siren.

اتصفر *ʔitṣafar* or *ʔiṣṣafar* /vi/ (impersonal) passive of *ṣafar*. || *zayy[i] ma ykuun itṣafar fi-wdaan-u* as if it has gone wild (of an animal). - iva *mitṣifir*.

صفّر *ṣaffar[1]* /vi/ **1** to whistle. || *widaan-i bi-tṣaffar* my ears are ringing. **2** to blow a whistle. - vn *taṣfiir, tasfiir*; ava *miṣaffar*.

اتصفّر *ʔitṣaffar[1]* or *ʔiṣṣaffar[1]* /vi/ (impersonal) passive of *ṣaffar[1]*. *miʃ ʕana lli yitṣaffar-lu miʃ-ʃibbaak* I am not one to be whistled at from the window. - iva *mitṣaffar*.

ص ف ر [2]

أصفر *ʔaṣfar* /adj, fem *ṣafra*, pl *ṣufr*/ **1** yellow. *balaḥ ʔaṣfar* yellow dates. || *ɛads[i] ʔaṣfar* husked lentils. - *ʔarḍ[i] ṣafra* soil of clay mixed with sand. - *ʔis-saraaya ṣ-ṣafra [deris]* mental hospital, as in *ḥaqq-ak tiruuḥ is-saraaya ṣ-ṣafra* you ought to be locked up. **2** pale, wan. **3** sorrel (of a horse).

صفرا، صفراء *ṣafra* /n/ bile.

الصفرة *ʔiṣ-ṣafra* /n/ jaundice.

صفراوى *ṣafraawi* /adj */ rancorous. || *mazaag ṣafraawi* a choleric temperament (one of the four cardinal humours).

صفار *ṣafaar* /n/ yellowness, yellow. || *ṣafaar ʃams* just before sunset. - *ṣafaar (beeḍ)* egg yolk.

صفارى *ṣafaari: ṣafaari ʃams* just before sunset. *bi-yruuḥu ɣeṭ-hum ṣafaari ʃams* they go to their fields in the late afternoon just before sunset.

صفّر *ṣaffar[2]* /vt/ to make yellow. *ʔis-sagaayir bi-tṣaffar is-sinaan* cigarettes yellow the teeth. - vn *taṣfiir*; ava *miṣaffar*.

اتصفّر *ʔitṣaffar[2]* or *ʔiṣṣaffar[2]* /vi/ to be made yellow. - iva *mitṣaffar*.

اصفرّ *ʔiṣfarr* /vi/ **1** to yellow, turn yellow. *waraq ik-kitaab iṣfarr[i] min if-ʃams* the pages of the book have yellowed from the sun. **2** to become pale or wan. - vn *ʔiṣfiraar*; ava *misfirr, miṣfirr*.

استصفر *ʔistaṣfar* /vt/ **1** to select for yellowness. **2** to reject for yellowness. - ava *mistaṣfar*.

(ص ف ر) [3]

صفر *ṣifr* (also *sifr[2]*) /n pl *ʔaṣfaar, ṣifaar*/ zero. || *ṣifr[a] ɛaf-ʃimaal* (zero written on the left-hand side) something completely worthless.

صفر *ṣafar* /n/ Safar, second month of the Muslim year.

ص ف ص ف [1]

صفصاف *ṣafṣaaf, ṣufṣaaf* /coll n/ willow(s). *ṣafṣaaf baladi* Egyptian willow (Salix safsaf). *ṣafṣaaf ʔumm if-fuɛuur* weeping willow (Salix babylonica).

صفصافة *ṣufṣaafa* /unit n, pl *-aat*/ a willow.

ص ف ص ف [2]

صفصف *ṣafṣaf[1], ṣafṣif* /vi/ to become depleted or whittled away. *ʔil-balad ṣafṣafit ɛaleena* we're the only ones left in the village. *ʔil-ḥikaaya ṣafṣafit ɛala ma-fii-ʃ* the matter came to nothing. - vn *ṣafṣafa*; ava *miṣafṣaf*.

ص ف ص ف [3]

صفصف *ṣafṣaf[2]* /prop n/ nickname for Mustafa or Safiya.

ص ف ط see س ف ط

ص ف ع

صفع *ṣafaɛ↑ (a)* /vt/ to slap. - vn *ṣafɛ*; ava *ṣaafiɛ*; pva *maṣfuuɛ*.

صفعة *ṣafɛa* /n pl *-aat*/ slap.

اتصفع *ʔitṣafaɛ* or *ʔiṣṣafaɛ* /vi/ to be slapped. - iva *mitṣifiɛ*.

ص ف ف

صفّ *ṣaff[1] (u)* /vt/ **1** to put in a row. || *ṣaff[i] ḥuruuf* type-

setting. **2** to arrange. *xallii-na nṣuff ik-karaasi* let's arrange the chairs. - vn *ṣafafaan, ṣaff*; ava *ṣaafif*; pva *maṣfuuf*.

صفّ *ṣaff*[2] /n pl *ʕaṣfuf, ṣufuuf, ṣufúfa*↓/ **1** row, line, rank. *nazzil ṣaff' snaan-i* he knocked my teeth out. ‖ *rayyis ṣaff* head chef. - *ṣaff' ẓaabiṭ* non-commissioned officer. - *huwwa f-ṣaff-i* he's on my side. **2** grade, form (in school).

صفّة *ṣuffa* /n pl *ṣufaf/ [rur]* alcove raised above floor level.

صفّاف *ṣaffaaf: ṣaffaaf ḥuruuf* typesetter.

مصفّ *maṣaff* /n pl *-aat*/ rack, holder (as, e.g., that which a peddler of cold drinks wears attached to his wrist and in which he puts his glasses).

صفّف *ṣaffaf* /vt/ to arrange. *miin illi ḥa-yiqdar yiṣaffaf ik-karaasi di kull-a-ha* who will be able to arrange all these chairs? *ʕil-bint' mṣaffifa faɛr-a-ha* the girl has done her hair. - vn *taṣfiif*; ava/pva *miṣaffaf*.

اصطفّ *ʕiṣṭaff*↑ /vi/ to line up. *ʕiṣṭaff ig-gamiiɛ fi-ṭabuur* everyone formed up into a line. - vn *ʕiṣṭifaaf*; ava *miṣṭaff*.

ص ف ق

صفقة *ṣafqa* /n pl *-aat*/ deal, bargain.

صفّق *ṣaffaq*↑ /vi/ to applaud, clap the hands. - vn *taṣfiiq*; ava *miṣaffaq*.

اتصفّق *ʕitṣaffaq* or *ʕiṣṣaffaq* /vi/ (impersonal) passive of *ṣaffaq*. *ʕahu da l-baṭal illi yistaahil ʕinnu yitṣaffaq-lu* this is the champion who deserves to be applauded. - iva *mitṣaffaq*.

ص ف و see ص ف ى : *ṣafwa*

ص ف ى

صفى *ṣifi (a)* /vi/ to become clear. *ʕil-mayya l-ɛikra tiṣfa b-ʃabba* turbid water becomes clear with (the use of) alum. ‖ *ʕil-gaww' ṣfii-lu* he had a clear field (in which to act). - vn *ṣafa, ṣafw*; ava *ṣaafi*.

¶ *ṣifi ɛala* to come down to, be reduced to. *baɛd id-dihn' kiilu l-laḥma ṣifi ɛala ʕaqall' min in-nuṣṣ* after (removing) the fat, the kilo of meat came down to less than half (a kilo).

صفا *ṣafa* /imper/ *[mil]* at ease!

صافى *ṣaafi* /adj */ **1** pure, unsullied, unblemished. *sumɛa ṣafya* an unsullied reputation. *ʕazraq ṣiini ṣaafi* clear Chinese blue. ‖ *ṣaafi ya laban* (pure milk!) all's well now! we've settled our dispute! **2** net. *ʕil-wazn iṣ-ṣaafi* the net weight.

صفوة *ṣafwa*↑ /n/ elite, best (of people). *ṣafwit il-maɛbuud* the chosen of God.

صفيان *ṣafyaan* /adj/ emaciated, sickly.

أصفى *ʕaṣfa* /el/ more/most unsullied or unblemished.

صفاية *ṣifaaya, ṣifaaya* /n pl *-aat, -aat*/ **1** remnant, remains. *yinaqqu l-ʕawwil wi-baɛdeen yidduu-na ṣ-ṣifaaya* they make their selection first and then give us what is left. **2** *[rur]* water still in an irrigation canal after it has been blocked at the mouth (the amount of water being calculated in order to avoid flooding the crops).

صفّاية *ṣaffaaya, ṣaffaaya* /n pl *-aat, -aat*/ strainer. *ṣaffaayit ʃaay* tea strainer. *ṣaffaayit ṭibaaq* dish-draining rack.

مصفى *maṣfa* /n pl *maṣaafi*/ **1** filter, strainer, colander. **2** drainage channel of a field.

صفّى *ṣaffa* /vt/ **1a** to strain. *nusluq il-makaroona w-baɛdeen niṣaffii-ha* we boil the pasta and then strain it. **1b** to drain. *baɛd itnaafar saaɛa min il-bidaar niṣaffi l-ʕarḍ' min il-mayya* twelve hours after sowing we drain the land of water. ‖ *ḍarab-u buks' ṣaffaa-lu ɛeen-u* he punched him and put out his eye. **2** to settle, straighten out. *laazim il-mudiir yiṣaffi ḥsaab-u yomiyyan* the director must settle his account daily. *ṣaffu l-xilaaf* they settled (their) differences. **3** to liquidate. *ṣaffu ʕamlak-hum wi-safru* they sold up their property and left. ‖ *taṣfiyit il-muusim* stocktaking sale. - *mubarayaat taṣfiyya* elimination matches (in a contest or championship). **4** *[naut]* to coil (a rope). - vn *taṣfiyya, taṣfiya*; ava/pva *miṣaffi*.

تصافى *taṣaafi* /pl n/ final remains (of, e.g., a stock of merchandise). *mayyit it-taṣaafi [rur]* water remaining in the main irrigation canals at the end of the irrigation cycle. - /adverbially/ *ʕil-mayya nazla taṣaafi* the water is trickling slowly down.

مصفّى *miṣaffi* /adj */ pure. ‖ *ʕibn' ḥalaal miṣaffi* a thoroughly good fellow.

اتصفّى *ʕitṣaffa* or *ʕiṣṣaffa* /vi/ passive of *ṣaffa*. - iva *mitṣaffi*.

صافى *ṣaafa* /vt/ to be faithful or true to. ‖ *dahr-i ṣafaa-ni* life is being good to me. - vn *miṣafiyya*; ava *miṣaafi*.

اتصافى *ʕitṣaafa* or *ʕiṣṣaafa* /vi/ passive of *ṣaafa*. - ava *mitṣaafi*.

اصطفى *ʕiṣṭafa* **1** /vt/ to choose, select. *rabb-i-na ṣṭafaa min been in-naas* God has singled him out (for his favours). **2** /vi/ to settle differences, effect a reconciliation. *ʕiṣṭafu maɛa baɛḍ* they became reconciled. *ʕiṣṭifi maɛaa* you deal with him! (I can't bear to). - ava *miṣṭifi*.

المصطفى *ʕil-muṣṭafa* /n/ the Chosen One (epithet of the Prophet Muhammed).

ص ق ر

صقر *ṣaqr* /n pl *ṣuqquur, ṣuqúra*/ falcon. ‖ *ʃanab-u yuqaf*

ɛalee ʃiʂ-ʂaqr (a falcon could perch on his moustache) ≈ he has a thick and luxuriant moustache (regarded as a sign of virility).

ص ق ط ط ط see ص غ ر : *ʂuqaṭṭaṭ, ʂuqaṭṭuuṭ*

ص ق ل [1]

صقل *ʂaqal (i)* /vt/ **1** to burnish (metal). **2** to finish (concrete). - vn *ʂaqil*; ava *ʂaaqil*; pva *maʂquul*.

مصقلة *maʂqala* /n pl *maʂaaqil*/ burnishing block or steel.

اتصقل *ʃitʂaqal* or *ʃiʂʂaqal* /vi/ **1** to be burnished (of metal). **2** to be finished (of concrete). - iva *mitʂiqil*.

ص ق ل [2] see س ق ا ل

ص ق ن ط ط see ص غ ر : *ʂuqanṭaṭ, ʂuqanṭuuṭ*

ص ك ك [1]

صكّ *ʂakk* /n pl *ʂukuuk*/ *[leg]* proof of contract, receipt. *ʃil-mustanadaat di b-tuɛtabar ʂakk[a] ɛala l-ħukuuma* these documents are considered binding on the government.

ص ك ك [2] see س ك ك [1]

ص ل see و ص ل : *ʂila*

ص ل ب [1]

صلب *ʂalab[1] (u)* **1** /vt/ to stiffen into an upright position, make upright. ‖*ʂalab ʈuul-u* (or *ħeel-u*) he stood up straight. *-ʂalab-ni ɛal-baab nuṣṣ[i] saaɛa* he kept me waiting at the door for half an hour. — /vi/ **2** to be stiff, be in an upright position. *markib ʂaalib* a ship in (proper) upright position (i.e. not listing). **3** to last (well), be of continuing use. *ʃil-kursi da ħa-yuʂlub maɛaak* that chair will last you well. - vn *ʂalb, ʂalabaan*; ava *ʂaalib*; pva *maʂluub*.

صلب *ʂulb* /n/ **1** steel. **2** core, central part. *ʂulb il-baħs* the core of the research. ‖*huwwa-bn-u min ʂulb-u* he's his father's son. — /adj invar/ **3** solid, stiff, hard. *da xaʃab ʂulb* that is very hard wood. **4** dependable. *walad ʂulb* a reliable boy.

صلب *ʂilib, ʂalib↑* /adj */ **1** stiff, inflexible. ‖*huwwa ʂilib ir-raʃy* or *dimaay-u ʂilib* he's obstinate, he's pig-headed. **2** tough, hard. *mawaadd[i] ʂaliba* solids.

أصلب *ʃaʂlab* /el/ harder/hardest.

صلابة *ʂalaaba* /n/ **1** hardness, toughness. **2** stamina, endurance.

صلابة *ʂilaaba* /n pl *-aat, -aat*/ prop, support.

اتصلب *ʃitʂalab[1]* or *ʃiʂʂalab[1]* /vi/ to become or be made upright. - ava/iva *mitʂilib*.

صلّب *ʂallib[1]* **1** /vt/ to fix firmly in position. *laɛeet-u mʂallib raas-u fil-baab wi-bi-yzuqq* I found him wedging his head against the door and pushing. ‖*leeh tiʂallib raʃy-ak kida* why are you so obstinate? **2** /vi/ to become stiff. *raɛabt-i ʂallibit mir-rumatizm* my neck got stiff because of rheumatism. - vn *taʂliib*; ava/pva *miʂallib*.

تصليبة *taʂliiba* /n pl *taʂaliib*/ prop, support.

اتصلّب *ʃitʂallib[1]* or *ʃiʂʂallib[1]* /vi/ **1** to become hard or stiff. *taʂallub if-farayiin* arteriosclerosis. **2** to be fixed firmly. - vn *taʂallub↑*; ava/iva *mitʂallib*.

ص ل ب [2]

صلب *ʂalab[2] (u)* /vt/ to crucify. - vn *ʂalb*; ava *ʂaalib*; pva *maʂluub*.

صليب *ʂaliib* /n pl *ʂulbaan*/ cross. *ʃiʂ-ʂaliib il-ʃaħmar* the Red Cross. *ʏurzit iʂ-ʂaliib [needlew]* cross-stitch. ‖*ɛiid iʂ-ʂaliib [Chr]* Finding of Holy Cross Day (September 27). *-ʂaliib faaḍi* and *ʂaliib malyaan* wooden lattice-work patterns (see Pl.G, 2, 3).

صليبة *ʂaliiba, ʂaliiba* /n pl *ʂalaayib*/ cross piece. *muftaaħ ʂaliiba [auto]* wheel spanner. *ʃiʂ-ʂaliiba [anat]* part of a ruminant's stomach having a honeycomb-like appearance, honeycomb tripe.

صليبى *ʂaliibi* /adj */ pertaining to crusades or crusaders. *ʃil-ħuruub iʂ-ʂalibiyya* the Crusades.

اتصلب *ʃitʂalab[2]* or *ʃiʂʂalab[2]* /vi/ to be crucified. - iva *mitʂilib*.

صلّب *ʂallib[2]* /vi/ **1** *[Chr]* to make the sign of the cross. *ʃil-qassiis ʂallib ɛal-mayyitiin* the priest made the sign of the cross over the dead. **2** *[acad]* to make a cross beside or through incorrect work. - vn *taʂliib*; ava *miʂallib*.

اتصلّب *ʃitʂallib[2]* or *ʃiʂʂallib[2]* /vi/ (impersonal) passive of *ʂallib[2]*. *ʃil-mazbaħ itʂallib ɛalee* the sign of the cross was made over the altar. - iva *mitʂallib*.

ص ل ب [3]

صلّب *ʂallib[3], ʂallab* /vt/ to fasten flimsily together. *ʂallab-li g-gazma l-vaayit ma ʃawʂal il-beet* just fix me the shoes so that they'll hang together till I get home. - vn *taʂliib*; ava/pva *miʂallab*.

مصلّب *miʂallab* /adj */ **1** flimsily hanging together. **2** on the point of tears.

اتصلّب *ʃitʂallab* or *ʃiʂʂallab* /vi/ **1** to be flimsily fastened together. **2** to (be ready to) seize upon a pretext. *ʃitʂallib-lu ɛala kilma w-raaħ ḍarab-u* he picked on one word he said and went and hit him for it. - ava/iva *mitʂallab*.

متصلّب *mitṣallab* or *miṣṣallab* = *miṣallab*.

ص ل ب ط see س ل ب ط

ص ل ح

صلح *ṣalaḥ*[1] *(u, a)* /vi/ to be suitable, be fit. *ṣaaliḥ lil-istiʕmaal* fit for use. *huwwa sakraan ma-yuṣluḥ-ʃ' lil-ʕamal* he's drunk, he's not fit to work. ‖ *ʃin ma-kan-ʃ' yiṣlaḥ ṭabla yiṣlaḥ ṭaar [prov]* if it won't serve one purpose it will serve another (said of something apparently useless). - vn *ṣalaḥaan, ṣalaḥiyya*; ava *ṣaaliḥ*.

صلح *ṣalaḥ*[2] *(i)* /vt/ **1** to reform, set right. ‖ *ʃallaah yiṣliḥ ḥaal-ak* (may God set your affairs aright) a polite way of seeking to silence someone. **2** to make peace between. - vn *ṣulḥ*; ava *ṣaaliḥ*; pva *maṣluuḥ*.

صلح *ṣulḥ* /n/ reconciliation. *muʕahdit ṣulḥ* peace treaty.

صلحة *ṣulḥa* /n/ **1** reconciliation. **2** *[magic]* charm carried by a possessed person in order to make peace with the possessing spirit(s).

صالح *ṣaaliḥ*[1] **1** /adj */ worthy, upright. *ʃil-ʃaʕmaal iṣ-ṣalḥa* good deeds. **2** /n/ benefit, interest. *li-ṣaaliḥ il-gamiiʕ* for the good of everybody. *ʃiṣ-ṣaaliḥ il-ʕaamm* the common good. ‖ *ma-lii-ʃ ṣaaliḥ* I'll have nothing to do with it!

الصالحيّة *ʃiṣ-ṣalḥiyya* /prop n/ es-Salihiya, a town in Sharqiya known in particular for its sweet melons.

صالحاوى *ṣalḥaawi* **1** /adj/ of or pertaining to es-Salihiya. **2** /n/ variety of large very sweet water-melon from the area around es-Salihiya.

صلّح *ṣallaḥ*[1] /n/ game in which one player stands with his back to the others, one hand showing under his armpit; another player then slaps his hand and the first player has to guess who it was.

أصلح *ʔaṣlaḥ*[1] /el/ **1** more/most suitable or fitting. **2** more/most correct.

صلاح *ṣalaaḥ* /n/ up rightness, righteousness. *ʃit-tarbiyya min il-ʃabaaʔ wiṣ-ṣalaaḥ min allaah [prov]* upbringing is from parents but righteousness is from God.

صلاحية *ṣalaḥiyya, ṣalaḥiya*↑ /n/ suitability. *ʃihaadit iṣ-ṣalaḥiya* certificate of proficiency (an in-service training certificate awarded to teachers without appropriate qualifications).

مصلحة *maṣlaḥa* /n pl *maṣaaliḥ*/ **1** interest, welfare. *ʃil-maṣlaḥa l-ʕamma* the common good. *liyya maṣlaḥa fil-ḥikaaya* I'm an interested party in the affair. *min maṣlaḥt-ak ʃinnak tibiiʕ-u* it's in your interest to sell it. **2** affair, matter. *ʃaruuḥ il-wizaara ʃaqḍi maṣlaḥa* I'm going to the Ministry to see to some business. *ʃana ʕaṣd-ak fi-maṣlaḥa* I've come to see you about something. **3** government agency or department. *maṣlaḥit il-misaaḥa* the Survey Department.

مصلحى *maṣlaḥi* /adj */ pertaining to government departments, official.

مصلحجى *maṣlaḥgi* /adj pl *-yya*/ opportunist, self-seeking.

اتصلح *ʔitṣalaḥ* or *ʔiṣṣalaḥ* /vi/ **1** to be reformed, be set right. **2** to be or become reconciled. - ava/iva *mitṣiliḥ*.

انصلح *ʔinṣalaḥ* = *ʔitṣalaḥ*. - iva *minṣiliḥ*.

صلّح *ṣallaḥ*[2] /vt/ **1** to mend, repair. *ʃin-naggaar ṣallaḥ it-tabuut* the carpenter fixed the water-wheel. *ʃumm-i ḥa-ṭṣallaḥ il-babuur ʕand is-samkari* my mother will have the primus stove mended at the welder's. **2** to improve, correct. *ʃil-waaḥid mumkin yiṣallaḥ-lu tullumiit kurraasa fil-ʃusbuuʕ* one may (have to) correct (up to) three hundred exercise books in one week. **3a** to adjust. *bi-yṣallaḥ ik-koora ʕal-ʃarḍ* he positions the ball on the ground. **3b** to tune (a musical instrument). **4** to even out, level. *baʕd it-taqriiṣ ṣallaḥi l-wiff* after you've made the dough into discs, even out the tops. ‖ *ṣallaḥ-lu ʕafaa* give him a slap on the back of the neck. - vn *taṣliiḥ*; ava/pva *miṣallaḥ*.

تصليح *taṣliiḥ* /n pl *-aat*/ repair.

اتصلّح *ʔitṣallaḥ* or *ʔiṣṣallaḥ* /vi/ passive of *ṣallaḥ*[2]. - ava/iva *mitṣallaḥ*.

صالح *ṣaaliḥ*[2] /vt/ **1** to reconcile. *ma-ḥadd'-ʃ yiqdar yiṣaliḥ-hum maʕa baʕḍ* no one can get them together again. *ʃin-naas ṣalḥuu-hum ʕala baʕḍ* people reconciled them. **2** to make up with. *ʃin ʃabuu-ya zaʕʕal-ni ʃumm-i ṭṣaliḥ-ni* if my father upsets me, my mother makes it up with me. - vn *miṣalḥa*; ava *miṣaaliḥ*.

مصالحة *muṣalḥa* /n pl *-aat*/ reconciliation.

اتصالح *ʔitṣaaliḥ* or *ʔiṣṣaaliḥ* /vi/ **1** to be reconciled. **2** to be comforted. - vn *taṣaaluḥ*↑; iva *mitṣaaliḥ*.

تصالح *taṣaaluḥ* /n/ *[leg]* settlement out of court.

أصلح *ʔaṣlaḥ*[2]↑ = *ṣalaḥ*[2]. *ʔid-dawa da muṣliḥ lil-miʕda* this medicine is good for the stomach. - vn *ʔiṣlaaḥ*; ava *muṣliḥ*.

إصلاحيّة *ʔiṣlaḥiyya* (also *ʔiṣlaḥiyyit ʔaḥdaas*) /n pl *-aat*/ (boys') reformatory, remand home.

اصطلح *ʔiṣṭalaḥ* /vi/ **1** to make up, become reconciled. *ʔiṣṭalaḥt' maʕaaha taani* I became reconciled with her again. **2** to agree, decide (upon s.th.). *laazim niṣṭiliḥ ʕala ramz' muʕayyan* we must agree on a certain sign. - vn *ʔiṣṭilaaḥ*; ava *miṣṭiliḥ*.

اصطلاح *ʔiṣṭilaaḥ* /n pl *-aat*/ expression, (technical) term.

مصطلح *muṣṭalaḥ* /n pl *-aat*/ (technical) term.

استصلح ʔistaṣlaḥ /vt/ **1** to consider correct. **2** to render fit (for use). *ʔistiṣlaaḥ il-ʔaraaḍi* land reclamation. **3** to select for correctness. - vn *ʔistiṣlaaḥ*; ava *mistaṣlaḥ*; pva *mustaṣlaḥ*.

ص ل د

صولد *ṣuld* <Fr *solde*> /n/ **1** all ready cash (on one's person). **2** collection of money or chips with which one is playing (in gambling).

ص ل د ى

صلدى *ṣuldi* <It *soldi*> /n pl *ṣalaadi*/ *[obsol]* small coin worth one-fifth of a piastre.

ص ل س ت

صوليست *ṣulist* <Fr *soliste*> /n/ vocal or instrumental soloist.

ص ل ص

صلصة *ṣalṣa* <It *salsa*> /n pl *-aat*/ tomato purée. ‖ *di ʔumuur ṣalṣa* this is a farce! - *ʔil-ḥikaaya baqit ṣalṣa* it turned out a mess.

ص ل ص ل [1]

صلصل *ṣalṣal* /vi/ to ring. *ṣalṣalit ig-garas* the ringing of the bell. - vn *ṣalṣala*; ava/pva *miṣalṣal*.

ص ل ص ل [2]

صلصال *ṣalṣaal, ṣilṣaal* /n/ plasticine.

ص ل ط ح

صلطح *ṣalṭaḥ* (also *salṭaḥ*) /vt/ **1** to flatten. *wabuur iz-zalaṭ bi-yṣalṭaḥ if-faariɛ* the steam-roller flattens the road (surface). *qafaa miṣalṭaḥ* the back of his head is flat. **2** to lay flat. *ṣalṭaḥt*^{i} *gism-i ɛak-kanaba w-nimt* I stretched myself out on the sofa and fell asleep. *ṣalṭaḥu l-ɛayyaan ɛala ṭarabeezit il-ɛamaliyyaat* they laid the patient on the operating table. — /vi/ **3** to lie down. *ʔil-ɛummaal ṣalṭaḥu taḥt*^{i} *fagara* the labourers lay down to rest under a tree. - vn *ṣalṭaḥa*; ava/pva *miṣalṭaḥ*.

مصلطح *miṣalṭaḥ* /adj */ flat. ‖*ṣaḥn*^{i} *mṣalṭaḥ* plate.

اتصلطح ʔiṭṣalṭaḥ or ʔiṣṣalṭaḥ /vi/ **1** to lie down. **2** to be flattened. **3** to be laid down. - ava/iva *miṭṣalṭaḥ*.

ص ل ع

صلع *ṣalaɛ* /n/ baldness.

صلعان *ṣalaɛaan* /n/ baldness.

أصلع ʔaṣlaɛ /adj, fem *ṣalɛa*, pl *ṣulɛ*/ bald.

اصلعّ ʔiṣlaɛɛ /vi/ to become bald. - ava *miṣlaɛɛ*.

ص ل ف

صلف *ṣalaf* /n/ arrogance.

صلافة *ṣalaafa* /n/ arrogance.

اتصالف ʔiṭṣaalif or ʔiṣṣaalif /vi/ to behave arrogantly. - ava *miṭṣaalif*.

ص ل ق ط

صلقط *ṣalqaṭ* (also *salqaṭ*): *(fi-)ṣalqaṭ (fi-)malqaṭ* in every single possible or conceivable place, as in *dawwart*^{a} *ɛaleeha ṣalqaṭ fi-malqaṭ ma-laqet-haa-ʃ* I looked high and low for her but I couldn't find her.

ص ل ل see ص ل و : *miṣalla, muṣalliin*

ص ل و

صلاة *ṣala, ṣalaaḥ*↑ /n, constr *ṣalaat*, pl *ṣalawaat*↑/ **1** *[Isl]* ritual prayer. *ṣalaat il-fagr* dawn prayer. **2** *[Chr]* prayer. *ʔiṣ-ṣala r-rabbaniyya* the Lord's Prayer. ‖*ṣalaat il-qandiil* see *qandiil*. **3** *ʔiṣ-ṣala* the set of five ritual prayers in Islam. **4** blessing (of God on the Prophet). *ya ṣalaat in-nabi* O blessing of the Prophet! (exclamation used in, e.g., warding off the evil eye, expressing deprecation, dismissing a request). *ɛaleehi ṣ-ṣalaatu was-salaam* may blessing and peace be upon him (i.e. the Prophet Muhammad, in response to *ṣalli ɛan-nabi*, q.v. below under *ṣalla*).

صلّى *ṣalla* **1** /vt/ to pray (fixed prayers). *ṣalleet il-fagr [Isl]* I prayed the dawn prayer. *bi-nṣalli l-quddaas marriteen kull*^{i} *yoom ḥadd* we celebrate the liturgy twice every Sunday. ‖*mayya mṣalliyya [Chr]* consecrated water. **2** /vi/ to pray. *fiḍilt*^{i} *ʔaṣalli lamma ḥaṣal-li w-lamma ḥaṣal-li baṭṭalt*^{i} *ʔaṣalli [prov]* I went on praying till I got what I wanted, and when I got what I wanted I stopped praying. *ṣallaa-li w-ʔana ɛayyaan [Chr]* he prayed for me when I was sick. - ava/pva *miṣalli*.

¶ *ṣalla ɛala* **1** *[Isl]* to invoke a blessing on. *ṣalli ɛan-nabi [Isl]* (bless the Prophet!) (1) exclamation of wonder or delight, as in *ʔaadi l-ɛaruusa ṣalli ɛan-nabi ʔaaxir gamaal* there's the bride! my! isn't she beautiful. (2) calm yourself! *ṣalli ɛala lli yiffaɛ fiik [Isl]* (bless him (Muhammad) who has compassion on you) formula used (1) at the beginning of an explanation or piece of advice. (2) as a conciliatory interjection. **2** *[Chr]* to pray over. *ʔil-qassiis bi-yṣalli ɛala l-mariiḍ wi-b-yirfim-u biz-zeet* the priest prays over the sick man and anoints him with oil. — *ṣalla bi- [Isl]* to lead in prayer. *ʔil-ʔimaam ṣalla bin-naas* the imam led the people in prayer.

مصلّى *miṣalla = miṣalliyya*.

مصلّية *miṣalliyya, maṣalliyya* /n pl *-aat*/ **1** prayer mat. **2** place for prayer (not having a pulpit).
مصلّين *muṣalliin, muṣalliyyiin* /pl n/ congregation.
اتصلى *ʔitṣalla* or *ʔiṣṣalla* /vi/ (impersonal) passive of *ṣalla. ʔil-ʕayyil itṣalla ʕalee* prayers were said over the child. - iva *mitṣalli*.

(ص ل و ن)
صالون *ṣaloon*[1], *ṣaluun*[1] <Fr *salon*> /n pl *-aat*/ **1a** drawing room, sitting room. **1b** sitting-room suite. **2** hairdresser's establishment. *ṣaloon tagmiil* beauty parlour. *ṣaluun ḥilaaqa* barber's shop. **3** saloon car (in a train).
صالون *ṣaloon*[2], *ṣaluun*[2] <Engl> /n/ saloon car.

[1] (ص ل ى)
صلاية *ṣalaaya*[1] /n pl *-aat*/ *[rur]* wooden mortar and pestle.
صلاية *ṣalaaya*[2] /n/ colostrum, beestings.

[2] ص ل ى see ص ل و : *ṣalla, miṣalliyya, muṣalliin, muṣalliyyiin, ʔitṣalla*

ص م ا ل
الصومال *ʔiṣ-ṣumaal* /prop n/ Somalia.
صومالى *ṣumaali* **1** /adj */ pertaining to Somalia. *laḥm' ṣumaali* meat imported from Somalia. **2** /n */ national of Somalia.

ص م ت
صمت *ṣamatˀ (u)* /vi/ to become silent. *film' ṣaamit* a silent film. - vn *ṣamt*; ava *ṣaamit*.
صمت *ṣamt* /n/ silence. *ʔiṣ-ṣamt' zeen wis-sukuut salaama [prov]* silence is best and safest.
مصمت *muṣmat* /adj */ solid, not hollow.

ص م د
صمد *ṣamad*[1] *(u)* /vi/ to hold out, put up resistance. *niqdar nuṣmud liḍ-ḍaγṭ il-iqtiṣaadi* we can stand up to economic pressure. - vn *ṣumuud*; ava *ṣaamid*.
صمد *ṣamad*[2] /n/ Everlasting One (epithet of God).
الصمدّية *ʔiṣ-ṣamadiyya* /n/ popular name for the Koranic *suurit il-ʔixlaaṣ*.

ص م ر
صمر *ṣamar, samar*[3] <Gr *samari*> /n/ saddle felt.

ص م ع
صومعة *ṣumáʕa* /n pl *ṣawaamiʕ*/ **1** dome-shaped coop made of mud (see Pl.C, 5). **2** grain store made of mud (see Pl.C, 4).

ص م غ see س م غ : *ṣamγ, ṣamγi, ṣammaγ, ʔitṣammaγ, taṣammuγ*

[1] ص م ل
صمل *ṣamal (u)* /vi/ to endure. *ʔiṣ-ṣadaaqa benhum ma-ṣamalit-f' sana* their friendship didn't last a year. ‖ *ʔil-fuul bi-yuṣmul ma-yxallii-ʃ il-waaḥid yiguuʕ bi-surʕa* beans stick to your ribs, you don't get hungry again quickly. - vn *ṣaml, ṣamalaan*; ava *ṣaamil*.
صملان *ṣamlaan* /adj */ enduring.
صمّل *ṣammal* /vt/ *[rur]* to reheat, re-bake (bread). - vn *taṣmiil*; ava/pva *miṣammil*.
اتصمّل *ʔitṣammil* or *ʔiṣṣammil* /vi/ *[rur]* to be reheated, re-baked (of bread). - vn *mitṣammil*.

[2] ص م ل see ص م و ل : *ṣamuula*

[3] ص م ل see ص م ا ل : *ʔiṣ-ṣumaal, ṣumaali*

ص م م
صم *ṣamm (u)* /vt/ **1** to close up, narrow up. *ṣumm' ʃafayf-ak* purse your lips. ‖ *ṣammeet widaan-ak ʕan il-ḥaqq* you turned a deaf ear to the truth. **2** to learn by heart, memorize. *ʔawwil ma yaaxud dars' yṣumm-u fil-ḥaal* as soon as he gets a lesson he learns it by heart. — /vi/ **3** to close up, become non-porous. *ʔil-ʔarḍ' di ṣammit laazim nuḥuṭṭ-i-lha raml* this earth has become very hard; we should add sand to it. - vn *ṣamm, ṣamamaan*; ava *ṣaamim*; pva *maṣmuum*.
أصمّ *ʔaṣamm* /adj, fem *ṣammaaʔ*, pl *ṣumm*/ deaf. *dool gamaaʕa ṣumm' bukm* (they are deaf and dumb) (1) ≈ they are (as stupid as) dumb beasts. (2) ≈ they are wise and trustworthy (because they keep their mouths shut).
صمام *ṣimaam* /n pl *-aat*/ valve, tube (of a radio and the like). ‖ *mizaan iṣ-ṣimaam* straw float (in angling).
صمامه *ṣimaama* /n pl *-aat*/ **1** stopper, bung. **2** valve.
صميم *ṣamiim* **1** /n/ heart, core, innermost part. *bi-tḥibb-u min ṣamiim ʔalb-a-ha* she loves him from the bottom of her heart. *ḍarba fiṣ-ṣamiim* a shattering blow. *ʔitbaḥisna f-ṣamiim il-muʃkila* we discussed the case thoroughly. **2** /adj/ genuine, true. *maṣri ṣamiim* an Egyptian through and through.
صمّام *ṣammaam* /n */ **1** one who learns by rote. **2** swot, grind.
اتصمّ *ʔitṣamm* or *ʔiṣṣamm* /vi/ passive of *ṣamm*. - iva *mitṣamm*.
انصمّ *ʔinṣamm* = *ʔitṣamm*. - iva *minṣamm*.
صمّم *ṣammim* **1** /vt/ to design. *muhandis kibiir ṣammim luhum il-ʕimaara* an eminent architect designed the

building for them. **2** /vi/ **2a** to resolve, determine. *min ʃawwil ḥayaat-i w-ʃana mṣammim (ɛala) ʃinni ʃabqa kaatib* I've been determined to be a writer all my life. **2b** to insist. *ṣammimt (ɛala) innu yiigi maɛaana* I insisted that he come with us. - vn *taṣmiim*; ava *miṣammim*.

تصميم *taṣmiim* /n pl *-aat*/ design. *taṣmiim ḥasab ṭalab ṣaaḥib il-ɛimaara* a design according to the wish of the owner of the building.

مصمّم *muṣammim* /n */ designer. *muṣammim ʃazyaaʃ* fashion designer.

اتصمّم *ʃiṭṣammim* or *ʃiṣṣammim* /vi/ passive of *ṣammim*. - iva *miṭṣammim*.

ص م و ل

صامولة *ṣamuula* <poss T *somun*> /n pl *ṣawamiil*/ nut (of a bolt). ‖*ṣawamiil muxx-u mafkuuka* he has a screw loose.

ص ن ب ر

صنبور *ṣanbuur*↑ /n pl *ṣanabiir*/ tap, faucet.

ص ن ت

صنّيت *ṣanniit* /n pl *ṣanniita*/ eavesdropper.

اتصنّت *ʃiṭṣannat* or *ʃiṭṣṣannat* /vi/ to listen to, eavesdrop. *ɛaamil is-siwitʃ' b-yiṭṣannat ɛaleena* the switchboard operator is eavesdropping on us. - vn *taṣannuṭ*; ava *miṭṣannaṭ*.

ص ن ت ى see س ن ت ى

ص ن ج

صنج *ṣanag* /n/ deafness.

أصنج *ʃaṣnag* /adj, fem *ṣanga*, pl *ṣung*/ deaf.

اصنجّ *ʃiṣnagg* /vi/ to become deaf! *ʃinta ṣnaggeet* have you become deaf! - ava *miṣnigg*.

ص ن د ر see س ن د ر

ص ن د ق see س ن د ق

(ص ن د ل)

صندل *ṣandal*[1] <Engl> /n pl *ṣanaadil*/ (pair of) sandals.

صندل *ṣandal*[2] <cf Gr, P, T, It> /n pl *ṣanaadil*/ **1** lighter, unpowered barge. **2** pontoon.

صندل *ṣandal*[3] /n/ sandalwood.

ص ن ر see ص ن ن ا ر : *ṣunnaara, ṣinnaara*

ص ن ط ر see س ن ط ر[1] : *ṣanṭar, ṣinṭar*

ص ن ع

صنع *ṣanaɛ (a)* /vt/ **1** to manufacture, make. *ʃil-libad di maṣnuuɛa min il-goox* these caps are made of felt. - /the literary passive imperfect occurs/ *kull il-ḥagaat di tuṣnaɛ fil-hind* all of these things are made in India. ‖*beeni w-beenu ma ṣanaɛ il-ḥaddaad* ≈ he and I are at daggers drawn. **2**↑ to carry out, perform. *ʃiṣnaɛ fiyya maɛruuf* do me a favour. - vn *ṣunɛ, ṣinaaɛa*; ava *ṣaaniɛ*; pva *maṣnuuɛ*.

صنعة *ṣanɛa* /n pl *ṣunaɛ, ṣanaayiɛ*/ **1** trade, craft, occupation. *ṣanɛa ḥilwa* a good trade (to be in). ‖*sabaɛ ṣanaayiɛ wil-baxt' ḍaayiɛ [prov]* ≈ all one's skills will not compensate for bad luck. **2** art, (acquired) skill, craftsmanship. ‖ *ʃit-tuḍl' ṣanɛa [prov]* ≈ coquettish dalliance is an art. - *bi-ṣanɛit laṭaafa* with persuasive charm.

صناعة *ṣinaaɛa* /n pl *-aat, ṣanaayiɛ*↑/ **1** craft, skill. *madrasit il-funuun wiṣ-ṣanaayiɛ* the School of Arts and Crafts. **2** industry. **3** manufactured product.

صناعى *ṣinaaɛi* /adj */ **1** industrial. *ʃintaag ṣinaaɛi* industrial production. **2** processed. *laban ṣinaaɛi* powdered milk (for babies). **3** artificial. *ḥariir ṣinaaɛi* synthetic silk. *sinaan ṣinaɛiyya* false teeth.

¶ *ṣinaɛiyyan* /adv/ synthetically, artificially. *mawadd' mxallaqa ṣinaɛiyyan* materials made up synthetically.

صانع *ṣaaniɛ* /n pl *ṣunnaaɛ*/ artisan, craftsman.

مصنوعات *maṣnuɛaat* /pl n/ manufactured goods, merchandise. *maṣnuɛaat gildiyya* leather goods.

صنايعى *ṣanayɛi* /n pl *-yya*/ skilled worker, craftsman, artisan.

مصنع *maṣnaɛ* /n pl *maṣaaniɛ*/ factory.

مصنعيّة *maṣnaɛiyya* /n pl *-aat*/ **1** cost of labour. *ʃid-dibla bi-tkallif ʃarbaɛa gneeh dahab wi-gneeh maṣnaɛiyya* the ring costs four pounds for the gold and a pound for the labour. **2** workmanship, craftsmanship.

اتصنع *ʃiṭṣanaɛ* or *ʃiṣṣanaɛ* /vi/ passive of *ṣanaɛ*. - iva *miṭṣiniɛ*.

صنّع *ṣannaɛ* /vt/ **1** to fashion, shape. *nibtidi nṣannaɛ in-naḥaas bif-fakl illi-ḥna ɛayziin-u* we begin to make the brass into the shape we want. **2** to manufacture. **3** to industrialize. - vn *taṣniiɛ*; ava *miṣannaɛ*.

اتصنّع *ʃiṭṣannaɛ* or *ʃiṣṣannaɛ* **1** /vi/ passive of *ṣannaɛ*. **2** /vt/ to simulate, feign. *bi-yiṭṣannaɛ in-noom* he pretends to be asleep. - vn *taṣannuɛ*; ava/iva *miṭṣannaɛ*.

اصطنع *ʃiṣṭanaɛ* /vt/ to simulate, feign. *ʃiṣṭanaɛit il-kusuuf* she feigned shyness. - vn *ʃiṣṭinaaɛ*; ava *miṣṭiniɛ*; pva *muṣṭanaɛ*.

اصطناعى *ʃiṣṭinaaɛi* /adj */ simulated, put on. *taṣarrufat-ha ʃiṣṭinaɛiyya ɋawi* her behaviour is very unnatural.

ص ن ف

صنف *ṣanf* /n/ **1** /pl *ʕaṣnaaf*/ type, sort. *fii ṣanfeen baljiiki w-ṭalyaani* there are two kinds, Belgian and Italian. ‖*wala ṣanf* ... not a single ..., as in *ʕil-ḥitta ma-fhaa-ʃ wala ṣanf' bani ʕaadam* there's no one there at all. **2** *ʕiṣ-ṣanf* hashish.

صنّف *ṣannaf, ṣannif* /vt/ **1** to classify. **2** to put together, compile. *ṣannif-li ʃwayyit buharaat wi-ḥyaat-ak* please give me an assortment of spices. *ṣannifit-li ʧiṣṣa ʧwiila tidḥak biiha ɛalayya* she concocted a long story to pull the wool over my eyes. - vn *taṣniif*; ava/pva *miṣannif, miṣannaf.*

مصنّف *muṣannaf* /n pl *-aat*/ item or piece of music in a variety show. *riqaabit il-muṣannafaat* department in broadcasting for variety show items.

تصنيفة *taṣniifa* /n pl *-aat, taṣaniif*/ assortment, variety.

اتصنّف *ʔitṣannaf* or *ʔiṣṣannaf* /vi/ **1** to be classified, be sorted. *ʔil-kuruut di b-titṣannaf (li-)magmuɛaat* these cards are sorted into groups. **2** to be put together, be compiled. - iva *miṭṣannaf.*

ص ن ف ر

صنفر *ṣanfar* /vt/ **1** to sandpaper, sand. **2** to make (s.o.) refined, polish the manners of (s.o.). - vn *ṣanfara*; ava/pva *miṣanfar.*

صنفرة *ṣanfara* **1** /vn/ ‖*ʔir-raagil da ɛaayiz ṣanfara* that man's manners need polishing. **2** (also *waraɋ ṣanfara*) /n/ sandpaper. *waraɋit ṣanfara* a piece of sandpaper.

مصنفر *miṣanfar* /adj */ frosted (of glass).

اتصنفر *ʔitṣanfar* or *ʔiṣṣanfar* /vi/ **1** to be sanded, be finished with sandpaper. **2** to be refined, be polished (of, e.g., manners). - vn *tiṣanfiir*; iva *miṭṣanfar.*

تصنفيرة *tiṣanfiira* instance noun of *tiṣanfiir. daxal il-faraḥ wi-huwwa miṭṣanfar tiṣanfiira w-ka-ʃinnu l-ɛariis* he came to the wedding dressed immaculately enough to be the bridegroom.

ص ن م

صنم *ṣanam* /n pl *ʕaṣnaam*/ idol. ‖*ya bagam ya ṣanam* ≈ you dumb ox!

صنّم *ṣannim* /vi/ to behave stolidly, dully or mutely. *waaɋif miṣannim ʒayy abu l-hool* standing mute like the Sphinx. - vn *taṣniim*; ava *miṣannim.*

ص ن ن [1]

صنّ *ṣann[1] (i, u)* /vi/ *[rur]* to pause, wait. *ṣannit ʃiwayya w-ɋalit-li laʕʕa* she paused a moment and then said 'No'. *ṣinn' ʕusbuuɛ wi-taɛalaa-li* wait for a week and come back to me. - vn *ṣann*; ava *ṣaanin.*

ص ن ن [2]

صنّ *ṣann[2] (i)* /vi/ to give off a pungent smell. - vn *ṣann, ṣananaan*; ava *ṣaanin.*

صنّة *ṣanna* /n/ strong odour, reek (particularly of urine or onions).

صنان *ṣunaan = ṣanna.*

صناّنة *ṣunaana = ṣanna.*

صنّن *ṣannin, ṣannan = ṣann[2]. ʔil-hiduum bi-tṣannin mil-ɛaraɋ* the clothes smell of sweat. - vn *taṣniin*; ava *miṣannan.*

ص ن ن ا ر

صنّارة *ṣunnaara, ṣinnaara* <T *sinare*> /n pl *ṣananiir*/ **1** fish-hook, (and by extension) fishing tackle. - /adjectivally/ *manga ṣunnaara* type of mango with a hook-like end. **2** *[carp]* finishing nail.

ص ن و ب ر

صنوبر *ṣinoobar* /coll n/ **1** pine(s). **2** pine-nut(s). - also *ṣineebar.*

ص ن ي

صينيّة *ṣaniyya, ṣiniyya* /n pl *ṣawaani*/ **1** tray, salver. **2** oven pan, shallow pan. ‖*ṣaniyyit baṭaaṭis* dish of potatoes (usually with tomatoes and onions) baked in a shallow dish. **3** *[Chr]* paten. **4** any circular object used as a disc for a revolving piece of machinery. **5** traffic circle, roundabout. **6** circular platform. **7** *[print]* galley.

ص ن ي ب ر

صنيبر *ṣineebar* /coll n/ pine-nut(s). - also *ṣinoobar.*

صنيبرة *ṣinebra* /unit n, pl *-aaṭ*/ pine-nut. *ḥalaɋ ṣinebra* an earring in the shape of a pine-nut.

صنيبراية *ṣinebraaya = ṣinebra.*

ص ه

صه *ṣah* /fem n/ fourteenth letter of the Arabic alphabet. - also *ṣaa, ṣaad.*

ص ه د

صهد *ṣahad (a)* /vi/ to be scorched. *ma-ʃaɋdar-ʃ aɋɛud fiʃ-ʃams' - wiʃʃ-i yiṣhad min il-ḥarr* I can't sit in the sun; the heat will scorch my face. - vn *ṣahd*; ava *ṣaahid.*

صهد *ṣahd* /n/ blast of heat.

صهدة *ṣahda = ṣahd.*

ص ه ر [1]

صهر *ṣahar (a)* /vt/ to melt down, smelt. *ḥadiid maṣhuur* molten iron. - vn *ṣahr*; ava *ṣaahir*; pva *maṣhuur.*

انصهر ʔinṣahar↑ /vi/ **1** to melt. *daragit il-ʔinṣiḥaar* melting point. **2** to be melted. -vn *ʔinṣihaar*; ava/iva *minṣihir*.
اتصهر ʔitṣahar or ʔiṣṣahar = *ʔinṣahar*. -ava/iva *mitṣihir*.

ص ه ر [2]
صهر ṣihr /n/ father- or brother-in-law.
صهرات *ṣihraat: min kitrit banaat-u ṣaarit ik-kilaab ṣihraat-u [prov]* he who has many daughters will take even dogs for sons-in-law.
الأصحار *ʔil-ʔaṣhaar* /pl n/ (all one's) in-laws male and female.
صاهر *ṣaahir* /vt/ to become related through marriage to (s.o.). -vn *muṣahra*; ava *miṣaahir*.
اتصاهر ʔitṣaahir or ʔiṣṣaahir /vi/ passive of *ṣaahir*. -iva *mitṣaahir*.

ص ه ر ج [1]
صهرج *ṣahrig, ṣahrag* **1** /vt/ to cause (fire) to blaze up. *ʔir-riiḥ ṣahrigit il-wilɛa* the wind made the fire blaze up. **2** /vi/ to blaze up (of fire). *ʔin-naar ṣahragit* the fire blazed up. -vn *ṣahraga*; ava *miṣahrig, miṣahrag*.

ص ه ر ج [2]
صهريج *ṣahriig, ṣihriig* /n pl *ṣahariig*/ cistern, large storage tank (particularly for water).
صهريجي *ṣahriigi* /n/ type of *mafrafiyya* design (see Pl.G, 1, 7).

ص ه ل
صهل *ṣahal (a)* /vi/ to neigh (of a horse). -vn *ṣahiil*; ava *ṣaahil*.

ص ه ل ل
صهلل *ṣahlil* **1** /vt/ to liven up with merriment and noise. *ṣahlilu l-leela* they brought the party to life. **2** /vi/ to indulge in noisy merriment. *ḥa-nṣahlil il-lelaa-di* we're going to have a hell of a time tonight. -vn *ṣahlala*; ava/pva *miṣahlil*.
صهليلة *ṣuhleela* /n pl *ṣahaliil*/ blaze.
اتصهلل ʔitṣahlil or ʔiṣṣahlil /vi/ to be livened up with merriment and noise. -vn *tiṣahliil*; ava *mitṣahlil*.

ص ه ي ن
صهين *ṣahyin* /vi/ to be unconcerned, pay no attention. *ṣahyin tifalɛaṣ [prov]* don't worry and you'll grow fat (i.e. be healthy). *ʔiz-zibuun il-mutɛib lamma yidfaɛ il-ḥisaab yiṣahyin ɛal-baqʃiif* a tiresome customer forgets the tip when he pays the bill. -vn *ṣahyana, ṣahyana*; ava *miṣahyin*.

ص ه ي و ن
صهيون *ṣahyuun* /prop n/ Zion.
صهيوني *ṣahyuuni* **1** /adj/ Zionist. ‖*raagil ṣahyuuni* a ruthless man. **2** /n pl *ṣahayna, ṣahayna*/ a Zionist.
الصهيونيّة *ʔiṣ-ṣahyuniyya* /n/ Zionism.

ص و ا ن
صوانة *ṣawaana* /n/ (star) marking on a horse's forehead.

ص و ب [1]
صاب *ṣaab (i)* /vt/ to hit, strike (a target or the like). *ʔin-naʃangi ṣaab il-hadaf* the marksman struck the target. *ɛeen wi-ṣabit-ni* someone gave me the evil eye. ‖*marra tṣiib wi-marra txiib [prov]* win a few, lose a few. -*kalaam-u ṣaayib* what he says is right. -vn *ṣayabaan*; ava *ṣaayib*.
صايب *ṣaayib* /n/ disaster, calamity. *ṣaab il-balad ṣaayib* disaster befell the town.
صواب *ṣawaab* /n/ rightness, correctness. *miʃ mumkin il-waaḥid yikuun ɛala ṣawaab ɛala ṭuul* you can't be right all the time.
أصوب ʔaṣwab [1] /el/ more/most right or correct. *ʔil-ʔaṣwab inn aqabil-hum* it would be better if I met them.
اتصاب ʔitṣaab or ʔiṣṣaab /vi/ to be afflicted, be struck. *ʔilaah-i yitṣaab fi-naḍar-u* may he be struck blind! *ʔitṣaab fil-ḥadsa talatt infaar* three people were injured in the accident. -iva *mitṣaab*.
انصاب ʔinṣaab = *ʔitṣaab*. -iva *minṣaab*.
صوّب *ṣawwib*↑ /vt/ to aim. *ṣawwabit-lu naẓra* she eyed him intently. -vn *taṣwiib*; ava *miṣawwib*.
اتصوّب ʔitṣawwib or ʔiṣṣawwib /vi/ to be aimed. -iva *mitṣawwib*.
أصاب ʔaṣaab↑ = *ṣaab*. *ʔil-muʔmin muṣaab* the righteous always suffer. -vn *ʔiṣaaba*; ava *muṣiib*; pva *muṣaab*.
أصوب ʔaṣwab [2] /vi perf only/ to be right. *ʔinta ʔaṣwabt illi ma-ɛazamt-hum-ʃ ɛal-faraḥ* you were right not to have invited them to the wedding.
إصابة ʔiṣaaba /n pl *-aat*/ injury.
مصيبة *muṣiiba* (also *niṣiiba*↓) /n pl *maṣaayib, naṣaayib*/ disaster, calamity. *ya mṣibt-i* woe is me! *ʔeeh il-muṣiiba lli-ḥna fiiha* what kind of trouble have we got into? *maṣaayib fi-zakaayib [prov]* ≈ it never rains but it pours. *maṣaayib naas ɛand naas fawaayid [prov]* (some) people's misfortunes are benefits for (other) people. ‖*ʔil-muṣiiba ʔinn* unfortunately, as in *ʔil-muṣiiba ʔinnaha miʃ fahma ḥaaga* unfortunately she understands nothing. -*hiyya di l-muṣiiba* that's the sad

part of it. - *gat-ak muṣiiba* ≈ go to hell!
مصاب *muṣaab* /n */ casualty, victim (of an accident).
استصوب *ʔistaṣwab, ʔistaṣwib* /vt/ to consider right or correct. - vn *ʔistiṣwaab*; ava *mistaṣwab*.

ص و ب ²
صوبة *ṣooba* <T *soba*> /n pl *-aat*/ shed in which young plants are cultivated. *ṣooba ɋzaaz* greenhouse.

ص و ت
صوت *ṣoot* /n pl *ʔaṣwaat*/ **1** voice. *ɛalli ṣoot-ak* speak up! **2** noise, sound. *ʔil-ʔawlaad yitsaḥḥabu min ɤeer ṣoot ɛala ṭaraṭiif ṣawabiɛ-hum* the children sneak out on tiptoe without a sound. **3** scream, cry. **4** vote.
صوتي *ṣawti* /adj/ **1** vocal. *ʔil-ʔaḥbaal iṣ-ṣawtiyya* the vocal chords. **2** pertaining to sound, audio-. *muʔassiraat ṣawtiyya* sound effects.
صيت *ṣiit* /n/ fame, renown. ‖ *ʔiṣ-ṣiit wala l-ɤina [prov]* having a reputation (for being rich) has more advantage than (actually) being rich.
صوات *ṣuwaat* /n/ screaming (in pain, fright, sorrow etc.). *ṣuwat-hum ɛili l-rabb is-sama* their anguished cries reached the skies.
صويت *ṣuwiit* /n/ screaming (in pain, fright, sorrow etc.). *ʔis-sitt' ɛirfit ɤaraḍ-u w-haat ya ṣuwiit* the woman understood his intentions and started yelling.
صيّيت *ṣayyiit* /n pl *ṣayyiita*/ Koran chanter, singer of religious songs.
صوّت *ṣawwat* /vi/ **1** to vote. *baɛd' ma yṣawwatu lagnit il-intixaab bi-tifriz il-ʔaṣwaat* after they vote, the election committee sorts the votes. **2** to scream or cry (in pain, fright or sorrow). *wara g-ganaaza niswaan bi-tṣawwat* following the funeral were women screaming in anguish. - vn *taṣwiit*; ava *miṣawwat*.
صيّت *ṣayyit* **1** /vt/ to sing the praises of, spread the (good) reputation of. *mif ɛarfa mṣayyitiin ṭabix-ha ɛala ʔeeh* I don't know why they are singing the praises of her cooking. **2** /vi/ to chant the Koran or religious songs. - vn *taṣyiit*; ava *miṣayyit*.
متصيّت *miṣṣayyat* /adj */ famous, renowned. *baɋa maɛɋuul ʔinnak ma-smiɛt'-f ɛan (fulaan) il-miṣṣayyat illi-sm-u ɛala kull' lsaan* it is incredible that you've never heard about the famous ... whose name is on everybody's lips.

ص و د
صودة، صودا *ṣooda* <Engl> /n/ **1** soda. *ʔiṣ-ṣooda l-kawya* caustic soda. **2** *karbunaat iṣ-ṣooda* sodium bicarbonate, baking-powder. **3** soda-water.

ص و ر ¹
صورة *ṣuura* /n pl *ṣuwar*/ **1** picture, photograph. *ṣuwar zeet* oil paintings. ‖ *ʔiṣ-ṣuura walla l-kitaaba* heads or tails? (when tossing a coin). **2** face card, court card. **3** copy, duplicate. **4** manner, mode. *miʃ ɛayzaa-ki tihmili fuɤl-ik biṣ-ṣuura di* I don't want you to neglect your work like this.
صوري *ṣuuri* /adj/ pertaining to outward form, formal. *ʔigraʔaat ṣuriyya* measures taken only for the sake of appearances.
صوّر *ṣawwar* /vt/ **1** to portray, represent, make manifest. *ʔil-masraḥiyya bi-tṣawwar il-faqr' fil-ʔaryaaf* the play portrays poverty in the countryside. ‖ *huwwa ginn' mṣawwar* he's a real demon, he's the Devil personified. - *ḥ-aṣawwar ɋatiil in-nahar-da* I'm going to kill someone today! **2** to photograph, film. *ʔit-tilivizyoon ḥa-yṣawwar ɛamaliyyit il-ʔinqaaz* television will film the rescue operation. ‖ *taṣwiir il-mustanadaat* photocopying. **3** *[mus]* to transpose. *ṣawwar in-naɤama di ɛala ḥarf' taani* transpose this tune into another key. - vn *taṣwiir*; ava/pva *miṣawwar*.
تصويرة *taṣwiira* /n pl *taṣawiir*/ **1** *[magic]* effigy. **2**↓ = *ṣuura*.
تصويري *taṣwiiri* /adj */ illustrative. *musiiqa taṣwiriyya* music accompanying the action in a film or play, background music.
مصوّر *muṣawwir*↑ /n */ **1** photographer. **2** cameraman (in motion pictures, television).
مصوّراتي *miṣawwaraati, muṣawwaraati* /n pl *-yya*/ photographer.
اتصوّر *ʔitṣawwar* or *ʔiṣṣawwar* /vi/ **1** to imagine. *ʔitṣawwar* (or *taṣawwar*) *baɋa* just imagine! *b-aḥibb-ik fooɋ ma titṣawwari* I love you more than you imagine. **2** to be photographed. ‖ *film' mitṣawwar* exposed film. - vn *taṣawwur*; ava/iva *mitṣawwar*.
تصوّر *taṣawwur*↑ /n pl *-aat*/ fantasy, flight of fancy. *ʔana ɛarfa di mugarrad taṣawwuraat ʔinnama xuft' barḍu* I know they were mere fantasies but I was still afraid.

ص و ر ²
الصور *ʔiṣ-ṣuur* /n/ *[Isl]* the trumpet on which it is believed two blasts will be blown at the end of the world - the first to destroy all living creatures, the second to resurrect them for judgement.

ص و ص و
صوصو *ṣawṣaw* /vi/ to cheep (of chicks). *ʔiwɛa tṣawṣaw* not a peep out of you! ‖ *(ɛaṣafiir) baṭn-i bi-tṣawṣaw* I'm very hungry. - vn *ṣawṣawa*; ava *miṣawṣaw*.

ص و ع

صاع *ṣaaʕ (u, i)* /vi/ to become a bum, become a down-and-out. *ʔif-ʃabaab ṣayʕiin fif-ʃawaariʕ wi-biyʕaksu innaas* the young men loaf about in the streets and pester people. - vn *ṣayaʕaan, ṣiyaaʕa*; ava *ṣaayiʕ*.

صايع *ṣaayiʕ* /adj * and pl *ṣuyyaʕ, ṣuyyaaʕ, ṣiyyaʕ, ṣiyyaaʕ*/ good-for-nothing. *da walad ṣaayiʕ* he's a good-for-nothing kid.

صوّع *ṣawwaʕ* /vt/ to sour, embitter or ruin the life of (s.o.). *ʔil-maṣaayib il-mitkarrara ṣawwaʕit ʕiʃt-i* constant misfortune has ruined my life. *yaama ṣawwaʕ-ni z-zaman* what a hard life I've had! - vn *taṣwiiʕ*; ava/pva *miṣawwaʕ*. see further under م ص و ع

ص و غ see س ى غ and ص ى غ

ص و ف

صوف *ṣuuf* /n pl *ʔaṣwaaf*/ wool. ‖*ṣuuf ʕaskari* thick plain polished cotton for women's clothes. - *yiḥraʕ ṣuuf-ak* damn you!

صوفة *ṣuufa* /n pl *-aat*/ **1** piece of woollen cloth. **2** a wool, a type of wool. **3** device used by women for artificial insemination.

صوفى *ṣufi* /adj */ Sufi, pertaining to Sufism. *ʔiṭ-ṭuruʕ iṣ-ṣufiyya* the Sufi orders.

صوّف *ṣawwif* /vi/ to become mouldy (particularly of bread). - vn *taṣwiif*; ava *miṣawwif*.

اتصوّف *ʔitṣawwif* or *ʔiṣṣawwif* /vi/ to become a Sufi. - vn *taṣawwuf*; ava *mitṣawwif*.

تصوّف *taṣawwuf* /n/ Sufism.

متصوّف *mitṣawwif* or *miṣṣawwif* /n */ Sufi.

ص و ل [1]

صول *ṣool*[1] /coll n/ dung of a donkey, mule or horse.

صولة *ṣoola* /unit n, pl *-aat*/ a piece of dung (of a donkey, mule or horse).

صلاية *ṣulaaya* = *ṣoola*.

صوّل *ṣawwil* /vi/ to defecate (of a donkey, mule or horse). - vn *taṣwiil*; ava *miṣawwil*.

[2] (ص و ل)

صول *ṣool*[2] <T *sol*> /n pl *-aat*/ *[obsol]* master-sergeant, sergeant-major.

صولة *ṣuula* <It *sagola*> *[naut]* /n/ signal halyard.

ص و م

صام *ṣaam (u)* **1** /vi/ to observe a ritual fast; abstain from food, drink, smoking and sexual relations from first light to sunset (for Muslims); abstain from all foods derived from animals, with the occasional exception of fish (for Copts). ‖*yiṣuum (yiṣuum) wi-yifṭar ʕala baṣala [prov]* he fasts (for ages) and then breaks his fast on an onion (a comment on illogical behaviour, or an expression of sympathy at a disappointing outcome). - *samak ṣaayim* fish which has not eaten for some time before being caught and whose intestines are therefore clean. - *ʕaʃara ṣayma* game of cards or backgammon in which the losing player does not win a single point. **2** /vt/ to fast during (a certain period). *ma-qdir-ʃ*[i] *yṣuum ramaḍaan kull-u* he could not fast the whole month of Ramadan. - vn *ṣoom, ṣiyaam*; ava *ṣaayim*.

صوم *ṣoom* /n/ fast, abstention. *min hina l-ʔaaxir if-ʃahr*[i] *ʔiʕmil ḥisaab-ak ʕala ṣ-ṣoom* from now on till the end of the month, tighten your belt. ‖ *ʔiṣ-ṣoom ik-kibiir [Chr]* Lent.

صومى *ṣoomi* /adj/ *[Chr]* without meat or the flesh of fish or poultry (of food).

صيام *ṣiyaam, ṣiyaam* /n/ fasting, abstention.

صيامى *ṣiyaami, ṣiyaami* /adj/ *[Chr]* not containing animal products, with the occasional exception of fish (of food prepared for consumption in a time of fast).

اتصام *ʔitṣaam* or *ʔiṣṣaam* /vi/ passive of *ṣaam*. - iva *miṭṣaam*.

صوّم *ṣawwim* /vt/ to make (s.o.) fast. *ʔil-ḥizn*[i] *ṣawwim-ha ʕan iz-zaad* sorrow made her lose the desire for food. - vn *taṣwiim*; ava *miṣawwim*.

اتصوّم *ʔitṣawwim* or *ʔiṣṣawwim* /vi/ to be made to fast. - iva *miṭṣawwim*.

ص و م ع see ص م ع

ص و ن [1]

صان *ṣaan (u)* /vt/ to look after, preserve, protect. *yiṣuun ʕarḍ il-ʕeela* he protects the honour of the family. *filuus-ak fil-ḥifẓ*[i] *wiṣ-ṣoon* your money is in safe keeping. *ʔiddi sirr-ak li-lli yṣuun-u [prov]* tell your secret (only) to him who will keep it. ‖ *ʔil-ʕarḍ il-maṣuun* or *ʔif-faraf il-maṣuun* or *ʔil-ḥaram il-maṣuun [obsol]* a formal term of reference to one's wife (now used jokingly). - vn *ṣiyaana, ṣiyaana, ṣoon*; ava *ṣaayin*, pva *maṣuun*.

صيانة *ṣiyaana, ṣiyaana* /n/ maintenance (of equipment etc.).

صوان *ṣiwaan, ṣuwaan* /n pl *ṣiwína, ṣawawiin*/ temporary pavilion of appliquéed or patterned cloth set up for funeral receptions and other large gatherings.

اتصان *ʔitṣaan* or *ʔiṣṣaan* /vi/ to be protected. - iva *miṭṣaan*.

انصان . *ʔinṣaan* = *ʔitṣaan*. - iva *minṣaan*.

ص و ن [2]
صوّان *ṣawwaan* (also *ḥagar ṣawwaan*) /coll n/ flint.
صوّانة *ṣawwaana* /unit n/ a flint, a piece of flint.
صوّاني *ṣawwaani* /adj/ pertaining to flint. *ḥagar ṣawwaani* flint.

ص و ن [3] see ص و ا ن : *ṣawaana*

ص و ي ا
الصويا *ʔiṣ-ṣooya* (also *fuul iṣ-ṣooya*) <prob Engl> /coll n/ soya beans.

ص ي ب see ص و ب : *ṣaab, ṣaayib, muṣiiba*

ص ي ت see ص و ت : *ṣiit, ṣayyiit, ṣayyit, miṣṣayyat*

ص ي ح
صاح *ṣaaḥ (i)* /vi/ to cry out, yell. *ʔid-diik il-faṣiiḥ fil-beeḍa yṣiiḥ [prov]* (the eloquent cock crows while still in the egg) ≈ talent shows itself early. *kitiir iṣ-ṣiyaaḥ ʔaliil iṣ-ṣuuf [prov]* ≈ empty vessels make the most sound. - vn *ṣiyaaḥ*; ava *ṣaayiḥ*.
صيّح *ṣayyaḥ* = *ṣaaḥ*. - vn *taṣyiiḥ*; ava *miṣayyaḥ*.

ص ي د
صاد *ṣaad* [2] *(i)* /vt/ **1** to catch (a prey). *tiigi tṣiid-u yṣiid-ak [prov]* ≈ biter bit. **2a** to hunt. **2b** to fish for (fish). - vn *ṣeed*; ava *ṣaayid*.
صيد *ṣeed* /n/ **1** hunting. *ṣeed iṣ-ṣaqr* falconry, hawking. **2** fishing. *markib ṣeed* trawler. *ʔiṣ-ṣeed biṣ-ṣinnaara* angling. *fabakit ṣeed* fishing net. ‖ *ʔiṣ-ṣeed fil-mayya l-ɣikra* fishing in troubled waters.
صيدة *ṣeeda* **1** /n pl *-aat*/ prey. **2** /adj invar/ worth having, desirable. *zibuun ṣeeda* a prize customer. *bint' ṣeeda* a girl who's a good catch, a good lay.
صيّاد *ṣayyaad, ṣayyaad* /n */ **1** hunter. **2** fisherman.
صيادية *ṣayyadiyya, ṣayadiyya* /n/ dish of fish baked with tomatoes and spices.
مصيدة *maṣyaḍa, maṣyada* /n pl *maṣaayid*/ trap. *maṣyadit firaan* mousetrap.
اتصاد *ʔiṭṣaad* or *ʔiṣṣaad* /vi/ to be caught (of a prey). ‖ *ʔin ʃa-lla tiṭṣaad fi-qalb-ak* (may you) drop dead! - iva *miṭṣaad*.
انصاد *ʔinṣaad* = *ʔiṭṣaad*. - iva *minṣaad*.
اتصيّد *ʔiṭṣayyid* or *ʔiṣṣayyid* /vt/ to be on the look-out for. *bi-yuqɛud ɛal-qahwa wi-yiṭṣayyid il-ʔaxbaar* he sits in the café and picks up what news he can. - ava *miṭṣayyid*.
اصطاد *ʔiṣṭaad* = *ṣaad* [2]. *ʔit-taragma bi-yiṣṭaadu z-zabaayin* the tourist guides hunt down the customers. *mamnuuɛ iṣ-ṣayyadiin yiṣṭaadu is-samak fil-manṭiqa di* fishermen are not allowed to fish in this area. ‖ *bi-yiṣṭaad fil-mayya l-ɣikra* he's fishing in troubled waters. - ava *miṣṭaad*.

ص ي د ل
صيدلة *ṣaydala* /n/ pharmacy. *kulliyyit iṣ-ṣaydaḷa* the College of Pharmacy.
صيدلي *ṣaydali* /n pl *ṣayadla*/ pharmacist.
صيدليّة *ṣaydaliyya*↑ /n pl *-aat*/ pharmacy, chemist's shop.

ص ي ر [1]
صار *ṣaar (i)* /vi/ **1** /preverb/ to start to, begin to. *ṣaarit in-naas tibuṣṣi-lu bi-ḥtiraam* people began to regard him with respect. **2** to become. *baɛd' ma ṭabbeet ṣirt[a] ɛaliil* after I fell down I became ill. *ṣaar ɛandi keef* I became addicted.
مصير *maṣiir* /n pl *maṣaayir*/ end, lot, outcome. *maṣiir-u maɛruuf* his fate is well known.
مصير، مسير *misiir* /n/ eventual outcome. *misiir-ak tikuun ʏani yoom min il-ʔayyaam* you're bound to be rich one of these days. *misir-ha titɛaddil* it'll turn out all right in the end.
صيّر *ṣayyar* /vt/ to change (s.o. or s.th.) into. *ṭuuba tṣayyar ṣ-ṣabiyya karkuuba* (the month of) Tuba (is so cold that it) turns a young girl into a hag. - ava *miṣayyar*.
اتصيّر *ʔiṭṣayyar* or *ʔiṣṣayyar* /vi/ to be changed into. - iva *miṭṣayyar*.

ص ي ر [2]
صير *ṣiir* <Copt> **1** /adj invar/ heavily salted. **2** /coll n/ small fish.
صيرة *ṣiira* /unit n, pl *-aat*/ a small fish. ‖ *ɛeen iṣ-ṣiira* a mineral spring near the mosque of the Imam Shafi'i said to posses curative powers.

ص ي ص
صيص *ṣiiṣ* /adj invar/ unripe, green (especially of dates).

ص ي ط
صاط *ṣaaṭ (i)* /vi/ to become watery (of food). *dimɛa ṣayṭa* thin gravy. - vn *ṣayaṭaan*; ava *ṣaayiṭ*.

ص ي ع see ص و ع : *ṣaaɛ, ṣaayiɛ*

ص ي غ see also س ي غ
صاغ *ṣaaʏ (i)* /vt/ to draft (a document etc.). - vn *ṣiyaaʏa*; ava *ṣaayiʏ*.

صيغة *ṣiiɣaˀ* /n pl *ṣiyaɣ*/ style, form. *ṣiiɣit it-taɛaaqud* wording of the contract.

اتصاغ *ʔitṣaaɣ* or *ʔiṣṣaaɣ* /vi/ to be drafted (of a document etc.). - iva *mitṣaaɣ*.

ص ى ف

صاف *ṣaaf (i)* /vi/ to become too ripe for use (of a crop). *ʔiz-zarɛa ṣaafit wi-hiyya ɛala ʔabuu-ha* the crop got too ripe while it was standing. - ava *ṣaayif*.

صيف *ṣeef* /n/ summer.

صيفى *ṣeefi* /adj */ of the summer. *maḥaṣiil ṣefiyya* summer crops.

صيفيّة *ṣefiyya* /n pl *-aat*/ a summer.

مصيف *maṣyaf* /n pl *maṣaayif*/ summer resort.

صيّف *ṣayyif* /vi/ to summer, aestivate. - vn *taṣyiif*; ava *miṣayyif*.

مصيّف *miṣayyif* /n */ aestivator.

ص ى م see ص و م : *ṣiyaam, ṣiyaam, ṣiyaami, ṣiyaami*

[1] ص ى ن

الصين *ʔiṣ-ṣiin* /prop n/ China. || *ʔiṣ-ṣiin if-faɛbiyya* jocular form of reference to the populous Guiza quarter of *bulaaq id-dakruur*.

صينى *ṣiini*[1] **1** /adj */ Chinese. – /n/ **2** /pl */ a Chinese. **3** /no pl/ the Chinese language.

صينى *ṣiini*[2] **1** /adj invar/ made of bone china or porcelain. **2** /n/ bone china, porcelain. *ʔanḍaf min iṣ-ṣiini baɛdi ɣasiil-u [prov]* (cleaner than china after washing) completely cleaned out (of money).

[2] ص ى ن see ص ن ى : *ṣaniyya, ṣiniyya*

[3] ص ى ن see [1] ص و ن : *ṣiyaana*

ض

ض ا د

ضاد *ḍaad* /fem n, pl *-aat*/ fifteenth letter of the Arabic alphabet. ‖*luɣat iḍ-ḍaad* the Arabic language. - also *ḍah*.

ض ا م

ضامة *ḍaama* <It *dama*> **1** /n/ **1a** draughts, checkers. **1b** /pl *-aat*/ square (in a checkered design). *ɡumaaʃ ḍamaat* checkered cloth. **2** /adj invar/ check, checkered, plaid. *ʃil-ɡumaaʃ iḍ-ḍaama* checkered cloth.

ض ا ن

ضانى *ḍaanı* (also *laḥm' ḍaani*) /n/ mutton, lamb.

ض ء ل

ضئيل *ḍaʃiil↑* /adj pl *ḍuʃaal*/ meagre. *kimmiyyaat ḍaʃiila* meagre quantities.

ضآلة *ḍaʃaala↑* /n/ meagreness.

اتضائل *ʃitḍaaʃil* or *ʃiḍḍaaʃil* /vi/ to grow smaller, dwindle. - vn *taḍaaʃul*; ava *mitḍaaʃil*.

استضأل *ʃistaḍʃal* /vt/ to consider meagre. - ava *mistaḍʃal*.

ض ب ب [1]

ضبّ *ḍabb[1] (u)ʃ* /vi/ to take a firm hold (of s.th.). *ḍabb' fi-xnaaɡ(-u)* to grab (s.o.) by the neck. - vn *ḍababaan, ḍabb*; ava *ḍaabib*; pva *maḍbuub*.

ضبّ *ḍabb[2]* /n pl *ḍubuub*/ pair of buck teeth.

ضبّة *ḍabba* /n pl *ḍubab*/ **1a** jaw. *ṭaɡm iḍ-ḍabba t-taḥtanıyya* a set of lower dentures. ‖*muftaaḥ bi-ḍabba* adjustable wrench. - *ḍabba fil-ʃarḍ' w-ḍabba fis-sama* (one jaw resting on the ground and the other raised as high up as the sky) ≈ very greedily, as in *gaay faatiḥ buɡɡ-u ḍabba fil-ʃarḍ' w-ḍabba fis-sama* he's coming expecting too much. **1b** denture. **2** wooden door lock (see Pl.C, 1). ‖*ḍabba w-muftaaḥ* three-cornered tear (in cloth).

اتضبّ *ʃitḍabb* or *ʃiḍḍabb* /vi/ to be taken hold of firmly. - iva *mitḍabb*.

انضبّ *ʃinḍabb* = *ʃitḍabb*. - iva *minḍabb*.

ضبّب *ḍabbab[1]* /vt/ to test (a water-melon) for ripeness by cutting out a rectangular segment. ‖*w-allaahi l-aḍabbab kirf-ak* by God I'll cut you open! - vn *taḍbiib*; ava/pva *miḍabbab*.

اتضبّب *ʃitḍabbab* or *ʃiḍḍabbab* /vi/ to be tested for ripeness by having a rectangular segment cut out (of a water-melon). - iva *mitḍabbab*.

ض ب ب [2]

ضباب *ḍabaab* /n/ fog, mist.

ضبابه *ḍabaaba* /unit n, pl *-aat*/ a patch of fog.

ضبّب *ḍabbab[2]* /vi/ to become foggy, become misty. ‖*muxx-i ḍabbab* my head became muzzy. - vn *taḍbiib*; ava *miḍabbab*.

ض ب ب و ر see **د ب ب و ر**

ض ب ب ي ش

ضبّيس *ḍubbeeʃ* /n pl *ḍubbeeʃa*/ one who spoils for a fight.

ض ب ح see **[2] د ب ح**: *ḍabaḥ, ḍabḥa, ʃitḍabaḥ, ʃinḍabaḥ*

ض ب ش [1]

ضبس *ḍabaʃ* /n/ weak-sightedness.

أضبس *ʃaḍbaʃ* /adj, fem *ḍabʃa*, pl *ḍubʃ*/ *[deris]* weak-sighted.

اتضبش *ʃitḍabaʃ* or *ʃiḍḍabaʃ* /vi/ to become weak-sighted. - ava *mıtḍıbiʃ*.

انضبش ʃinḍabaʃ = ʃitḍabaʃ. - ava *minḍibiʃ*.
ضبّش ḍabbaʃ/vi/ **1** to become weak-sighted. **2** to grope around blindly. - vn *taḍbiiʃ*; ava *miḍabbaʃ*.

ض ب ش [2] see ض ب ب ى ش : *ḍubbeeʃ*

ض بِ ط see ظ ب ط : *ḍabṭ, ḍaabiṭ, ʃinḍabaṭ, ʃinḍibaaṭ*

ض ب ع
ضبع ḍabaɛ *(u)* = ḍabbaɛ. - vn *ḍabɛ, ḍabaɛaan*; ava *ḍaabiɛ*.
ضبع ḍabɛ /n pl *ḍubúɛa, ḍibaaɛ, ḍubuuɛa*/ hyena. ‖*sabɛ' walla ḍabɛ* (lion or hyena) was it a success or a failure?
ضبعة ḍabɛa /n pl *-aat*/ jig fixture.
ضبّع ḍabbaɛ /vi/ to go to voracious excess. *ʃinta ḍabbaɛt' fil-ʃakl' kida leeh* why have you finished off so much of the food? *tuggaar is-suuq is-sooda ḍabbaɛu fin-naas* the black market dealers had the public at their mercy. - vn *taḍbiiɛ*; ava *miḍabbaɛ*.
اتضبّع ʃitḍabbaɛ or ʃiḍḍabbaɛ = *ḍabbaɛ*. - ava *mitḍabbaɛ*.

ض ب ع ن
ضبعن ḍabɛan /vi/ to go to voracious excess. - vn *ḍabɛana*; ava *miḍabɛan*.
اتضبعن ʃitḍabɛan or ʃiḍḍabɛan = *ḍabɛan*. - ava *mitḍabɛan*.

ض ج ج
ضجّ ḍagg *(i)* /vi/ to raise a hue and cry. *ʃiʃ-ʃaariɛ kull-u ḍagg' min ɛamayl-u* all the neighbourhood is up in arms over his behaviour. - vn *ḍagagaan*; ava *ḍaagig*.
ضجّة ḍagga /n/ uproar, tumult.
ضجيج ḍagiig = *ḍagga*.

ض ج ر
اتضجّر ʃitḍaggar or ʃiḍḍaggar /vi/ to grumble, complain. - ava *mitḍaggar*.

ض ج ع
ضجعان ḍagɛaan /adj */ reclining, recumbent. *ḍagɛaan ɛala l-kanaba* reclining on the sofa.
اضطجع ʃiḍṭagaɛ↑ or ʃiḍḍagaɛ↑ /vi/ to lie down, recline. - ava *miḍṭigiɛ*.

ض ح ض ح
ضحضح ḍaḥḍaḥ /vt/ to break the bones of, beat up. *ɢumt' min in-noom miḍaḥḍaḥ* I woke up (feeling) smashed. - vn *ḍaḥḍaḥa*; ava/pva *miḍaḥḍaḥ*.
اتضحضح ʃitḍaḥḍaḥ or ʃiḍḍaḥḍaḥ /vi/ to be beaten up. - iva *mitḍaḥḍaḥ*.

ض ح ك see د ح ك

ض ح و
ضحى ḍuḥa, ḍaḥa /n/ forenoon.
ضاحية ḍaḥya /n pl *ḍawaaḥi*/ suburb.
ضحويّة ḍaḥwiyya, ḍaḥawiyya /n pl *-aat, ḍaḥaawi*/ **1** forenoon, time around ten o'clock in the morning. **2** *[rur]* meal held on the morning of a feast day.
ضحّى ḍaḥḥa' /vt/ *[rur]* to delay till the late morning. - vn *taḍḥiyya*; ava *miḍaḥḥi*.
اتضحّى ʃitḍaḥḥa' or ʃiḍḍaḥḥa' /vi/ *[rur]* to delay till late morning. *ʃinta tḍaḥḥeet xaaliṣ ɛala ma ṣḥiit* it was nearly noon by the time you woke up. - ava *mitḍaḥḥi*.

ض ح ى [1]
ضحيّة ḍaḥiyya /n pl *ḍaḥaaya*/ **1** sacrifice, sacrificial offering. *ɛiid iḍ-ḍaḥiyya [Isl]* the Feast of the Sacrifice, Greater Bairam. **2** victim.
أضحى ʃaḍḥa: *ɛiid il-ʃaḍḥa [Isl]* the Feast of the Sacrifice, Greater Bairam.
ضحّى ḍaḥḥa[2] /vi/ to make a sacrifice. *ʃana mustaɛidd' ʃaḍaḥḥi b-ḥayaat-i ɛalaʃanha* I'm ready to lay down my life for her. - vn *taḍḥiyya, taḍḥiya*; ava *miḍaḥḥi*.
تضحية *taḍḥiyya, taḍḥiya*↑ /n pl *-aat*/ sacrifice. *taḍḥiyyaat iqtiṣadiyya* economic sacrifices.
اتضحّى ʃitḍaḥḥa[2] or ʃiḍḍaḥḥa[2] /vi/ to be sacrificed. - iva *mitḍaḥḥi*.

ض ح ى [2] see ض ح و : *ḍuḥa, ḍaḥa, ḍaḥya, ḍaḥḥa'*, *ʃitḍaḥḥa'*

ض خ خ
ضخ ḍaxx↑ *(u)* /vt/ to pump. *ʃiṭ-ṭurumba ma-bi-tḍuxx'-ʃ mayya kfaaya* the pump doesn't pump enough water. - vn *ḍaxx*; ava *ḍaaxix*; pva *maḍxuux*.
مضخّة *miḍaxxa*↑ /n pl *-aat*/ pump. *miḍaxxit ḥariiq* fire-extinguisher.
اتضخّ ʃitḍaxx or ʃiḍḍaxx /vi/ to be pumped. - iva *mitḍaxx*.
انضخّ ʃinḍaxx = *ʃitḍaxx*. - iva *minḍaxx*.

ض خ م
ضخم ḍaxm /adj pl *ḍuxaam, ḍixaam*/ enormous, huge. *ɛadad ḍaxm* a huge number.
أضخم ʃaḍxam /el/ more/most enormous, huger/hugest.
ضخّم ḍaxxam /vt/ to cause to become huge.

ma-tqaxxam-ʃ il-masʕala biʃ-ʃakl' da don't exaggerate the matter like that! - vn *taqxiim*; ava/pva *miqaxxam*.

اتضخّم *ʔitqaxxam* or *ʔiqqaxxam* /vi/ to become huge. - vn *taqaxxum*; ava *mitqaxxam*.

تضخّم *taqaxxum*↑ /n/ **1** *[finan]* inflation. **2** *[path]* distension.

استضخم *ʔistaqxam* /vt/ **1** to consider (too) huge. **2** to select for hugeness. - vn *ʔistiqxaam*; ava/pva *mistaqxam*.

ض د د

ضدّ *qidd* **1** /prep/ against. *ʔit-taʔmiin qidd il-maraq* insurance against illness. *qidd il-ħariiq* fire-proof. *ʕana miʃ qidd' ʧard-u* I've got nothing against firing him. **2** /n/ opposite. *ʔilli yziid ɛan ħadd-u yinqilib li-qidd-u [prov]* everything that goes to excess has the reverse of the desired effect.

ضدّيّات *qiddiyyaat* /pl n/ feud.

ضادّ *qadd* /vt/ to oppose, be hostile to. - vn *miqadiyya*; ava *miqadd, muqaadd*↑.

مضادّ *muqaadd*↑ /adj/ anti-, counter-. *huguum muqaadd* counter-attack. *madfaɛiyya muqaadda liʧayyaraat* anti-aircraft artillery. *muqaddaat ħayawiyya* anti-biotics.

اتضادّ *ʔitqadd* or *ʔiqqadd* /vi/ to be opposed. - iva *mitqadd*.

ض ر ب

ضرب *qarab (a)* /vt/ **1** to hit, strike, beat. *qarabt-a-ha ɛalqa* I gave her a hiding. *qarab ik-koora b-rigl-u* he kicked the ball. *ʔiqrab-u bil-maʧwa* knife him! ‖ *qarab il-gamuusa ɛeen* he put the evil eye on the buffalo. - *qarab-ni maqlab* he played a dirty trick on me. - *qarab id-dinya ṣarma* he let the world go hang. - *qarab il-wadaɛ* (or *ir-raml*) to divine by shells (or by sand). - *qarab quʃaaʧ* to take a piece (in a game). - *qarab bulʧa* to take a stroll. - *qarab ʧuub* to make bricks. - *qarab ɛumla* to mint coin. - *yiqrab wi-ylaaqi* he's good at thrust and parry. - *qarab ṣuħubiyya* to strike up a friendship. - *qarab ... wiff* to give ... a coat of paint. - *qarab(-u) ɛala ɛeen(-u)* to knock (s.o. or s.th.) out of the running, beat (s.o. or s.th.) hollow. - *qarab masal* to give an example. **2** to let loose, let off, fire off. *qarab ʧalqa* he fired a shot. *qarabu naar fil-hawa* they fired into the air. *qarab id-dinya ʧabanga* he let the world go hang. *qarab ẓarʧa* he let off a fart. *qarab-li tilifoon* he phoned me. *qarab ik-kilaks* he sounded the horn. *qarab noobit iṣ-ṣaħayaan* he sounded reveille. *qarab in-nuur ik-kibiir* he flashed his headlights. *qarab-li salaam* he saluted me. *qarabu ħalaqiyya ħawaleen il-beet* they threw a cordon around the house. *qarabtᵃ ɛeen-i ʃmaal wi-ymiin* I cast glances to left and right. ‖ *qarab tafliisa* to go bankrupt. - *qarab ɛafara* (or *waaħid wi-talatiin*) *[coarse]* to masturbate, toss off. **3** to produce, give off. *gism-u qarab ʕaħmar* his body flushed. *ʔif-fatla qarabit gudur-ha* the seedling took root. **4** to play (a musical instrument). *bi-yiqrab il-kamanga* he plays the violin. **5** to push in, insert. *qarab is-silk' fil-masuura* he inserted the wire into the pipe. *qarab il-filuus fi-geeb-u* he pocketed the money. **6** to multiply. *ʔiqrab ʔitneen fi-tneen* multiply two by two. **7** to stake (money, at cards). *ħ-aqrab xamsa saaɤ* I'll stake five piastres. **8** to churn, beat, mix. *laban qarb* buttermilk. *ʔiqrab il-beeq fi-baɛq-u* beat the eggs together! ‖ *ʔil-wiski maqruub* the whisky is adulterated. **9** to hull (rice). — /vi/ **10** to beat, make a beating. *qalb-i b-yiqrab* my heart is beating. *ʔid-diik bi-yiqrab b-ginaaħ-u* the rooster beats his wings. ‖ *qarabt' fid-durg* I rummaged in the drawer. - *ʔid-dinya b-tiqrab wi-tiqlib* everything's topsy-turvy. **11** to go off, fire. *ʔil-madfaɛ qarab* the cannon went off. *ʔig-garas qarab* the bell rang. *fardit kawitf' qarabit* one tyre burst. *damm-u qarab* (1) he had a (brain) haemorrhage. (2) he burst a blood vessel (with anger). **12** to take effect, have pronounced effect. *ʔil-ʃazma qarabit* the crisis struck. *ħaẓẓ-u qarab* his luck came up. *ʕakiid il-ʔisʧuwaana ħa-tiqrab* the record will definitely be a hit. **13** to go bad, spoil (of food). *ʔil-mangaaya qarabit fiʃ-ʃams* the mango went bad in the sun. **14** to copulate (of a male). *ʔit-toor ɛaagiz ɛan iq-qarb* the bull is incapable of mating. - vn *qarb*; ava *qaarib, qarbaan*; pva *maqruub*.

ضربة *qarba* /n pl *-aat, qarabaat*/ **1** /inst n/ a stroke, a blow. *qarabaat il-qalb* heartbeats. *qarbit ʃams* sunstroke. *qarbit marma* goal kick. ‖ *qarbit miɛallim* master-stroke. - *qarba f-qalb-ak* ≈ drop dead! **2** *[mus]* beat. **3** *[naut]* grommet.

مضروب *maqruub* /adj * and pl *maqariib*/ wretched, rotten. *yiqtaɛ-ak ya maqruub* blast you, you scoundrel!

ضريبة *qariiba* /n pl *qaraayib*/ **1** tax. *maṣlaħit iq-qaraayib* Internal Revenue Agency. **2** quantity of seven ardebs (used in measuring rice only).

ضريبي *qariibi*↑ /adj */ pertaining to taxation.

ضرّاب *qarraab* /n pl *qararriib*/ large marble used for shooting at smaller ones in the game of *turungeela* (q.v.).

ضرّابة *qarraaba* /n/ **1** /pl *-aat*/ **1a** instrument (usually a rolled handkerchief) used in administering the prescribed strokes in children's games (e.g., the game of *ʧaab* (q.v.)). **1b** the person holding the *qarraaba* in children's games. **2** (also *qarraabit il-wadaɛ*) /pl

ḍarrabiin/ woman who divines by shells.
ضرّابيّة *ḍarrabiyya* /n pl *-aat*/ light quilted coverlet.
ضرّيب *ḍarriib* /n pl *ḍarriiba*/ skilful person (in, e.g., sports).
مضرب *maḍrab* /n pl *maḍaarib*/ **1a** bat. **1b** racquet. **1c** egg-whisk. **1d** fly-swatter. **2** rice-hulling plant.
انضرب *ʔinḍarab* /vi/ passive of *ḍarab*. ‖*ya rabb anḍirib fi-lsaan-i (ʔin kunt^{i} b-akdib)* Lord, may my tongue be cut off if I am lying. - iva *minḍirib*.
اتضرب *ʔitḍarab* or *ʔiḍḍarab* = *ʔinḍarab*. - iva *mitḍirib*.
ضرّب *ḍarrab* /vt/ **1** to mix together, blend. *niḥuṭṭ il-ʔasmant^{i} fooq ir-raml^{i} wi-nḍarrab-hum ɛan-naaṣif* we put the cement on top of the sand and blend them together while dry. **2** to tease (cotton). **3** to quilt. **4a** to calculate. *xud il-ḥisba di ḍarrab-haa-li* do this sum for me. **4b** to consider, weigh (a problem). *ḍarrabt il-ḥikaaya f-muxx-i laqeet-u huwwa lli ḥa-yixsar* I thought over the matter carefully and found that he would be the one to lose. - vn *taḍriib*; ava/pva *miḍarrab*.
اتضرّب *ʔitḍarrab* or *ʔiḍḍarrab* /vi/ pasive of *ḍarrab*. - iva *mitḍarrab*.
ضارب *ḍaarib* **1** /vt/ to compete with. *ʔiṭ-ṭaɛmagi bi-yḍaarib il-ṭurṣagi* the vendor of *ṭaɛmiyya* vies with the pickle-seller. **2** /vi/ to speculate. *ḍaarib fil-burṣa ḍayyaɛ filuus-u* he lost his money speculating in the stock exchange. - vn *miḍarba*; ava *miḍaarib*.
اتضارب *ʔitḍaarib* or *ʔiḍḍaarib* /vi/ **1** passive of *ḍaarib*. **2** to beat one another. *ʔil-ɛiyaal bi-titḍaarib (maɛa baɛḍ)* the kids are beating one another. - ava/iva *mitḍaarib*.
أضرب *ʔaḍrab* /vi/ to go on strike. - vn *ʔiḍraab*; ava *miḍrib, muḍrib*.
إضراب *ʔiḍraab* /n pl *-aat*/ **1** strike. *ɛamalna ʔiḍraab* we held a strike. **2** key lever of a piano.
اضطرب *ʔiḍṭarab*↑ or *ʔiṭṭarab*[1] /vi/ to become confused, become agitated, become turbulent. *miɛdit-i ḍṭarabit* my stomach became upset. - vn *ʔitḍṭiraab*; ava *miḍṭirib, muḍṭarib*.

ض ر ح
ضريح *ḍariiḥ* /n pl *ʔaḍriḥa*/ tomb, sepulchral monument.

ض ر ر[1]
ضرّ *ḍarr (u)* /vt/ to damage, harm, injure. *ʔin-nuur il-ʔaḥmar ma-bi-yḍurr^{i}-ʃ il-film* red light does not damage the film. ‖*ma-yḍurr^{i}-ʃ* that's fine! - vn *ḍarar*; ava *ḍaarir*; pva *maḍruur*.
ضرر *ḍarar* /n pl *ʔaḍraar*/ harm, damage.
ضارّ *ḍaarr* /adj */ harmful.
ضرّة *ḍurra* /n pl *ḍaraayir*/ co-wife in a polygamous marriage.
أضرّ *ʔaḍarr*[1] /el/ more/most harmful.
ضرير *ḍariir* /adj/ blind.
اتضرّ *ʔitḍarr* or *ʔiḍḍarr* /vi/ to be damaged, be harmed, be injured. - iva *mitḍarr*.
انضرّ *ʔinḍarr* = *ʔitḍarr*. - iva *minḍarr*.
اتضرّر *ʔitḍarrar* or *ʔiḍḍarrar* /vi/ to complain of harm done to one. *leeh ma tiḍḍarrar-ʃ^{i} min qaraar iʃ-ʃirka* why don't you complain about the company's decision. - vn *taḍarrur*; ava *mitḍarrar, mutaḍarrir*↑.
أضرّ *ʔaḍarr*[2] = *ḍarr*. - vn *ʔiḍraar*; ava *muḍirr*.
مضرّ *muḍirr* /adj */ harmful.

ض ر ر[2]
ضرورة *ḍaruura*↑ /n pl *-aat*/ need, necessity. *biḍ-ḍaruura* of necessity. *ʔiḍ-ḍaruura laha ʔaḥkaam [prov]* necessity has its own laws. ‖*yiqḍi ḍaruura* to go to the lavatory.
ضروري *ḍaruuri* /adj */ necessary. -/adverbially/ *ḍaruuri ḥa-ywaafiq ɛala l-kalaam da* he'll definitely agree to this.
اضطرّ *ʔiḍṭarr* or *ʔiṭṭarr* /vi/ to be compelled. *ʔiḍṭarrit il-maḥallaat di ʔinnaha txaffaḍ ʔasɛar-ha* these stores were forced to lower their prices. - vn *ʔiḍṭiraar*; ava *miḍṭarr, muḍṭarr*.
اضطراري *ʔiḍṭiraari* or *ʔiṭṭiraari* /adj/ compulsory, forced. *hubuuṭ iḍṭiraari* forced landing. *ḥalaat iḍṭirariyya* emergency cases, emergencies.

ض ر ر[3]
ضرّة *ḍarra* /n pl *-aat*/ udder.

ض ر س
ضرس *ḍirs* (also *dirs*) /n pl *ḍuruus, ʔaḍraas*/ **1** molar. *ḍirs il-ɛaql* wisdom tooth. ‖*bi-xalɛ* (or *bi-qalɛ*) *iḍ-ḍirs* with very great difficulty. - *ʔilli yaakul ɛala ḍirs-u yinfaɛ nafs-u [prov]* self-reliance brings benefit (used as a familiar exhortation to eat). - *min taḥt iḍ-ḍirs* grudgingly. - *ḥuwwa waxid-ha taḥt^{i} ḍirs-u* ≈ he has her under his thumb. **2** piece of cooking salt. ‖*ʔil-malḥ^{i} btaaɛ il-ʔakl^{a} ɛaali ḍirs* the food is a bit on the salty side. **3** cog (of a water-wheel, see Pl.E, 9).
ضرّس *ḍarras* **1** /vt/ to set (s.o.'s) teeth on edge. — /vi/ **2a** to be set on edge (of the teeth). **2b** to have one's teeth set on edge. **3** (also *tarras*) to be thrown out of gear (of cog-wheels). - vn *taḍriis*; ava *miḍarras*.
تضاريس *taḍariis* /pl n/ *[geog]* **1** topography. **2** undulation. *taḍariis il-ʔarḍ* the undulations of the land.

ض ر ط
ضرطة *ḍarṭa* /n pl *-aat, ḍuraṭ*/ a fart. - also *ẓarṭa*.
ضرّط *ḍarraṭ* /vi/ to fart. *tiḍarraṭ fi-baḥri yismaɛuu-k fi-ɣibli* (when you fart in Lower Egypt they hear you in Upper Egypt) ≈ why don't you just shut up (in dismissing a worthless remark). - also *ẓarraṭ*. - ava *miḍarraṭ*.
اتضرّط *ʔitḍarraṭ* or *ʔiḍḍarraṭ* /vi/ (impersonal) passive of *ḍarraṭ*. *baɣa ʔana min illi yiḍḍarraṭ liihum [coarse]* ≈ am I the type to be farted about with? - also *ʔitẓarraṭ*. - vn *taḍriiṭ*; iva *mitḍarraṭ*.

ض ر ع [1]
ضرع *ḍarɛ* /n pl *ḍuruuɛ*/ teat (of an udder).

ض ر ع [2]
ضارع *ḍaaraɛ* /vt/ to be similar to, resemble. - vn *muḍarɛa*; ava *muḍaariɛ*.
مضارع *muḍaariɛ* /n/ *[gram]* imperfect tense.
اتضارع *ʔitḍaaraɛ* or *ʔiḍḍaaraɛ* /vi/ passive of *ḍaaraɛ*. - iva *mitḍaariɛ*.

ض ر ف see د ر ف

ض ع ض ع
ضعضع *ḍaɛḍaɛ* /vt/ to weaken. *ʔil-maraḍ ḍaɛḍaɛ-u* illness weakened him. - vn *ḍaɛḍaɛa*; ava/pva *miḍaɛḍaɛ*.
اتضعضع *ʔitḍaɛḍaɛ* or *ʔiḍḍaɛḍaɛ* /vi/ to be or become weakened. *ʔitḍaɛḍaɛt' min ig-guuɛ* I became weak from hunger. - ava/iva *mitḍaɛḍaɛ*.

ض ع ف [1]
ضعف *ḍiɛif, ḍuɛuf (a)* /vi/ to become weak, become feeble. - vn *ḍaɛf, ḍuɛf*↓; ava *ḍaɛfaan*.
ضعف *ḍaɛaf (i)* /vt/ to weaken. *xilfit il-ɛiyaal ḍaɛafit-ni* giving birth to children wore me out. - vn *ḍaɛafaan*; ava *ḍaaɛif*; pva *maḍɛuuf*.
ضعف *ḍaɛf* /n/ weakness.
ضعفان *ḍaɛfaan* /adj */ ailing, sickly.
ضعيف *ḍaɛiif* /adj pl *ḍuɛaaf, ḍuɛafa*/ weak, feeble. *ḍaɛiif gıddan* Very Poor (university grade). *yiigi ɛaḍ-ḍaɛiif lamma yistaɛgib il-ɣawi [prov]* He punishes the weak that the strong may pay heed. *ʔis-silaaḥ fi-yadd iḍ-ḍaɛıif ɤeer is-silaaḥ fi-yadd il-ɣawi [prov]* a weapon in the hands of a weak man is not the same as it would be in the hands of a strong man.
أضعف *ʔaḍɛaf'* /el/ more/most weak or feeble. ‖ *ʔaḍɛaf il-ʔimaan* the least required or expected, as in *ʔaḍɛaf il-ʔimaan ʔinnak tikallim-u fit-tilifoon* the least you can do is phone him.
أضعف *ʔaḍɛaf²* /vt/ to weaken. - vn *ʔiḍɛaaf*; ava *miḍɛif, muḍɛif*.
استضعف *ʔistaḍɛaf* /vt/ **1** to consider (too) weak. **2** to select for weakness. - vn *ʔistiḍɛaaf*; ava *mistaḍɛaf*; pva *mustaḍɛaf*.

ض ع ف [2]
ضعف *ḍiɛf* /n pl *ʔaḍɛaaf*/ **1** double, twice as much. *ḍiɛf it-takaliif* double the cost. **2** *ʔaḍɛaaf* /pl n/ ... times as much. *talat ʔaḍɛaaf* three times as much.
ضاعف *ḍaaɛif* /vt/ **1** to double. **2** to multiply, increase. - vn *taḍaaɛuf*; ava *muḍaaɛif*.
مضاعف *muḍaaɛaf* /adj/ compound. *kasr' muḍaaɛaf* compound fracture. *fayda muḍaɛfa* compound interest.
مضاعفات *muḍaɛfaat* /pl n/ repercussions, side-effects. *qaraar luu muḍaɛfaat* a decision having repercussions. *muḍaɛfaat id-dawa* the side-effects of the medicine.
اتضاعف *ʔitḍaaɛif* or *ʔiḍḍaaɛıf* /vi/ **1** to double or be doubled. **2** to multiply or be multiplied, increase or be increased. *ɛadad is-sukkaan iḍḍaaɛif kitiir* the population has multiplied many times over. - ava/iva *mitḍaaɛif*.

ض غ ط
ضغط *ḍaɣaṭ (a)* **1** /vt/ to press, compress. *ʔil-ɣaaz lamma b-niḍɣaṭ-u bi-yibrad* gas cools when we compress it. **2** /vi/ to exert pressure. *bi-yiḍɣaṭ bi-ʔibhaam-u* he presses with his thumb. *ḍaɣaṭna ɛalee ɛalafaan yidxul il-imtiḥaan* we put pressure on him to take the exam. ‖ *rubaaṭ ḍaaɣiṭ* tourniquet. - vn *ḍaɣṭ, ḍaɣaṭaan*; ava *ḍaaɣiṭ*; pva *maɣduuṭ*.
ضغط *ḍaɣṭ* /n pl *ḍuɣuuṭ*/ pressure. *ḍaɣṭ il-hawa* air pressure. *ḍaɣṭ id-damm* blood pressure. *ḍuɣuuṭ siyasiyya* political pressures. ‖ *ɣaṭr iḍ-ḍaɣṭ* relief train. - *tamrinaat ḍaɣṭ* press-ups. - *ɛandu ḍ-ḍaɣṭ* he has high blood pressure. - *ʔiḍ-ḍaɣṭ" ɛalee* he is under pressure, as in *ʔiḍ-ḍaɣṭ" ɛalee ʔinnu yiigi* he is under pressure to come.
ضغطه *ḍaɣṭa* /inst n, pl *-aat*/ (a single) exertion of pressure.
اتضغط *ʔitḍaɣaṭ* or *ʔiḍḍaɣaṭ* /vi/ **1** to be pressed, be compressed. **2** (impersonal) passive of *ḍaɣaṭ* 2. *ʔig-garḥ' miʃ laazim yitḍiɣiṭ ɛalee* pressure should not be put on the wound. - iva *mitḍiɣiṭ*.
انضغط *ʔinḍaɣaṭ* = *ʔitḍaɣaṭ*. - iva *minḍiɣiṭ*.

ض غ ن
ضغن *ḍaɣan*↑ *(a)* /vi/ to harbour ill feelings. - vn *ḍiɣn*; ava *ḍaaɣin*.

ضغينة *ḍaɣiina↑* /n pl *ḍaɣaayin, ḍaɣaaʃin*/ hatred, rancour.

ض ف د ع

ضفدع *ḍufdaɛ* /coll n/ frog(s).

¶ *ḍufdaɛ bafari* /pl *ḍafaadiɛ bafariyya*/ frogman.

ضفدعة *ḍufdaɛa* /n pl *ḍafaadiɛ*/ **1** /unit n/ a frog. **2** wooden block on which the *ɛaqraba* of a plough rests (see Pl.D, 16).

ض ف ر [1]

ضفر *ḍafar (u)* /vt/ to braid, plait. *faɛr[i] maḍfuur* plaited hair. - vn *ḍafr, ḍafaraan*; ava *ḍaafir*; pva *maḍfuur*.

ضفيرة *ḍifiira* /n pl *ḍafaayir*/ **1** braid or plait of hair. **2** collection of wires or leads (such as those leading from a car's distributor), wiring arrangement.

ضفّر *ḍaffar[1]* /vt/ **1** to braid, intertwine. ‖ *kaḫk[i] mḍaffar* a kind of braided cake. **2** to splice. - vn *taḍfiir*; ava/pva *miḍaffar*.

اتضفّر *ʃitḍaffar[1]* or *ʃiḍḍaffar[1]* /vi/ **1** to be braided, be intertwined. **2** to be spliced. - iva *mitḍaffar*.

ض ف ر [2]

ضفر، ظفر *ḍufr, ḍifr* /n pl *ḍawaafir*/ **1** finger-nail, toe-nail. *ʃis-sagaayir bi-tṣaffar is-sinaan wiḍ-ḍawaafir* cigarettes yellow the teeth and the nails. ‖ *ḍufr-u b-raqabit-ha* ≈ he's worth ten of her. - *da yitmanna ḍufr[i] min ḍawafir-ha* (1) he obeys her slightest whim. (2) he would very much like to marry her. - *ʃiḍ-ḍufr[i] ma-yiṭlaɛ-ʃ[i] min il-laḥm [prov]* (the nail does not part from the flesh) one always sticks to one's own. **2** claw-shaped motif in tent appliqée work (see Pl.H, 7).

ضفرة، ظفرة *ḍafra* /n pl *-aat*/ gouge.

ضفر، ظفر *ḍaffar[2]* /vt/ to mark (a pack of cards). - vn *taḍfiir*; ava/pva *miḍaffar*.

اتضفّر *ʃitḍaffar[2]* or *ʃiḍḍaffar[2]* /vi/ to be marked (of a pack of cards). - iva *mitḍaffar*.

(ض ف ف)

ضفّة *ḍaffa[1]* /n pl *ḍifaaf*/ bank (of a river etc.).

ضفّة *ḍaffa[2]* /n pl *-aat, ḍufaf*/ group (usually as part of a procession). *faatu ɛaleena ḍaffa wara ḍaffa* they passed by us group after group. - also *ṭaffa*.

ضفّة *ḍaffa[3]* /n/ double number (e.g., in dice or dominoes). - also *ṭaffa*.

ض ل ع

ضلع *ḍalaɛ (i)* /vt/ to undermine (particularly financially). *baqa gneeh yiḍliɛ-ak* do you want us to believe that one pound can ruin you? - vn *ḍalaɛaan*; ava *ḍaaliɛ*; pva *maḍluuɛ*.

ضلع *ḍilɛ* /n pl *ḍuluuɛ, ʃaḍlaaɛ, ḍulúɛa*/ **1** rib. ‖ *lu ḍilɛ[i] fil-mawḍuuɛ* he's involved in the matter. *ʃiksar lil-ɛayyil ḍilɛ[i] yiṭlaɛ-lu tneen [prov]* (break a child's rib and two will appear) ≈ spare the rod and spoil the child. **2** small sickle. **3** side (of a triangle, polygon etc.).

ضليع *ḍaliiɛ* /adj/ expert, well-informed. *ḍaliiɛ fil-iqtiṣaad* an expert in economics.

اتضلع *ʃitḍalaɛ* or *ʃiḍḍalaɛ* /vi/ to be undermined. - iva *mitḍiliɛ*.

انضلع *ʃinḍalaɛ* = *ʃitḍalaɛ*. - iva *minḍiliɛ*.

ضلّع *ḍallaɛ* /vt/ to corrugate. ‖ *qaṭiifa mḍallaɛa* corduroy. - vn *taḍliiɛ*; ava/pva *miḍallaɛ*.

اتضلّع *ʃitḍallaɛ* or *ʃiḍḍallaɛ* /vi/ **1** to be or become corrugated. **2** to gain great knowledge, become well-informed. - ava/iva *mitḍallaɛ*.

ض ل ف

ضلفة *ḍalfa* /n pl *-aat, ḍulaf*/ leaf (of a door, window etc.). - also *darfa*.

ض ل ل [1]

ضلّ *ḍall (i)* **1** /vt/ to lose (one's way). *ḍalleet ṭariiq-i fiḍ-ḍalma* I lost my way in the dark. **2** /vi/ to sin, err. - vn *ḍalaal*; ava *ḍaalil, ḍaall*.

ضلال *ḍalaal* /n/ misguidedness.

ضلالي *ḍalaali* /n pl *-yya*/ cheat.

أضلّ *ʔaḍall* /el/ more/most erroneous, falser/falsest. *ʃasxam wi-ʔaḍall[i] sabiil [prov]* far worse, as in *huwwa kaddaab wi-ʃaxuu ʃasxam wi-ʔaḍall[i] sabiil* he is a liar and his brother is even worse.

ضلّل *ḍallil[1]* /vt/ to mislead, lead (s.o.) astray. *baqaa-lik talat siniin bi-tḍallilii-ni* you've been leading me up the garden path for three years now! - vn *taḍliil*; ava/pva *miḍallil*.

اتضلّل *ʃitḍallil[1]* or *ʃiḍḍallil[1]* /vi/ to be misled, be led astray. - iva *mitḍallil*.

ض ل ل [2]

ظلّ، ضلّ *ḍill* /n/ shade, shadow. *ma-fii-ʃ wala ḥittit ḍill[i] ɣeer ḍill illi maʃyiin* there's not a speck of shade except for the shadows of the passers-by. ‖ *ɣurzit iḍ-ḍill [needlew]* shadow-stitch. - *xayaal iḍ-ḍill* shadow play. - *ḍill[i] raagil wala ḍill il-ḥeeṭ [prov]* ≈ better to marry than to live alone.

ظلّ *ẓill* /n pl *ẓilaal*/ **1** *[geom]* tangent. **2↑** (also *ḍill*) shadow. ‖ *xafiif iẓ-ẓill* he has a cheerful disposition.

ضلّيلة *ḍulleela* /n pl *-aat*/ awning.

مظلّة *miẓalla, maẓalla* /n pl *-aat*/ **1** any device (such as a canopy) providing cover or shadow. *maẓalla gawwiyya↑* air cover (operation). **2** parachute.

ظلّل، ضلّل *ḍallil*[2] /vi/ to provide shade. *ɛayziin ʃamsiyya tḍallil ɛaleena* we want a parasol to give us shade. - vn *taḍliil*; ava *miḍallil*.

مظلّل *muẓallal: ʃil-muẓallal bil-ɤamaama* the One Shaded by the Cloud (epithet of the Prophet Muhammad).

اتظلّل *ʃitḍallil*[2] or *ʃiḍḍallil*[2] /vi/ (impersonal) passive of *ḍallil*[2]. *ʃil-ḳabr' ma-yguz-ʃ' yitḍallil ɛalee* shade should not be cast over tombs. - iva *mitḍallil*.

استظلّ *ʃistaẓall↑* /vi/ to seek shade. - ava *mistiẓill*.

ض ل م [1]

ظلمة، ضلمة *ḍalma* /n/ darkness. *ḳaaɛid fiḍ-ḍalma* sitting in the dark. - /adjectivally/ *ʃid-dinya ḍalma* it's dark.

ظلم *ḍilim* /adj/ **1** dark, dimly-lit. *makaan ḍilim* a gloomy place. ‖ *wiff-u ḍilim* he has an unpleasant face (or expression). **2** dull, stupid. *muxx-u ḍilim* he's dimwitted.

أظلم *ʃaḍlam* /el/ **1** more/most dark. **2** more/most stupid or dull.

ظلام، ضلام *ḍalaam* /n/ darkness.

ظلّم *ḍallim, ḍallam* **1** /vt/ to darken, make dark. *ḍallimnaa-ha ɛalee* we darkened his world for him. **2** /vi/ to become dark. *ʃid-dinya ḍallimit* it became dark. ‖ *ʃid-dinya ḍallimit fi-wiff-i* my world turned to ashes. - vn *taḍliim*; ava/pva *miḍallim, miḍallam*.

اتظلّم *ʃitḍallim* or *ʃiḍḍallim* /vi/ to be made dark. - iva *mitḍallim*.

ض ل م [2]

ظلمة *ḍulma* <T *dolma*> /n/ stuffed vegetables, specifically without meat.

ض م ا ن see د م ا ن: *ḍamaan[1], ḍamangi*

ض م د

ضمادة *ḍumaada, ḍamaada* /n pl *-aat, -aat*/ bandage, dressing.

ضمّد *ḍammad* /vt/ to dress, bandage (wounds). - vn *taḍmiid*; ava/pva *miḍammad*.

اتضمّد *ʃitḍammad* or *ʃiḍḍammad* /vi/ to be dressed, be bandaged (of wounds). - iva *mitḍammad*.

ض م ر [1]

ضمر *ḍamar[1]* or *ḍumur (u)* /vi/ to shrivel. *ʃil-bihiima ḍamarit* the animal became emaciated. ‖ *ʃil-mara ḍamarit* the woman became too old for sex. - vn *ḍamr, ḍumuur*; ava *ḍaamir, ḍamraan*.

ضمّر *ḍammar* /vt/ to cause to dry up. - vn *taḍmiir*; ava/pva *miḍammar*.

اتضمّر *ʃitḍammar* or *ʃiḍḍammar* /vi/ passive of *ḍammar*. - iva *mitḍammar*.

ض م ر [2]

ضمر *ḍamar[2] (u)* /vt/ to harbour or intend (evil). *bi-yuḍmur-lak iʃ-ʃarr* he harbours evil intentions towards you. ‖ *waʃwiʃ id-dakar w-uḍmur* whisper to the large shell and ponder (instruction given in shell divination). - vn *ḍamr*; ava *ḍaamir*; pva *maḍmuur*.

ضمير *ḍamiir* /n pl *ḍamaayir*/ **1** conscience. **2** *[gram]* pronoun.

اتضمر *ʃitḍamar* or *ʃiḍḍamar* /vi/ passive of *ḍamar[2]*. - iva *mitḍimir*.

أضمر *ʃaḍmar = ḍamar[2]*. - vn *ʃiḍmaar*; ava *miḍmir, muḍmir*; pva *muḍmar*.

ض م ر [3]

مضمار *miḍmaar↑* /n pl *maḍamiir*/ race course. ‖ *ma-ɧadd'-ʃ yixlib-u ʃ-ʃayy miḍmaar* nobody can defeat him in any field.

ض م م

ضمّ *ḍamm (u)* /vt/ **1** to join, unite. *ḍummi riglee-ki ʃ-baɛaḍ* keep your legs together. *ḍammit ibn-a-ha l-sidr-a-ha* she embraced her son. **2** to comprise, contain. *ʃid-daftar bi-yḍumm' kull' ʃasmaaʃ il-muwaẓẓafiin* the ledger contains all the employees' names. **3** to harvest. *baɛḍ' ma yinʃaf il-barsiim niḍumm-u bil-manaagil* after the clover dries out, we harvest it with sickles. - vn *ḍamm, ḍamamaan*; ava *ḍaamim*; pva *maḍmuum*.

ضمّة *ḍamma* /n pl *-aat*/ **1** instance noun of *ḍamm*. **2** *[gram]* vowel sign for short *u* (in Arabic writing).

انضمّ *ʃinḍamm* /vi/ **1** to join, join oneself. *ʃinḍammeet lin-niqaaba* I joined the union. **2** to be joined, be united. **3** to be comprised, be contained. **4** to be harvested. - vn *ʃinḍimaam*; ava/iva *minḍamm*.

اتضمّ *ʃitḍamm* or *ʃiḍḍamm = ʃinḍamm*. - ava/iva *mitḍamm*.

ض م ن [1]

ضمن *ḍaman (a)* /vt/ **1** to guarantee, ensure. *ɛalaʃaan niḍman maɧaṣiil wafra* so that we may ensure abundant crops. **2** to act as guarantor for. *ʃaṣɧaab-i ɧa-yiḍmanuu-ni* my friends will act as my guarantors. *mivassil wi-ḍaamin ganna* (undertaker and guarantor of heaven) one who can do the impossible. - vn *ḍamaan*; ava *ḍaamin*; pva *maḍmuun*.

ضمان *ḍamaan*[2] /n pl *-aat*/ guarantee, surety. *ḍamaan ʃaxṣi* personal guarantee. *ḍamaan il-ɤeer* second-person guarantee.
¶ *ḍamaanan li-* as a guarantee of.
ضمانة *ḍamaana* /n pl *-aat*/ **1** surety. *ɛala ḍamant-i* on my guarantee, I guarantee it. **2** guarantee. *ʃis-saaɛa gaaya wi-mɛaaha ḍ-ḍamaana* the watch came from the factory with a guarantee (certificate).
ضامن *ḍaamin* /n */ guarantor, warrantor. *ḍaamin mitḍaamin [leg]* co-signatory.
أضمن *ʃaḍman* /el/ safer/safest, surer/surest.
اتضمن *ʃitḍaman* or *ʃiḍḍaman* /vi/ to be guaranteed. - iva *mitḍimin*.
اتضامن *ʃitḍaamin* or *ʃiḍḍaamin* /vi/ **1** to unite, form a group, stand together for a common purpose. **2** to accept joint liability. *ḍaamin mitḍaamin [leg]* co-signatory. - iva *mitḍaamin*.
تضامن *taḍaaman↑* = *ʃitḍaamin*. - vn *taḍaamun*; ava *mutaḍaamin*.
تضامن *taḍaamun↑* /n/ **1** *[comm]* joint liability. **2** *[pol]* solidarity. *ʃit-taḍaamun il-ʃifriiqi l-ʃasyawi* Afro-Asian solidarity.

ض م ن[2]
ضمن *ḍimn* or, more commonly, *min ḍimn* /prep/ among, included in, along with. *fii min ḍimn il-ɛidda btaɛit-hum ʃakuuf* included in their equipment is a hammer. *laazim yikuun miqaddim ḍimn il-ʃawraaq bitaɛt-u fihaadit il-milaad* he must present a birth certificate among his papers.
ضمني *ḍimni↑* /adj/ implicit.
مضمون *maḍmuun↑* /n/ **1** content. **2** purport, meaning.
ضمّن *ḍamman↑* /vt/ to include in. *ḍamman taqriir-u kull iqtiraḥaat-u* he put all his suggestions into his report. - vn *taḍmiin*; ava/pva *miḍamman*.
اتضمّن *ʃitḍamman* or *ʃiḍḍamman* **1** /vi/ to contain. **2** to be made to include. **3** to be included. - ava/iva *mitḍamman*.

ض م ن[3]
دومينو *ḍumana, ḍuminu* <perh It> /n/ **1** /coll/ domino(es). **2** set of dominoes. **3** game of dominoes.
ضمّن *ḍammin* /vi/ to play the winning piece in a game of dominoes. - vn *taḍmiin*; ava *miḍammin*.
اتضمّن *ʃitḍammin* or *ʃiḍḍammin* /vi/ to be won (of a game of dominoes). *ma-yitḍammin-f*[i] *w-ɛandi kull il-ɋiṭaɛ di* the game can't possibly be over while I still have all these pieces! - iva *mitḍammin*.

ض م ن[4] see د م ا ن: *ḍamaan*[1], *ḍamangi*

ض ن ا see ض ن ى: *ḍana*

ض ن ك
ضنك *ḍank* /n/ poverty, hardship.

ض ن ن
ضنّ *ḍann (i)* /vi/ to be stingy. *ʃin-niil ḍann*[a] *ɛaleehum* the Nile withheld its bounty from them. - vn *ḍann*; ava *ḍaanin*; pva *maḍnuun*.
ضنين *ḍaniin* /adj/ small, scanty. - /adverbially/ *ḍaniin (lamma) nifuuf-u* we seldom see him.
اتضنّ *ʃitḍann* or *ʃiḍḍann* /vi/ (impersonal) passive of *ḍann*. *ʃid-dawa ma-yitḍann*[i]*-f bii* medicine is not to be denied to anyone. - iva *mitḍann*.
انضنّ *ʃinḍann* = *ʃitḍann*. - iva *minḍann*.

ض ن ى
ضنى *ḍana*[1] *(i)* /vt/ to wear out, exhaust (particularly of love or passion). - vn *ḍana*; ava *ḍaani*; pva *maḍni*.
ضنى *ḍana*[2] /n/ **1** tormenting love. **2** offspring. *ʃiḍ-ḍana ɤaali* people's children are precious to them. *ya ḍanaa-ya [women]* ≈ my dear! *ya ḍanaa-ya ɛala ʃabaab-ak* you poor child to die so young!
انضنى *ʃinḍana* /vi/ to be or become worn out, be or become exhausted. - ava/iva *minḍini*.
أضنى *ʃaḍna↑* = *ḍana*[1]. - ava *muḍni*.
مضنى *muḍni↑* /adj/ exhausting. *ɛamal muḍni* exhausting work.

ض ه
ضه *ḍah* /fem n, pl *-aat*/ fifteenth letter of the Arabic alphabet. - also *ḍaad*.

ض ه د
اضطهد *ʃiḍṭahad↑* or *ʃiṭṭahad* /vt/ to victimize, persecute. - /the literary passive occurs/ *humma b-yuḍṭahadu kida leeh* why are they persecuted so? - vn *ʃiḍṭihaad*; ava *miḍṭahid*; pva *muḍṭahad*.

ض ه ر
ضهر، ظهر *ḍahr* /n pl *ḍuhuur, ḍuhúra*/ **1a** back (of a human or animal). *sibaaḥit iḍ-ḍahr* backstroke (in swimming). *faḍaḥuu-ni min wara ḍahr-i* they spoke ill of me behind my back. ‖ *ʃiṭ-ṭifl*[i] *nizil bi-ḍahr-u* the child was born in a breech position. - *lu ḍahr* he has backing, he has support. *ʃilli lu ḍahr*[i] *ma-yinḍirib-f*[i] *ɛala baṭn-u [prov]* one who is strongly backed will not be struck in the belly. - *min ḍahr* descended from, as in *ʃibn-i min ḍahr-i* my own son, the son of my loins, *raagil min ḍahr*[i] *raagil* a real man. **1b** back, reverse. *ḍahr il-kaff* the

back of the hand. *ɛala ḍahr il-baab* on the back of the door. *fi-ḍahr il-mabna* at the back of the building. ‖*ḥ-aʃimm[a] ɛala ḍahr' ʃiid-i baqa* (shall I smell (it) on the back of my hand, then?) ≈ do you expect the birds to tell me? — /no pl/ **2** surface. *ɛala ḍahr il-mayya* on the surface of the water. *ɛala ḍahr il-markib* on board ship. ‖*da-lli ɣiɛt' bii min ḍahr id-dinya* ≈ is this all I have to show from the world? **3** menses. *ɛaleeha ḍahr-a-ha* she is menstruating.

ظهر *ẓahr: ɛan ẓahr' qalbˆ* (memorized) by heart.

ظهريّة، ضهريّة *ḍahriyya* /n/ **1** back part, back piece. **2** working edge (of a grindstone).

ظهر، ضهر *ḍuhr* /n/ **1** period extending from approximately midday until the middle of the afternoon. *ʃarbaɛa baɛd iḍ-ḍuhr* four o'clock in the afternoon. *warret-lu nuguum iḍ-ḍuhr* I made him see stars, I gave him a hard time. -/adverbially/ *ʃin-nahar-da ḍ-ḍuhr* today at noon. *ʃis-saaɛa tneen iḍ-ḍuhr* two o'clock in the afternoon. **2** *[Isl]* midday prayer.

ظهريّة، ضهريّة *ḍuhriyya* /n/ period around midday. *taɛaala fiḍ-ḍuhriyya* come about noon. -/adverbially/ *xaragit iḍ-ḍuhriyya w-lissa ma-rigɛit-ʃ* she went out around noon and hasn't come back yet.

ظهارة، ضهارة *ḍihaara* /n/ **1** top coat (of paint). **2** back part, back piece.

ظهير *ẓahiir* /n/ *[soccer]* back.

ظهّر، ضهّر *ḍahhar* /vt/ to paint with a finishing coat. *ʃin-naqqaaʃ ḍahhar ḥeṭaan il-beet* the painter applied a finishing coat to the walls of the house. -vn *taḍhiir*; ava/pva *miḍahhar*.

اتضهّر *ʃitḍahhar* or *ʃiḍḍahhar* /vi/ to be painted with a finishing coat. -iva *mitḍahhar*.

ظهّر *ẓahhar[1]* /vt/ to endorse (a cheque by signing on the back). -vn *taẓhiir*; ava/pva *miẓahhar*.

اتظهّر *ʃitẓahhar[1]* or *ʃiẓẓahhar[1]* /vi/ to be endorsed (of a cheque, by being signed on the back). -iva *mitẓahhar*.

ض ه ى

ضاهى *ḍaaha* /vt/ **1** to check (signatures, finger-prints etc.) for verification. **2** to match, correspond with. *ʃil-loneen yiḍaahu baɛḍ* the two colours match. -vn *miḍahiyya, muḍahaah*; ava/pva *miḍaahi*.

اتضاهى *ʃitḍaaha* or *ʃiḍḍaaha* /vi/ **1** to be checked for verification. **2** to be matched. -iva *mitḍaahi*.

ض و ء see ض و ى: *ḍooʃ, ḍawʃi, ʃaḍaaʃ*

ض و ض

ضوضاء *ḍawḍaaʃ* /n/ din, noise, clatter.

ض و ى

ضوى *ḍawa (ı)* /vi/ to gleam, shine, give off light. -vn *ḍaww, ḍayy*; ava *ḍaawı*.

ضىّ *ḍayy* /n/ light. *ya ḍayy' ɛeen-i* affectionate form of address, particularly by a mother to her son.

ضوء *ḍooʃˆ* /n pl *ʃaḍwaaʃ*/ light. *ḍooʃ ṭabiiɛı* natural light. *fi-ʃawwıl ḍooʃ* at first light. *ɛala ḍooʃ kalaam-ak* in the light of what you say. *ʃaḍwaaʃ il-madiına* the city lights. ‖*ʃiṣ-ṣoot wiḍ-ḍooʃ* Son et Lumière.

ضوئى *ḍawʃi* /adj/ pertaining to light. *sana ḍawʃiyya* light year.

أضاء *ʃaḍaaʃˆ* /vt/ to light, illuminate. *quyuud il-ʃiḍaaʃa* lighting restrictions. -vn *ʃiḍaaʃa*; ava *muḍiiʃ*; pva *muḍaaʃ*.

ض ى ع

ضاع *ḍaaɛ (i)* /vi/ to get lost, become lost. *ḥumaar-ı ḍaayiɛ* my donkey is lost. *ʃana ḥaasis biḍ-ḍayaaɛ* I feel lost. *ʃil-fuṛṣa ḍaaɛit ɛalayya* the opportunity was lost to me. ‖*ḥa-yḍiiɛ da f-da* one thing cancels the other out. *-ṣaayiɛ wi-ḍaayiɛ* ne'er-do-well. *-sabaɛ ṣanaayiɛ wil-baxt' ḍaayiɛ [prov]* plenty of skill, but no luck! -vn *ḍayaaɛˆ, ḍayaɛaan*; ava *ḍaayiɛ*.

ضايعة *ḍayɛa* /n/ name given to an object (such as a fruit stone) used in a variety of the children's game called *ṭurra*.

ضيّع *ḍayyaɛ* /vt/ **1** to lose, cause to be lost. *ḍayyaɛ-li fluus kitiir* he lost me a lot of money. **2** to dissipate, squander. *ḍayyaɛt' ʃamwaal-ak ɛala l-kukayiin* you have squandered your money on cocaine. *ʃaṣḥaab-u ḍayyaɛuu* his friends made him go to waste. -vn *taḍyiiɛ*; ava/pva *miḍayyaɛ*.

اتضيّع *ʃitḍayyaɛ* or *ʃiḍḍayyaɛ* /vi/ **1** to be lost. **2** to be squandered, be wasted. -iva *mitḍayyaɛ*.

ض ى ف [1]

ضاف *ḍaaf (i)* /vt/ to add. *ʃil-waaḥid yiḍiif ɋirf' kida ɋirf' kida* one adds a piastre here, and a piastre there. -/the literary passive imperfect form occurs in elevated speech/ *ʃil-mawaadd illi b-tuḍaaf ɛalee* the substances which are added to it. -vn *ḍayafaan*; ava *ḍaayif*.

اتضاف *ʃitḍaaf* or *ʃiḍḍaaf* /vi/ to be added. -iva *mitḍaaf*.

انضاف *ʃinḍaaf* = *ʃitḍaaf*. -iva *minḍaaf*.

أضاف *ʃaḍaafˆ* = *ḍaaf*. -vn *ʃiḍaafa*; ava *miḍiif, muḍiifˆ*; pva *muḍaaf*.

إضافة *ʃiḍaafa* **1** /vn/ ‖*bil-ʃiḍaafa ʃila zaalikˆ* in addition to that. — /n pl *-aat*/ **2** addition. *ʃil-xuṣuum wil-ʃiḍafaat* deductions and additions. **3** additive. **4** *[gram]* genitive construction.

إضافي *ʔiḍaafi* /adj */ additional, extra. *muḥaḍraat ʔiḍafiyya [acad]* (1) extra-curricular lectures. (2) lectures over and above a faculty member's workload.

² ض ى ف

ضيف *ḍeef* /n pl *ḍiyuuf, ḍuyuuf*/ guest. *ʔooḍit ḍiyuuf* guest parlour. *ʔiḍ-ḍeef il-magnuun yaakul wi-yʿuum [prov]* the crazy (i.e. ill-mannered) guest eats and leaves (straight away).

ضيافة *ḍiyaafa, ḍiyaafa* /n/ hospitality. *baatu f-ḍiyaafit ibn-i* they spent the night as guests of my son.

مضيفة *maḍyafa, maḍyafa* /n pl *maḍaayif*/ **1** guest-house. **2** *[rur]* large hall used by an extended family for gatherings and entertaining.

مضيف *muḍiif* /n */ steward.

مضيفة *muḍiifa, muḍiifa* /n pl *-aat*/ stewardess, hostess. *muḍiifa gawwiyya* air hostess.

ضيّف *ḍayyif* /vt/ to entertain (s.o.) as a guest. -vn *taḍyiif*; ava *miḍayyif*.

اتضيّف *ʔitḍayyif* or *ʔiḍḍayyif* /vi/ to be entertained as a guest. -iva *mitḍayyif*.

ضايف *ḍaayif* /vt/ to entertain (s.o.) as a guest. -vn *miḍayfa*; ava *miḍaayif*.

اتضايف *ʔitḍaayif* or *ʔiḍḍaayif* /vi/ to be entertained as a guest. -iva *mitḍaayif*.

استضاف *ʔistaḍaaf* /vt/ to have as a guest. *ʔig-gamʕa mumkin tistiḍiif-ak ɬuul il-mudda* the university may have you as a guest for the whole period. -vn *ʔistiḍaafa*; ava *mistiḍiif*.

ض ى ق see د ى ق

¹ ض ى م

ضام *ḍaam (i)* to treat unfairly. *ʔin ʃa-lla z-zaman ma-yḍiim-ak [beggars, women in trad soc]* may you never suffer any misfortune! -vn *ḍayamaan*; ava *ḍaayim*.

انضام *ʔinḍaam* /vi/ to be treated unfairly. -iva *minḍaam*.

² ض ى م see ض ا م : *ḍaama*

ط

ط ا

طا *ṭaa* /fem n/ sixteenth letter of the Arabic alphabet. - also *ṭaaʕ, ṭah*.

ط ا ء

طاء *ṭaaʕˀ* /fem n, pl *-aat*/ sixteenth letter of the Arabic alphabet. - also *ṭaa, ṭah*.

ط ا ب

طاب *ṭaab*[1] /n/ game for two players with stone counters and four strips of palm branch, each strip having one green and one white side; the strips are thrown against a vertical surface and the various combinations of green and white govern the movement of the stones on a grid drawn in the dust.

طابة *ṭaaba* /n pl *-aat*/ **1** splint. **2a** one of the strips of palm used in the game of *ṭaab* (q.v.). **2b** winning throw in the game of *ṭaab. ya ṭaaba ya ʃitneen ɛuur [prov]* (either a winning throw or one that affects the outcome neither way) ≈ you may win and you can't lose. - *tiigi maɛa l-ɛumy' ṭabaat [prov]* (the blind may make winning throws) ≈ lucky flukes may occur.

ط ا خ see also ط خ خ

طاخ *ṭaax* onomatopoeia for the sound of a hit, blow, or shot ≈ bang! whack! wham! ‖ *nizil fi(i) ṭaax* to beat the daylights out of (s.o.).

ط ا ر

طار *ṭaar*[1] /n pl *-aat*/ large tambourine without jingles. ‖ *la yinfaɛ ṭabla wala ṭaar* ≈ of no use whatsoever. - *magnuuna w-massikuu-ha ṭaar [prov]* (she's mad and they put a tambourine in her hand) ≈ they made a bad situation worse.

طارة *ṭaara* /n pl *-aat*/ **1** hoop, wheel. *ʃiṭ-ṭaara bi-tdawwar is-sikkiina* the flywheel turns the blade. ‖ *ṭaara ɛaruusi* large tambourine without cymbals, *ʒaar* word denoting the *daff*. **2** ring-shaped support for a pot (used on the burner of a cooking stove). **3** outer edge, rim.

ط ا ز

طازه *ṭaaza* <P *tâza*> /adj invar/ fresh. *samak ṭaaza* fresh fish. *ʃaxbaar ṭaaza* fresh news. - also *taaza*.

ط ا س

طاسة *ṭaasa* (also *ṭaaṣa*) /n pl *-aat*/ **1** shallow metal bowl. ‖ *ṭaasit iṭ-ṭarba* or *ṭaasit il-xaḍḍa* shallow metal bowl used in folk medicine; persons subjected to a fright drink specially treated water from it for seven days as a protection against sterility. **2** frying-pan. **3** hub-cap. **4** top of the skull, poll. ‖ *ɛammar iṭ-ṭaasa* to get high, get loaded. **5** helmet. **6** saucer-shaped projection on the stem of a water-pipe (see Pl.I, 3).

ط ا ص see ط ا س : *ṭaaṣa*

ط ا ط see ط ط ى : *ṭaaṭa*

ط ا ق see [1] ط و ق and [2] ط و ق : *ṭaaq, ṭaaqa, ṭaaqa, ṭaqiyya*

ط ا ه ا

طه *ṭaaha* /prop n/ male name, sometimes used in reference to the Prophet Muhammad.

ط ا ى م

طايم *ṭaayim* (also *hafṭaayim*) <Engl *time*> /n/ *[sport]* half (in a match). *ʃiṭ-ṭaayim il-ʃawwalaani* the first half.

ط ء ط see ط ط ى : *ṭaʃṭaʃ*

ط ب [1] see also ط ى ب [1]

طب *ṭab* /interj; contraction of *ṭayyib* (q.v.)/ all right (then), very well (then), o.k. (then). *miʃ ḥa-tiggawwizii - ṭab ya sitt-i ḥa-nfuf-lik ʏeer-u* you won't marry him? very well, young lady, we'll find you someone else. *ṭab - niɛmil ʃeeh dilwaqti* O.K. - what do we do now?

ط ب [2] see ط ب ج : *ṭubgi*

ط ب ا ر

طوبار *ṭubaar* /n/ kind of grey mullet (Mugil capito).

ط ب ا ن

طبان *ṭabaan* <T *taban*> /n/ collective noun of *ṭabaana* (q.v.).

طبانة *ṭabaana* /unit n, pl *-aat*/ **1** any of a number of devices serving the purpose of containment (e.g., retaining cap for watch jewels, kerbstone, top of a wall, rear end of a rifle butt). **2** sheet of rolled-out dough.

ط ب ب [1]

طبّ *ṭibb* /n/ medicine, medical science. *ʃiṭ-ṭibb il-biṭari* veterinary medicine. *kulliyyit iṭ-ṭibb* the Faculty of Medicine, the School of Medicine. ‖ *ṭibb ir-rukka* quack medicine.

طبّى *ṭibbi* /adj */ medical. *ʃihaada ṭibbiya* medical certificate. *ʃanṭit lawaazim ṭibbiyya* first aid kit. ‖ *quṭn[i] ṭibbi* cotton wool, absorbent cotton. - *ḥaʃiiʃ ṭibbi* high-grade hashish.

¶ *ṭibbiyyan* /adv/ medically.

طبيب *ṭabiib* /n pl *ʃaṭibba*/ doctor, physician. *ṭabiib ʃasnaan* dentist.

طبّب *ṭabbib[1]* /vt/ to nurse (a sick person). - vn *taṭbiib*; ava/pva *miṭabbib*.

اتطبّب *ʃiṭṭabbib[1]* or *ʃiṭṭabbib[1]* /vi/ to be nursed (of a sick person). - iva *miṭṭabbib*.

ط ب ب [2]

طبّ *ṭabb[1] (u)* /vi/ **1** to fall down, drop. *saaɛit is-saṭḥ[i] ma ṭabb[a] ɛaleehum* when the roof fell in on them. *ʃil-muṣiiba ṭabbit ɛala dmaaʏ-u* disaster befell him. *ɋalb-i ṭabb* my heart sank. ‖ *ṭabbeet fi-ʃiid-u* I fell into his clutches. - *ṭabb[i] fik-kalaam* to commit oneself unwittingly. **2** to arrive unexpectedly, pay a surprise visit. *ṭabb[a] ɛaleena zuwwaar wi-ḥna xargiin* visitors arrived suddenly when we were on the point of going out. *ʃil-mufattiʃ misiir-u yṭubb[a] ɛandukum* one day the inspector will come to your place by surprise. *ṭabb[a] ɛalayya min ʏeer maɛaad* he dropped in unexpectedly without an appointment. ‖ *(wi-)hubb[i] ṭubb* see *hubb*. **3** to tumble, fall over. *ṭabbeet fil-imtiḥaan* I flunked in the exam. ‖ *ʏiriq li-wdaan-u f-ḥubb-a-ha w-ṭabb* he fell head over heels in love with her and was completely hooked. - *ma-yṭubb[i] ʃilla f-ʃaaṭir* ≈ it happens only to the best (said to give consolation in misfortune). **4** to tip freely (of scales). *xalli l-mizaan yiṭubb* let the scales tip freely, i.e. give a fair weight! ‖ *ṭabb[i] zayy ir-raṭl* he fell for it like a fool. **5** to rise, become very strong (of wind on the Nile). *ʃil-hawa ṭaabib* the wind is blowing hard. — /vt/ **6** to allow (scales) to tip freely. *ṭubb il-mizaan* let the scales tip freely, i.e. give a fair weight! - vn *ṭabb, ṭababaan*; ava *ṭaabib*; pva *maṭbuub*.

طبّ *ṭabb[2]* /n/ strong wind, gale (in the jargon of the Nile boatmen).

طبّ *ṭubb: (wi-)hubb[i] ṭubb* see *hubb*.

مطبّ *maṭabb* /n pl *-aat*/ **1** hole caused by deterioration of the road surface, pothole. ‖ *maṭabb[i] hawaaʃi* air-pocket. **2** pitfall, catch. *ʃis-suʃaal da maṭabb[i] gaamid* that's a very tricky question.

اتطبّ *ʃiṭṭabb* or *ʃiṭṭabb* /vi/ (impersonal) passive of *ṭabb[1]* 1. ‖ *ma-yiṭṭabb[i]-ʃ ɛalayya ḥiila* I don't fall for any tricks - iva *miṭṭabb*.

انطبّ *ʃinṭabb* = *ʃiṭṭabb*. - iva *minṭabb*.

طبّب *ṭabbib[2]* /vt/ **1** = *ṭabb[1]* 4. **2** to cause to fall. **3** to cause to arrive unexpectedly. *ʃeeh illi ṭabbib-u ɛaleena fis-saɛaa-di* what brought him to our place at this hour? - vn *taṭbiib*; ava/pva *miṭabbib*.

اتطبّب *ʃiṭṭabbib[2]* or *ʃiṭṭabbib[2]* /vi/ passive of *ṭabbib*. - iva *miṭṭabbib*.

ط ب ب [3]

طبّة *ṭabba* <prob It *tappo*> /n pl *-aat*/ **1** (sink) stopper, (drain) plug. *ṭabbit markib* boat bung. **2** screw-cap (on the side or underside of a pipe or tank).

ط ب ج

طوبجى *ṭubgi* <T *topçu*> /n pl *-yya*/ *[obsol]* artilleryman.

ط ب خ

طبخ *ṭabax (u)* /vt/ **1** to cook (food). *ḥa-tuṭbuxu ʃeeh in-nahar-da* what are you going to cook today? *ʃilli ylaaɋi lli yuṭbux-lu leeh yiḥraɋ ṣawabɛ-u [prov]* (why should one who finds someone to cook for him burn his fingers?) don't do your own dirty work if you can find someone to do it for you. **2** to prepare (a mixture, a substance) by heating. *bi-nuṭbux in-niʃa* we cook up the starch. **3** to cook up, hatch (a plot and the like). *ṭabaxu l-mawḍuuɛ wi-naffizit-u liihum* they hatched up the

plan and she carried it out for them. *miin ṭabax iṭ-ṭabxa* who engineered the plot? — /vi/ **4** to prepare *ṭabiix*. - vn *ṭabx, ṭabiix*; ava *ṭaabix*; pva *maṭbuux*.

طبخ *ṭabx* **1** /n/ any of a variety of plastic pastes used by artists and in industry. **2** /adj invar/ solid, compact. *ɣuweefa ṭabx* a solid bracelet.

طبخة *ṭabxa* /inst n, pl *-aat*/ a (single) cooking. ‖*ṭabax ṭabxa* he cooked up a plot. *-xassar iṭ-ṭabxa ɛafaan bi-malliin filfil [prov]* (he spoiled the cooking for (want of) a millime's worth of pepper) ≈ he spoiled the ship for a ha'porth of tar.

طبيخ *ṭabiix* /n/ **1** cooking, cuisine. ‖*ʕif-firka di fuɣl-a-ha ṭabiix* this company is thoroughly corrupt. **2a** dish cooked with stock or sauce (as opposed to fried dishes or salads). **2b** *[rur]* vegetables intended for cooking in stock or sauce.

طبّاخ *ṭabbaax* /n */ (male) cook, chef. ‖*ṭabbaax is-simm' bi-yduuq-u [prov]* (one who cooks poison tastes it) everybody shares in the benefit of his actions.

مطبخ *maṭbax* /n pl *maṭaabix*/ kitchen.

اتطبخ *ʕiṭṭabax* or *ʕiṭṭabax* /vi/ passive of *ṭabax*. - iva *miṭṭibix*.

انطبخ *ʕinṭabax* = *ʕiṭṭabax*. - iva *minṭibix*.

طبّخ *ṭabbax* /vt/ **1** to prepare (a mixture, paste or the like) by cooking. **2** to cook up (a plot, trick etc.). - vn *ṭaṭbiix*; ava/pva *miṭabbax*.

تطبيخة *ṭaṭbiixa* /n pl *-aat*/ **1** mixture of different herbs or medicines prepared by cooking (in folk medicine). **2** confusion, mess.

اتطبّخ *ʕiṭṭabbax* or *ʕiṭṭabbax* /vi/ passive of *ṭabbax*. - iva *miṭṭabbax*.

[1] ط ب ر see ط ب ا ر : *ṭubaar*

[2] ط ب ر see ط ب و ر : *ṭabuur*.

ط ب س

طبسيّة *ṭubsiyya* /n pl *-aat, ṭabaasi/ [rur]* large deep metal bowl.

ط ب ش

طبس *ṭabaʃ*[1] *(u)* **1** /vi/ to collide, bump. *ʕil-markib ṭabaʃit fir-raṣiif* the ship collided with the pier. **2** /vt/ to hit, bump into. *ʕil-ɛarabiyya kaanit ḥa-tuṭbuf-ak* the car nearly hit you. - vn *ṭabaʃaan, ṭabf*; ava *ṭaabif*; pva *maṭbuuf*.

طبش *ṭabaf*[2] /n pl *ṭubúfa/ [abus]* ugly mug.

أطبس *ʕaṭbaf* /adj, fem *ṭabfa*, pl *ṭubf/ [deris]* dim-sighted.

اتطبش *ʕiṭṭabaf* or *ʕiṭṭabaf* /vi/ to be hit, be bumped into. - iva *miṭṭibif*.

انطبش *ʕinṭabaf* = *ʕiṭṭabaf*. - iva *minṭibif*.

طبّش *ṭabbif* /vi/ **1** to move about blindly. *ʕin-nuur iṭṭafa wil-waaḥid baqa maafi yṭabbif* the light went out and I groped about blindly. **2** to splash about in water. *ʕiṭɛallimt' il-ɛoom aṭbiif* I learnt swimming by splashing about in the water, I learnt to swim all by myself. - vn *aṭbiif*; ava *miṭabbif*.

اتطبّش *ʕiṭṭabbif* or *ʕiṭṭabbif* /vi/ (impersonal) passive of *ṭabbif. di mayya yiṭṭabbif fiiha* is this the sort of water for splashing around in! - iva *miṭṭabbif*.

ط ب ش ر

طباشير *ṭabaʃiir* (also *tabaʃiir*) /n/ (blackboard) chalk.

طباشيرة *ṭabaʃiira* (also *tabaʃiira*) /n/ stick or piece of chalk.

طباشيراية *ṭabaʃiraaya* (also *tabaʃiraaya*) = *ṭabaʃiira*.

ط ب ط ب

طبطب *ṭabṭab* /vi/ to give repeated pats (particularly of affection or consolation). *ṭabṭabit ɛal-ḥuṣaan wi-ddit-lu sukkar* she patted the horse and gave it some sugar. *ma-ṭṭabṭabii-ʃ ɛal-ɛagiina ḥa-twassaxii-ha* stop patting the piece of dough, you will make it all dirty. - vn *ṭabṭaba*; ava *miṭabṭab*.

طبطاب *ṭubṭaab: ga ɛala ṭ-ṭubṭaab* it came just as (and when) wanted, as in *ʕif-fuɣla gat-lu ɛala ṭ-ṭubṭaab* the job just fell into his lap.

اتطبطب *ʕiṭṭabṭab* /vi/ (impersonal) passive of *ṭabṭab*. *ʕana miʃ ɛaayiz yiṭṭabṭab ɛalayya ṭuul il-waqt* I don't want to be patted (on the shoulder) all the time. - iva *miṭṭabṭab*.

ط ب ع

طبع *ṭabaɛ (a)* /vt/ **1** to print. *ṭabɛ il-film* printing the film. **2** to mark, impress. *ʕil-ɛiʃa ṭabaɛit-u b-ṭabɛa wiḥʃa* life has stamped him with an ugly nature. — /vi/ **3** to leave an impression, leave a mark. *ʕil-xitm' da miʃ mumkin yiṭbaɛ ɛaʃ-famɛ* this stamp will not make an impression on wax. - vn *ṭabɛ, ṭabaɛaan*; ava *ṭaabiɛ*; pva *maṭbuuɛ*.

طبع *ṭabɛ* /n pl *ʕaṭbaaɛ, ṭibaaɛ/* nature, character. *ṭabɛ' damawi* sanguine temperament. *ʕiṭ-ṭabɛ' fii ɣallaab* his nature gets the better of him. *baliid iṭ-ṭabɛ* lazy and indolent by nature. *da ṭabɛ id-dinya* that's the way things are. *subḥaan allaah fi-ṭabɛ-ak* I can't make you out. ‖*biṭ-ṭabɛ* of course, naturally.

¶ *ṭabɛan* /adv/ of course, naturally. *ma-huwwa ṭabɛan* but of course.

طبعة *ṭabʕa* /n pl *-aat*/ **1** instance noun of *ṭabʕ*. **2** printing, impression. *ʃiṭ-ṭabʕa t-tanya ḥa-tiṭlaʕ qurayyib* the second impression (of the book) will be out soon. **3** stamp of character. *ʃil-biiʃa ṭabaʕit-hum bi-ṭabʕa zifra* the environment left an unpleasant mark on them.

طابع *ṭaabiʕ, ṭaabaʕ* /n/ **1**↑ /pl *ṭibaaʕ*/ characteristic, feature, cast. *ʃuɤniyya laha ṭaabaʕ xafiif* a song of light mood. *wiff-a-ha luh ṭaabiʕ muʕayyan* her face has a particular look about it. **2** /pl *ṭawaabiʕ*/ **2a** postage stamp. **2b** impression, stamp. ‖*ṭaabiʕ il-ḥusn* dimple in the chin.

مطبوعات *maṭbuʕaat* /pl n/ printed materials, publications.

طباعة *ṭibaaʕa* /n/ (art or trade of) printing. *makanit ṭibaaʕa* printing press.

طبيعة *ṭabiiʕa* /n/ **1** *ʃiṭ-ṭabiiʕa* nature, the natural world. *gamaal iṭ-ṭabiiʕa* the beauty of nature. **2** natural state, normal condition. *ʃiṭ-ṭaṣlaqa baqit iṭ-ṭabiiʕa f-fuɤl-i-na walla ʃeeh* has shoddiness become our norm of work, or what? ‖*bi-ṭabiiʕit il-ḥaal* normally, as a matter of course. - *ʕala ṭ-ṭabiiʕa* in situ, as in *muhandis il-misaaḥa b-yiṭlaʕ yiftaɤal ʕaṭ-ṭabiiʕa* the surveying engineer goes to work on the site, *nirgaʕ nifuuf il-ḥikaaya ʕala ṭabiʕit-ha* let's go back and examine the matter in context. **3** physics. *ṭabiiʕa nawawiyya* nuclear physics. — /pl *ṭabaayiʕ*/ **4** nature, character. *ʃiṭ-ṭabiiʕa l-ʃinsaniyya* or *ṭabiiʕit il-ʃinsaan* human nature. *ṭabiiʕit if-fuɤl* the nature of the work. ‖*huwwa ṭabiʕt-u ynaam badri* it's his custom to go to bed early.

طبيعي *ṭabiiʕi* **1** /adj */ **1a** natural, pertaining to nature. *ḥariir ṭabiiʕi* (pure) silk. *ʃil-ʕuluum iṭ-ṭabiʕiyya* the natural sciences. ‖*ṭarḥa ṭabiiʕi* silk headveil. **1b** physical. *ṭibbⁱ ṭabiiʕi* physical medicine. *ʕilaag ṭabiiʕi* physiotherapy. **1c** natural, normal. *baṭn-a-ha rigʕit liʃ-ʃakl iṭ-ṭabiiʕi* her abdomen has returned to its normal size. *wilaada ṭabiʕiyya* normal childbirth. **2** /adv/ **2a** of course, naturally. **2b** by nature. *ʃil-mawasiir il-fuxxaar ṭabiiʕi ʕazla lil-kahraba* pipes of faience are, by nature, non-conductors of electricity.

طبّاع *ṭabbaaʕ* /n */ printer.

طبّيع *ṭabbiiʕ* /n pl *ṭabbiiʕa*/ printer.

مطبعة *maṭbaʕa* /n pl *maṭaabiʕ*/ **1** printing press. *maṭbaʕit ʃistinsil* mimeograph machine: **2** printing house, press.

مطبعجي *maṭbaʕgi* /n pl *-yya*/ printer.

اتطبع *ʃiṭṭabaʕ* or *ʃiṭṭabbaʕ* /vi/ passive of *ṭabaʕ*. - iva *miṭṭibiʕ*.

انطبع *ʃinṭabaʕ* = *ʃiṭṭabaʕ*. - vn *ʃinṭibaaʕ*; iva *minṭibiʕ*.

انطباع *ʃinṭibaaʕ*↑ /n/ impression, notion, conception.

انطباعة *ʃinṭibaaʕa*↑ /unit n, pl *-aat*/ an impression, a notion, a conception.

انطباعي *ʃinṭibaaʕi* /adj/ impressionistic, intuitive, subjective.

طبّع *ṭabbaʕ* /vt/ **1** to cause to adapt or conform (to s.th.). *ṭabbaʕtⁱ mraat-i ʕala ṭabʕ-i* I moulded my wife to my own nature. *taṭbiiʕ iṭ-ṭabl* synchronization of the drum rhythm (to the dance). **2** *[tech]* to temper, check and grind (the cutting parts of a lathe). - vn *taṭbiiʕ*; ava/pva *miṭabbaʕ*.

اتطبّع *ʃiṭṭabbaʕ* or *ʃiṭṭabbaʕ* /vi/ to be or become adapted. *ʃiṭṭabbaʕtⁱ bil-beet xalaaṣ* I've finally got used to the house. *ʃiṭ-ṭabʕⁱ yiɤlib it-taṭabbuʕ [prov]* nature is stronger than nurture. - vn *taṭabbuʕ*; ava/iva *miṭabbaʕ*.

ط ب غ ر –

طبوغرافيا *ṭubuɤrafya* <It> /n/ topography.

طبوغرافي *ṭubuɤraafi* /adj/ topographical.

ط ب ق

طبق *ṭabaqᵘ (u, a)* **1** /vt/ to fold in two. *ṭabaq ir-riɤiif ʕag-gibna w-qaʕad yaakul fii* he folded the loaf around the cheese and started eating it. — /vi/ **2** to pierce the ears (for earrings). *qulayyil illi b-yuṭbuqu l-banat-hum il-ʃayyam-di* not many people nowadays have their daughters' ears pierced. **3** to take a constricting hold. *ṭabaqtⁱ f-zoor-u* I grabbed his throat. ‖*nafas-i ṭaabiq ʕalayya* I feel suffocated. - *ʃil-buliis ṭabaq ʕala l-beet* the police closed in on the house. - vn *ṭabq, ṭabaqaan*; ava *ṭaabiq*.

طبقة *ṭabqa* /n pl *-aat*/ bunch, handful. *ṭabqit baqduunis* a bunch of parsley.

طابق *ṭaabiqᵗ* /n pl *ṭawaabiq*/ **1** storey, floor. **2** *[plumb]* screw-cap on the bent sealing-pipe of a sink, bath or wash-basin. ‖*xalli ṭ-ṭaabiq mastuur* ≈ leave well alone, don't make a scandal. **3** chip used in games, such as backgammon or draughts. **4** round in games such as backgammon and dominoes.

طبق *ṭibq: ṭibq il-ʃaṣl* identical replica, exact copy.

¶ *ṭibqan li-*↑ /prep/ according to. *ṭibqan li-ʃaḥkaam il-qanuun* according to the provisions of the law.

طبق *ṭabaq²* /n pl *ṭubaaq, ʃaṭbaaq*/ **1** plate, dish. ‖*ṭabaq xuuṣ* shallow basket of palm fronds. - *ṭabaq ṭaayir* flying saucer. - *ṭabaq il-buṣla* compass bowl. - *ṭabaq il-yoom* today's special, dish of the day. - *ṭabaq baladi* circular motif in tent appliqué work (see Pl.H, 17). **2** clay pigeon.

طبقة *ṭabaqa* /n pl *-aat*/ **1a** layer. *taḥtaha ṭabaqit raml* under it is a layer of sand. **1b** coating. *ṭabaqit kuruum*

chrome plating. *ʕaleeha ṭabaqa fusfuriyya ʕaʃaan tinawwar fil-leel* it has a phosphorescent coating so it will glow at night. **2** class, level. *ʔiṭ-ṭabaqa l-kadḥa* the working class. **3** tone, register (in music or speech). *ṣoot-u ylaali fiṭ-ṭabaqa l-ʕalya* his voice rings in the high register. *ʔil-mumassil yiḥawwil iṭ-ṭabaqa l-ʕadiyya l-ṭabaqa nfiʕaliyya* the actor changes from normal pitch to a melodramatic pitch.

مطبقيّة *maṭbaqiyya* /n pl *-aat*/ **1** plate rack. **2** type of flat basket. **3** any large kind of bowl.

اتطبق *ʔiṭṭabaq* or *ʔiṭṭabaq* /vi/ **1** to apply, be relevant. *ʔin-nuṣuuṣ il-qanuniyya lli mumkin tiṭṭibiq ʕalee* the legal texts which can be applied to him. **2** to be congruent. **3** passive of *ṭabaq*[1]. - ava/iva *miṭṭibiq*.

انطبق *ʔinṭabaq* = *ʔiṭṭabaq*. - ava/iva *miṇṭibiq*.

طبّق *ṭabbaq* /vt/ **1a** to fold, fold up. *ṭabbaqit il-ɣasiil* she folded up the laundry. *ṭabbaq ʔiid-u ʕal-ʔirf* he closed his hand on the piastre. ‖ *(fiṭiir) miṭabbaq [rur] = (fiṭiir) mifaltit* (q.v.). **1b** to crush, bend, dent, crumple. *ʔil-ʔutubiis ṭabbaq il-ʕarabiyya* the bus crushed the car. **2a** to fit together, synchronize, make congruent. *muhandis iṣ-ṣoot ṭabbaq iṣ-ṣoot ʕala ṣ-ṣuura* the sound engineer dubbed the sound-track onto the film. **2b** to apply, implement. *ṭaṭbiiq ʕamali liṭ-ṭariiqa di* a practical application of this method. **3**↓ to compare. **4** *[mus]* to syncopate. **5** to work (two consecutive) shifts. *ṭabbaq (il-leel ʕan-nahaar) wi-xad il-yoom kull-u noom* he worked a double shift (night and day) and (then) took a whole day for sleeping. **6** to extend (a drawn game) by doubling the score at which the players aim in order to determine the winner. - vn *ṭaṭbiiq*; ava *miṭabbaq*.

تطبيق *ṭaṭbiiq* /n pl *-aat*/ repetition drill for reinforcement (in education).

تطبيقة *ṭaṭbiiqa, ṭaṭbiiqa* /pl *-aat, -aat*/ unit noun of *ṭaṭbiiq*.

تطبيقى *ṭaṭbiiqi* /adj/ applied. *ʔil-funuun it-taṭbiqiyya* the applied arts.

اتطبّق *ʔiṭṭabbaq* or *ʔiṭṭabbaq* /vi/ passive of *ṭabbaq*. - iva *miṭṭabbaq*.

طابق *ṭaabiq*[2] /vt/ **1** to match, compare. *ṭabiqt' ʔiimit if-fiik bil-fatuura* I checked the value of the cheque against the invoice. **2** to match with. *ʔil-farditeen ṭabʔu baʕḍ* the two (shoes) matched. *ʔil-baṣamaat muṭabʔa* the finger-prints match (one another). - vn *miṭabʔa, muṭabʔa*; ava *miṭaabiq, muṭaabiq*.

مطابقة *muṭabʔa* /n pl *-aat*/ **1** correspondence, congruity. **2** comparison.

اتطابق *ʔiṭṭaabiq* or *ʔiṭṭaabiq* /vi/ to be matched, be compared. - vn *ṭaṭaabuq*; iva *miṭṭaabiq*.

ط ب ل

طبل *ṭabal (u)* /vt/ to drum. *ṭabal ṭabla w-zamar zamra* (1) he got a lot of fuss and attention. (2) he had a single shot at it. - vn *ṭabl*.

طبل *ṭabl* /n/ **1** (sound of) drumming. ‖ *ṭabl' w-muzmaar* noisy celebration. - *ʔism-u zayy iṭ-ṭabl' fis-suuq* he's very well-known. **2** /pl *ṭubuul*/ (large) drum. *zayy iṭ-ṭabl - ṣoot ʕaali w-goof xaali [prov]* (like a large drum, with much noise and an empty inside) ≈ empty vessels make the most sound. *ṭabl' baladi* (1) bass drum. (2) small traditional band basically consisting of one or more bass drum players and one or more *muzmaar* (q.v.) players; such bands play traditional tunes and perform on a variety of occasions such as circumcisions, pilgrims' return from Mecca, weddings etc. ‖ *biṭ-ṭabl il-baladi* with the greatest difficulty, by means of the most extreme measures, as in *ʔitxallaṣna minnu biṭ-ṭabl il-baladi* we got rid of him only with the greatest difficulty, *ma-b-yiṣḥaa-ʃ min in-noom ʔilla biṭ-ṭabl il-baladi* he wakes only with the greatest difficulty, *ʔil-buqaʕ ma-b-tiṭlaʕ-ʃ' wala biṭ-ṭabl il-baladi* the stains are impossible to remove.

طبلة *ṭabla* /n pl *-aat, ṭubal*/ **1** clay or wooden funnel-shaped drum with a head of goatskin or fishskin (see Pl.J, 5), (also loosely) any kind of drum. *ṭablit il-widn* eardrum. ‖ *la yinfaʕ ṭabla wala ṭaar* ≈ of no use whatsoever. **2** way of drumming, drum rhythm. *ṭablit-u miʃ kiwayyisa* his drumming isn't good. **3** padlock. **4** wattle (of a turkey).

طبليّة *ṭabliyya* /n pl *ṭabaali*/ **1** low round table made of rough wood (see Pl.C, 2) used particularly in the ccuntryside and by the poor as a dining table. **2** any of a range of wooden platforms used for various purposes (e.g., platform on a crane, crow's-nest on a ship, board on which mortar is mixed). **3** trapdoor of a gallows. — /no pl/ **4** group construction workers who mix and carry mortar.

طبلجى *ṭablagi* /n pl *-yya*/ drummer.

طبّال *ṭabbaal* /n */ drummer.

طبّل *ṭabbil* /vi/ **1** to beat a drum, drum. *ʃuɣlit-u ʔinnu yṭabbil ṭuul in-nahaar* his job is to beat the drum all day long. ‖ *ṭabbil fil-miṭṭabbil* ≈ to break down open doors. **2** to make propaganda. *fii naas kida ṭabiʕit-hum yiṭabbilu lil-ḥukkaam* there are people who are inclined to drum up support for the rulers. - *ṭabbil-li w-ʔana ʔazammar-lak [prov]* (drum for me and I'll pipe for you) you scratch my back and I'll scratch yours. **3** to become infertile (of agricultural land, by reason of soil salination or the like). ‖ *ʔid-dinya ṭabbilit* the whole

thing came to nothing. - vn *taṭbiil*; ava/pva *miṭabbil*.
مطبّلاتي *miṭabbilaati* /n pl *-yya*/ **1** drummer. **2** flatterer.
اتطبّل *ʔiṭṭabbil* or *ʔiṭṭabbil* /vi/ (impersonal) passive of *ṭabbil*. *ʔil-ɛasaakir laazim yiṭṭabbil laha ɛafaan tiɛraf timfi b-xaṭwa waḥda* there must be drumming for soldiers to be able to march in step. - iva *miṭṭabbil*.

ط ب ل و ن see ت ب ل و : *ṭabloon*

ط ب ن [1]
طابونة *ṭabuuna* /n pl *-aat, ṭawabiin/ [obsol]* bakery.

ط ب ن [2] see ط ب ا ن : *ṭabaan, ṭabaana*

ط ب ن ج
طبنجة *ṭabanga* <T *tabanca*> /n pl *-aat*/ pistol, revolver. ‖*ḍaarib id-dinya ṭabanga* he doesn't give a damn about anything.

ط ب و ر
طابور *ṭabuur* <T *tabur*> /n pl *ṭawabiir*/ **1** row, queue. *bi-nruṣṣ il-ɛeef ṭabuur* we arrange the bread in a row. *wiqift[i] fiṭ-ṭabuur saɛteen* I stood in the queue for two hours. *yimfu ṭabuur wara baɛḍ* they walk in single file. ‖*ṭabuur iṣ-ṣubḥ* morning line-up of school-children. - *ʔiṭ-ṭabuur il-xaamis* the fifth column. **2** *[mil]* **2a** drill. *ʔarḍ[i] ṭabuur* parade ground. **2b** column.

ط ب ى
طابية *ṭabya* <T *tabya*> /n pl *-aat, ṭawaabi/* **1** fortress, castle. **2** rook, castle (in chess). **3** *[rur]* heap of straw.

ط ج ن
طاجن *ṭaagin* /n pl *ṭawaagin/* **1** earthenware oven casserole. ‖*ʃaayil ṭaagin sitt-ak ɛala dmaaɣ-ak leeh* why are you so upset? **2** any of various oven-cooked dishes such as *ṭaagin makaroona* dish of baked pasta and meat, *ṭaagin baṣal* dish of onions baked with meat and tomato sauce.
¶ *ṭaagin il-ɋafa* the cleft of the nape of the neck. *ʔiddet-lu ɛala ṭaagin ɋafaa* I smacked him bang centre on the neck.
مطجّون *maṭguun* /adj */ muffled (of sound).
طجّن *ṭaggin* /vi/ to speak harshly, lash out with one's tongue. - vn *taṭgiin*; ava *miṭaggin*.
اتطجّن *ʔiṭṭaggin* or *ʔiṭṭaggin* /vi/ (impersonal) passive of *ṭaggin*. *ʔana miʃ min illi yiṭṭaggin maɛaahum* I'm not the type to be ordered about. - iva *miṭṭaggin*.

ط ح ل
طحال *ṭuḥaal* /n pl *-aat/ [anat]* spleen.

ط ح ل ب
طحلب *ṭuḥlub* /n pl *ṭaḥaalib/* moss, lichen.

ط ح ن
طحن *ṭaḥan (a)* /vt/ to grind, mill. *baɛḍ[i] ma nnaʃʃif id-dura niṭḥan-ha dɋiiɋ* after we've dried the maize we grind it into flour. - vn *ṭaḥn, ṭiḥiin*; ava *ṭaaḥin*; pva *maṭḥuun*.
طحين *ṭiḥiin* /n/ grist. *makanit* (or *wabuur) ṭiḥiin* grist mill. ‖*ma-ḥadd[i]-ʃ yiɛraf yiɋlib waraa ṭḥiin [rur]* no one can outwit him.
طاحونة *ṭaḥuuna* /n pl *-aat, ṭawaḥiin/* **1** grist mill. **2** grinder. *ṭaḥuunit bunn* coffee grinder. **3** windmill.
طحينة *ṭiḥiina* /n/ thin paste of crushed sesame seeds. *salaṭit ṭiḥiina* sauce or dip of sesame paste (with, e.g., garlic, lemon juice, parsley etc.). ‖*ɛamal il-baḥr[i] ṭḥiina* he painted a (misleadingly) rosy picture.
طحيني *ṭiḥiini* /adj/ **1** pertaining to sesame paste. ‖*ḥalaawa ṭiḥiniyya* halva. **2** beige in colour.
طحّان *ṭaḥḥaan* /n */ miller.
طحّانة *ṭaḥḥaana* /n pl *-aat/* grinder. *ṭaḥḥaanit filfil* pepper mill.
مطحن *maṭḥan* /n pl *maṭaaḥin/* grist mill (especially for flour).
مطحنة *maṭḥana* /n pl *maṭaaḥin/* hand-mill, grinder. *maṭḥanit bunn* coffee grinder. ‖*lisaan-u zayy il-maṭḥana* he never stops talking.
انطحن *ʔiṭṭaḥan* or *ʔiṭṭaḥan* /vi/ to be ground. - iva *miṭṭiḥin*.
انطحن *ʔinṭaḥan* = *ʔiṭṭaḥan*. - iva *minṭiḥin*.
طاحن *ṭaaḥin* /vt/ to struggle with. *ʔil-markib fil-baḥr[i] bi-ṭṭaaḥin il-moog* the boat is at sea battling with the waves. - vn *miṭaḥna*; ava *miṭaaḥin*.
اتطاحن *ʔiṭṭaaḥin* /vi/ to struggle (with o.a.). *ʔiṭṭaḥnu sawa* they struggled against one another, they fought each other. - ava *miṭṭaaḥin*.

ط خ خ see also ط ا خ
طخ *ṭaxx (u)* /vt/ to strike or hit loudly. *ṭaxxeet-u ɋalam* I gave him a resounding slap. ‖*ṭaxx[i] ṭalɋiteen* he fired off two shots. - *ṭaxx[i] miʃwaar* to cover a long distance unwillingly (usually on foot), as in *ʔil-ʔutubiis ma-gaa-ʃ fa-ṭaxxeet il-miʃwaar lil-beet* the bus didn't come so I had to walk all the way home. - vn *ṭaxx, ṭaxaxaan*; ava *ṭaaxix*; pva *maṭxuux*.
طخّة *ṭaxxa* /inst n, pl *-aat/* a blow, a shot. ‖*ṭaxxit ʃams* sunstroke.

اتطخّ ʔitṭaxx or ʔiṭṭaxx /vi/ passive of ṭaxx. ʔitṭaxx' ɛyareen fi-nafuux-u he got shot twice in the head. -iva miṭṭaxx.
انطخّ ʔinṭaxx = ʔitṭaxx. -iva minṭaxx.

ط ر [1]
طرة ṭura /prop n/ Tura, area a little to the south of el-Ma'adi known for its quarries and prison.

ط ر [2] see ط ر ج : ṭurgi

ط ر ء
أطرأ ṭaraʔ (a) /vi/ to occur unexpectedly. ṭaraʔ ɛala baal-u (or ɛala xaṭr-u) it occurred to him, it crossed his mind. fikra ṭarʔa a passing notion. ʔaxxarit-u ḥaala ṭarʔa an unexpected situation has held him up. -vn ṭaraʔaan; ava ṭaariʔ.
طارئ ṭaariʔ 1 /n pl ṭawaariʔ/ emergency. ẓarf' ṭaariʔ force majeure. 2 ṭawaariʔ /pl n/ state of emergency. tamwiin iṭ-ṭawaariʔ emergency rations. ḥaalit ṭawaariʔ state of emergency.

ط ر ب [1]
طرب ṭarab [1] (i) /vt/ to affect pleasurably with song. ||sayyidit iṭ-ṭarab epithet of the singer Umm Kalthum. -vn ṭarab; ava ṭaarib.
طرب ṭarab [2] /n/ 1 delight or pleasure derived from singing. 2 vocal entertainment. ʔahl iṭ-ṭarab skilled and popular professional singers.
اتطرب ʔiṭṭarab [1] or ʔiṭṭarab [2] /vi/ passive of ṭarab [1]. -iva miṭṭirib.
أطرب ʔaṭrabˀ = ṭarab [1]. -vn ʔiṭraab; ava muṭrib.
مطرب muṭrib /n */ professional singer.

ط ر ب [2]
طرب ṭarab [3] (i) /vt/ to frighten. leeh kida ṭarabt il-ɛayyil what did you frighten the child like that for? -vn ṭarabaan; ava ṭaarib; pva maṭruub.
طربة ṭarbaˀ /inst n, pl -aat/ a fright. ṭaasit iṭ-ṭarba kind of bowl used in folk medicine cures (see ṭaasa).
اتطرب ʔiṭṭarab [2] or ʔiṭṭarab [3] /vi/ passive of ṭarab [3]. -iva muṭṭirib.
انطرب ʔinṭarab = ʔiṭṭarab. -iva minṭirib.

ط ر ب [3]
طرب ṭarb (also kufta biṭ-ṭarb) /n/ minced meat patties wrapped in fat from the belly of an animal and grilled on skewers.

ط ر ب د see ط ر ب ي د : ṭurbiid

ط ر ب ز see ط ر ب ي ز : ṭarabeeza, ṭarabiiza

ط ر ب ش [1]
طربش ṭurubʃ /masc and fem n, pl -aat/ simpleton, dullard.

ط ر ب ش [2]
طربوش ṭarbuuʃ <T tarbuş from P> /n pl ṭarabiiʃ/ 1 tarbush (Pl.F, 13). ||ṭarbuuf il-malik [bot] glory tree (Cleradendron splendens). 2 any of a variety of devices used as caps or cappings, e.g., flame guide ring on a primus stove, dental crown or cap, restraining cap on the spindle of a spinning machine.
طرابيشي ṭarabiiʃi 1 /n pl -yya/ maker and seller of tarbushes. 2 /adj/ of the (red) colour of a tarbush.
اتطربش ʔiṭṭarbiʃ or ʔiṭṭarbiʃ /vi/ [obsol] to become a tarbush wearer, become a white-collar worker. -iva miṭṭarbiʃ.

ط ر ب ظ see ط ر ب ي ز : ṭarabeeza

ط ر ب ق
طبرق ṭarbaq /vt/ to smash, demolish. -vn ṭarbaqa; ava/pva miṭarbaq.
اتطربق ʔiṭṭarbaq or ʔiṭṭarbaq /vi/ 1 to collapse. ḥa-tʃiili da yiṭṭarbaq da if you take this away that will collapse. lamma tiṭṭarbaq is-sama ɛal-ʔarḍ when the sky falls to the ground (i.e., never). 2 to be demolished. -ava/iva miṭṭarbaq.

ط ر ب ن [1] see ت ر ب ن [1]

ط ر ب ن [2] see ط ر ب ي ن : ṭurbiin

ط ر ب ن –
طربنطيّة ṭarbanṭiyya /n pl -aat/ caterer's portable set of tea- and coffee-making equipment.

ط ر ب ي د
طربيد ṭurbiid <Engl> /n pl -aat/ 1 torpedo. lanf' ṭurbiid torpedo boat. 2 fire-cracker.

ط ر ب ي ز
طرابيزة ṭarabeeza, ṭarabiiza (also ṭarabeeẓa, tarabeeẓa) <Gr trapezi> /n pl -aat/ table. ṭarabeezit it-tawalitt dressing table. ṭarabeezit is-sufra dining table.

ط ر ب ي ن
طربين ṭurbiin <Fr> /n pl -aat/ turbine.

ط ر ج

طورجي *ṭurgi* /n pl *-yya*/ middle level officiant at *zaar* ceremonies.

ط ر ح

طرح *ṭaraḥ (a)* /vt/ **1** to bear, yield (fruit, of a tree). *ʃif-ʃagara ṭaraḥit talat lamunaat* the tree bore three lemons. *fagarit law ma-tiṭraḥ-ʃ [prov]* the 'if' tree bears no fruit. — /vi/ **2**↑ to pose, present. *ʃil-ʃasʃila l-maṭruuḥa* the questions posed. **3** to cast (a net). **4** *[math]* to subtract. - vn *ṭarḥ, ṭaraḥaan*; ava *ṭaariḥ*; pva *maṭruuḥ*.

طرح *ṭarḥ* /n/ **1** /vn/ ‖*(ʃarḍ[i]) ṭarḥ il-baḥr* alluvial land. **2** /n/ pollen (of a male palm). **3** *ʃiṭ-ṭarḥ [Jud]* the Midrash.

طرحة *ṭarḥa* /n/ **1** /inst n, pl *-aat*/ a (single) yield (of a tree, net cast etc.). **2** /pl *ṭuraḥ*/ covering or veil for a woman's head, usually a black rectangular piece of cloth (see Pl.F, 10). ‖*w-allaahi ḥ-alabbis-ak ṭarḥa* (by God, I'll make you wear a veil) ≈ I'll beat you into submission (insult or threat to a man).

طرحيّة *ṭarḥiyya* /n pl *-aat*/ **1** one season's yield (of a tree). **2** *[math]* subtraction sum.

طريحة *ṭariiḥa* /n pl *ṭaraayiḥ*/ **1** (manual) work, assignment, task. *fuɤl[i] biṭ-ṭariiḥa* piece-work. **2** *[slang]* a thrashing, a hiding.

طرّاحة *ṭarraaḥa* /n pl *-aat*/ cast net (for fishing).

مطرح *maṭraḥ* /n pl *maṭaariḥ*/ **1** place. *maṭraḥ il-ɋuṭn[i] nizraɛ ḥubuub il-fuul* we sow broad beans where the cotton was. *ḥuṭṭi nafs-ik maṭraḥ-i* put yourself in my place. *kull[u] ḥaaga maṭraḥ-ha* everything is in order. *ḥuṭṭ[i] rigl-ak maṭraḥ rigl is-saɛiid tisɛad [prov]* follow in the footsteps of the lucky man and you will be lucky. ‖*ma-tifrabʃ[i] maṭraḥ ḥadd* don't drink after someone else (from the same glass). **2** place, space. *ḥasab il-maṭaariḥ il-faḍya fis-siima* according to the (number of) empty places in the cinema. *gat il-ḥaziina tifraḥ ma-laɋit-ʃ[i] laha maṭraḥ [prov]* ≈ one who is born to suffer will find no opportunity to rejoice. **3**↓ room. *faɋɋa b-ʃarbaɛ maṭaariḥ* a four-room flat.

¶ *maṭraḥ ma* /conj/ wherever. *maṭraḥ ma truuḥ ʃana waraak* wherever you go I will follow.

مطرحة *maṭraḥa* /n pl *maṭaariḥ*/ bat-shaped implement used in the preparation of flat bread (see Pl.B, 4).

انطرح *ʃinṭaraḥ*↑ /vi/ passive of *ṭaraḥ*. - vn *ʃinṭiraaḥ*; ava *miniṭiriḥ*.

طرّح *ṭarraḥ* /vt/ **1** to use a *maṭraḥa* on (a piece of dough, to flatten it). **2** to fertilize (a female palm). - vn *taṭriiḥ*; ava/pva *miṭarraḥ*.

تطريحة *taṭriiḥa* /n pl *-aat*/ covering or veil for a woman's head = *ṭarḥa* (q.v.).

اتطرّح *ʃiṭṭarraḥ* or *ʃiṭṭarraḥ* /vi/ passive of *ṭarraḥ*. - iva *miṭṭarraḥ*.

ط ر د

طرد *ṭarad (u)* /vt/ **1** to chase away, drive away. *tuṭrud il-ḥiddaaya ɛan il-katakiit* she drives the kite away from the chicks. **2a** to evict, expel. *ʃawwil ma tkawwimit il-ʃugra ɛaleehum ṭaradt-u-hum* as soon as their rent (arrears) accumulated, I evicted them. *ʃitfaḍḍal min ɤeer maṭruud* please get out before you are thrown out! **2b** to dismiss, fire. *tawṣiyya b-ṭard-u* a recommendation for his dismissal. — /vi/ **3a** to recede, fall in level (of water). **3b** to flow quickly (of a river or sea). **4** to swarm (of bees). - vn *ṭard, ṭaradaan*; ava *ṭaarid*; pva *maṭruud*.

طرد *ṭard* /n pl *ṭuruud*/ package, parcel.

طرّاد *ṭarraad* /n pl *-aat*/ **1** *[naut]* cruiser. **2** *[agric]* attachment (usually of wood) which can be mounted above a ploughshare in order to widen the furrow.

اتطرد *ʃiṭṭarad* or *ʃiṭṭarad* /vi/ passive of *ṭarad*. - iva *miṭṭirid*.

انطرد *ʃinṭarad* = *ʃiṭṭarad*. - iva *minṭirid*.

طارد *ṭaarid* /vt/ to chase, pursue. - vn *muṭarda*↑; ava *miṭaarid, muṭaarid*↑; pva *muṭaarad*↑.

اتطارد *ʃiṭṭaarid* or *ʃiṭṭaarid* /vi/ to be chased, be pursued. - iva *miṭṭaarid*.

ط ر ر [1]

طرّة *ṭurra[1]* /n/ **1** knotted handkerchief. **2** children's game for two to four players in which the rules of the players are determined by lot (toss-up, counting-out etc.); the winner sentences the loser to a specific number of lashes with a rolled and knotted handkerchief, and designates a player to execute the sentence. **3** bundle (of hides, in the jargon of tanners).

طرّر *ṭarrar* /vt/ to roll (hides) into a bundle. - ava/pva *miṭarrar*.

اتطرّر *ʃiṭṭarrar* or *ʃiṭṭarrar* /vi/ to be rolled into a bundle (of hides). - iva *miṭṭarrar*.

ط ر ر [2]

طرّة *ṭurra[2]* <T *tura*> /n pl *ṭurar*/ **1** monogram of the Ottoman Sultan. **2** calligraphically intricate monogram in the style of that of the Ottoman Sultans. - also *ṭuɤra*.

ط ر ر [3] see ض ر ر [2]

ط ر ز

طراز *ṭiraaz* /n pl *ṭuruuz*/ **1** type, kind, class. *min*

iṭ-ṭiraaz il-ʕawwal first class. **2** style. *ṭiraaz maɣribi* North African style.

طرّز *ṭarraz* /vt/ to embroider. - vn *taṭriiz*; ava/pva *miṭarraz*.

اتطرّز *ʔiṭṭarraz* or *ʔiṭṭarraz* /vi/ to be embroidered. - iva *miṭṭarraz*.

ط ر ش [1]

طرش *ṭaraʃ[1] (u)* /vt/ **1** to vomit. ‖*ṭaariʃ id-damm* giving one's utmost, as in *ḥarim-ni mil-mukaffa maɣa ʔinn' ʕana lli ṭaariʃ id-damm' fiʃ-ʃuɣl* he's refusing me a bonus even though I've been working myself to death. **2** *[abus]* to eat. *ɣuum ʔuṭruʃ ɛaʃaan niɣsil iṭ-ṭubaaq* come on, gobble away so we can wash the dishes! - vn *ṭarʃ, ṭaraʃaan, ṭiraaʃ, ṭuraaʃ*; ava *ṭaariʃ*; pva *maṭruuʃ*.

طرش *ṭarʃ* /adv/ without ado, immediately. *ga min barra daxal ɣal-ʔakl' ṭarʃ* he came inside and before you could say Jack Robinson he was at his food.

طراش *ṭuraaf[1], ṭiraaf[1]* /n/ vomit.

انطرش *ʔinṭaraʃ[1]* /vi/ passive of *ṭaraʃ[1]*. - iva *minṭiriʃ*.

اتطرش *ʔiṭṭaraʃ[1]* = *ʔinṭaraʃ[1]*. - iva *miṭṭiriʃ*.

طرّش *ṭarraʃ* /vt/ to cause to vomit. ‖*ṭarraʃuu-ni d-damm* they gave me a hell of a time! - vn *taṭriiʃ*; ava *miṭarraʃ*.

اتطرّش *ʔiṭṭarraʃ* or *ʔiṭṭarraʃ* /vi/ passive of *ṭarraʃ*. - iva *miṭṭarraʃ*.

ط ر ش [2]

طرش *ṭiriʃ* or *ṭuruʃ (a)* /vi/ to become deaf. *ʕana ḥaasis bi-ṭaraʃaan fi-widn-i* I feel my ear going deaf. - vn *ṭaraʃaan*; ava *ṭaariʃ*.

طرش *ṭaraʃ[2] (i)* /vt/ to deafen. *ṭaraʃt-i-ni bi-gɣiir-ak* you've deafened me with your bellowing. - ava *ṭaariʃ*.

طرش *ṭaraʃ[3]* /n/ deafness.

أطرش *ʔaṭraʃ* /adj, fem *ṭarʃa*, pl *ṭurʃ*/ deaf. *zayy il-ʔaṭraʃ fiz-zaffa* (like a deaf man at a wedding celebration) completely unaware of what is going on. ‖*rigl-u ṭqiila w-ṭarʃa* he has a deadly kick (of a man). - *ʔiid-u ṭarʃa* he packs a punch.

طراش *ṭiraaʃ[2], ṭuraaʃ[2]* /n/ deafness. *ma-fii-ʃ ḥaaga b-balaaʃ ʔilla l-ɛama wiṭ-ṭuraaʃ [prov]* nothing is free except blindness and deafness.

اتطرش *ʔiṭṭaraʃ[2]* or *ʔiṭṭaraʃ[2]* /vi/ to be deafened. - iva *miṭṭiriʃ*.

انطرش *ʔinṭaraʃ[2]* = *ṭiriʃ*. - ava *minṭiriʃ*.

اطرش *ʔiṭraʃʃ* = *ṭiriʃ*. - ava *miṭṭraʃʃ*.

ط ر ش [3]

طرش *ṭaraʃ[4] (u)* /vt/ to knock down. *ṭaraʃit-ni ɣal-ʔarḍ* she knocked me to the ground. - vn *ṭaraʃ, ṭaraʃaan*; ava *ṭaariʃ*; pva *maṭruuʃ*.

اتطرش *ʔiṭṭaraʃ[3]* or *ʔiṭṭaraʃ[3]* /vi/ to be knocked down. - iva *miṭṭiriʃ*.

انطرش *ʔinṭaraʃ[3]* = *ʔiṭṭaraʃ[3]*. - iva *minṭiriʃ*.

ط ر ش [4]

طرشي *ṭurʃi* <P *turshí*> /coll n/ pickle(s). *mayyit ṭurʃi* pickle liquid (drunk by some as an appetizer).

طرشجي *ṭurʃagi* /n pl *-yya*/ pickle maker and vendor.

ط ر ش [5]

طرش *ṭurʃ* <Engl> /n/ torch, flashlight.

ط ر ش [6]

see ط ر ي ش : *ṭireeʃa, ṭureeʃa*

ط ر ش ق

طرشق *ṭarʃaq* **1** /vt/ to explode, burst. *ṭarʃaqit-lu l-balloona* she burst his balloon. **2** /vi/ to explode, burst. ‖*ʔil-waaḥid ḥa-yṭarʃaq* one could go crazy (with frustration), it's enough to drive one crazy. - vn *ṭarʃaqa*; ava/pva *miṭarʃaq*.

اتطرشق *ʔiṭṭarʃaq* or *ʔiṭṭarʃaq* /vi/ to be exploded, be burst. - vn *tiṭarʃiiq*; iva *miṭṭarʃaq*.

ط ر ط

طورطة، تورتة *ṭurṭa* <It *torta*> /n pl *-aat, turat*/ large fancy cake. - also *turta*.

ط ر ط ر [1]

طرطر *ṭarṭar[1]* /vt/ **1** to raise (e.g., ears, head, finger). *saaɣit ma ʃaaf il-ʔakl' ṭarṭar widaan-u* as soon as he saw the food he pricked up his ears. **2** to put to the trouble of coming from a distance. *ʔeeh illi ṭarṭar-ak is-saaɣa di* what made you take the trouble of coming at this hour? **3** to cut the blossom top off (maize stalks after pollination). - also *ṭarṭaf*. - vn *ṭarṭara*; ava/pva *miṭarṭar*.

طرطور *ṭarṭuur* **1** /n pl *ṭaraṭiir*/ conical cap such as is worn by a clown. ‖*huwwa faahim ʔinni ḥ-axaaf min ṭarṭuur-u* ≈ does he imagine I will be awed by his pomposity? - *(zayy) iṭ-ṭarṭuur* having no say in one's own affairs. **2** /adj invar/ good-for-nothing, useless. *da raagil ṭarṭuur ma-tḍayyaɣ-ʃ' waqt-ak maɣaa* the man's a dead loss; don't waste your time on him!

طرطورة *ṭarṭuura* /n pl *ṭaraṭiir*/ blossom end (of a maize stalk). - also *ṭarṭuufa*.

ط ر ط ر [2]

طرطر *ṭarṭar[2]* /vi/ *[slang]* to urinate from a standing position (of a man). - vn *ṭarṭara*; ava *miṭarṭar*.

اتطرطر *ʔiṭṭarṭar* or *ṭiṭṭarṭar* /vi/ (impersonal) passive of

ţarţar[2]. *baça da makaan yiţţarţar fii* is this a place to piss in?! - iva *miţţarţar*.

ط ر ط ش

طرطش *ţarţaf* /vt/ **1** to splash, spatter. **2** *[constr]* to roughcast (a wall). - vn *ţarţaſa*; ava/pva *miţarţaf*.

طرطشة *ţarţaſa* /n pl *ţaraţiif*/ a splash. ‖*ţaraţiif kalaam* rumours, bits of (incomplete and uncertain) information. *fii ţaraţiif kalaam ſinnak ħa-titraqqa* there are rumours that you will be promoted.

اتطرطش *ſiţţarţaf* or *ſiţţarţaf* /vi/ to be splashed, be spattered. - iva *miţţarţaf*.

ط ر ط ف

طرطف *ţarţaf* /vt/ to cut the blossom end off (maize stalks after pollination). - also *ţarţar*. - vn *ţarţafa*; ava/pva *miţarţaf*.

طرطوفة *ţarţuufa* /n pl *ţaraţiif*/ **1** end, tip. *ɛala ţaraţiif iṣ-ṣawaabiɛ* on tiptoe. ‖*baṣṣ-i-li min ţaraţiif manaxiir-u* he looked down his nose at me. **2** (also *tantuufa*) small (redundant) projection. **3** (also *ţarţuura*) blossom end (of a maize stalk).

اتطرطف *ſiţţarţaf* or *ſiţţarţaf* /vi/ **1** to project, hang out. *ſil-mandiil miţţarţaf min geeb-ak* the handkerchief is sticking out of your pocket. **2** to stand or be at the extreme end. *tilaaqi bet-hum miţţarţaf barra l-balad* you find their house there at the outskirts of the village. **3** passive of *ţarţaf*. - ava/iva *miţţarţaf*.

ط ر ط ق

طرطق *ţarţaq* /vt/ to prick up (one's ears). *widaan-u mţarţaqa* he's all ears. - vn *ţarţaqa*; ava/pva *miţarţaq*.

اتطرطق *ſiţţarţaq* or *ſiţţarţaq* /vi/ to be pricked up (of ears). - iva *miţţarţaq*.

ط ر ف [1]

طرف *ţarf, ţaraf*[1] /n pl *ţuruuf, ſaţraaf*/ tip, end, extremity (particularly of the body). *ţarf il-manaxiir* tip of the nose. *ſik-kilma kaanit ɛala ţarf*[i] *lsaan-i* the word was on the tip of my tongue. ‖*zaɛal-u ɛala ţarf*[i] *manaxiir-u* he's extremely short-tempered. - *ħadd*[i] *das-lak ɛala ţarf* has anyone done something to upset you?

طرفاني *ţarfaani* /adj */ extreme, furthermost. *ɛayziin niqɛud taħt if-ſamsiyya ţ-ţarfaniyya* we want to sit under the sunshade that is at the very end.

طرف *ţaraf*[2] /n pl *ſaţraaf*/ party (to a dispute, contract etc.). *ħubb*[i] *min ţaraf waaħid* one-sided love. ‖*min ţaraf* (1) on the part of, as in *ſibɛat ħadd*[i] *min ţaraf-i yſuuf il-ɛaruusa* send someone on my part to see the bride. (2) with the recommendation of, as in *hiyya l-ſaanisa min ţaraf-ak* does the young lady have your recommendation? - *ſixlaaſ* (or *xuluww*[i]) *ţaraf* official written statement of clearance of an employee's responsibility to a former employer, certificate of discharge.

اتطرّف *ſiţţarraf* or *ſiţţarraf* /vi/ **1** to be situated at the far end or extreme edge (of s.th.). **2** to go to extremes. *ſiwɛa titţarraf tiigi hina* don't you ever dare come here! - vn *taţarruf*↑; ava *miţţarraf, mutaţarrif*↑.

تطرّف *taţarruf*↑ /n/ extremism.

متطرّف *mutaţarrif*↑ **1** /n */ extremist. **2** /adj */ extreme. *yasaari mutaţarrif* an extreme leftist.

ط ر ف [2]

طريف *ţariif* /adj pl *ţuraaf, ţurafa*/ delightful, uncommonly pleasant.

أطرف *ſaţraf* /el/ more/most delightful.

ط ر ف [3]

طرف *ţaraf*[3] *(i, u)* **1** /vi/ to blink. *ſit-tiɛbaan ma-yiţrif-ſ*[i] *b-ɛeen-u ɛafaan ma-ɛanduu-ſ gufuun* a snake cannot blink its eyes because it has no eyelids. ‖*xallaa-ni baqeet qaaɛid miſ qaadir ſaţrif* he kept me (so attentive that I stared) without batting an eye. **2** /vt/ to touch or brush (the eye) in a painful way. *ħaasib - ţaraft*[i] *ɛeen-i* careful! you hurt my eye. - vn *ţarafaan, ţarfa*; ava *ţaarif*; pva *maţruuf*.

اتطرف *ſiţţaraf* or *ſiţţaraf* /vi/ passive of *ţaraf*[3]. - iva *miţţirif*.

انطرف *ſinţaraf* = *ſiţţaraf*. - iva *minţirif*.

ط ر ق

طرق *ţaraq*↑ *(u)* /vt/ to knock, strike, pound, hammer. *miin bi-yuţruq il-baab is-saɛaa-di* who is knocking at the door at this hour? - vn *ţarq*; ava *ţaariq*; pva *maţruuq*.

طرقة *ţarqa* /inst n, pl *-aat*/ a knock.

طرقة *ţurqa* /n pl *ţuraq, ţurqaat*/ corridor, passage. *ḅarra ţ-ţurqa [naut]* off course.

طريق *ţariiq* /masc and fem n, pl *ţuruq, ţuruqaat*/ **1** road. *ţariiq ɛumuumi* a main road. *ţariiq maṣr iskindiriyya* the Cairo-Alexandria road. **2** route, way. *ɣayyar ţariiq-u* he altered his course. *ɛarraf-u ţariiq kinz*[i] *fil-ſarḍ* he told him the way to a buried treasure. *geena ɛan ţariiq is-suuq* we came via the market. *ſil-ɛadwa b-tiigi ɛan ţariiq il-ſakl* the infection is carried through food. *biţ-ţariiq ir-rasmi* through official channels. ‖*ſaaxir ţariiq-ak feen* what are you driving at?

طريقة *ţariiqa, ţariiqa* /n pl *ţuruq*/ **1** way, procedure, method. *ſiţ-ţuruq id-difaɛiyya* defence tactics. *bi-ſayy*[i] *ţariiqa* (1) by any means. (2) by what means? *di miſ ţariiqa di* that's no way to do things! **2** Sufi Order, Sufi

brotherhood. *kull ʿ ʃeex wi-lu ʈariiqa [prov]* ≈ everyone has his own way of doing things.
مطرقة *maʈraqa* /n pl *maʈaariq*/ any one-handed hammer with a blunt head (such as a sledge hammer or a farrier's rounding hammer).
اتطرق *ʔiʈʈaraq* or *ʔiʈʈaraq* /vi/ to be knocked, struck, pounded or hammered. - iva *miʈʈiriq*.
طرّق *ʈarraq* /vt/ **1** to forge (metal). *ʔil-ħaddaad bi-yʈarraq il-faas* the blacksmith forges the mattock. **2** to show (s.o.) the way out. - vn *taʈriiq*; ava/pva *miʈarraq*.
اتطرّق *ʔiʈʈarraq* or *ʔiʈʈarraq* /vi/ **1** to be forged (of metal). **2** to be shown the way out. **3** to push off, shove off. *ʔiʈʈarraq* get lost! - ava/iva *miʈʈarraq*.

ط ر ق ع
طرقع *ʈarqaʕ* **1** /vt/ to cause to make a cracking sound. *ʈarqaʕ ʂawabʕ-u* he cracked his knuckles. *ʈarqaʕ il-kurbaag* he cracked the whip. — /vi/ **2** to crack, make a cracking, clicking or banging sound. **3** to burst (of a tyre etc.). ‖*baqeet ħ-aʈarqaʕ min il-ɤeeʒ* I was about to explode with anger. - vn *ʈarqaʕa*; ava/pva *miʈarqaʕ*.
طرقيعة *ʈurqeeʕa* /n pl *-aat*/ child's toy clicker, (loosely also) any plaything that cracks.
اتطرقع *ʔiʈʈarqaʕ* or *ʔiʈʈarqaʕ* /vi/ to be cracked. - iva *miʈʈarqaʕ*.

ط ر ل م
طرلم *ʈaralam* onomatopoeia for the sound of music ≈ tra-la-la. - also *taralam*.

ط ر ل ى
طورلى *ʈurli* <T *türlü*> /n/ mixed vegetables stewed in sauce. - also *turli, tulli*.

ط ر م [1]
طرم *ʈirim (a)* /vi/ to lose one's (front) teeth.
طرم *ʈaram (u)* /vt/ **1** to cause (s.o.) the loss of his (front) teeth. **2** to thrust, jab. *ʈaramit ʂubaʕ-ha f-ʕeen-i* she poked her finger in my eye. - vn *ʈarm, ʈaramaan*; ava *ʈaarim*; pva *maʈruum*.
أطرم *ʔaʈram* /adj, fem *ʈarma*, pl *ʈurm*/ having no front teeth.
انطرم *ʔinʈaram* = *ʔiʈʈaram*. - iva *minʈirim*.
طرّم *ʈarram* /vt/ to knock out (teeth). - vn *taʈriim*; ava/pva *miʈarram*.
اتطرّم *ʔiʈʈarram* or *ʔiʈʈarram* /vi/ to be knocked out (of teeth). - iva *miʈʈarram*.

ط ر م [2]
طارمة *ʈarma* /n pl *-aat/ [naut]* quarters for crew aft in a Nile sailing boat.

ط ر م ب
طرمبة *ʈurumba* <It *tromba*> /n pl *-aat*/ pump. ‖*ʈurumbit baab* hydraulic door-operating device. - *ʈurumba kawiʃ* rubber drain plunger. - *ʈurumba mariina [naut]* voice-pipe. - also *turumba, ʈulumba*.

ط ر م ب – [1]
طرمبيطة *ʈurumbeeʈa* <T *trampete*> /n pl *-aat/ [mil]* side drum. - also *turumbeeʈa*.
طرمبيطجى *ʈurumbeʈgi* /n pl *-yya/ [mil]* side drummer. - also *turumbeʈgi*.

ط ر م ب – [2] see ء ت ر م : *ʈurumbiil*

ط ر م خ
طرمخ *ʈarmax* /vt/ to do in a slapdash manner. - vn *ʈarmaxa*; ava/pva *miʈarmax*.
اتطرمخ *ʔiʈʈarmax* or *ʔiʈʈarmax* /vi/ to be done in a slapdash manner. - iva *miʈʈarmax*.

ط ر ن ا ط
طرناطة *ʈurnaaʈa, ʈurunaaʈa* (also *ʈurneeʈa*) <It *tonnellata*> /n pl *ʈaraniiʈ*/ (metric) ton, tonne. ‖*ʔil-fuluus biʈ-ʈurnaaʈa* money is plentiful.

ط ر ن ش
طرانش *ʈaranʃ* <Fr *tranche*> /n pl *-aat*/ **1** slice. **2** *[elec]* channel made in a wall for the installation of wiring.

ط ر ن ط see ط ر ن ا ط : *ʈurnaaʈa, ʈurunaaʈa, ʈurneeʈa*

ط ر ن ى ط see ط ر ن ا ط : *ʈurneeʈa*

ط ر و see ط ر ى [1] : *ʈaraawa*

ط ر ى [1]
طرى *ʈiri, ʈuri (a)* /vi/ **1** to become soft or pliant. **2** to become cool or refreshing (of weather). **3** to lose sharpness (of a blade). - vn *ʈaraawa*.
طراوة *ʈaraawa* **1** /vn/ ‖*ħagar ʈaraawa* (1) whetstone. (2) grindstone (for marble, alabaster etc.). — /n/ **2** coolness, cool weather. ‖*xad ʈaraawa* he caught a chill. - *ma-mʕaa-ʃ iʈ-ʈaraawa [non-Cairene]* he's penniless. - *xallii-k fiʈ-ʈaraawa* forget about it! **3** softness.

ʕiid-u fiiha ʈaraawa he has fleshy hands.

طرى *ʈari* /adj pl *ʈuraay, ʈiraay*/ **1** soft, flexible. *kawitʃ[i] ʈari* flexible rubber. *mubilyaat ʈariyya* soft-upholstered furniture. ‖*ɛaḍm-u ʈari* he's a softie, he's still wet behind the ears. **2a** fresh and tender. *ɛeef ʈari* fresh bread. *garḥ[i] ʈari* fresh wound. **2b** fresh and succulent. *figl[i] ʈari* fresh and juicy radishes. **2c** unripe, green. *xaʃab ʈari* unseasoned wood. **3** cool, refreshing. *nisma ʈariyya* a refreshing breeze. **4** moist, damp. *ʕil-ʁasiil lissa ʈari* the laundry is still damp. *buuya ʈariyya* wet paint.

أطرى *ʔaʈra* /el/ **1** more/most soft. **2** more/most fresh or tender. **3** more/most cool or refreshing. **4** more/most moist or damp.

طرّى *ʈarra* /vt/ **1** to soften, make pliant. **2** to dampen, moisten. *niʈarri ʃwayyit raml* we moisten a little sand. *ʈarra riiq-u b-faay* he wet his whistle with tea. **3** to cool, make fresh. *ma-tḥuṭṭ il-baṭṭiixa fit-tallaaga tʈarrii-ha* put the water-melon in the refrigerator to chill it. ‖*ʈarra (ɛala) l-qalb* to soothe, refresh (s.o.), as in *niʈarri ɛala qalb-i-na b-ḥaaga saqɛa* let's cool off with a cold drink. — /vi/ **4** to become cool or fresh (of weather). - vn *taʈriyya*; ava/pva *miʈarri*.

اتطرّى *ʕiʈʈarra* or *ʕiʈʈarra* /vi/ passive of *ʈarra*. - iva *miʈʈarri*.

استطرى *ʕistaʈra* /vt/ **1** to select for tenderness, coolness or softness. **2** to consider (too) tender, cool or soft. - ava *mistaʈri*.

ط ر ى ²

طورية *ʈurya* <Copt> /n pl *ʈawaari*/ kind of mattock, medium-sized *faas* (see Pl.D, 6).

ط ر ى ش

طريشة *ʈireeʃa, ʈureeʃa* /n/ horned viper.

ط ز ز

طزّ *ʈuzz* (also *ʈuẓẓ*) /interj/ so what! so who gives a damn! ‖*ʈuzz[i] fiiʃ* the hell with it! - *ʈuzz[i] fi-...* to hell with..., as in *ʈuzz[i] fiik* to hell with you! - *wala tiɛraf ʈuzz[i] min subḥaan allaah* ≈ she can't tell chalk from cheese.

ط ز ز ى ن

طزّينة *ʈuzziina, ʈazziina* <It *dozzina*> /n pl *-aat, ʈazaziin*/ dozen. *biṭ-ʈuzziina* by the dozen, in great quantity. - also *duzziina*.

ط س س

طسّ *ʈass* (also *ʈaṣṣ*) *(u)* /vt/ to smite, strike. *ʈass-i-ni muxalfa* he slapped a fine on me. *ʕil-hawa yʈuss-a-ha* the wind buffets it. *ʕin ʃa-lla yʈuss-ak turmaay* I hope you get run down by a tram! - vn *ʈass, ʈasasaan*; ava *ʈaasis*; pva *maʈsuus*.

طسّة *ʈassa* /n pl *-aat*/ instance noun of *ʈass*.

اتطسّ *ʕiʈʈass* or *ʕiʈʈass* (also *ʕiʈʈaṣṣ* or *ʕiʈʈaṣṣ*) /vi/ **1** to crash, smash. *ḥa-yiʈʈass[i] fil-ḥeeṭa* he'll smash into the wall! **2** to be smitten, be struck. *yiʈʈass[i] f-naẓar-u* may he be struck blind! *ʕiʈʈasseet fi-naẓar-ak* have you been blinded, have you lost all sense of discrimination? - ava/iva *miʈʈass*.

انطسّ *ʕinʈass* (also *ʕinʈaṣṣ*) = *ʕiʈʈass*. - ava/iva *minʈass*.

ط س ط س

طسطس *ʈasʈas* /vi/ to play music badly. *qaɛad yiʈasʈas wi-ynaffiz* he went on playing lousy music. - vn *ʈasʈasa*; ava *miʈasʈis*.

ط ش ت

طشت *ʈift* (also *ʈift*) <P *tasht*> **1** /n pl *ʈufuut, ʈifaat, ʕiʃfaaṭ, ʈufúta*/ large shallow metal or plastic basin used for laundry and bathing (see Pl.A, 9). *ʕiṭ-ʈift[i] qaal lil-mavrafa ya buuṣa ya mɛaṣɛaṣa [prov]* ≈ the pot called the kettle black. **2** oaf, dolt.

طشتيّة *ʈiftiyya* (also *ʈifʈiyya*) /n pl *-aat, ʈafaati*/ *[rur]* small deep metal basin.

ط ش ش

طشّ *ʈaff (u, i)* /vt/ **1** to cause (hot fat) to sizzle by the addition of liquid. *nuruuḥ ḥaṭṭiin fiwayyit diqiiq bis-samna wi-nʈuff-a-ha bil-laban* we put in a little flour with clarified butter and (after heating them together we add) milk so that it sizzles. **2** *[metal]* to temper by quenching. **3** *[rur]* to irrigate (land) prior to planting. **4** to rupture (the amniotic sac before birth). *ʕig-gamuusa ʈaffit il-qarn* ≈ the buffalo is about to deliver its calf. — /vi/ **5** to rupture (of the amniotic sac at birth). - vn *ʈaff, ʈafafaan*; ava *ʈaafif*; pva *maʃfuuf*.

طشاش *ʈafaaf* **1** /n/ dimness, blurredness. *miʃ faayif quddaami ɤeer ʈafaaf* all I can see in front of me is a blur. ‖*ʈafaaf kalaam* unfounded information, rumours. - *ʕiṭ-ʈafaaf wala l-ɛama [prov]* better weak-sighted than blind. **2** /adv/ dimly, sparsely. *bi-yfuuf ʈafaaf* he can see only dimly. ‖*b-aɛraf ʕingiliizi ʈafaaf* I have a smattering of English.

اتطشّ *ʕiʈʈaff* or *ʕiʈʈaff* /vi/ passive of *ʈaff*. - iva *miʈʈaff*.

ط ش ط see ط ش ت : *ʈift*

ط ش ط ش

طشطش *ʈaʃtaʃ* /vi/ to sizzle, splash (of hot oil, at the

addition of liquids). - vn *ṭaftafa*; ava *miṭaftaf*.

ط ص ص see ط س س : *ṭaṣṣ, ʔiṭṭaṣṣ, ʔinṭaṣṣ*

ط ص ل ق

طصلق *ṭaṣlaq* <T *taslak*> /vt/ to carry out (work) in a hasty slapdash manner. - also *ṭalṣaq*. - vn *ṭaṣlaqa*; ava/pva *miṭaṣlaq*.

اتطصلق *ʔiṭṭaṣlaq* or *ʔiṭṭaṣlaq* /vi/ to be done in a hasty slapdash manner. - iva *miṭṭaṣlaq*.

ط ط و ر

ططورة *ṭaṭuura* /coll n/ *[bot]* datura. - also *datuura, dahtuura, tatuura*.

ط ط ى

طاطا *ṭaaṭa* (also *ṭaʔṭaʔ*) **1** /vt/ to bow or lower (one's head). **2** /vi/ to bow to circumstances. *ṭaṭi-lha tfuut [prov]* acquiesce in (evil) circumstances and they will pass. - vn *miṭaṭiyya*; ava/pva *miṭaaṭi*.

ط ظ ظ see ط ز ز : *ṭuẓẓ*

ط ع م

طعم *ṭaʕam (i)* /vt/ **1** to make tasty or flavoursome. *ḥuṭṭi l-kammuun ʕal-xuḍaar ʕafaan yiṭʕim-u* put some cumin in the vegetables to give them taste. **2** *[frozen contexts]* to feed. *ʔiṭʕim il-fumm' tistiḥi l-ʕeen [prov]* give and you'll get results. *ʔiṭʕim maṭʕuum wala tiṭʕim-f' maḥruum [prov]* help the one who once saw better days (because he feels deprivation more) rather than one who has always been poor. **3** *[hort]* to graft. - vn *ṭaʕm, ṭaʕamaan*; ava *ṭaaʕim*; pva *maṭʕuum*.

طعم *ṭaʕm* /n/ **1** taste, flavour. ‖*kalaam ma-lu-ʃ ṭaʕm* uninspiring talk. **2** *[hort]* graft.

طعميّة *ṭaʕmiyya* /coll n/ common dish consisting of dried broad beans soaked and pounded together with herbs and spices, shaped into balls and deep fried in oil. *ṭaʕmiyya mafruuda* disc-shaped *ṭaʕmiyya*. *ṭaʕmiyya ʠammaaṭi* finger-shaped *ṭaʕmiyya*. *ṭaʕmiyya maḥʃiyya* a sort of *ṭaʕmiyya* stuffed with onion and parsley.

طعمجى *ṭaʕmagi* /n pl *-yya*/ maker of *ṭaʕmiyya*.

طعم *ṭuʕm* /coll n/ **1** bait. **2** *[hort]* graft(s). *maṭwit ṭuʕm* grafting knife. **3** vaccine.

طعمة *ṭuʕma* /unit n, pl *-aat*/ **1** piece of bait. **2** *[hort]* a graft.

طعماية *ṭuʕmaaya* = *ṭuʕma*.

طعم *ṭiʕim* /adj */ **1** tasty, flavour-some. **2** cute, sweet.

أطعم *ʔaṭʕam¹* /el/ **1** more/most tasty or flavoursome. **2** more/most cute or sweet.

طعام *ṭaʕaam* /n pl *ʔaṭʕima*/ food. *ʃirkit il-ʔaṭʕima l-maḥfuuẓa* the canned-foods company.

مطعم *maṭʕam* /n pl *maṭaaʕim*/ **1** restaurant. **2** refectory.

مطعمجى *maṭʕamgi↓* /n pl *-yya*/ restaurant owner.

طعّم *ṭaʕʕam* /vt/ **1** to inoculate, vaccinate. **2** to inlay. ‖*ṭaʕʕiim il-kalaam* studding one's speech (with attractive verbal devices). **3** *[hort]* to graft. *ṭaʕʕiim ʕeen* shield-budding. - vn *ṭaʕʕiim*; ava/pva *miṭaʕʕam*.

اتطعّم *ʔiṭṭaʕʕam* or *ʔiṭṭaʕʕam* /vi/ **1** to be inoculated, be vaccinated. **2** to be inlaid. **3** to be grafted. - iva *miṭṭaʕʕam*.

أطعم *ʔaṭʕam²↑* /vt/ to feed, give to eat. *ʔiṭʕaam il-fuʠara f-ramaḍaan ḥalaal* it's good to feed the poor in Ramadan. - vn *ʔiṭʕaam*; ava *miṭʕim, muṭʕim*.

استطعم *ʔistaṭʕam* /vt/ **1** to find tasty, savour (food). **2** to detect the taste of. *ʔana mistaṭʕam malḥ' fil-ʔakl* I can taste salt in the food. - vn *ʔistiṭʕaam*; ava *mistaṭʕam*.

ط ع ن

طعن *ṭaʕan (a)* /vt/ **1a** to stab. **1b** to defame, cast aspersions on. *ṭaʕanit-ni f-ʃaraf-i* she has wounded my honour. **2** *[leg]* to contest (a sentence). - vn *ṭaʕn*; ava *ṭaaʕin*; pva *maṭʕuun*.

طعن *ṭaʕn* /n pl *ṭuʕuun*/ *[leg]* appeal.

طعنة *ṭaʕna* /inst n, pl *-aat*/ **1** a stab, a thrust with a knife. **2** an act of defamation.

طاعون *ṭaʕuun* /n/ plague, pestilence.

اتطعن *ʔiṭṭaʕan* or *ʔiṭṭaʕan* /vi/ passive of *ṭaʕan*. - iva *miṭṭiʕin*.

ط غ ر

طغرة *ṭuɣra* /n pl *-aat*/ **1** monogram of the Ottoman Sultan. **2** calligraphically intricate monogram in the style of that of the Ottoman Sultans. - also *ṭurra*.

طغراء *ṭuɣaraaʔ↑* = *ṭuɣra*.

ط غ ى

طغى *ṭaɣa (a, i)* /vi/ **1** to have dominance, predominate. *ʔil-manṭiqa di bi-yiṭɣa ʕaleeha ṭ-ṭaabiʕ il-yunaani* this area has a predominantly Greek stamp. **2** to behave domineeringly, play the despot. *hiyya b-tiṭɣa ʕala ʔaxuu-ha ṣ-ṣuɣayyar* she dominates her little brother. - vn *ṭaɣayaan*; ava *ṭaaɣi*.

طاغية *ṭaɣya* /n pl *ṭuɣaah*/ despot, tyrant.

طغيان *ṭuɣyaan* /n/ despotism, tyranny.

اتطغى *ʔiṭṭaɣa* or *ʔiṭṭaɣa* /vi/ (impersonal) passive of *ṭaɣa*. *ʔana miʃ min illi b-yiṭṭiɣi ʕaleehum* I'm not the sort to be bossed around. - iva *miṭṭiɣi*.

ط ف ء see ط ف ی

ط ف ح
طفح *ṭafaḥ (a)* /vi/ **1** to overflow, spill over. *ʕaḥyaanan il-magaari ṭiṭfaḥ* sometimes the sewers overflow. ‖*gild-u ṭafaḥ* his skin erupted (in a rash). — /vt/ **2** to vomit, bring up. ‖*ṭafaḥ ik-kuuta* (or *ʕid-damm*) he worked himself to exhaustion. **3** *[abus]* to eat. *ʕiṭfaḥ* eat! (and I hope you choke). - vn *ṭafḥ, ṭafaḥaan*; ava *ṭaafiḥ, ṭafḥaan*; pva *maṭfuuḥ*.
طفح *ṭafḥ* /n/ *[path]* rash.
طفّح *ṭaffaḥ* /vt/ **1** to cause to overflow. **2** to cause to vomit. ‖*ḥ-aṭaffaḥ-ak ik-kuuta* I'll make you sweat blood! **3** to force to eat. ‖*ḥ-aṭaffaḥ-ak is-simm* ≈ I'll make life hell for you! - vn *taṭfiiḥ*; ava/pva *miṭaffaḥ*.
اتطفّح *ʕiṭṭaffaḥ* or *ʕiṭṭaffaḥ* /vi/ passive of *ṭaffaḥ*. - iva *miṭṭaffaḥ*.

ط ف ر ¹
طفر *ṭafar¹ (u)* /vi/ to jump, rise suddenly. *ʕil-ʕasɛaar ṭafarit bi-fakl⁽ⁱ⁾ ʏariib* prices jumped up amazingly. - vn *ṭafaraan*; ava *ṭaafir*.
طفرة *ṭafra* /n pl *-aat*/ a leap, a jump.

ط ف ر ²
طفر *ṭafar²* /n pl *ʕaṭfaar*/ crupper, rump (of a horse).

ط ف س
طفس *ṭifis* /adj */ **1** greedy, gluttonous. **2** unpleasant, horrible. *ʕil-ɛaya ṭ-ṭifis lii ʕid-dawa n-nigis [prov]* a nasty disease requires a foul medicine.
أطفس *ʔaṭfas* /el/ **1** more/most greedy or gluttonous. **2** more/most unpleasant.
طفاسة *ṭafaasa* /n/ **1** greediness, gluttony. **2** unpleasantness.
اتطافس *ʕiṭṭaafis* or *ʕiṭṭaafis* /vi/ to behave in a nasty way, act unpleasantly. - ava *miṭṭaafis*.

ط ف ش
طفش *ṭifiʃ, ṭafaʃ (a)* /vi/ to run away, flee. *ṭiffit min goz-ha* she ran away from her husband. *da-na ɛawza ʕaṭfaʃ min xilaq-kum* I'd like to get away from your ugly mugs! - vn *ṭafaʃaan*; ava *ṭaafiʃ, ṭaffaan*.
طفّاشة *ṭaffaaʃa* /n pl *-aat*/ picklock, tool for forcing a lock.
طفّش *ṭaffiʃ* /vt/ **1** to cause to flee, drive away. *ʃakl⁽ⁱ⁾ yṭaffiʃ* a repellent face. **2** to force open (a lock). - vn *taṭfiiʃ*; ava *miṭaffiʃ*.
اتطفّش *ʕiṭṭaffiʃ* or *ʕiṭṭaffiʃ* /vi/ **1** to be caused to flee. **2** to be picked (of a lock). - iva *miṭṭaffiʃ*.

ط ف ط ف
طفطف *ṭaftaf* /n pl *ṭafaaṭiʃ*/ open-sided bus, often horse-drawn, used in resorts.

ط ف ف ¹
طفّ *ṭaff (u)* /vi/ to gush out. *ʕil-mayya ṭaffit mil-magaari* water burst out from the drains. - vn *ṭaff, ṭafafaan*; ava *ṭaafif*.
طفّة *ṭaffa¹* /n pl *-aat, ṭufaf*/ instance noun of *ṭaff*.

ط ف ف (²)
طفّة *ṭaffa²* /n pl *-aat*/ group (usually as part of a procession). *faatu ɛaleena ṭaffa wara ṭaffa* they passed by us group after group. - also *ḍaffa*.
طفّة *ṭaffa³* /n/ double number (e.g., in dice or dominoes). - also *ḍaffa*.
طفيف *ṭafiif↑* /adj/ trivial, inconsiderable, trifling.

ط ف ل ¹
طفل *ṭifl* /n pl *ʕaṭfaal*/ baby (boy), infant, child. *ʕaṭfaal il-madaaris* school-children. *ʕil-ʕaṭfaal ʕaḥbaab allaah [prov]* (children are the beloved of God) ≈ children are innocent.
طفلة *ṭifla* /n pl *ʕaṭfaal*/ baby girl, little girl.
طفولة *ṭufuula* /n/ infancy, childhood.

ط ف ل ²
طفيلي *ṭufeeli* /n pl *-yya*/ sponger.
طفيلي *ṭufayli↑* /adj/ parasitical.
طفيليّات *ṭufayliyyaat* /pl n/ parasites.
اتطفّل *ʕiṭṭaffal* or *ʕiṭṭaffal* /vi/ to sponge, impose oneself. - vn *taṭafful*; ava *miṭṭaffal, muṭaṭaffil*.

ط ف ل ³
طفل *ṭafl* /n/ clay, especially potter's clay.
طفلة *ṭafla* = *ṭafl*.
طفّل *ṭaffil* /vi/ to harden (of land with a surface of silt). - vn *taṭfiil*; ava *miṭaffil*.

ط ف و
طفا *ṭafa¹↑ (u)* /vi/ to float, be buoyant. - vn *ṭafw*; ava *ṭaafi*.

ط ف ی
طفى *ṭafa² (i)* /vt/ **1** to extinguish, put out, turn off (fire, light, radio etc.). *ʕiṭfi n-nuur* turn off the light. **2** to render dull, lustreless or muted, give a matt finish to. *loon maṭfi* muted colour. **3a** to irrigate, water (parched ground). **3b** to hydrate. *giir maṭfi* slaked lime. **3c** to quench (hot metal). — /vi/ **4** to go out, become dead (of

a fire, light, engine etc.). - vn *ṭafy, ṭafayaan*; ava *ṭaafi*; pva *maṭfi*.

طفية *ṭafya*[1] /pl *-aat*/ **1** instance noun of *ṭafy*. **2** (also *ṭafyit sigaara*) cigarette ash.

طفّاية *ṭaffaaya* /n pl *-aat*/ **1** fire-extinguisher. **2** ashtray.

مطافى *maṭaafi* /pl n/ fire department, fire-brigade. *ɛaskari maṭaafi* fireman. *ɛarabiyyaat maṭaafi* fire-engines.

اتطفى *ʔiṭṭafa* or *ʔiṭṭafa* /vi/ passive of *ṭafa*[2]. - iva *miṭṭifi*.

انطفى *ʔinṭafa* = *ʔiṭṭafa*. - iva *minṭifi*.

طفّى *ṭaffa*[4] = *ṭafa*[2]. - vn *taṭfiyya*; ava/pva *miṭaffi*.

اتطفّى *ʔiṭṭaffa* or *ʔiṭṭaffa* = *ʔiṭṭafa*. - iva *miṭṭaffi*.

إطفاء *ʔiṭfaaʕ*↑ /n/ fire-fighting. *ʔidaarit il-ʔiṭfaaʕ* or *ɢism il-ʔiṭfaaʕ* fire department, fire-brigade. *ɛarabiyyit il-ʔiṭfaaʕ* fire-engine.

ط ف ى ا

طافيا *ṭafya*[2] /n/ mixed dregs of alcohol, particularly methylated spirits (drunk by down-and-outs etc.).

ط ق س [1]

طقس *ṭaqs, ṭaqs*↑ <Gr *taksis*> /n/ **1** weather, climate. **2** /pl *ṭuquus, ṭuquus*/ rite, ritual. ‖*nafs iṭ-ṭaqs' huwwa huwwa* it's the same thing all over again.

طقسى *ṭaqsi, ṭaqsi*↑ /adj/ ritual, liturgical.

طقّس *ṭaqqas*[1] /vt/ *[Chr]* to ordain according to prescribed ritual. *ṭaqqasu l-baṭrak* they enthroned the patriarch according to the ritual. - vn *taṭqiis*; ava/pva *miṭaqqas*.

اتطقّس *ʔiṭṭaqqas* or *ʔiṭṭaqqas* /vi/ passive of *ṭaqqas*[1]. - iva *miṭṭaqqas*.

ط ق س [2]

طقّس *ṭaqqas*[2] /vi/ to make a thorough search, search everywhere. *ṭaqqas fiṣ-ṣaqqa ɛala naḍḍart-u* he searched the whole flat for his glasses. - vn *taṭqiis*; ava/pva *miṭaqqas*.

ط ق س [3] see ط ق ق ى س : *ṭuqqeesi*

ط ق ش

طقش *ṭaqaf (u)* /vt/ to hit (s.th. against s.th. else). *ṭaqaf rus-hum fi-baɛḍ* he cracked their heads together. - vn *ṭaqṣ, ṭaqṣafaan*; ava *ṭaaqiṣ*; pva *maṭquuf*.

طقاش *ṭiqaaf* /n/ quarterstaff fencing.

اتطقش *ʔiṭṭaqaf* or *ʔiṭṭaqaf* /vi/ passive of *ṭaqaf*. - iva *miṭṭiqif*.

طقّش *ṭaqqaf* /vt/ **1** = *ṭaqaf*. **2** to break, smash (e.g., eggs, melons). *ṭaqqafii-li beḍteen fiz-zibda* fry me a couple of eggs in butter. ‖*ɛeen-u mṭaqqaʃa* his eye is puffy and red. - vn *taṭqiif*; ava/pva *miṭaqqaf*.

اتطقّش *ʔiṭṭaqqaf* or *ʔiṭṭaqqaf* /vi/ passive of *ṭaqqaf*. - iva *miṭṭaqqaf*.

ط ق ط ق

طقطق *ṭaqṭaq*[1] /vt/ **1a** to cause to make a clicking or cracking sound. *ṭaqṭaq ṣawabɛ-u* he cracked his knuckles. ‖*ɢaaɛid yiṭaqṭaq ṣawaabiɛ riglee* he's sitting around twiddling his thumbs. **1b** to cause to crack. *ʔil-ḥarr' bi-yṭaqṭaq il-ʔarḍ* the heat cracks the earth. **2** *[slang]* to make aware and alert, give polish to. *ʔil-waad da ɛaawiz fiwayyit ṭaqṭaɢa* that kid needs smartening up. ‖*ṭaqṭaq widaan-u* he pricked up his ears. — /vi/ **3** to make a cracking sound. *ʔil-buks' ṭaqṭaq fi-wiff-u* the punch exploded in his face. ‖*ɢalb-i bi-yṭaqṭaq* my heart is palpitating. - vn *ṭaqṭaɢa*; ava/pva *miṭaqṭaq*.

مطقطق *miṭaqṭaq* /pva/ ‖*ḥabl' mṭaqṭaq* a rope, some of the strands of which have snapped.

طقطق *ṭaqṭaq*[2]*: min ṭaqṭaq li-salaamu ɛaleekum* (I know) the whole story,

طقطوقة *ṭaqṭuuɢa* /n pl *ṭaɢaṭiiɢ*/ **1** ashtray. **2** small occasional table. **3** form of popular song consisting of couplets sung by a soloist alternating with a choral refrain. **4** a fart.

طقاطيق *ṭaɢaṭiiɢ* /pl n/: *min (taḥt') ṭaɢaṭiiɢ il-ʔarḍ* from the depths of the earth.

طقطيقة *ṭuqṭeeɢa* /n pl *-aat, ṭaɢaṭiiɢ*/ **1** child's toy clicker. **2** *[non-Cairene]* motor-cycle.

اتطقطق *ʔiṭṭaqṭaq* or *ʔiṭṭaqṭaq* /vi/ passive of *ṭaqṭaq*. - iva *miṭṭaqṭaq*.

ط ق ق [1]

طقّ *ṭaqq (u, a)* /vi/ **1** to burst, crack (open). *niḍiif ɛal-ʔasmant' raml" ɛaʃaan ma-yṭaqq'-ʃ* we add sand to the cement so that it won't crack. ‖*nafuux-ak ṭaqq* you're cracked, your mind has cracked. *-miskuu w-ɛamaluu-lu ṭaqq il-fils* they grabbed him and gave him a beating on the arse. **2** to crack, make a cracking noise. *ʔiṭ-ṭabanga ṭaqqit* the revolver went off with a crack. ‖*ṭaqqit mil-veeẓ* she exploded with anger. *-min barra ṭaqq' ṭaqq' w-min guwwa faaf wi-baqq [prov]* (outside rustling (of fine clothes), inside mites and bugs) ≈ all that glisters is not gold. -vn *ṭaqq, ṭaqaqaan*; ava *ṭaaqiq*.

طقّق *ṭaqqaq* /vt/ to cause to burst. ‖*ṭaqqaqit-ni* she drove me insane. - vn *taṭqiiq*; ava/pva *miṭaqqaq*.

اتطقّق *ʔiṭṭaqqaq* or *ʔiṭṭaqqaq* /vi/ passive of *ṭaqqaq*. - iva *miṭṭaqqaq*.

ط ق ق [2]
طقّة *ṭaqqa* /n pl *-aat*/ meal. *fi-kull[i] ṭaqqa ʕiḥmidu rabb-i-na* at every meal praise God.

ط ق ق ي س
طقّيسي *ṭuqqeesi* /n/ *[rur]* small window in a mud dwelling.

ط ق م
طقم *ṭaqam (u)* /vt and vi/ to take hold (particularly with the teeth). *ʕik-kalb[i] ṭaqam (fi-)rigl-i* the dog sank his teeth into my leg. - vn *ṭaqam, ṭaqamaan*; ava *ṭaaqim*; pva *maṭquum*.
طقم *ṭaqm* /n pl *ʕaṭqum, ʕuṭqum, ṭuqúma↓*/ **1** set of complementary things. *ṭaqm[i] sufra* dinner service. *ṭaqm[i] ʃaay* tea set. *ṭaqm[i] snaan* set of teeth. *ṭaqm[i] ḥmaar* donkey tack. **2** complementary group of people, team, troupe. *ṭaqm[i] il-markib* ship's crew. **3** litter (of young animals).
انطقم *ʕinṭaqam* /vi/ (impersonal) passive of *ṭaqam*. *ʕinṭaqam fi-rigl-u* he got his leg bitten. - iva *minṭiqim*.
طقّم *ṭaqqam* /vt/ **1** to fit out with a complete set of clothes. **2** *[naut]* to make up a crew. *markib miṭaqqama* ship with crew. **3** to enable to take hold of, put into the clutches of. *ṭaqqam-ni l-mablaʁ bass* just let me get my hands on the money. - vn *taṭqiim*; ava/pva *miṭaqqam*.
اتطقّم *ʕiṭṭaqqam* or *ʕiṭṭaqqam* /vi/ passive of *ṭaqqam*. - iva *miṭṭaqqam*.

ط ق ى see ط و ق [1] : *ṭaqiyya*

ط ل ب
طلب *ṭalab[1] (u)* /vt/ **1** to request, order. *ṭalabtu ʃaay walla qahwa* did you order tea or coffee? *da l-maṭluub* that's just the ticket! || *ʃana ḥ-aṭlub-huu-lak* I'll get him (on the phone) for you. **2** to demand. *ʕiṭ-ṭalab ʁaleehum fidiid* they are much in demand. **3** to request the hand of (s.o.) in marriage. || *ṭalabuu-ha tʁazzizit fatuu-ha tnaddimit [prov]* she coyly refused offers of marriage only to regret when marriage passed her by. **4** to require. *law il-ḥaraara zaadit ʁan il-maṭluub* if the temperature exceeds the required level. *bi-yuṭlubu ʃhaada* they require a certificate. **5** *[mil]* to call up, draft. - vn *ṭalab*; ava *ṭaalib*; pva *maṭluub*.
طلب *ṭalab[2]* /n pl *-aat/* **1a** request, order. *taḥt iṭ-ṭalab* (available) on demand. *ḥasab iṭ-ṭalab* (made) to order. || *ṭalabaat-ak* ≈ at your service. **1b** application. *ṭalab gawaaz (safar)* passport application. **2** demand. *qanuun il-ʁarḍ[i] wiṭ-ṭalab* the law of supply and demand. **3** requirement. *ṭalabaat il-beet* household necessities. || *raaḥ fi-ṭalab* he went on an errand.
طالب *ṭaalib[1]* /n pl *ṭullaab, ṭalaba/* (male) student. *beet iṭ-ṭalaba* students' hostel.
طالبة *ṭalba[1], ṭaaliba↑* **1** /n pl *-aat/* female student. **2** /fem adj/ in heat. *farasa ṭalba* a mare in heat.
طلبة *ṭalba[2]* /n pl *ṭalabaat/ [Chr]* supplication, litany.
مطلوبات *maṭlubaat↑* /pl n/ requirements.
طلبة *ṭulba* /n/ *[mil]* fatigue duty.
طلبيّة *ṭalabiyya* /n pl *-aat, -aat/* order, requisition, commission. *xad ṭalabiyyaat farf* he took orders for furniture.
اتطلب *ʕiṭṭalab* or *ʕiṭṭalab* /vi/ passive of *ṭalab*. - iva *miṭṭilib*.
انطلب *ʕinṭalab* = *ʕiṭṭalab*. - iva *minṭilib*.
اتطلّب *ʕiṭṭallab* or *ʕiṭṭallab* /vt/ to require, necessitate. - vn *taṭallub*; ava *mutaṭallib↑*; pva *mutaṭallab↑*.
متطلّبات *mutaṭallabaat↑, mutaṭallabaat↑* /pl n/ requirements.
طالب *ṭaalib[2]* /vt/ to make a demand of (s.o.), make a claim on (s.o.). *ʕil-ʁummaal bi-yṭalbu f-firka b-ḥuquq-hum* the workers are demanding their rights from the company. *ʕin-niyaaba bi-ṭṭaalib bi-ʕafadd[a] ʁuquuba* the prosecution is calling for the heaviest penalty. - vn *miṭalba, muṭalba*; ava *miṭaalib*; pva *muṭaalab*.
اتطالب *ʕiṭṭaalib* or *ʕiṭṭaalib* /vi/ passive of *ṭaalib[2]*. - iva *miṭṭaalib*.

ط ل ح
طلح *ṭalḥ* /n/ acacia.

ط ل س [1]
طلس *ṭalas (u, i)* /vi/ to close over or stop up (an aperture) with mud or the like. *ṭalasit ʁala buqq il-ballaaṣ wi-sabít-u lamma l-miff[i] daar* she stopped up the mouth of the pot (with mud) and left it till the *miff* had aged. - vn *ṭals*; ava *ṭaalis*; ava *maṭluus*.
اتطلس *ʕiṭṭalas* or *ʕiṭṭalas* /vi/ (impersonal) passive of *ṭalas*. *yiṭṭilis ʁalee b-ḥittit ṭiina* it is covered over with a lump of mud. - iva *miṭṭilis*.

ط ل س [2] see ط ى ل س : *ṭaylasaan*

ط ل س م [1]
طلسم *ṭalsim* **1** /vt/ to jam, make unworkable. **2** /vi/ to jam fast. *ʕil-baab ṭalsim* the door jammed. *muxx-i miṭalsim* my mind has seized up (usually from exhaustion). - vn *ṭalsama*; ava/pva *miṭalsim*.
اتطلسم *ʕiṭṭalsim* or *ʕiṭṭalsim* /vi/ to be or become jammed or unworkable. - ava/iva *miṭṭalsim*.

ط ل س م [2]
طلسم *ṭalsam* **1** /n pl *ṭalaasim*/ talisman, charm. **2** *ṭalaasim* /pl n/ cryptic symbols.

ط ل ص ق
طلصق *ṭalṣaq* /vt/ to carry out (work) in a hasty slapdash manner. - also *ṭaṣlaq*. - vn *ṭalṣaqa*; ava/pva *miṭalṣaq*.
اتطلصق *ʔiṭṭalṣaq* or *ʔiṭṭalṣaq* /vi/ to be done in a hasty slapdash manner. - iva *miṭṭalṣaq*.

ط ل ط م ى س
طلطميس *ṭalṭamiis* /n/ *[magic]* formulaic word uttered in calling up spirits.

ط ل ع
طلع *ṭiliʕ, ṭalaʕ (a)* /vi/ **1** to proceed, come or go forth. *ṭiliʕna riḥla* we went off on a trip. *yalla niṭlaʕ (ʕala) il-haram* let's go to the Pyramids! *ʔil-ḥaramiyya ṭilʕu ʕalayya* the thieves came at me. *ʃaariʕ ṭaaliʕ min il-midaan* a street leading off the square. *ṭiliʕ yigri* he set off at a run. **2** to come out, go out, get out. *ḥa-yiṭlaʕ mis-sign' baʕd' sana* he'll get out of prison in a year's time. *ṭiliʕ min is-sabaq* he dropped out of the race. ‖ *ṭiliʕ min hiduum-u* ≈ he blew up (in, e.g., anger or exasperation). - *diin-u ṭiliʕ* or *ʕeen-u ṭilʕit* (1) he became thoroughly fed up. (2) he had a very hard time of it. - *rooḥ-u ṭilʕit* (1) he died. (2) he became exasperated. **3** to appear, emerge. *ʔil-ward' ṭiliʕ* the flowers began to bloom. *ʔil-baṭṭiix ṭiliʕ* water-melon has come into season. *ʔif-fams' ṭilʕit* (1) the sun rose. (2) the sun came out. *ʔimta n-natiiga ḥa-tiṭlaʕ* when will the result come out? *ʔir-ruxṣa ṭilʕit* the licence was issued. *ṭiliʕ bi-ḥigga gdiida* he's come up with a new excuse. ‖ *ṭaaliʕ fik-kaar* he's new to the trade. - *ʔiṭlaʕ biiha* out with it! **4** to come out, come off, come away. *ʔil-ʃukra ṭilʕit fi-ʔiid-i* the handle came away in my hand. *ʔil-ʕiʃra b-tiṭlaʕ min kutr ir-ruṭuuba* the veneer comes off because of excess damp. *ʔil-buʕaʕ ḥa-tiṭlaʕ bi-mayya suxna* the stains will come out with hot water. **5** to ascend, go up. *ʔiṭ-ṭayyaara ṭilʕit* (1) the plane took off. (2) the plane gained altitude. *ʔiṭlaʕ fooʕ is-suṭuuḥ* go up to the roof! *ḥa-niṭlaʕ bi-doreen kamaan* we'll add two more storeys. ‖ *la ṭiliʕ wala nizil* ≈ he doesn't amount to anything, he's a nobody. - *tiṭlaʕ is-sama tinzil il-ʔarḍ ...* ≈ whatever you do ..., as in *tiṭlaʕ is-sama tinzil il-ʔarḍ' miʃ mumkin ḥa-taxud-ha* whatever you do you'll never get it. - *ṭaaliʕ waakil naazil waakil (zayy il-munʃaar)* ≈ he doesn't miss a single opportunity. - *ʔil-fikra ṭilʕit fi-dmaaɣ-i* the idea appealed to me. **6a** to grow up (to be), become. *ṭiliʕt' min ṣuɣr-i mʕaqqad* I grew up with a complex. *ḥa-tiṭlaʕ ʕeeh lamma tikbar* what will you be when you grow up? **6b** to turn out (to be), prove (to be). *ṭiliʕ kazzaab* he proved to be a liar. *ṭiliʕ booʃ* it turned out a flop. *ṭiliʕ bi-kaam* how much did it cost in the end? *ʔilli maʕaaya ma-yiṭlaʕ-ʃ' ʕaʃara gneeh* what I have with me doesn't amount to ten pounds. ‖ *yiṭlaʕ* approximately, as in *maʕaaya yiṭlaʕ ʕaʃara gneeh* I have about ten pounds. — /vt/ **7a** to climb, ascend. *ṭiliʕ is-sillim* he climbed the stairs. **7b** to board, mount. *ṭiliʕt il-ʔutubiis* I boarded the bus. - vn *ṭuluuʕ*; ava *ṭaaliʕ, ṭalʕaan*; pva *maṭluuʕ*.
¶ *ṭiliʕ li-* to take after, as in *ʔibn-u ṭiliʕ-lu* his son took after him. — *ṭiliʕ ʕala* to suit, as in *ʔil-fustaan da ma-b-yiṭlaʕ-ʃ' ʕaleeha* that dress doesn't suit her. - *ṭiliʕ fi-* to take up, acquire as a habit, as in *ṭilʕit fi-ḥkaaya gdiida* she is up to something new, she took up a new (bad) habit, *ṭaaliʕ fiiha* he is putting on airs, *ṭiliʕ fi-maṭluuʕ taani* now he's up to something different.
طالع *ṭaaliʕ'* **1** /ava/ ‖ *wi-ṭaaliʕ* and upwards, and onwards, as in *min hina w-ṭaaliʕ* from now on, *ʕaʃar siniin wi-ṭaaliʕ* ten years and up. **2** /n pl *ṭawaaliʕ*/ horoscope.
مطلوع *maṭluuʕ* /n pl *maṭaliiʕ*/ craze, fad. *luhum maṭaliiʕ ɣariiba* they come up with crazy new ideas.
طلع *ṭalʕ* /n/ **1** *[text]* lapping of cotton hanks before weaving. **2a** pollen. **2b** inflorescence (of a palm tree).
طلعة *ṭalʕa* /n/ **1** appearance, emergence. *ṭalʕit iʃ-ʃams* sunrise. *ṭalʕit in-nahaar* daybreak. **2** sortie, expedition, outing. ‖ *badlit iṭ-ṭalʕa [mil]* dress uniform. **3** countenance. *geet bi-ṭalʕit-ak il-bahiyya [deris]* ≈ there you are in all your beauty. **4** funeral procession.
طليعة *ṭaliiʕa↑* /n pl *ṭalaayiʕ*/ vanguard.
طليعى *ṭaliiʕi* /adj */ avant-garde. ‖ *ʔit-tanẓiim iṭ-ṭaliiʕi [obsol]* secret organisation in the time of President Nasser charged with ascertaining and shaping opinions among the population.
مطلع *maṭlaʕ* /n pl *maṭaaliʕ*/ **1** upward slope. **2** first line of a poem or song. **3** overture.
مطلاع *miṭlaaʕ* /n pl *maṭaliiʕ*/ climbing strap with which a climber circles the palm tree and his waist.
طلّع *ṭallaʕ* /vt/ **1** to send out. *ṭallaʕuu-hum min il-balad* get them out of the country! **2** to take out, get out. *ṭallaʕ ʔiid-ak min geeb-ak* take your hand out of your pocket! *ṭallaʕt-i-lu sgaara* I proffered him a cigarette. ‖ *ḥ-aṭallaʕ ʕeen-u* (or *diin-u*, or *rooḥ-u*) I'll give him a very hard time. **3** to issue, release. *bi-yṭallaʕu l-magalla kull' ʔusbuuʕ* they publish the magazine every week. ‖ *ṭallaʕ ɣaḍab-u fiiha* he took out his anger on her. - *ṭallaʕ (kalaam) ʕala* to invent and spread (defamatory) rumours about (s.o.), as in *ṭallaʕ ʕaleena ʔinn iḥna gubana* he spread it around that we were cowards.

4 to produce. *ʕil-beeḍ ṭallaɛ katakiit* the eggs produced chicks. *ʕaḥsan ward*^{i} *yṭallaɛ riiḥa huwwa l-ward il-baladi* the flowers that produce the best scent are roses. **5** to detach, remove. *laazim tiṭallaɛ kull iṣ-ṣamɣ*^{i} *min ʕiid-ak* you have to get all the glue off your hands. **6** to acquire, obtain. *ṭallaɛ ruxṣa* he got a licence. *bi-ṭṭallaɛ kaam gineeh fif-ʃahr* how much money do you make in a month? **7** to take, bring or send up. *ṭallaɛit il-ɣasiil ɛala s-suṭuuḥ* she took the washing up to the roof. *bi-nṭallaɛ mayya min il-biir* we get water up from the well. **8** to turn (s.o. or s.th.) into. *ʃiib-u bass*^{i} *maɛaana w-ḥa-nṭallaɛ-huu-lak walad maẓbuuṭ* just leave him with us and we'll make a fine boy out of him. **9** to make (s.o. or s.th.) out (to be). *ṭallaɛuu-ni kaddaab* they made me out a liar. - vn *taṭliiɛ*; ava/pva *miṭallaɛ*.

اتطلّع *ʕiṭṭallaɛ* or *ʕiṭṭallaɛ* /vi/ **1** passive of *ṭallaɛ*. **2** to look. *bi-tiṭṭallaɛ li-ʕeeh* what are you looking at? **3** to aspire. *ʕana miʃ miṭṭallaɛ lit-tarqiyya* I don't aspire to promotion. - ava/iva *miṭṭallaɛ*.

طالع *ṭaaliɛ*^{2} /vt/ to peruse, study. *kutub muṭalɛa* (school) books (of selections from Arabic prose writers) for study. - vn *muṭalɛa*; ava *miṭaaliɛ*.

اطّلع *ʕiṭṭalaɛ* /vi/ **1** to be (well) informed, be knowledgeable. *ʕil-muḥaami laazim yiṭṭiliɛ kitiir wi-ytaabiɛ il-qanuun* a lawyer must be well-read and keep up (to date) with the law. **2** to refer (to written material). *ʕil-muwaẓẓaf bi-yiṭṭiliɛ ɛala l-mustanadaat* the employee consults the documents. - vn *ʕiṭṭilaaɛ*; ava *miṭṭiliɛ*.

مطّلع *muṭṭaliɛ* /adj */ well-informed, knowledgeable.

استطلع *ʕistaṭlaɛ* /vt/ **1**↑ to look into, scrutinize. *ḥa-nistaṭlaɛ il-mawḍuuɛ* we'll look into the matter. ‖*ḥubb il-istiṭlaaɛ* curiosity. **2** *[mil]* to make a reconnaissance of. *ʕistaṭlaɛu l-ʕahdaaf* they reconnoitred the targets. - vn *ʕistiṭlaaɛ*; ava *mistaṭlaɛ*.

ط ل ق

طلق *ṭalaq (i, u)* /vt/ **1a** to release, set loose. *ʕiṭliq il-kalb*^{a} *ɛalee* set the dog loose on him! *ṭalaqna l-bahaayim taakul il-ḥaʃiiʃ* we let the cattle out to eat the grass. *ʕiṭliq il-mayya fig-gineena* let the water flow into the garden. **1b** to discharge, fire (a projectile). **2** to mate with (of a male animal). - /vi/ **3** to have uterine contractions, have labour pains. - vn *ṭalq, ṭalaqaan*; ava *ṭaaliq*; pva *maṭluuq*.

طلق *ṭalq* **1** (also *ṭalq*) /adj/: *ʕil-hawa ṭ-ṭalq* the open air. **2** /coll n/ labour pains, uterine contractions.

طلقة *ṭalqa*^{1} /pl *-aat*/ **1** /inst n/ **1a** a uterine contraction (in childbirth). **1b** a shot. *ḍarab ṭalqa* he fired a shot. **1c** single declaration of divorce. **2** bullet, shell, projectile.

طالق *ṭaaliq* /fem adj */ divorced.

طالقة *ṭalqa*^{2} = *ṭaaliq*.

طلاق *ṭalaaq* /n/ divorce. *ʕiṭ-ṭalaaq bit-talaata [Isl]* irrevocable divorce.

طلوقة *ṭaluuqa* /n pl *-aat*/ stud animal.

طليق *ṭaliiq* **1** /n pl *ṭulaqa*/ ex-husband. **2** /adj */ free. *ḥurr*^{i} *ṭaliiq* as free as the wind.

طليقة *ṭaliiqa* /n w foll pron, pl *-aat*/ divorcee. *ṭaliqt-u* his ex-wife.

انطلق *ʕinṭalaq* /vi/ **1** to set off. *ʕinṭalaqt*^{i} *waraa* I went in pursuit of him. **2a** to release, be released. **2b** to be fired, be discharged (of a projectile). **2c** to be set loose for mating purposes (of a stud animal). - vn *ʕinṭilaaq*; ava/iva *minṭiliq*.

انطلاقة *ʕinṭilaaqa* /n pl *-aat*/ **1** instance noun of *ʕinṭilaaq*. **2** *[mech]* length of throw setting in machine-tools. **3** *[mech]* period of time in which a machine works on a particular setting.

انطلق *ʕiṭṭalaq* or *ʕiṭṭalaq* = *ʕinṭalaq*. - ava/iva *miṭṭiliq*.

طلّق *ṭallaq* /vt/ to divorce. - vn *taṭliiq*; ava/pva *miṭallaq*.

مطلّقة *muṭallaqa*↑ /n pl *-aat*/ divorcee.

اتطلّق *ʕiṭṭallaq* or *ʕiṭṭallaq* /vi/ to be divorced. - iva *miṭṭallaq*.

أطلق *ʕaṭlaq, ʕaṭlaq* /vt/ **1a** to release, set loose. **1b** to discharge, fire (a projectile). *waqf*^{i} *ʕiṭlaaq in-naar* cease-fire. **2** to give (a name). *ʕaṭlaqu ɛalee ʕism*^{i} *gdiid* they called him by a new name. - vn *ʕiṭlaaq, ʕiṭlaaq*; ava *miṭliq, muṭliq*; pva *muṭlaq, muṭlaq*.

إطلاق *ʕiṭlaaq* /vn/ ‖*ɛala l-ʕiṭlaaq* absolutely, at all (in negative contexts). *ma-ʃuft-uu-ʃ ɛala l-ʕiṭlaaq* I haven't seen him at all.

¶ *ʕiṭlaaqan*↑ /adv/ absolutely (not), (not) at all. *ma-b-niḥtag-uu-ʃ ʕiṭlaaqan* we don't need it at all. *ma-baɛat-ʃ*^{i} *gawabaat* - *ʕiṭlaaqan* 'Hasn't he sent any letters?' 'None at all.'

مطلق *muṭlaq*↑ /adj/ absolute. *ʕil-ḥukm il-muṭlaq* absolute rule. *ʕaɣlabiyya muṭlaqa* an absolute majority. ‖*ḥabs*^{i} *muṭlaq [leg]* detention for a period of unspecified length.

¶ *muṭlaqan*↑ (1) /adv always w neg/ (not) at all, absolutely (not). (2) /interj/ certainly not! absolutely not!

ط ل ل

طلّ *ṭall (u)* /vi/ **1** to project, protrude. *maḥfaẓt-u ṭalla min geeb-u* his wallet is sticking out of his pocket. **2a** to look (from an elevated position). *ṭallit min if-fibbaak* she looked out of the window. **2b** to command a view. *ʃoòḍit in-noom bi-ṭṭull*^{a} *ɛala l-gineena* the bedroom overlooks the garden. - vn *ṭall, ṭalalaan*; ava *ṭaalil*.

¶ *ʈall^{a} ɛala* to visit, drop in on (e.g., a sick person). *ɋabl' ma truuḥ il-ɤeeɛ tiʈull^{a} ɛala ʃumm-a-ha* before going to the field she drops in on her mother.
طلّة *ʈalla'* /inst n, pl *-aat*/ a look, a glance.
اتطلّ *ʃitʈall* or *ʃiʈʈall* /vi/ (impersonal) passive of *ʈall. bi-yiʈʈall^{a} ɛalee kull' saaɛa* someone looks in on him every hour. - iva *miʈʈall*.

ط ل م ب
طلمبة *ʈulumba* <It *tromba* cf also T *tulumba*> /n pl *-aat*/ pump. -also *turumba, ʈurumba*.
طلمبجى *ʈulumbagi* <T *tulumbacı*> /n pl *-yya*/ pump operator.

ط ل م س
طلمس *ʈalmas* /vi/ **1** to turn dark. *ʃid-dinya ʈalmasit* (1) the sky darkened. (2) everything turned black (to my eyes). **2** /vt/ to ruin, wreck. - vn *ʈalmasa*; ava/pva *miʈalmis*.
اتطلمس *ʃitʈalmas* or *ʃiʈʈalmas* /vi/ to be ruined, be wrecked. - iva *mitʈalmas*.

ط ل و ش
طالوش *ʈaluuf* /n pl *ʈawaliif*/ plasterer's hawk.

ط ل و ن
طالون *ʈaluun: ɛala ɋalb-a-ha li-ʈaluun* seeing it through to the bitter end.

ط ل ى
طلى *ʈala' (i)* /vt/ **1** to plate, overlay (metal). *ʃin-naḥaas maʈli b-dahab* the brass is gold-plated. **2**↑ to paint. - vn *ʈaly, ʈila, ʈalayaan*; ava *ʈaali*; pva *maʈli*.
طلاء *ʈila, ʈala²* /n/ metallic plating. ‖*ɛalee ʃiʈ-ʈala* (usually derisive) it stands out (in a group). *yaɛni-nta lli ɛaleek iʈ-ʈala* ≈ the kettle calls the pot black.
طلّاء *ʈalla²* /n pl *ʈallayiin*/ one who plates or overlays metal.
انطلى *ʃinʈala* /vi/ to be plated, be overlaid (of metal). - iva *minʈili*.
¶ *ʃinʈala ɛala* to take in, fool. *ma-ɛadit-ʃ' tinʈili ɛala ḥadd* it doesn't fool anyone any longer.
اتطلى *ʃitʈala* or *ʃiʈʈala* = *ʃinʈala*. - iva *mitʈili*.

ط ل ى ا ن
طليان *ʈalyaan* (also *talyaan*) <It> /coll n/ Italians.
طلياني *ʈalyaani, ʈulyaani* (also *talyaani*) /pl *ʈalayna, talayna*/ **1** /adj/ Italian. **2** /n/ an Italian. — /n, no pl/ **3** the Italian language.

ط م ا ط م
طماطم *ʈamaaʈim* /coll n/ tomato(es).
طماطمة *ʈamaʈma* /unit n, pl *-aat*/ a tomato.
طماطماية *ʈamaʈmaaya* = *ʈamaʈma*.

ط م ء ن see also ط م ن
اطمأنّ *ʃiʈmaʃann↑* /vi/ to gain peace of mind. - vn *ʃiʈmiʃnaan*; ava *muʈmaʃinn*.

ط م ب ا ك
طمباك *ʈumbaak* <perh Gr *toumpeki*> /n/ type of finely cut tobacco, wrapped in a broad leaf, for smoking in a *fiifa*. - also *tumbaak, timbaak*.

ط م ب ر see ط ن ب ر

ط م ب ش see ط ن ب و ش

ط م ح
طموح *ʈumuuḥ↑* /n/ ambition.

ط م ر
طمار *ʈumaar* <P *tîmâr*> /n pl *-aat*/ curry-comb.
طمّر *ʈammar* /vt/ to take care of, attend to (animals, especially horses). - vn *ʈaʈmiir*; ava/pva *miʈammar*.
اتطمّر *ʃitʈammar* or *ʃiʈʈammar* /vi/ to be taken care of, be attended to (of animals, especially horses). - iva *mitʈammar*.

ط م س
طمس *ʈamas (u)* /vt/ to efface, blot out. *ʈams il-ḥaɋiiɋa* the obliteration of the truth. - vn *ʈams, ʈamasaan*; ava *ʈaamis*; pva *maʈmuus*.
اتطمس *ʃitʈamas* or *ʃiʈʈamas* /vi/ to be effaced or blotted out. - iva *mitʈimis*.
انطمس *ʃinʈamas* = *ʃitʈamas*. - vn *ʃinʈimaas*; iva *minʈimis*.

ط م ش
طمش *ʈamaʃ* /n/ *[abus]* countenance. *dahya f-ʈamaʃ-u* to hell with his ugly mug!

ط م ط م see ط م ا ط م: *ʈamaaʈim, ʈamaʈma, ʈamaʈmaaya*

ط م ع
طمع *ʈimiɛ, ʈumuɛ (a)* /vi/ to become covetous or greedy. *ʃin ʈimiɛ niddii-lu xamsa gneeh taani* if he gets greedy we'll give him five pounds more. *ʃana ʈamɛaan*

fi-ɛarabiyya zayy' ɛarabiyt-u I covet a car like his. - vn *ṭamaɛ*; ava *ṭaamiɛ, ṭamɛaan*.

طمع *ṭamaɛ* /n/ greed. ‖ *ʔiṭ-ṭamaɛ yiqill' ma gamaɛ [prov]* ≈ covetousness profiteth little.

طمعة *ṭamɛa* /n/ greediness.

أطماع *ʔaṭmaaɛ↑* /pl n/ ambitions.

طمعانجي *ṭamɛangi* /n pl *-yya*/ covetous or greedy man. *ṭamɛangi banaa-lu beet falasangi sikin-lu fii [prov]* (a greedy man built a house and a bankrupt man lived in it for him) the rewards of greed are minimal.

طمّاع *ṭammaaɛ* /adj */ covetous; greedy.

طمّع *ṭammaɛ* /vt/ **1** to cause to become covetous or greedy. *miraat-u ṭammaɛit-u f-faqqa kbiira* his wife made him covet a big apartment. **2** to encourage to take advantage. *ʔinta lli ṭammaɛt-u fiik* it is you who caused him to try to make use of you. - vn *ṭaṭmiiɛ*; ava/pva *miṭammaɛ*.

اتطمّع *ʔiṭṭammaɛ* or *ʔiṭṭammaɛ* /vi/ passive of *ṭammaɛ*. - iva *miṭṭammaɛ*.

ط م م

طمّ *ṭamm (u)* /vi/ to be overwhelming (of a disaster). - vn *ṭamm*; ava *ṭaamim*.

طامّة *ṭamma'* /n pl *-aat*/ (overwhelming) calamity.

طمّة *ṭamma²: ɛala ṭammit ɛeen-u* (full) to the brim. - also *tamma*.

اتطمّ *ʔiṭṭamm* or *ʔiṭṭamm* = *ṭamm*. - ava *miṭṭamm*.

ط م ن see also ط م ء ن

طمّن *ṭammin* /vt/ to reassure, set (someone's) mind at rest. *ya rabb' ṭammin-ni ɛalee* Lord, set my mind at rest about him! - vn *ṭaṭmiin*; ava/pva *miṭammin*.

اتطمّن *ʔiṭṭammin* or *ʔiṭṭammin* /vi/ to be reassured, have one's mind set at rest. *ʔiṭṭamminu ɛaf-faqqa* set your minds at rest about the flat. *ʔana miṭṭammin-lu* I feel comfortable about him, I have no qualms about him. - iva *miṭṭammin*.

اسطمّن *ʔisṭimann↓* /vi/ to feel reassured. - ava *misṭiminn*.

ط م ى

طمى *ṭamy* <Copt> /n/ silt, alluvium.

طمية *ṭamya* /n/ **1** = *ṭamy*. **2** variety or type of *ṭamy*. ‖ *maxluuq min ṭamyit il-ʔabariiq* (created from pitcher clay) stupid.

ط ن ا ش ى

طناشى *ṭanaaʃi* <Gr> /prop n/ *[deris]* (nickname for) Athanasios, traditional name for a (Greek) cotton merchant.

ط ن ب

طنب *ṭanab↓ (u, i)* /vi/ to appeal. *da raagil kariim - ṭanabna ɛalee qaḍa-lna maṣlaḥit-na* he's a generous man - we appealed to him and he saw to the business for us. - vn *ṭanab, ṭanabaan*; ava *ṭaanib*.

اتطنب *ʔiṭṭanab* or *ʔiṭṭanab* /vi/ (impersonal) passive of *ṭanab*. *ʔiṭṭanab ɛalee* his assistance was sought. - iva *miṭṭinib*.

أطنب *ʔaṭnab↑* /vi/ to be long-winded. - vn *ʔiṭnaab*; ava *muṭnib*.

ط ن ب ر [1]

طنبر *ṭambar* /vt/ to fill as full as possible. *mala f-fiwaal wi-ṭambar-u* he filled the sack till it would hold no more. - vn *ṭambara*; ava/pva *miṭambar*.

اتطنبر *ʔiṭṭambar* or *ʔiṭṭambar* /vi/ to be filled to the maximum. - iva *miṭṭambar*.

ط ن ب ر [2]

طنبور *ṭambuur* /n pl *ṭanabiir*/ **1** Archimedes' screw (see Pl.E, 15). **2** *[mech]* flywheel, pulley-wheel. **3** drum, cylinder. **4** metal scoop wheel (used in irrigation, see Pl.E, 22).

طنبورة *ṭambuura* /n pl *-aat*/ **1** *[mech]* **1a** pulley-wheel. **1b** drum, cylinder. **2a** tambourine. **2b** type of drum used in black (Sudanese) *zaar*.

ط ن ب ك see ط م ب ا ك

ط ن ب و ش

طنبوشة *ṭambuuʃa* <It *tambuccio*> /n pl *-aat, ṭanabiiʃ*/ **1** metal scoop wheel used in irrigation (see Pl.E, 22). **2** *[naut]* booby-hatch.

ط ن ج ر

طنجرة *ṭangara* <T *tencere*> /n pl *ṭanaagir*/ *[obsol]* casserole dish. - also *tangara*.

ط ن س see ت و ن س [2] : *ṭuunis*

ط ن ش [1]

طناش *ṭanaaʃ* /n/ indifference.

طنّش *ṭanniʃ* /vt/ to act with indifference towards. *ṭannifuu-ni* they behaved as though I weren't there. *ṭanniʃ* forget it! skip it! - vn *ṭaṭniiʃ*; ava *miṭanniʃ*.

¶ *ṭanniʃ ɛala* to fail to return (s.th.). *ṭanniʃ ɛala l-filuus* he didn't repay the money.

اتطنّش *ʔiṭṭanniʃ* or *ʔiṭṭanniʃ* /vi/ to be disregarded, be forgotten about. - iva *miṭanniʃ*.

ط ن ش [2] see ط ن ا ش ى : *ṭanaafi*

ط ن ط

طنط *ṭanṭ* <Fr *tante*> /n/ title of, and form of address to, an older woman within one's circle of family and acquaintances ≈ aunt.

ط ن ط ا

طنطا *ṭanṭa* /prop n/ Tanta, a town in the centre of the Delta, capital of Gharbiya province.

طنطاوى *ṭanṭaawi* **1** /adj */ relating to Tanta. **2** /n */ (male) native of Tanta.

ط ن ط ن

طنطن *ṭanṭan* /vi/ to make a big fuss over, sing the praises of. *ɛamlin-lu ṭanṭana fil-intixabaat* they're making a big hullabaloo for him in the elections. - vn *ṭanṭana*; ava/pva *miṭanṭan*.

اتطنطن *ʔiṭṭanṭan* or *ʔiṭṭanṭan* /vi/ (impersonal) passive of *ṭanṭan*. *di bḍaaɛa yiṭṭanṭan liiha* is that the kind of merchandise to write home about? - iva *miṭṭanṭan*.

ط ن ن [1]

طنّ *ṭann (i)* /vi/ to ring, resound. *widn-i bi-ṭṭinn* my ears are ringing. - vn *ṭaniin*; ava *ṭwanin*.

ط ن ن [2]

طنّ *ṭinn, ṭunn, ṭann* <perh Fr *tonne*> /n pl *ʔaṭnaan*/ (metric) ton, tonne.

ط ه

طه *ṭah* /fem n, pl *-aat*/ sixteenth letter of the Arabic alphabet. - also *ṭaa, ṭaaʔ*.

ط ه ر

طهر *ṭuhur* or *ṭihir (a)* /vi/ *[Isl]* to become (ritually) pure after the menses, childbirth or sexual intercourse. *baɛd[i] ma b-ṭiṭhar min il-ɛaada* after she is purified from the menses. - vn *ṭuhr, ṭahaara*; ava *ṭaahir*.

طهر *ṭahar (i)* /vt/ *[Isl]* to purify (something defiled). - ava *ṭaahir*; pva *maṭhuur*.

طهارة *ṭahaara* /n/ **1** purity. *ṭahaarit il-ʔabdaan wala ṭahaarit il-ʔadyaan [prov]* (a clean body is preferable to good ritual) ≈ cleanliness is next to godliness. **2** circumcision.

طاهر *ṭaahir[1]* /adj */ pure (in spirit). ‖ *(ʔis-sitt) it-ṭahra* epithet of Sayyida Zaynab.

أطهر *ʔaṭhar* /el/ more/most ritually clean.

طهور *ṭuhuur* /n/ circumcision.

طهّر *ṭahhar* /vt/ **1** to purify, cleanse. *bi-nṣuum ɛaʃaan niṭahhar nafs-i-na* we fast in order to purify ourselves. ‖ *laazim niṭahhar il-balad min il-gawasiis* we must cleanse the country of spies. **2** to sterilize, disinfect. *ʔid-duktuur ṭahhar ig-garḥ* the doctor cleaned the wound. **3** to dredge, clear (a waterway). - vn *taṭhiir*; ava/pva *miṭahhar*.

مطهّر *muṭahhir* /n pl *-aat*/ disinfectant, antiseptic.

اتطهّر *ʔiṭṭahhar* or *ʔiṭṭahhar* /vi/ passive of *ṭahhar*. - iva *miṭṭahhar*.

طاهر *ṭaahir[2]* /vt/ to circumcise. - vn *miṭahra*; ava/pva *miṭaahir*.

مطاهر *miṭaahir* /n */ circumciser.

اتطاهر *ʔiṭṭaahir* or *ʔiṭṭaahir* /vi/ to be circumcised. - iva *miṭṭaahir*.

استطهر *ʔistaṭhar* /vt/ to select for ritual purity. - vn *ʔistiṭhaar*; ava *mistaṭhar*.

ط ه ر ا ن

طهران *ṭahraan* /n/ **1** /prop n/ Teheran. **2** kind of Persian carpet.

ط ه ق

طهق *ṭihiq* or *ṭuhuq* or *ṭahaq (a)* /vi/ to become thoroughly fed up. *ṭihiqt[i] minnu* I'm fed up to the back teeth with him. - vn *ṭuhq, ṭahaqaan*; ava *ṭahqaan*.

طهّق *ṭahhaq* /vt/ to drive to distraction. *ṭahhaqt[i] mraat-ak wi-ɛyaal-ak* you've driven your wife and kids up the wall. - vn *taṭhiiq*; ava/pva *miṭahhaq*.

اتطهّق *ʔiṭṭahhaq* or *ʔiṭṭahhaq* /vi/ to be driven to distraction, become thoroughly fed up. - ava/iva *miṭṭahhaq*.

ط ه م

طهم *ṭaham (i)* /vt/ *[deris]* to fluster, preoccupy, keep busy. *ʔeeh illi ṭahm-ak kida* what has got you in such a flap? - vn *ṭahamaan*; ava *ṭaahim*; pva *maṭhuum*.

اتطهم *ʔiṭṭaham* or *ʔiṭṭaham* /vi/ passive of *ṭaham*. - iva *miṭṭihim*.

انطهم *ʔinṭaham* = *ʔiṭṭaham*. - iva *minṭihim*.

ط ه ى

طهى *ṭaha (i)*↑ /vt/ to cook. ‖ *ṭaha l-maayil* to set the world to rights. - vn *ṭahy*; ava *ṭaahi*; pva *maṭhi*.

طهى *ṭahy* /n/ cooking. ‖ *ɋaliil iṭ-ṭahy* tactless. *ɋillit ṭahy* tactlessness.

طاهى *ṭaahi* /n pl *ṭuhaah*/ cook.

اتطهى *ʔiṭṭaha* or *ʔiṭṭaha* /vi/ to be cooked. - iva *miṭṭihi*.

ط و ب [1]

طوبة *ṭuuba[1]* <Copt> /unit n, pl *-aat*/ **1** a brick. **2** a stone. ‖ *rama ṭubt-(u)* ≈ to give up on (s.o.), to give up

one's hopes of (s.o.). - *gaat iṭ-ṭuuba fil-maɛṭuuba* (the stone came against that which was (already) damaged) there was a coincidence of unfortunate circumstances. - *zayy it-ṭuuba* as (heavy as) a rock. - *sabaɛ ṭubaat* children's ball game in which the two teams try to score by getting possession of the ball and bowling it at a pile of seven stones. **3** a piece of broken brick, tile, cement etc. **4** a piece of dry mud. — /interj/ **5** word said in order to jinx the opposing team (in ball games).

طوب *ṭuub* /coll n/ **1** brick(s). *ṭuub ʔaḥmar* red brick. *ṭuub nayy* unbaked mud brick. *ṭuub kasr* broken brick, rubble. **2** stone(s). *ṭuub ʔabyaḍ* limestone. ‖*ṭuub il-ʔarḍ* everybody, bar none, as in *bi-yiftiki minni l-ṭuub il-ʔarḍ* he's complaining about me to everyone in sight, *bi-yitxaaniq maɛa ṭuub il-ʔarḍ* he'll pick a fight with anyone, he's very quarrelsome.

طوبى *ṭuubi* (also *ʔaḥmar ṭuubi*) /adj invar/ brick-red.

طوّاب *ṭawwaab* /n * and pl *ṭawwaaba*/ brickmaker.

ط و ب ²

طوبه *ṭuuba*² <Copt> /n/ fifth month of the Coptic year, extending from early January to early February. *ṭuuba ṭṣayyar iṣ-ṣabiyya karkuuba* Tuba (is so cold that it) turns a young girl into a hag . *ruuḥi ya ṭuuba ya-lli ma-balletii-ffil-ʔarḍ*ⁱ *wala ɛarʔuuba* go away Tuba, you who haven't moistened (even) a single crack in the earth (comment on the dryness of the month).

ط و ب ³

طوباوى *ṭubaawi*↑ /adj */ *[Chr]* blessed (specifically with reference to Coptic bishops and patriarchs). *ʔabuu-na ṭ-ṭubaawi l-mukarram* our Father, the honoured and blessed (Patriarch).

طوّب *ṭawwab*↑ /vt/ *[Chr]* to praise (bishops and patriarchs) in the liturgy. - vn *taṭwiib*; ava/pva *miṭawwib*; pva *muṭawwab*.

اتطوّب *ʔiṭṭawwab* or *ʔiṭṭawwab* /vi/ passive of *ṭawwab*. - iva *miṭṭawwab*.

ط و ح

طاح *ṭaaḥ (i)* /vi/ **1** to hurtle, career. *ʔil-waad ṭaaḥ min ɛala kitf-i* the boy suddenly toppled off my shoulder. ‖*ṭaaḥ fil-ɛalaali* to exceed the bounds of moderation, as in *ʔil-ʔasɛaar ṭaaḥit fil-ɛalaali* prices went sky-high. - *ṭaayiḥ ibn*ⁱ *raayiḥ* ≈ here today, gone tomorrow, easy come, easy go (of money, possessions). **2** to lash out (verbally or physically). *ṭaaḥ fiyya* he blew up at me. *ṭaaḥ fiyya bil-ɛaṣaaya* he gave me a furious beating with the stick. - vn *ṭeeḥ, ṭayaḥaan*; ava *ṭaayiḥ*.

طوّح *ṭawwaḥ* /vt/ to throw far, fling far. *ʔeeh illi ṭawwaḥ-ak fi-ʔaaxir id-dinya kida* what made you live so far away? - vn *taṭwiiḥ*; ava *miṭawwaḥ*.

اتطوّح *ʔiṭṭawwaḥ* or *ʔiṭṭawwaḥ* /vi/ **1** to be flung or thrown far. **2** to sway, swing. *sakraan bi-yiṭṭawwaḥ* he's drunk and staggering along. **3** to get far, be far removed. *bi-yaaxud ik-koora w-yiṭṭawwaḥ biiha* he takes the ball and gets well clear. *beet miṭṭawwaḥ* a remote house. - ava/iva *miṭṭawwaḥ*.

ط و خ

طوخ *ṭuux* /prop n/ Tukh, a town and *markaz* in Qalyubiya province. ‖*ṭuux fi-miliig* a mix-up, confusion. - *ḥ-awaddii-k fi-ṭuux il-ɛafariit* ≈ I'll send you to the ends of the earth.

ط و د

منطاد *miṭṭaad* /n pl *manaṭiid*/ blimp, airship, dirigible.

ط و ر ¹

طور *ṭoor* /ħ pl *ʔaṭwaar*/ **1** stage, phase. *ṭoor min id-dawra ṭ-ṭabiɛiyya* a stage in the life-cycle. **2** mood, state, disposition (of s.o.). *xarag ɛan ṭoor-u* he lost his temper. *raagil ɣariib il-ʔaṭwaar* a man with an eccentric manner.

مطوور *maṭwuur* /adj */ rash, hasty, scatter-brained.

طوّر *ṭawwar*↑ /vt/ to develop, further, evolve. - vn *taṭwiir*; ava *muṭawwir, miṭawwar*; pva *muṭawwar*.

اتطوّر *ʔiṭṭawwar* or *ʔiṭṭawwar* /vi/ **1** to be developed, be evolved. **2** to burst one's tether, become furious. *ʔiṭṭawwart*ª *ɛaleehum* I got furious with them. - vn *taṭawwur*; ava/iva *miṭṭawwar*.

تطوّر *taṭawwur* /n pl *-aat*/ **1** development. *taṭawwur iṣ-ṣinaaɛa f-maṣr* the development of industry in Egypt. **2** evolution (of the human species).

ط و ر ²

طورة *ṭoora* /n pl *-aat, ṭiwar/ [rur]* **1** foursome, group of four (used in counting certain items of food). *ṭoorit kaḥk* four biscuits. *ṭorteen wi-gooz* ten. **2** some, a little. *ʔiddii-ni ṭoorit fuul* give me a little bit of (cooked) *fuul*.

ط و س ¹

طوّس *ṭawwis* /vt/ to tarnish. - vn *taṭwiis*; ava/pva *miṭawwis*.

اتطوّس *ʔiṭṭawwis*¹ or *ʔiṭṭawwis*¹ /vi/ to be or become tarnished. - ava/iva *miṭṭawwis*.

ط و س ²

طاووس *ṭawuus* /n pl *ṭawawiis*/ peacock.

اتطوّس *ʔiṭṭawwis*² or *ʔiṭṭawwis*² /vi/ to swagger, strut. - ava *miṭṭawwis*.

ط و ش [1]

طواشي *ṭawaafi* /n pl *ṭawaʃiyya/ [obsol]* eunuch.

طوّش *ṭawwiʃ* /vt/ **1** to lop off. **2** to castrate. - vn *taṭwiiʃ*; ava/pva *miṭawwiʃ*.

اتطوّش *ʔiṭṭawwiʃ* or *ʔiṭṭawwiʃ* /vi/ **1** to be lopped off. **2** to be castrated. - iva *miṭṭawwiʃ*.

ط و ش [2] see ط ى ش : *ṭawaʃ, ʔiṭṭawaʃ, ʔinṭawaʃ*

ط و ع

طاع *ṭaaʕ (i)* /vt/ to obey. *ma-ʕad-ʃ' b-yṭiiʕ ʔabuu* he no longer obeys his father. *kull-i-na ṭooʕ ʔamr-ak* we're all obedient to your command. ‖*xarag ʕan ṭooʕ(-u)* to disobey (s.o.). - *ʔana ṭooʕ ʔiid-ak* I'm yours to command. - vn *ṭooʕ*; ava *ṭaayiʕ*; pva *muṭaaʕ*.

طاعة *ṭaaʕa* /n/ obedience. ‖*beet iṭ-ṭaaʕa [Isl law]* a husband's house to which a deserting wife is legally obliged to return. - *ḥukm iṭ-ṭaaʕa* legal decision obliging a deserting wife to return to her husband's house.

طوّع *ṭawwaʕ* /vt/ to render obedient, bring to compliance. - vn *taṭwiiʕ*; ava *miṭawwaʕ*.

اتطوّع *ʔiṭṭawwaʕ* or *ʔiṭṭawwaʕ* /vi/ **1** to volunteer. *ʔiṭṭawwaʕ fig-geef* he volunteered for the army. **2** to be rendered obedient. - vn *taṭawwuʕ*↑; ava/iva *miṭṭawwaʕ*.

متطوّع *miṭṭawwaʕ, mutaṭawwiʕ*↑ /n */ volunteer.

طاوع *ṭaawiʕ* /vt/ to acquiesce with. *ḥ-aṭawiʕ-ha ʕala ʕaḳl-a-ha* I'll go along with her whims, I'll humour her. - vn *miṭawʕa*; ava *miṭaawiʕ*.

اتطاوع *ʔiṭṭaawiʕ* or *ʔiṭṭaawiʕ* /vi/ to be obeyed. - iva *miṭṭaawiʕ*.

أطاع *ʔaṭaaʕ*↑ /vt/ to obey. - vn *ʔiṭaaʕa*; ava *muṭiiʕ*; ava *muṭaaʕ*.

استطاع *ʔistaṭaaʕ*↑ /vi/ to be able. - vn *ʔistiṭaaʕa*; ava *mustaṭiiʕ*.

ط و ف

طاف *ṭaaf (u)* **1** /vt/ to circle, circumambulate. **2** /vi/ to circulate, tour (around). - vn *ṭawaaf, ṭoof, maṭaaf*; ava *ṭaayif*.

طواف *ṭawaaf* /n/ *[Isl]* the ritual of going around the Kaaba in Mecca, particularly during the pilgrimage.

طوف *ṭoof* /n pl *ʔaṭwaaf, ṭiwaaf*/ **1** low surrounding wall of brick plastered with mud. **2** raft.

طوفة *ṭoofa* /n pl *-aat*/ temporary mental disorder. *saʕaat tigiı-lu ṭoofa kida yibḳa yzaʕʕaḳ miʃ ʕaarif bi-yḳuul ʔeeh* sometimes he gets a fit of madness that makes him shout and scream without knowing what he is saying.

مطاف *maṭaaf* /n/ effort, labour. *ʔaadi ʔaxrit il-maṭaaf* ≈ I've been flogging a dead horse.

طايفة، طائفة *ṭayfa* /n pl *ṭawaayif, ṭawaaʔif*/ **1** group, class, party, sect. *ṭayfit il-miʕmaar* construction labourers. **2** Sufi order.

طائفي *ṭaaʔifi*↑ /adj */ factional, sectarian.

طوفان *ṭufaan* /n/ flood.

طوّاف *ṭawwaaf* /n pl *ṭawwaafa/* rural postman.

انطاف *ʔiṭṭaaf* or *ʔiṭṭaaf* /vi/ (impersonal) passive of *ṭaaf*. *ʔil-huduum di ma-yiṭṭaf-ʃ' fiiha* these clothes are not fit to go around the Kaaba in. - iva *miṭṭaaf*.

انطاف *ʔinṭaaf* = *ʔiṭṭaaf*. - iva *minṭaaf*.

طوّف *ṭawwif* /vt/ **1** to build a low wall (of mud-plastered brick) around (s.th.). **2** *[Isl]* to conduct (pilgrims) through the Meccan pilgrimage rites. **3** to cause to circle or circumambulate. - vn *taṭwiif*; ava *miṭawwif*.

مطوّف *muṭawwif* /n */ guide for pilgrims at Mecca.

اتطوّف *ʔiṭṭawwif* or *ʔiṭṭawwif* /vi/ passive of *ṭawwif*. - iva *miṭṭawwif*.

ط و ق [1]

طوق *ṭooḳ* /n pl *ʔaṭwaaḳ*/ **1** ring, hoop. ‖*ṭooḳ in-nagaah* life-belt, life-saver. **2** neckband. **3** *[print]* chase. ‖*huwwa naazil min ṭooḳ-u* (1) he's the very image of him. (2) he can hardly bear (to do or to face) it.

طاق *ṭaaḳ* [1] /coll n/ aperture(s), opening(s) (especially in the wall of a mud-brick house). ‖*min il-baab liṭ-ṭaaḳ* ≈ just like that, for no apparent reason, as in *ʕaawiz titxaaniḳ kida mil-baab liṭ-ṭaaḳ* do you want to quarrel like that, for no reason at all?

طاق *ṭaaḳ* [2] /n pl *-aat*/ measure (in expressing the multiplication of a quantity). *ḥ-addii-lu ṭ-ṭaaḳ ṭaḳeen* I'll pay him back double. *ʔiʃtaɣal iṭ-ṭaaḳ ṭaḳeen* to work with redoubled energy. *ʔil-biḍaaʕa ɣilyit iṭ-ṭaaḳ ʕaʃara* the goods became ten times more expensive.

طاقة *ṭaaḳa* [1] /n pl *-aat, ṭiḳaan*/ **1** aperture, opening (especially one built into the wall of a mud-brick house). *ṭaaḳit iz-ziriiba* ventilation hole of an animal pen. *ṭaaḳit il-furn* opening of a *baladi* oven or baker's oven. *ṭaaḳit il-manaxiir* nostril opening. ‖*ṭaaḳit il-ḳadr [Isl]* the celestial light said to appear on *leelit il-ḳadr*; it is believed that those fortunate enough to see it may have their wishes granted. **2** niche (especially one built into the wall of a mud-brick house). ‖*ʔilli ḥaṭṭeet-u fiṭ-ṭaaḳa tilḳaa fiṭ-ṭaaḳa [prov]* ≈ save for a rainy day. **3** hank, skein, coil (of thread). **4** bolt (of cloth). *ṭaaḳit il-huduum bi-ykuun fiiha talatiin mitr* a bolt of cloth contains thirty metres.

طاقيّة *ṭaḳiyya* /n pl *ṭawaaḳi/* **1** skull-cap (see Pl.F, 1). ‖*ṭaḳiyyit zift* folk remedy for baldness, involving a cap

of pitch. - *ʈaqiyyit il-ʃixfa* a mythical *ʈaqiyya* said to have the power of making its wearer invisible. *da ʃamr[i] mustaḥiil tanfiiz-u - da-nta ɛaayiz ʈaqiyyit il-ʃixfa ɛafaan tiɛraf tiɛmil il-ḥikayaa-di* that's an impossible venture - you'd need to make yourself invisible for that! - *ʃiqlaɛ ʈaqiyt-ak wi-fallii-ha* take off your skullcap and go through it for nits! (to an over-finicky person). **2** head or cap (of a nail or the like).

طوّق *ʈawwaq* /vt/ **1** to surround, encircle. *ʈawwaqt[i] raqabt-u bi-gmiila* I got a hold on him by doing him a favour. **2** to fine (particularly a stowaway on a train). **3** to put to (great) expense. *ḥa-nʈawwaq-ak fi-ɤadwa* we'll get you to cough up the money for a lunch. **4** to buff, shine (with a dry cloth). - vn *ʈaṭwiiq*; ava/pva *miʈawwaq*.

تطويق *ʈaṭwiiq* /n/ rubbing glove (for grooming a horse).

اتطوّق *ʃiʈʈawwaq* or *ʃiʈʈawwaq* /vi/ passive of *ʈawwaq*. *ʃin ḥabbit-ak il-ḥayya ʃiʈʈawwaq biiha [prov]* (if a serpent loves you, wrap it around your neck) one should treasure friendship. - ava/iva *miʈʈawwaq*.

ط و ق [2]

طاق *ʈaaq[3] (i)* /vt/ to endure, bear. *ʃana miʃ ʈaayiq ir-raagil da* I can't stand that man. - /the literary passive imperfect occurs/ *ʃil-ɛiiʃa baqit laa tuʈaaq* life became impossible to bear. ‖ *tisaxxani l-mayya tʈiqii-ha b-ʃiid-ik* you heat the water till it's hand-hot. - vn *ʈayaqaan*; ava *ʈaayiq*.

طاقة *ʈaaqa[2]*, *ʈaaqa* /n pl *-aat*/ power, capability. *ʃiɛmil guhd[i] ʈaqt-ak* do your very best! *ʈaaqit il-makana maḥduuda* the machine has a limited capacity. *da fooq ʈaqt-i* that's more than I can manage. *ʃil-ɤawwaaṣa di b-tiftaɤal biṭ-ʈaaqa n-nawawiyya* this is a nuclear-powered submarine.

اتطاق *ʃiʈʈaaq* or *ʃiʈʈaaq* /vi/ to be endured, be borne. *ʃil-quɛaad fil-balad di ma-yiʈʈaq-ʃ* staying in this country is unbearable. - iva *miʈʈaaq*.

ط و ك ر

طوكر *ʈookar* /prop n/ Tokar (a place to the south-east of Port Sudan at which a small Egyptian force was defeated by the Mahdists in 1884). ‖ *raaḥ fi-ʈookar* to come to a bad end (usually by tangling with the law).

ط و ل [1]

طول *ʈiwil (a)* /vi/ **1a** to become long, be prolonged. *ʃil-leel bi-yiʈwal fiʃ-fita* the nights become longer in winter. **1b** *[soccer]* to overshoot (of the ball). **2** to grow long(er) or tall(er). *bukra faɛr-ak yiʈwal taani* your hair will grow again soon. *ʃif-fagara di ʈiwlit fi-leela* this tree has grown overnight. ‖ *ʃiʈwal↓* get up! stand up! - *raqabt-u ʈiwlit* he felt proud. - *lisaan-u ʈiwil* he became insolent. - *ʃiwɛa s-silaaḥ yiʈwal fi-ʃiid-ak* be careful with that knife in your hand! - *ʃiid-u ʈiwlit ɛala l-fuluus* he stole the money. - vn *ʈuul, ʈawalaan*; ava *ʈaayil*.

طال *ʈaal (u)* **1** /vi/ = *ʈiwil* 1. ‖ *ʈaal il-maʈaal* it's been a long wait, it's been a long time. **2a** /vt/ to reach, attain. *law ʈult-ak ḥ-aqrab-ak* if I catch you I'll hit you! *ʃiid-u ma-ʈalit-ʃ il-burtuqaana* his hand couldn't reach the orange. *ʈaal-u ḥabbit bard* he had a touch of cold. *ʃif-faay da ʈaal-u gaaz* this tea has a slight taste of kerosene. ‖ *la ʈaayil il-moot wala l-ḥaya* half-way between life and death. - *ḥabb[i] w-la-ʈal-ʃ* he had an unrequited love affair. - *ʃilli ʈuul-u ʃaḥsan min ɛeen(-u)* get whatever you can out of (him). **2b** /preverb/ to get to. *law ʃaʈuul ʃakallim-u* ... if (only) I could get to speak to him .... - vn *ʈuul, ʈawalaan*; ava *ʈaayil*.

طول *ʈuul* **1** /vn/ ‖ *ʈuul* (or *ʈuulit*) *il-ʃiid* thievery, larcenous inclination. - *ʈuul* (or *ʈuulit*) *il-baaɛ* influence, pull. - *ʈuul* (or *ʈuulit*) *ir-rooḥ* slowwittedness. - *ʈuul* (or *ʈuulit*) *il-lisaan* rudeness, insolence. - *ʈuul* (or *ʈuulit*) *il-ɛumr* (1) life span. (2) long life, longevity. - *ʈuul* (or *ʈuulit*) *il-baal* patience. **2** /n pl *ʃaʈwaal*/ **2a** length. *ʈuul il-ʃooḍa* the length of the room. *ʃil-ʃaʈwaal di ɛandak* do you have these lengths? *biṭ-ʈuul* lengthwise. ‖ *ɛala ʈuul* (1) straight ahead, straight on. (2) right away, immediately. (3) continuously, incessantly. - *ʈuul bi-ɛarḍ* every inch a ... (and yet revealing a shortcoming), as in *mustaffa ʈuul bi-ɛarḍ[i] wi-ma-fihaa-ʃ ʃibra* a fantastic hospital like this, and no hypodermics in it! - *ʃana f-ɛarḍ-ak ʃana f-ʈuul-ak* ≈ I implore you! **2b** *[geog]* longitude. *xaṭṭ[i] ʈuul* line of longitude. **2c** height, size. *ʃil-walad da ʈuul-u kaam* how tall is that boy? ‖ *wiqiɛ min ʈuul-u* he fell full-length. - *raagil bi-ʈuul-u* a man unaided, a man alone. - *ga b-ʈuul-u* to bring nothing, come empty-handed. - *ya ʈuul-ak ya ʃax-i* be your age, pal! - *hizz[i] ʈuul-ak* get a move on! - *maafi yhizz[i] ʈuul-u* swaggering. **3** /prep/ (also *ʈuulit*) throughout, all ... long. *ʈuul il-leel* all night long. *ʈuul ɛumr-i* all my life. ¶ *ʈuul ma* (also *ʈuulit ma*) /conj/ as long as, while. *ʃana mabsuuṭ ʈuul ma-nta maɛaaya* I'm happy as long as you're with me.

طولة *ʈuula* see *ʈuul*.

طولى *ʈuuli* /adj/ **1** longitudinal. **2** oblong.

طالما *ʈaalama↑* /conj/ as long as.

طوالة *ʈiwaala* /n pl *-aat, ʈawaayil, ʈawawiil*/ **1** feeding trough (built against a wall at floor level for feeding livestock). **2** *[constr]* wooden ramp for climbing scaffolding.

طويل *ṭawiil, ṭiwiil* /adj pl *ṭuwaal*/ **1a** physically long. *naḥyit il-ḥizaam iṭ-ṭawiila* the long end of the strap. ‖*ṭiwiil ʕariiḳ* a great big (person). - *ʔiid-u ṭawiila* he's light-fingered, he's sticky-fingered. - *ḥibaal-u ṭawiila* he takes his own sweet time. - *lisaan-u ṭawiil* he is insolent. **1b** long in duration. *mudda ṭawiila* a long time. *ʔaḳsaaṭ ṭawiilit il-ʔagal* long-term instalments. **2** tall. *raagil ṭawiil zayy il-madna* a very tall man. *ṭawiil wi-ʔahbal* tall and simple, oafish. *kullu ṭawiilin habiil (wa-kullu qaṣiirin makiir) [prov]* every tall man is stupid (and every short man is sly). ‖*(xarag minha) ṭawiil ṭawiil* (he got out of it) scotfree.

طويلة *ṭawiila: ʔabu ṭawiila* **1** tall man. **2** dolt, oaf.

أطول *ʔaṭwal* /el/ more/most long or tall. *lisaan-u ʔaṭwal minnu* he's extremely rude.

طوّالة *ṭawwaala* /n pl *-aat*/ bench.

طوّالى *ṭawwaali* **1** /adj invar/ direct. *xaṭṭ' ṭawwaali* a direct (railway) line. *ḳuṭuraat ṭawwaali* trains operating on direct lines. **2** /adv/ (1) straight ahead, straight on. (2) right away, immediately. (3) continuously, incessantly.

مطال *maṭaal: ṭaal il-maṭaal* it's been a long wait, it's been a long time.

مطيول *miṭeewal, miṭeewil* /adj/ elongated.

انطال *ʔinṭaal* /vi/ to be reached, be reachable. *yinṭaal min taḥt if-fibbaak* it can be reached from beneath the window. - iva *minṭaal*.

اتطال *ʔiṭṭaal* or *ʔiṭṭaal* = *ʔinṭaal*. - iva *miṭṭaal*.

طوّل *ṭawwil* /vt/ **1** to lengthen, make longer. *ṭawwil-li l-kumm' fwayya* make the sleeve a little longer! ‖*ṭawwil baal-ak* be patient! - *ʔallahumma ṭawwil-ik ya rooḥ* God, give me patience! **2** to make tall(er). *ʔil-fustaan da yṭawwil-ik* that dress makes you (appear) taller. ‖*ṭawwil raḳabt-i* he made me feel proud. **3** to bring within reach. *bass' ṭawwilu-huu-li* just let me get my hands on him! *rabb-i ṭawwil-ni lli f-baal-i* Lord, grant my wish! — /vi/ **4** to become (excessively) prolonged. *ʔil-ḳaʕda ṭawwilit* the get-together dragged on and on. ‖*ma-ṭṭawwil-ʃ* (1) don't keep going on! shut up! (2) don't be away for long. - *la ṭṭawwil wala ṭḳaṣṣar [abus]* just shut up! - vn *ṭaṭwiil*; ava/pva *miṭawwil*.

اتطوّل *ʔiṭṭawwil* or *ʔiṭṭawwil* /vi/ passive of *ṭawwil*. - iva *miṭṭawwil*.

اتطاول *ʔiṭṭaawil* or *ʔiṭṭaawil* /vi/ to behave presumptuously or insolently. *ma-tiṭṭawil-ʃ' ʕala lli ʔakbar minnak* don't be rude to your elders. - vn *taṭaawul↑*; iva *miṭṭaawil*.

استطول *ʔistaṭwil, ʔistaṭwal* /vt/ **1** to consider (too) long. *ʔistaṭwilna l-masaafa rgiʕna* we found the distance too long, so we turned back. **2** to consider (too) tall. *ʔistaṭwil in-naxla ḳaam ma-rḍii-ʃ yiṭlaʕ-ha* he thought the palm tree was too high, so he refused to climb it. ‖*baayin ʕaleehum istaṭwaluu-k* apparently they took you for a big dolt. **3** to select for length or tallness. *ʔistaṭwil-li ʕaṣaaya w-hat-ha* find me a long stick and bring it. - ava *mistaṭwil*.

مستطيل *mustaṭiil* **1** /adj/ oblong, rectangular. **2** /n pl *-aat*/ oblong, rectangle.

ط و ل ²

طاولة *ṭawla* <It *tavola*> /n pl *-aat*/ **1a** backgammon. **1b** backgammon board. **2** baker's straight-sided rectangular tray (on which baked goods are prepared for baking and delivery). **3↑** table. *tinis iṭ-ṭawla* table tennis.

طاولجى *ṭawilgi* /n pl *-yya*/ baker's delivery boy.

ط و و

طوّة *ṭawwa* <T *tava* from P> /n pl *-aat*/ metal or earthenware pot.

ط و ى

طوى *ṭawa (i)* /vt/ **1** to fold, fold up. ‖*ṭaweet-u taḥt' baaṭ-i* I made him my man. **2** to put out of mind, forget. *ʔaḥsan ḥaaga tiṭwi l-ḥuzn' da wi-tirgaʕ li-ʔahl-ak* the best thing would be for you to bury this sorrow and return to your family. - vn *ṭayy, ṭawy*; ava *ṭaawi*; pva *maṭwi*.

طىّ *ṭayy* /vn/ ‖*ṣoom iṭ-ṭayy [Chr]* fast of total abstinence from food. - *ṭayy[a] ʕala layy* on an empty stomach, as in *baat ṭayy[a] ʕala layy* he went to bed supperless.

طيّة *ṭayya* /n pl *-aat*/ a fold.

مطوة، مطواة *maṭwa* /n pl *maṭaawi*/ **1** jack-knife, pocket-knife. *maṭwit taʕm [hort]* grafting knife. **2** tall story, fish story. *bi-yiḳrab maṭaawi* he's telling tall stories. **3** *[text]* warp cylinder.

انطوى *ʔinṭawa* /vi/ **1** to be folded, be folded up. ‖*ʔinṭawa baʕd' ma maatit* he cut himself off from society after she died. - *minṭiwi ʕala nafs-u* introverted. **2** to be put out of mind, be forgotten. *ʔinṭawa maʕa z-zaman* it was forgotten with time. - vn *ʔinṭiwa, ʔinṭiwaaʔ*; ava/iva *minṭiwi*.

انطواء *ʔinṭiwaaʔ↑* /n/ introversion.

منطوى *munṭawi↑* /adj */ introverted.

اتطوى *ʔiṭṭawa* or *ʔiṭṭawa* = *ʔinṭawa*. - ava/iva *miṭṭiwi*.

ط ى ب ¹

طاب *ṭaab²* *(i)* /vi/ **1a** to be or become virtuous, be or

become good. *kallim-u - yimkin ʕalb-u yṭiib* talk to him - maybe he'll soften. **1b** to become pleasing, become agreeable. *ʔil-ʕiiʃa ṭaabit luhum* life became agreeable for them. ‖*mimma laʒʒa wa-ṭaabˆ* ≈ the choicest of food. **2a** to become cooked. *ʔistanna lamma l-baṭaaṭis tiṭiib* wait till the potatoes are done. ‖*laḥm-i ṭaayib* I'm worn out. **2b** to become ripe. **3** to heal, recover (from illness). *ṭibt* have you recovered? ‖*ʔiʃrab lamuun ʕalb-ak yiṭiib* drink some lemon - it will refresh you. **4** to turn cool (of weather). - vn *ṭayabaan, ṭiyaab*; ava *ṭaayib*.

طياب *ṭiyaab* /pl n/ (cool) north wind.

طيابة *ṭiyaaba = ṭiyaab*.

طيب *ṭiibˆ* /n/ perfume, scent. ‖*gooz iṭ-ṭiib* or *goozit iṭ-ṭiib* nutmeg. - *ʕan ṭiib xaaṭir* willingly.

طيبة *ṭiiba*[1] /n/ kindness, good-heartedness.

طيّب *ṭayyib*[1] /adj */ **1** good-hearted, kind. *raagil ṭayyib* a good man. *ʔiṭ-ṭayyib marriteen ʕabiiṭ [prov]* he who is excessively kind is a fool. *ma-lak-fⁱ fiṭ-ṭayyib naṣiib* you don't have what it takes to mix with the good (people). **2** naive. **3** *[frozen contexts]* good, excellent. *kullⁱ sana wi-nta ṭayyib* ≈ may the reoccurrence of this day, or occasion, find you well (a greeting on all annually celebrated occasions). *ʕirfeen ṭayyibiin* a good sum of money. *ʃiwayya ṭayyiba* or *ʃiwayya ṭayyibiin* (1) a good while. (2) a good quantity. ‖*zeet ṭayyib* olive oil. - *ʔil-ʕaʃara ṭ-ṭayyiba* (points-winning) ten of diamonds in *koomi* (q.v.). — /n, no pl/ **4** good turn(s), good deed(s). *ʔiʕmil iṭ-ṭayyib wi-rmii l-baḥr [prov]* ≈ do good deeds for their own sake. — /adv/ **5** well. *ʕamaltⁱ ṭayyib* you've done well. — /interj/ **6** all right! O.K.! see further under ط ب [1]

أطيب *ʔaṭyab* /el/ **1** more/most good-hearted. **2** more/most pleasant.

مطايب *maṭaayib* /pl n/ best parts, choicest items. *maṭaayib id-dibiiḥa* the best cuts of meat.

طيّب *ṭayyib*[2] /vt/ **1** to perfume, scent. **2a** to make ripe, ripen. **2b** to cook (food) till ready to eat. **3** to heal. *ʔil-marham ḥa-yṭayyib ig-garḥ* the ointment will heal the wound. ‖*ṭayyib xaṭr-u* he consoled him, made him feel better. **4** *[rur]* to do well, make a good job of. - vn *taṭyiib*; ava/pva *miṭayyib*.

مطيّباتي *miṭayyibaati* /n pl -yya/ **1** member of an audience or claque who voices his appreciation during a performance. **2** flatterer, sycophant.

اتطيّب *ʔiṭṭayyib* or *ʔiṭṭayyib* /vi/ passive of *ṭayyib*[2]. - ava/iva *miṭṭayyib*.

استطيب *ʔistaṭyab, ʔistaṭyib* /vt/ **1a** to consider kind, or good-hearted. **1b** to consider naive. **2a** to select for kindness or goodness. **2b** to select for naiveté. **3** to act like a good-hearted person, give an appearence of kindness. - vn *ʔistiṭyaab*; ava/iva *mistaṭyab, mistaṭyib*.

ط ي ب [2]

طيبة *ṭiiba*[2] /prop n/ (Egyptian) Thebes.

ط ي ب [3] see ط ا ب : *ṭaab*[1], *ṭaaba*

ط ي ح see ط و ح : *ṭaaḥ*

ط ي ر

طار *ṭaar*[2] *(i)* /vi/ to fly. *ʔil-ḥamaama miʃ ʕadra tṭiir* the pigeon can't fly. ‖*ṭaarit lil-mustaʃfa* she rushed off to the hospital. - *kaan ṭaayir min il-faraḥ* he was walking on air. - *ʔin-noom ṭaar min ʕenee* sleep left him. - *ʕaʕl-i* (or *muxx-i) ṭaar* I lost my mind. - *ʔil-maʕaad ṭaar min muxx-i* the appointment went right out of my mind. - *hiyya d-dinya ṭaarit* or *ʔid-dinya ma-ṭarit-ʃ* why are you in such a hurry? - *ʔil-maḥfaẓa ṭaarit* the wallet has been pinched. - *ʕaṭ-ṭaayir* quickly, briefly, instantly, as in *bi-yifham-ha ʕaṭ-ṭaayir* he catches on very quickly. - *bi-yifham-ha w-hiyya ṭayra* he's very quick-witted. - *ʔana ṭaayir xaaliṣ* I'm stoned, I'm far gone. - *koora ṭayra* volleyball. - vn *ṭayaraan*; ava *ṭaayir, ṭaaʔir, ṭayraan*.

طير *ṭayar (i)* /vt/ **1** to rush, hustle (s.o.). **2** to make irrational, make (s.o.) lose his head. *bitaaʕ il-mazamiir ṭayar il-ʕiyaal* the whistle-seller got the children in a frenzy (to buy). - vn *ṭayaraan*; ava *ṭaayir*; pva *maṭyuur*.

طيران *ṭayaraan* /n/ aviation. *ʃirkit ṭayaraan* airline company. *silaaḥ iṭ-ṭayaraan* the Air Force.

طير *ṭeer* /coll n/ **1** poultry and pigeon(s), domestic fowl. ‖*ʕaṣʕaṣ ṭeer-ak la yluuf bi-ʁeer-ak [prov]* ≈ clip your fowl's wings and they won't fly off to anyone else. **2** birds. *ʔiṭ-ṭeer ig-gaariḥ* birds of prey. *miʃ kull iṭ-ṭeer illi yittaakil laḥm-u [prov]* (not all birds have edible flesh) ≈ not everyone will allow himself to be exploited. - *law kaan fii xeer ma-kan-fⁱ ramaa ṭ-ṭeer [prov]* if there were any good in it, the birds would not have discarded it (i.e. it is totally useless). **3↓** flies. *yiʕaawid iṭ-ṭeer wi-yuʕaʕ fil-ʕasal [prov]* (the flies are sure to come back and fall into the honey) there is always a second chance to catch a wrongdoer.

طيرة *ṭeera* /unit n, pl *-aat*/ **1** a chicken, pigeon etc. **2** a bird. **3↓** a fly.

طيور *ṭuyuurˆ* /pl n/ birds. *ʔaṭ-ṭuyuuru ʕala ʔaʃkaal-i-ha taqaʕ [prov]* birds of a feather flock together.

طيّار *ṭayyaar* /n */ **1** aeroplane pilot. ‖- /adjectivally/ *naqiib ṭayyaar* Air Force captain (and similarly for other ranks in the Air Force). **2** /adj/ volatile (of substances). *ʔiz-zuyuut iṭ-ṭayyaara* volatile oils.

طيّارة *ṭayyaara* /n pl *-aat*/ **1** aeroplane. ‖*ṭayyaara waraq* kite. **2** *[rur]* temporary animal pen in a field.
طيّاري *ṭayyaari* **1** /adj/ rash, hasty. *ʕaql-u ṭayyaari* he is rash. **2** /adv/ hastily.
مطار *maṭaar* /n pl *-aat*/ airport.
طيّر *ṭayyar* /vt/ to cause to fly. *ʔil-hawa ṭayyar il-ʕimma* the wind sent the turban flying. ‖*ḥa-ṭṭayyar filus-ha kull-a-ha* she's going to blow all her money. *-ṭayyar diraaʕ-u f-ḥadsa* he lost his arm in an accident. *-ḥa-ṭṭayyar ʕaql-i* (or *muxx-i*) you'll drive me mad! *-gaab gooz ḥamaam wi-ṭayyar-u* he brought a pair of pigeons and kept them till they could fly (i.e. for breeding). -vn *taṭyiir*; ava/pva *miṭayyar*.
مطيّراتي *miṭayyaraati* /adj pl *-yya*/ light-fingered.
اتطيّر *ʔiṭṭayyar* or *ʔiṭṭayyar* /vi/ passive of *ṭayyar*. -iva *miṭṭayyar*.

ط ى ز
طيز *ṭiiz* <T *tiz*> *[coarse]* /fem n, pl *ṭiyaaz, ʔaṭyaaz*/ **1** buttocks, rump, arse. *ʕiryaan iṭ-ṭiiz yiḥibb it-taqmiiz [prov]* (it is) the bare-arsed (who) likes to wiggle ≈ it is the poor who like to keep up with the Joneses. ‖*rooḥ-u f-ṭiiz-u* he's quick-tempered. *-muxx-u f-ṭiiz-u* he's brainless. *-ma-ḥuu-f ṭiiz* he can't sit still. *-humma ṭizeen fi-lbaas* they're inseparable. *-qird abu ṭiiz ḥamra* baboon. *-ṭiiz-ak ḥamra* ≈ you're talking nonsense! **2** rear end of any object. *ṭiiz il-ʕarabiyya* back end of the car. ‖*... fi-ṭiiz ...* right after the other, as in *sigaara f-ṭiiz sigaara* one cigarette after another. -/adj invar/ **3** clumsy, oafish, thick.
أطيز *ʔaṭyaz* /el/ more/most clumsy, oafish or thick.
طيّز *ṭayyiz* /vi/ to behave stubbornly, refuse to move, be stupid and oafish. -vn *taṭyiiz*; ava *miṭayyiz*.

ط ى ش
طاش *ṭaaf (i)* /vi/ to stray, go off course. *ruṣaaṣa ṭayfa ṣabit-ha* a stray bullet hit her. *ʔil-walad ṭaaf* the boy went off the rails. -vn *ṭeef, ṭiif, ṭayaafa, ṭayafaan*; ava *ṭaayif*.
طوس *ṭawaf (i)* /vt/ to make heedless or negligent. *maa lak maṭwuuf kida* why are you so reckless? - ava *ṭaawif*; pva *maṭwuuf*.
طيش *ṭeef, ṭiif* /n/ recklessness, rashness. *ṭeef if-ʃabaab* the heedlessness of youth.
طياشة *ṭayaafa* = *ṭeef*.
طيشة *ṭiifa* /n/ *[deris]* someone held in reserve and used only as a stopgap, someone to fall back on when there is no-one better around.
طايش *ṭaayif* /adj */ rash, hasty.
اتطوش *ʔiṭṭawaf* or *ʔiṭṭawaf* /vi/ passive of *ṭawaf*. -iva *miṭṭiwif*.
انطوش *ʔinṭawaf* = *ʔiṭṭawaf*. -iva *minṭiwif*.

(ط ى ط)
طيط *ṭiiṭ: ʕaaxir iz-zamr' ṭiiṭ [prov]* at the end of the piping is a squeak (of fruitless effort).
طيطه *ṭiiṭa: nooma w-tamṭiiṭa ʕaḥsan min faraḥ ṭiiṭa [prov]* sleep and stretching out (at home) are better than (pointless) party-going.

ط ى ع see ط و ع : *ṭaaʕ*

ط ى ف see also ط و ف
طيف *ṭeef* /n pl *ʔaṭyaaf*/ **1** spectre, apparition. **2** image, shadow. ‖*ʔiṭ-ṭeef iḍ-ḍawʔi [phys]* the spectrum.

ط ى ق see ط و ق : *ṭaaq*

ط ى ل س –
طيلسان *ṭaylasaan* /n/ *[Chr]* mitre.

ط ى م see ط ا ى م : *ṭaayim*

ط ى ن
طين *ṭiin* /n/ **1a** mud, alluvium. ‖*maṣṭaba ṭiin* a mud bench. *bi-ṭiin-u wala ɣasiil il-birak* unwashed (food) is better than (food) washed in (dirty) pools (vegetable vendor's cry). ‖*ʕaamil widn' min ṭiin wi-widn' min ʕagiin [prov]* turning a deaf ear. *-zift iṭ-ṭiin da* that unmentionable so-and-so! *-ḥaẓẓ-i ṭiin* my luck is lousy. *-zawwid iṭ-ṭiin balla* he made things go from bad to worse. **1b** clay. **2** /pl *ʔaṭyaan*/ land, agricultural property.
طينة *ṭiina* /unit n, pl *-aat*/ **1** a clod (of mud or earth). ‖*sakraan ṭiina* dead drunk. **2** a type of clay. ‖*kull-u-hum ṭiina waḥda* they're all of a kind. *- ʔiṭ-ṭiina min iṭ-ṭiina wil-latta min il-ʕagiina [prov]* like father like son.
طيني *ṭiini* /adj/ **1** muddy. **2** made of clay.
طيّن *ṭayyin* /vt/ **1** to daub with mud or clay. **2** *[slang]* to botch, bungle. *ṭayyint il-imtiḥaan* I made a mess of the exam. ‖*ṭayyint-a-ha* I got dead drunk. *-ṭayyint-a-ha ʕala dmaaɣ-ak* you've made it worse for yourself. – /vi/ **3** to become bad, become a mess (of, e.g., a situation). *ʔil-qaḍiyya ṭayyinit* the case took a turn for the worse. -vn *taṭyiin*; ava/pva *miṭayyin*.
مطيّن *miṭayyin* /adj */ lousy, awful. *yoom miṭayyin* a lousy day.
اتطيّن *ʔiṭṭayyin* or *ʔiṭṭayyin* /vi/ passive of *ṭayyin*. -ava/iva *miṭṭayyin*.

ط ى ى see ط و ى : *ṭayy, ṭayya*

ظ

ظ ا

ظا *ẓaa* /fem n/ seventeenth letter of the Arabic alphabet. - also *ẓaaʕ, ẓah*.

ظ ا ء

ظاء *ẓaaʕˀ* /fem n, pl *-aat*/ seventeenth letter of the Arabic alphabet. - also *ẓaa, ẓah*.

ظ ب ط

ظبط، ضبط *ẓabaṭ* (also *zabaṭ*[2]) *(u)* /vt/ **1** to adjust, regularize, order. *ẓabaṭna n-niẓaam fil-madrasa* we re-established order in the school. *bi-yuẓbuṭ il-minabbih ɛafaan yiṣḥa badri* he sets the alarm clock in order to wake up early. || *ʕil-ɛaskari b-yuẓbuṭ (il-xaṭwa) maɛa zmiil-u* the policeman keeps in step with his comrade. **2** to tune (an engine, a musical instrument etc.). || *ʕuẓbuṭ il-maḥaṭṭa* tune into the (radio) station (properly)! **3** to catch, apprehend. *ʕil-buliiṣ ẓabaṭ il-ḥagaat il-masruuqa* the police seized the stolen goods. *miraat-u ẓabaṭit-u fis-siriir maɛa ɛaʃiqt-u* his wife caught him in bed with his mistress. - vn *ẓabaṭaan, ẓabṭ, zabṭ, ḍabṭˀ*; ava *ẓaabiṭ*; pva *maẓbuuṭ*.

ظبط، ضبط *ẓabṭ, ḍabṭ* (also *zabṭ*) /vn/ || *ḍabṭ in-nafs* self-control. - *ʃaay ẓabṭ* excellent tea. - *biẓ-ẓabṭ* exactly, as in *ʕis-saaɛa tnaafar biẓ-ẓabṭ* twelve o'clock on the dot.

ظابط، ضابط *ẓaabiṭ, ḍaabiṭ* (also *zaabiṭ*) /n pl *ẓubbaaṭ, ḍubbaaṭˀ*/ **1** officer (in the police or the armed services). *ẓaabiṭ iḥtiyaaṭi* reserve officer. || *[mil] ṣaffʿ ẓaabiṭ* non-commissioned officer. - *ẓaabiṭ ɛaziim* high-ranking officer (above the rank of major). **2** games master, sports master (in a school, also responsible for discipline). **3** *ẓaabiṭ ʕiiqaaɛ [mus]* drummer.

مظبوط، مضبوط *maẓbuuṭ* (also *mazbuuṭ*) /adj/ **1** exact, in order. *mawaɛiid-u maẓbuuṭa* he is punctual. *ʕiid-u maẓbuuṭa* his hand is sure. *ɛalqa maẓbuuṭa* a sound hiding. - /adverbially/ *bi-yiɛmil fuṿl-u maẓbuuṭ* he does his work properly. **2** /invar/ medium-sweet (of Turkish coffee).

اتظبط، اتضبط *ʕitẓabaṭ* or *ʕiẓẓabaṭ* (also *ʕitzabaṭ* or *ʕizzabaṭ*) /vi/ **1** passive of *ẓabaṭ*. **2** to become adjusted, become regular. - ava/iva *mitẓibiṭ*.

انظبط، انضبط *ʕinẓabaṭ, ʕinḍabaṭˀ* = *ʕitẓabaṭ*. - vn *ʕinẓibaaṭ*; ava/iva *minẓibiṭ*.

انظباط، انضباط *ʕinḍibaaṭ* /n/ (military) discipline.

ظبّط، ضبّط *ẓabbaṭ* (also *zabbaṭ*[2]) **1** /vt/ intensive of *ẓabaṭ*. **2** to become surfeited (of the stomach). - vn *taẓbiiṭ*; ava/pva *miẓabbaṭ*.

اتظبّط، اتضبّط *ʕitẓabbaṭ* or *ʕiẓẓabbaṭ* (also *ʕitzabbaṭ*[2] or *ʕizzabbaṭ*[2]) /vi/ passive of *ẓabbaṭ* 1. - iva *mitẓabbaṭ*.

ظ ب ى

ظبى *ẓaby* /n pl *ẓibyaan, ẓibaaʕ*/ gazelle. || *ʕabu ẓaby* Abu Dhabi.

ظ ر ب

ظرب *ẓarab (u)* /vt/ *[coarse]* to excrete (dung, faeces), crap. || *bi-yuẓrubu ɛyaal* ≈ they breed like rabbits! - vn *ẓarb*; ava *ẓaarib*; pva *maẓruub*.

ظ ر ط

ظرط، ضرط *ẓaraṭ (a)* /vi/ to fart, break wind. || *ẓuraaṭ fi-qafaṣ [prov]* ≈ much ado about nothing. - vn *ẓarṭ, ẓuraaṭ, ẓaraṭaan*; ava *ẓaariṭ*.

ظرطة، ضرطة *ẓarṭa* /n pl *-aat*/ a fart, a breaking of wind. || *wiẓ-ẓarṭa (fiik)* ≈ I don't give a fig (about you) (in answer to, e.g., a threat). - *ʕinta ya si ẓarṭa* you rotter! - also *ḍarṭa*.

ظرّاط *ẓarraaṭ* /adj * and pl *ẓarraaṭa*/ *[coarse]* voluble but undependable, full of flatulent talk.

أظرط ʔaẓraṭ /el/ worse/worst, lousier/ lousiest. *ʔil-ʔitneen ʔaẓraṭ min baʕḍ* they are as bad as each other.

ظرّط، ضرّط *ẓarraṭ* /vi/ **1** to break wind, fart. ‖*ẓarraṭ-lu* he didn't give a damn about him. **2** *[slang]* to worsen, deteriorate (of circumstances). - also *ḍarraṭ*. - vn *taẓriiṭ*; ava *miẓarraṭ*.

انظرّط ʔitẓarraṭ or ʔiẓẓarraṭ /vi/ (impersonal) passive of *ẓarraṭ*. *ḥaqq-ak yitẓarraṭ-lak [coarse]* you should be given short shrift. - also *ʔitḍarraṭ*. - iva *mitẓarraṭ*.

ظ ر ف [1]

ظرف *ẓarf* /n pl *ʔaẓruf, ẓuruuf, ẓurúfa*/ **1** envelope. *ḥuṭṭ il-ʔawraaq fi-ẓarf* put the papers in an envelope. **2** casing (such as a watch case, ball-bearing casing, chuck of a drill, cartridge case, eggcup etc.). — /pl *ẓuruuf* only/ **3** (compelling or unavoidable) circumstance. *gaa-li ẓarf' mufaagiʔ* something unexpected turned up (and delayed me). *ẓuruuf muxaffifa* mitigating circumstances. ‖*da b-ẓuruuf-u* that depends on the circumstances. *-xallii-ha b-ẓuruf-ha* (let's) see how things turn out. — /no pl/ **4** duration, period. *fi-ẓarf' ʔusbuʕeen* in the space of two weeks.

مظروف *maẓruuf* /n pl *maẓariif*/ envelope (particularly in contexts of tendering). *fatḥ il-maẓariif* the opening of sealed tenders (for comparative study by the appointed committee).

ظرّف *ẓarraf[1]* /vt/ **1** to put in an envelope. *maktab il-wuruud bi-yẓarraf it-tilliɣrafaat* the reception office puts the telegrams in envelopes. **2** to slip (s.o.) a bribe. - vn *taẓriif*; ava/pva *miẓarraf*.

انظرّف ʔitẓarraf[1] or ʔiẓẓarraf[1] /vi/ **1** to be put in an envelope. **2** to be slipped a bribe. - iva *mitẓarraf*.

ظ ر ف [2]

ظرف *ẓurf* /n/ sweetness, agreeableness, cuteness.

ظرافة *ẓaraafa* /n/ agreeableness. *ʔil-bint' di ʔaaxir laṭaafa w-ẓaraafa* this girl is extremely pleasant and agreeable.

ظريف *ẓariif* /adj pl *ẓurafa, ẓurafa*/ pleasant, agreeable, delightful. *ʔakalu ʔakla ẓariifa* they ate a nice meal. *kaanit ɡaʕda ẓariifa* it was a pleasant gathering. *manẓar ẓariif* a pleasant sight.

أظرف *ʔaẓraf* /el/ more/most pleasant, agreeable etc.

ظرّف *ẓarraf[2]* /vt/ to smarten up, make attractive. *ʃuf-lak ɡamiiṣ kida yẓarraf-ak wi-yxallii-k ḥilw* find yourself a shirt that will make you look smart and attractive. - vn *taẓriif*; ava/pva *miẓarraf*.

انظرّف ʔitẓarraf[2] or ʔiẓẓarraf[2] /vi/ **1** to make oneself socially agreeable. **2** to be made to look attractive and agreeable. - ava/iva *mitẓarraf*.

انظارف ʔitẓaarif or ʔiẓẓaarif /vi/ to behave ingratiatingly, make a show of pleasantness. - ava *mitẓaarif*.

استظرف *ʔistaẓraf* **1** /vi/ to behave ingratiatingly, make a show of pleasantness. *ʔil-walad da tamalli b-yistaẓraf ʕal-banaat* that boy is always playing up to the girls. **2** /vt/ to select for attractiveness or pleasantness. - vn *ʔistiẓraaf*; ava/pva *mistaẓraf*.

ظ ف ر see [2] ض ف ر

ظ ل ل see [2] ض ل ل

ظ ل م [1]

ظلم *ẓalam (i)* /vt/ to wrong, deny justice to. *ʔana lli gibt-u l-nafs-i ma-ḥadd'-ʃ ẓalam-ni* I brought it on myself, no-one wronged me. *ʔinti b-tiẓlimi l-wiliyya bik-kalaam da* you're maligning the woman by saying that. *ẓalamuu-ni ẓulm il-ḥuseen* they dealt with me as unjustly as Hussein was dealt with (reference is here to the killing of Hussein, the Prophet's grandson, at Karbala in Iraq in 680 AD). - vn *ẓulm*; ava *ẓaalim*; pva *maẓluum*.

ظلم *ẓulm* /n/ injustice. *ʔil-musawaah fiẓ-ẓulm[a] ʕadl [prov]* for everyone to be equally unfairly treated is (a kind of) justice.

ظالم *ẓaalim* /n * and pl *ẓalama*/ wrongdoer, oppressor. *ʔiẓ-ẓaalim wil-maẓluum* the wrong-doer and the wronged. *kull' ẓaalim lu yoom* or *liik yoom ya ẓaalim [prov]* the unjust will get their deserts one day.

مظلوم *maẓluum* **1** /pva/ ‖*ya baxt' min baat maẓluum wi-ma-bat-ʃ' ẓaalim [prov]* ≈ better to be oppressed than be an oppressor. **2** /n pl *maẓaliim*/ victim of oppression. *yaama fil-ḥabs' maẓaliim [prov]* ≈ how many are those who are wrongly punished!

أظلم *ʔaẓlam* /el/ more/most unfair to others. *ʔil-baadi ʔaẓlam* the first to do wrong does the greater wrong.

ظلومة *ẓaluuma↓* /n pl *-aat*/ gross injustice.

مظالم *maẓaalim* /pl n/ wrongs, injustices.

انظلم *ʔitẓalam* or *ʔiẓẓalam* /vi/ to be wronged, be denied justice. - iva *mitẓilim*.

انظلم *ʔinẓalam* = *ʔitẓalam*. - iva *minẓilim*.

اتظلّم *ʔitẓallim* or *ʔiẓẓallim* /vi/ to make a complaint. *ʔitẓallimu min il-qaraar da* they lodged a complaint against this decision. - ava *mitẓallim*.

تظلّم *taẓallum* /n pl *-aat*/ petition, complaint.

ظ ل م see [1] ض ل م [2]

ظ ن ن

ظنّ *ẓann*[1] *(u, i)* /vt/ to think, believe, suspect. *ʃaẓunn-ak fahim-ni* I think you understand me. *ɛala ma ʃaẓunn* as far as I can tell, I think so. *ẓanneet ḥaaga ẓayy*[i] *di* I suspected something like that. - vn *ẓann*; ava *ẓaanin*; pva *maẓnuun*.

ظنّ *ẓann*[2] **1** /vn/ ‖ *kaan ɛand*[i] *ḥusn*[i] *ẓann-i (fii)* he did not disappoint me. - *baɛḍ iẓ-ẓann*[i] *ʃism [prov]* to think even a little badly of others is a sin. **2** /n pl *ẓunuun*/ surmise, suspicion. *laɋeet ẓunuun-i f-maḥall-a-ha* I found my suspicions to be well-founded.

ظنّي *ẓanni* /adj/ pertaining to guessing, speculatory.

ظنّان *ẓannaan, ẓannaan* /adj *, pl *ẓannaana, ẓannaana*/ given to thinking the worst of others.

اتظنّ *ʃitẓann* or *ʃiẓẓann* /vi/ (impersonal) passive of *ẓann*[1]. *ma-yitẓann*[i]*-ʃ fii xeer* he is not the type to be thought well of. - iva *mitẓann*.

ظ ه

ظه *ẓah* /fem n, pl *-aat*/ seventeenth letter of the Arabic alphabet. - also *ẓaa, ẓaaʃ*.

[1] ظ ه ر

ظهر *ẓahar (a)* /vi/ **1** to emerge, appear, become visible. *ʃil-ḥagaat illi b-tiẓhar fis-suuɋ* the things that appear on the market. ‖ *ḥubb iẓ-ẓuhuur* love of display, ostentation. **2** *yiẓhar* it seems, it is evident. *yiẓhar in-naḍḍaara ɛagabit-u* evidently the glasses pleased him. — /vt/ **3** to reveal, cause to appear. *rabb-i-na ẓahar il-ḥaɋɋ* our Lord has revealed the truth (said in the context of a vindication). - vn *ẓuhuur*; ava *ẓaahir*.

ظاهر *ẓaahir* /ava/ ‖ *ʃil-ɛaalim biẓ-ẓaahir wil-xafi* (God) the Knower of what is visible and invisible. - *ʃiẓ-ẓaahir (ʃinn)* apparently, it seems (that) ..., as in *xadt*[i] *ɋarbit fams* it seems I've got sunstroke. - *ḥasab iẓ-ẓaahir* judging by appearances.

ظاهرة *ẓahra*↑, *ẓaahira*↑ /n pl *ẓawaahir*/ manifestation, phenomenon.

ظهورات *ẓuhuraat* /adj invar/ casual, temporary, seasonal (of workers). *ɛummaal ẓuhuraat* casual or seasonal labourers. - /adverbially/ *ʃiʃtaɣal ẓuhuraat* to work as a casual or seasonal labourer.

مظهر *maẓhar* /n pl *maẓaahir*/ appearance, external manifestation. *maẓhar min maẓaahir il-ḥubb* one of the manifestations of love. *bitaaɛ maẓaahir* one who cares only about keeping up appearances.

مظهريّة *maẓhariyya* /n pl *-aat*/ ostentation. *bi-yḥibbu l-maẓhariyya* they like to keep up appearances.

مظهرجي *maẓhargi* /adj * and pl *-yya*/ concerned with outward appearances.

ظهّر *ẓahhar*[2] /vt/ to cause to appear, make visible. *ʃil-maḥluul da bi-yẓahhar il-ḥibr is-sirri* this solution makes the invisible ink appear. - vn *taẓhiir*; ava/pva *miẓahhar*.

اتظهّر *ʃitẓahhar*[2] or *ʃiẓẓahhar*[2] /vi/ to be made to appear, be made visible. - iva *mitẓahhar*.

مظاهرة *muẓahra* /n/pl *-aat*/ demonstration. *muẓahra siyasiyya* a political demonstration.

اتظاهر *ʃitẓaahir*↑ or *ʃiẓẓaahir*↑ /vi/ **1** to make a pretence. *bi-yitẓaahir bil-ɣina* he puts on a show of being rich. **2** to engage in a demonstration. *ʃiṭ-ṭalaba tẓahru ɋuddaam il-wizaara* the students demonstrated in front of the ministry. - iva *mitẓaahir*.

أظهر *ʃaẓhar*↑ /vt/ **1** to reveal, disclose. *ʃaẓhar li-ɛarust-u l-iftiyaaɋ* he revealed his longing to his bride. **2** *[phot]* to develop (film). - vn *ʃiẓhaar*; ava *miẓhir*.

مظهر *muẓhir* /n/ *[phot]* developer, developing fluid.

[2] ظ ه ر see ض ه ر: *ẓahr, ẓahiir, ẓahhar*[1], *ʃitẓahhar*[1]

ع

ع
ع ʕa- contracted form of ʕala (q.v.).

ع ا ج
عاج ʕaag /n/ ivory.
عاجى ʕaagi /adj/ made of ivory, ivory-like, ivory coloured.

ع ا د see ع و د: ʕaada, ʕaadi

ع ا ر see ع ى ر [1] and ع ى ر [3]: ʕaar[1], ʕaar[2]

ع ا ق see ع و ق: ʕaaqa

ع ا ل [1]
عال ʕaal[1] /adj invar/ fine, splendid, excellent. ʃin*faa*ʃ *allaah ħa-txiff' w-tibqa ʕaal* God willing, you'll get better and be fine. ʃid-*dukkaana tʕarafit wi-baqa-lha zabaayin ʕaal* the shop became known and gained a fine clientele. *naas ħilwiin mil-ʕaal* people of the very best sort. *w-allaahi ʕaal win-nabi* what a fine mess! ‖*ʕaal il-ʕaal* first class, A1. -/adverbially/ *bi-yiktib ʕaal* he writes superbly. see further under ع ل ى

ع ا ل [2] see ع و ل: ʕaala

ع ا م see ع م م [1] and ع و م [2]: ʕaam[1], ʕaam[3]

ع ا ن see ع و ن: ʕaana

(ع ا ه)
عاهة ʕaaha /n pl -aat/ physical handicap, disability. *kullu zii ʕaahatin gabbaar [prov]* every person with a physical defect has a cruel streak.
عاه ʕaah /interj/ sound made to urge on cows.

ع ب ا ل see ب ل ى [2]: ʕa-baal

ع ب ء [1] see also ع ب و
عبء ʕibʃ /n/ burden, load.
عبّأ ʕabbaʃ /vt/ *[mil]* to mobilize. ‖ʕabbaʃ *guhuud-ak* mobilize all your efforts, do your utmost. - vn *taʕbiʃa*; ava/pva *miʕabbiʃ*; pva *mùʕabbaʃˀ*.
تعبئة *taʕbiʃa* /n/ mobilization. ʃit-*taʕbiʃa l-ʕamma* general mobilization.
اتعبّأ ʃitʕabbaʃ /vi/ to be mobilized.ʿ - iva *mitʕabbaʃ*.

ع ب ء [2] see ع ب ى

ع ب ب
عبّ ʕabb *(i)* /vt/ to gulp down (a liquid, usually from a bowl or the like). - vn *ʕababaan*; ava *ʕaabib*.
عبّ ʕibb /n/ space between garment and chest. ‖*fataħ luhum ʕibb-u* he encouraged them (to do mischief). - *waaxid kull[a] ħaaga f-ʕibb-u* he has everything in the bag, under his control. - ʃ*il-faar liʕib fi-ʕibb-i* I got worried. - *tiff' f-ʕibb-ak* count yourself lucky! - ʃ*abu ʕibb [non-Cairene]* a greedy man. **2** *[non-Cairene]* area. ʃ*il-ʕibb if-farʃi nizraʕ-u ʃamħ* in the eastern sector we'll plant wheat.

ع ب ث see ع ب س [2]

ع ب د
عبد ʕabad *(u, i)* /vt/ to worship, adore. - vn *ʕibaada*; ava *ʕaabid*; pva *maʕbuud*.
عبادة *ʕibaada* /n pl -*aat*/ act of worship or devotion.
عابدين *ʕabdiin* /prop n/ district of east central Cairo known particularly for the palace of the same name.
المعبود ʃ*il-maʕbuud* /n/ the Deity.
عبد *ʕabd* /n/ **1** /pl *ʕabiid*/ **1a** slave. *ma-yiʃbal-ʃ*

il-hawaan ɣeer il-ʕabiid only slaves accept degradation. ‖*ʃil-ʕabd il-ɣalbaan* poor me. -*ʃil-ʕabdʿ li-llaah* unworthy me. **1b** /n in constr/ (literally: the slave of ...) form used with divine epithets etc. in given names for men, as *ʕabd il-ʕaziiz, ʕabd iʃ-ʃahiid* etc. (also contracted to *ʕab-* as *ʕab-waduud* for *ʕabd il-waduud*). ‖*ʕabd-u* (literally) His slave, used (1) as a given name. (2) as a shortened form of any of the names of the *ʕabd* type. -*ʃaayil ʕabd il-ʔaadir* ≈ carrying the cares of the world on his shoulders, in a gloomy mood. **2** negro. ‖*raas il-ʕabd* long-handled brush used for dusting ceilings. — /pl *ʕibaad*/ **3** mortal man. *ʃil-ʕabdʿ ma-yiʕraf-ʃ il-luʃʃ* mortal man knows nothing of mercy.

عبدة *ʕabda* /n pl *-aat*/ **1** female slave. **2** negro woman or girl.

عبوديّه *ʕubudiyya* /n/ slavery.

عبيد *ʕibeed* /prop n/: *zeed wi-ʕbeed* ≈ Tom, Dick and Harry. *huwwa-na ḥ-asmaʕ kalaam zeed wi-ʕbeed* am I to listen to what just anybody says?

عبّاد *ʕabbaad* /n */ worshipper. ‖*ʕabbaad iʃ-ʃams* sunflower.

معبد *maʕbad* /n pl *maʕaabid*/ temple. *maʕbad yahuudi* synagogue.

اتعبّد *ʃitʕabbid* /vi/ to behave piously or devoutly. -vn *taʕabbud*; ava *mitʕabbid*.

استعبد *ʃistaʕbid* /vt/ to enslave, treat as a slave. -vn *ʃistiʕbaad*; ava *mistaʕbid*.

استعباد *ʃistiʕbaad* /n/ enslavement.

ع ب د ل -

عبدلاوى *ʕabdillaawi* /n/ orange melon (Cucumis chate).

ع ب ر ¹

عبر *ʕabar (u)* /vt/ to cross. *ʃig-geeʃ ʕabar il-qanaal* the army crossed the Canal. -vn *ʕubuur*; ava *ʕaabir*.

عبور *ʕubuur* /n/ crossing. *ʕubuur muʃaah* pedestrian crossing. *maʕrakit il-ʕubuur* the battle of the crossing of the Suez Canal (in October 1973).

عبرة *ʕibra* /n pl *ʕibar*/ **1** lesson, example. *di ʕibra yibʕat-ha-lna rabb-i-na ʕaʃaan niʕtibir biiha* this is a lesson sent by our Lord for us to learn from. *ḥikayt-u ʕibra l-ɣeer-u ʕala ṭuul il-ʃayyaam* his story is an example to others for all time. ‖*ḥalt-u ʕibar* he's in a bad way, he is in a pathetic state. -*dool ʕibar iz-zamaan* those are the sort of riff-raff one gets nowadays. **2** criterion. *ʃil-ʕibra ḥa-tkuun bi-ʕadad ʃafraad il-ʃusra* the criterion will be the size of the family. — /no pl/ **3** underlying purpose, aim. *ʃeeh il-ʕibra min ʕamayl-ak di* what's behind these (disagreeable) actions of yours?

عبارة *ʕibaara* /n/ **1** /pl *-aat*/ expression, phrase. *ʕibaara maʃhuura* a well-known expression. *ʕibaraat musiqiyya* musical phrases. **2** *ʃil-ʕibaara* the matter, the issue. *ʃeeh il-ʕibaara* what's the matter? what's up? *di miʃ il-ʕibaara* that's not the point at issue. *ʃil-ʕibaara miʃ bil-filuus laakin bil-ʃaxlaaq* it is not money but manners that are at issue. *ya sana sooda hiyya l-ʕibaara wiṣlit lil-xinaaq* heavens! have things got to the point of fighting?

¶ *ʕibaara ʕan* tantamount to, something approaching. *bi-yibqa ʕbaara ʕan ʕasal* it becomes like honey. *da ʕbaara ʕan daftar ʃism-u l-ʃustaaz* it is a sort of register called the master ledger. *ʃil-filtar ʕibaara ʕan waraqa* the filter is (just) a piece of paper.

عبير *ʕabiir* /n/ aroma, scent.

عبّارة *ʕabbaara* /n pl *-aat, ʕababiir*/ **1** footbridge, gangplank. **2** = *ʕabbuura* (see Pl.E, 17).

عبّورة *ʕabbuura, ʕabbuura* /n pl *ʕababiir*/ secondary irrigation ditch (see Pl.E, 17).

عبّر *ʕabbar* /vt/ **1** to show consideration or respect for, heed. *ʃana ʃeeh yaʕni ʕalaʃaan ma-trudd-ʃ ʕalayya wala tʕabbar-ni* what do you take me for that you don't answer me or pay me any attention? *b-aʕabbar-u big-gazma* I think he's as worthless as a shoe! **2** to measure. *ʕabbar il-qamḥ wil-qumaaʃ* he measured the wheat and the cloth. -vn *taʕbiir*; ava *miʕabbar*.

¶ *ʕabbar ʕan* to express, be expressive of. *malaabis bi-tʕabbar ʕan il-ʕaṣr* clothes which are expressive of the times.

تعبير *taʕbiir* /n pl *-aat, taʕabiir*/ expression, phrase.

تعبيرى *taʕbiriiʔ* /adj/ pertaining to expression or style. *ʃaxṭaaʔ iṭ-ṭaalib min in-naḥya t-taʕbiriyya* the student's stylistic mistakes.

التعبيريّة *ʃit-taʕbiriyya* /n/ *[art]* Expressionism.

اتعبّر *ʃitʕabbar* /vi/ passive of *ʕabbar*. -iva *mitʕabbar*.

اعتبر *ʃiʕtabar* **1** /vt/ to think of, consider. *ʃana b-aʕtibr-ak zayyʿ ʃaxuu-ya* I think of you as my brother. *ḥ-aʕtibir ʕadam migiyy-ak maʕaana ʃinnak fiʕlan ma-tḥibbʿ-nii-ʃ* I'll take your not coming with us as a sign that you really don't love me. -/the literary passive form occurs even in unelevated speech/ *hiyya ʃaṣnaaf qadiima w-tuʕtabar tuḥaf* they're old sorts and regarded as antiques. **2** /vi/ to learn a lesson, take heed. *ma-b-yiʕtibruu-ʃ bi-lli b-yiḥṣal* they don't learn from what happens. -vn *ʃiʕtibaar*; ava *miʕtibir*; pva *muʕtabar*.

اعتبار *ʃiʕtibaar* /n pl *-aat*/ **1** regard, consideration. *ʕaʃaan l-iʕtibaraat di* because of these considerations. ‖*maʕa* (or *ʕala*) *ʕtibaar* taking into consideration, as in *maʕa ʕtibaar muddit il-ḥabs* with consideration being

given to the period of detention, *ɛala ɛtibaar ʃinnu miʃ ħa-yiigi* since he will not be coming. - *bi-ɛtibaar* in the capacity of, as in *bi-ɛtibaar-i mudiir* in my capacity as director, *wi-bi-ɛtibaar ʃinn' da l-ʃasaas* ... and that being the basis .... **2** standing, good standing. *ma-luu-ʃ iɛtibaar* he is of no consequence. *ʃitradd iɛtibaar-u* (1) his good standing was restored. (2) *[leg]* the conviction was erased from his record.

اعتبارى *ʃiɛtibaari* /adj */ pro-forma, for the sake of appearances.

معتبر *muɛtabar* /adj */ **1** respected, highly regarded. **2** of good quality. *ʂuuf muɛtabar* good quality wool.

استعبر *ʃistaɛbar*↓ /vi/ to learn a lesson. *laazim ʃabuu yiḍrab-u ɛaʃaan yistaɛbar* his father should give him a beating to teach him a lesson. - ava *mistaɛbar*.

² ع ب ر

عبرى *ɛibri* **1** /adj */ Hebrew. **2** /n/ the Hebrew language.

¹ ع ب س

عبسى *ɛabsi* /n pl *ɛabaysa*/ tumbler pigeon of a type distinguished by its black body and white tail.

عبس *ɛabas*¹: *ʃiħna b-niqra f-suurit ɛabas* (or *f-ʃabu ɛabas*) ≈ how many times do we have to go over the matter before you get it into your head?

عبوس *ɛabuus* /adj/ grim, stern, austere.

عبوس *ɛubuus* /n/ grimness of countenance.

عبّاسي *ɛabbaasi* /adj */ Abbasid.

العبّاسيّة *ʃil-ɛabbasiyya* /prop n/ district of north-east Cairo known in particular for its army barracks and lunatic asylum.

عبّاسيّة *ɛabbasiyya* /adj invar/ cuckoo, crazy. *ʃir-raagil da ɛabbasiyya* that man is cuckoo.

عبّس *ɛabbis* /vi/ to frown, scowl, glower. - ava *miɛabbis*.

² ع ب س

عبث *ɛabas*² /n/ triviality, jest, joke.

¶ *ɛabasan* /adv/ in vain, to no avail.

¹ ع ب ط

عبط *ɛabaṭ*¹ /n/ simple-mindedness, silliness, foolishness.

أعبط *ʔaɛbaṭ* /el/ more/most foolish, silly etc.

عباطة *ɛabaaṭa* /n/ simple-mindedness, silliness. *bi-ysuuq il-ɛabaaṭa (ɛal-habaala)* he plays the fool.

عبيط *ɛabiiṭ* /adj pl *ɛubaṭa*/ simple-minded, silly. *bi-yiɛmil ɛabiiṭ* he acts stupid. *ṭawiil wi-ɛabiiṭ* tall and silly. *ʃil-ɛabiiṭ ʃahú [children]* here comes the fool! (a teasing chant).

عبّيطى *ɛubbeeṭi* /adv/ without forethought, without proper consideration.

عبّط *ɛabbaṭ*¹ /vt/ to fool, dupe, take in. - ava *miɛabbaṭ*.

اتعبّط *ʃitɛabbaṭ*¹ /vi/ to be fooled, be duped, be taken in. - iva *mitɛabbaṭ*.

اتعابط *ʃitɛaabiṭ* /vi/ to act the fool, play dumb. - ava *mitɛabbiṭ*.

اعتباطى *ʃiɛtibaaṭi*↑ /adv/ haphazard.

استعبط *ʃistaɛbaṭ* **1** /vt/ to consider stupid. *bi-tistaɛbaṭ-ni walla ʃeeh* do you take me for a fool or what? **2** /vi/ to act stupid, play the fool. *ʃistaɛbaṭ wi-ɛamal nafs-u ma-ʃaf-haa-ʃ* he acted stupid and made out he hadn't seen her. *ʃinta ɛabiiṭ walla b-tistaɛbaṭ* are you (really) stupid or (just) acting stupid? - vn *ʃistiɛbaaṭ*; ava *mistaɛbaṭ*.

² ع ب ط

عبط *ɛabaṭ*² *(u)* /vt/ to hold (s.o.) with one's arms, hug. - vn *ɛabṭ*; ava *ɛaabiṭ*; pva *maɛbuuṭ*.

عبط *ɛubṭ* /n/ embrace, hug. *xad-ni bil-ɛubṭ* he hugged me.

اتعبط *ʃitɛabaṭ* /vi/ to be held with arms, be hugged. - iva *mitɛibiṭ*.

انعبط *ʃinɛabaṭ* = *ʃitɛabaṭ*. - iva *minɛibiṭ*.

عبّط *ɛabbaṭ*² /vi/ to hug vigorously. *ɛabbaṭ fiyya* he gave me a big hug. - ava/pva *miɛabbaṭ*.

اتعبّط *ʃitɛabbaṭ*² /vi/ (impersonal) passive of *ɛabbaṭ*². *ʃid-diriksiyoon ma-yitɛabbaṭ-ʃ' fii kida* the steering-wheel is not to be hugged like that! - iva *mitɛabbaṭ*.

ع ب ع ب

عبعب *ɛabɛab* **1** /vt/ to cram, stuff. **2** /vi/ to become stuffed full, bulge. - vn *ɛabɛaba*; ava/pva *miɛabɛib*.

¶ *ɛabɛab min* to be fed up with, to be sick and tired of.

معبعب *miɛabɛib* /adj/ baggy, stretched out of shape.

اتعبعب *ʃitɛabɛab* /vi/ to be crammed, be stuffed. - iva *mitɛabɛib*.

¶ *ʃitɛabɛab min* = *ɛabɛab min*.

ع ب ق

عبق *ɛabaq (u)* /vi/ **1** to be pervaded (with a smell, smoke, fumes etc.). **2** to accumulate in a confined space (of smoke, fumes etc.). - vn *ɛabq*, *ɛabaqaan*; ava *ɛaabiq*.

عبقة *ɛabqa* /pl *-aat*/ instance noun of *ɛabq*.

عبّق *ɛabbaq* **1** /vt/ to pervade (of smoke, fumes etc.). *ʃil-beet miɛabbaq min riiħit il-ʃakl* the whole house smells of food. *ʃid-duxxaan ɛabbaq il-ʃutubiis* the smoke filled the bus. — /vi/ **2** to become full of smoke, fumes etc. **3** to accumulate in a confined space (of

smoke, fumes etc.). - vn *taɛbiiq*; ava/pva *miɛabbaq*.
تعبيقة *taɛbiiqa* = *ɛabqa*.
اتعبّق *ʔitɛabbaq* /vi/ to be pervaded (with smoke, fumes etc.). - iva *mitɛabbaq*.

ع ب ق ر
عبقرى *ɛabqari* /* and pl *ɛabaqra*/ **1** /adj/ ingenious. **2** /n/ genius. *zaman il-ɛabaqra* the age of geniuses.
عبقريّة *ɛabqariyya* /n/ genius, ingenuity.

ع ب ك
عبك *ɛabak* /n/ heavy, close-textured kind of cotton cloth used as a lining in upholstery and for poor-quality clothes.

ع ب ل [1]
عبل *ɛabal* /n/ **1** filth, grime. *waaḥid bi-ɛabal-u* a crude unrefined person. **2** /coll/ black poplar(s).
عبلة *ɛabala* /unit n, pl *-aat*/ a black poplar.

ع ب ل [2]
عبلة *ɛabla* /prop n/ Abla, heroine of folk-epic and beloved of *ɛantar* (q.v.).

ع ب و see also ع ب ء [1]
عبوّة *ɛubuwwa* /n pl *-aat*/ **1** pack, package, (full) container. *milabbis maḥṭuuṭ fi-ɛubuwwaat ʔaʃkaal muxtalifa* sugared almonds packed in various kinds of containers. **2** capacity (of a container).
عبّى *ɛabba* /vt/ **1** to pack, load or pour (into a container). *nigmaɛ il-quṭn[i] bil-yadd[i] wi-nɛabbii fi-kyaas* we gather the cotton by hand and pack it in sacks. **2** to fill, pack (a container with s.th.). *ɛabbi l-banaadiq* load the rifles! ‖ *ɛabbaa-ha bil-kalaam ɛanhum* he filled her ears with talk against them (and so made her angry with them too). - vn *taɛbiyya*; ava/pva *miɛabbi*.
اتعبّى *ʔitɛabba* /vi/ **1** to be packed, loaded or poured (into a container). **2** to be filled, be packed (of a container). - iva *mitɛabbi*.

ع ب ى
عباية، عباءة *ɛabaaya* /n pl *-aat, ɛiby*/ sleeveless woollen robe (usually black) worn by men over a galabiya (see Pl.F, 18).

ع ت ب [1]
عتب *ɛitib (a), ɛatab[1] (i)* /vi/ to remonstrate gently, offer mild criticism. *ʔumm-u ɛatabit ɛalee lamma laqit-u ma-bi-yzakir-ʃ* his mother reproached him when she discovered that he did not study. - vn *ɛatab*; ava *ɛaatib*.
عتبان *ɛatbaan* /adj */ reproachful, mildly reproving, gently critical.
عتب *ɛatab[2]* /n/ cause of reproach. *ʔil-ɛatab ɛala* ... it's ... that's to blame, as in *ʔil-ɛatab ɛas-sinn* it's age that's to blame, *ʔil-ɛatab ɛan-naẓar* it's (poor) sight (or lack of insight) that's to blame.
عاتب *ɛaatib* /vt/ to rebuke gently, reproach. *ɛaatib ṣaḥb-u ɛala lli ṣadar minnu* he reproached his friend for what he'd done. - vn *ɛitaab, miɛatba*; ava *miɛaatib*.
عتاب *ɛitaab* /n/ reprehension, reproach, rebuke, reprimand.
اتعاتب *ʔitɛaatib* /vi/ **1** to reproach one another. *ʔitqablu wi-tɛatbu wi-tṣalḥu* they met, discussed what they had against each other and made up. **2** to be reproached. *ʔis-sakraan la yitɛaatib wala yitlaam* there is no point in remonstrating with or reproaching a drunk (for what he does). - ava/pva *mitɛaatib*.

ع ت ب [2]
عتب *ɛatab[3]* /coll n/ upper or lower support beams of door- or window-cases, lintels, thresholds, sills.
عتبة *ɛataba* /unit n, pl *-aat, ʔaɛtaab*/ an upper or lower support beam of a door-or window-case, a lintel, a threshold, a sill. ‖ *ʔil-beet bi-yitɛirif min ɛatabt-u [prov]* (a house is known by its threshold) ≈ the first impression tells all. - *ʔaqdaam wi-ʔaɛtaab* see *qadam*.
العتبة *ʔil-ɛataba* (also *ʔil-ɛataba l-xaqra*) /prop n/ Ataba, a large square and the surrounding area in north-east Cairo.
عتّب *ɛattib* /vt/ to cross the threshold of, enter (a house). - vn *taɛtiib*; ava/pva *miɛattib*.

ع ت ت
عت، عتّ *ɛatt (i)* /vi/ **1** to become damaged by moths. **2** to deteriorate (of cloth) through long storage. - vn *ɛatataan*; ava *ɛaatit*.
عتّة، عتّة *ɛitta* /coll n, pl *ɛitat*/ clothes-moth(s).

ع ت د
عتيد *ɛatiid* /prop n/ *[Isl]* angel reputed to accompany one through life, stationed on one's left-hand side, to record one's evil deeds (cf *raqiib*).

ع ت ر [1]
عتر، عثر *ɛitir (a)* /vi/ **1** to trip. *ɛitir fig-gibba* he tripped on his robe. **2** to happen (across s.th.), light (upon s.th.). *ɣallib fil-waraɣ li-ḥadd[i] ma ɛitir fiṭ-ṭalab bitaaɛ-i* he riffled through the papers till he came across my

application. *fiḍilt adawwar li-ḥadd' ma ɛtirt' f-bint il-ḥalaal* I went on looking till I found Miss Right. *ɛitirt[a] ɛala baqqaal kuwayyis* I found a good grocer. - vn *ɛataraan*; ava *ɛaatir*.

عترة، عرة *ɛatra* /n pl *-aat, ɛataraat*/ a false step, a trip, a stumbling. *rabb-i-na yikfii-ku farr[a] ɛatraat iz-zamaan [beggars]* may God protect you from falling on bad times.

عتّر، عرّ *ɛattar* /vt/ **1** to cause to stumble. **2** to cause to happen (across s.th.). *ʃaxuu-ya ɛattar-ni fiiha* my brother told me where to find her. - ava/pva *miɛattar*.

ع ت ر [2]

عترة *ɛitra↓* /adj invar/ **1** gallant, chivalrous and courageous. **2** strong.

ع ت ر [3] see ع ط ر : *ɛiṭr*

ع ت ر س

عترس *ɛatras* /vi/ to resist, balk. *ʃil-baab miɛatras* the door is stuck. - vn *ɛatrasa*; ava *miɛatras*.

عتريس *ɛatriis* /adj */ obdurate.

ع ت ق [1]

عتق *ɛataq (a)* /vt/ **1** to leave be, leave in peace. *ʃiɛtaq-ni y-aaba* stop pestering me, Dad (to, e.g., a beggar). ‖*da ma-yiɛtaq-ʃ' wala waḥda* he leaves no woman intact. **2** to release, set free, emancipate (e.g., a slave). - vn *ɛataqaan, ɛitq*; ava *ɛaatiq*; pva *maɛtuuq*.

عتقة *ɛatqa* /inst n, pl *-aat*/ a release, an emancipation.

عاتق *ɛaatiq↑* /n/ shoulder. ‖*ɛala ɛaatiq* within the responsibility of.

عتقى *ɛutaqi[1]* /n pl *-yya*/ **1** reciter of the *ɛttaaqa*, a *fiqi* of the lowest sort. **2** base scavenging type, one always on the look-out for a free meal.

عتاقة *ɛitaaqa* /n pl *-aat*/ recitation of prayers and Koranic verses by a *fiqi*, intended to obtain forgiveness of sin for the deceased.

اتعتق *ʃitɛataq* /vi/ **1** to be left alone, be left in peace. **2** to be released, be set free, be emancipated. - iva *mitɛtiq*.

أعتق *ʃaɛtaq↑* /vt/ to release, set free, emancipate. - ava *miɛtiq*.

ع ت ق [2]

عتقى *ɛitqi* /adj/ old, mature.

عتقى *ɛutaqi[2]* /n pl *-yya*/ *[deris]* repairer of old worn-out footwear.

عتيق *ɛatiiq* /adj/ ancient (of inanimate things). ‖*maṣr il-ɛatiiqa* Old Cairo.

عتيقة *ɛatiiqa* /n pl *ɛataaqi*/ old hen, laying hen over two years old. ‖*ʃid-dihn' fil-ɛataaqi [prov]* (it's the old hens that have the fat) ≈ the best wine comes out of old bottles. - *ʃibn il-ɛatiiqa [abus]* ≈ son of a bitch.

عتّق *ɛattaq[1]* **1** /vt/ to leave (e.g., wine) to age and mature. **2** /vi/ to age and mature (of wine, people etc.). - vn *taɛtiiq*; ava/pva *miɛattaq*.

اتعتّق *ʃitɛattaq[1]* /vi/ to be left to age and mature. - iva *mitɛattaq*.

ع ت ق [3]

عتّق *ɛattaq[2]* /vt/ to load (e.g., a cart) and secure the load with ropes. - vn *taɛtiiq*; ava/pva *miɛattaq*.

اتعتّق *ʃitɛattaq[2]* /vi/ to be loaded (of a cart). - iva *mitɛattaq*.

ع ت ل

عتل *ɛatal[1] (i)* **1** /vt/ to carry, bear. *ma-tiɛtil-ʃ' hamm* don't worry. **2** /vi/ to groan from exhaustion. - vn *ɛatalaan, ɛatl*; ava *ɛaatil*; pva *maɛtuul*.

عتلة *ɛatla* /n pl *-aat*/ **1** instance noun of *ɛatl*. **2** load, burden.

عتل *ɛatal[2]* /coll n/ lever(s), crowbar(s).

عتلة *ɛatala* /unit n, pl *-aat, ɛataayil*/ a lever, a crowbar.

عتالة *ɛitaala* /n/ burden, load to be carried.

عتّال *ɛattaal* /n * and *ɛattaala*/ one who loads and unloads trucks, porter, carrier.

اتعتل *ʃitɛatal* /vi/ to be carried, be borne (especially of worry). *da walad kuwayyis ma-yitɛitil-luu-ʃ hamm* he's a good boy, one doesn't need to worry about him. - iva *mitɛtil*.

عتّل *ɛattil* /vt/ to carry (a number of things, or a number of times). - vn *taɛtiil*; ava/pva *miɛattil*.

اتعتّل *ʃitɛattil* /vi/ passive of *ɛattil*. - iva *mitɛattil*.

ع ت م

عتمة *ɛatma, ɛatama* /n/ darkness.

عتيم *ɛitim* /adj/ dark.

عتّم *ɛattim* **1** /vt/ to darken. **2** /vi/ to grow dark. *ʃid-dinya miɛattima* it has become dark. - vn *taɛtiim*; ava/pva *miɛattim*.

اتعتّم *ʃitɛattim* /vi/ to be darkened. - iva *mitɛattim*.

ع ت ه

عته *ɛatah* /n/ idiocy.

معتوه *maɛtuuh* /n * and pl *maɛatiih*/ simpleton, idiot, madman.

اتعته *ʃinɛatah* /vi/ to become mad, lose one's mind.

ع ت و ل

عتويل *ɛatwiil* /adj pl *ɛatawla*/ veteran, expert, very ex-

perienced. ‖*(firqit) il-ʕatawla* the National Club football team.

ع ث ث see ع ت ت

ع ث ر see ع ت ر [1]

ع ث م see ع س م

ع ج ب

عجب *ʕagab[1] (i)* /vt/ to please, be pleasing to. *ʃin-naqqaara ʕagabit-u* he liked the glasses. *taʕaala f-ʃayy[i] waqt[i] yiʕgib-ak* come any time you please. *fasaxit xuṭubit-ha ʕafaan il-ʕariis miʃ ʕagib-ha* she broke off her engagement because the suitor didn't appeal to her. *ʃilli ma-yiʕgib-uu-ʃ yiwzin barra* ≈ if you are not satisfied go somewhere else! ‖*ma-yiʕgib-uu-ʃ il-ʕagab (wala ṣ-ṣiyaam fi-ragab) [prov]* (he is pleased neither by wonders nor even by fasting in Ragab) ≈ he is the sort who will always find something to disapprove of, even in the most remarkable things. - vn *ʕagab*; ava *ʕaagib*.

عجب *ʕagab[2]* /n/ **1** wonder, amazement. ‖*ya lil-ʕagab* good gracious! **2** /coll/ amazing things, prodigious things. *ʃana ʃuft il-ʕagab* I saw incredible things.

عجبة *ʕagaba* /n/ a wonder, a curiosity, an astonishing thing.

عجب *ʕugb↑* /n/ pride, conceit, vanity.

أعجب *ʃaʕgab[1]* /el/ more/most astonishing, strange etc.

عجيب *ʕagiib* /adj/ wondrous, amazing, strange. *naas muṭaṣawwifa labsiin ʃalwaan ʕagiiba* Sufis wearing odd colours. *manẓar ʕagiib* an amazing sight.

عجيبه *ʕagiiba* **1** /n pl *ʕagaayib*/ marvel, strange happening. ‖*ʕagaayib ʕaleeki ya dunya* what a strange world! **2** /interj/ strange! odd! *ʕagiiba - di lissa kaanit waqfa gambi min sanya waḥda* funny! she was standing next to me just a second ago.

أعجوبة *ʃuʕguuba* /n pl *ʃaʕagiib*/ wonder. *ʃuʕguubit il-ʕagaayib illi ʃuft-a-ha* the strangest thing I ever saw.

اتعجّب *ʃitʕaggib* /vi/ to wonder, be amazed. *miraat-i kaanit titʕaggib minni* my wife used to wonder at me. - vn *taʕaggub*; ava *mitʕaggib*.

تعجّب *taʕaggub* /n/ astonishment. ‖*ʕalaamit it-taʕaggub* exclamation mark.

اتعاجب *ʃitʕaagib* /vi/ to behave conceitedly. *bi-titʕaagib bi-gamal-ha* she makes a parade of her beauty. - ava *mitʕaagib*.

أعجب *ʃaʕgab[2]↑* /vt/ to please, arouse the admiration of. *ʃana muʕgab bi-fuṿl-ak* I am pleased with (or: I admire) your work. - /the literary passive occurs/ *ʃuʕgib bi-nafs-u* he became conceited. - vn *ʃiʕgaab*; ava *muʕgib*; pva *muʕgab*.

معجب *muʕgab* /n */ admirer. *ʕandaha muʕgabiin kitiir* she has many admirers. *muʕgabiin koora* soccer fans.

معجباني *miʕgibaani↓* /n pl *-yya*/ wondrous person. *mabruuk ʕaleek ya miʕgibaani ya ṿaali* congratulations you (bridegroom) with your head in the air! (from a wedding song).

استعجب *ʃistaʕgib* /vi/ to be astonished. *ʃana kunt[i] b-astaʕgib min razalit-ha* I used to be amazed at her insolence. - ava *mistaʕgib*.

ع ج ج [1]

عجّ *ʕagg (i)* /vt/ to hit (especially on the back). ‖*ʕagg id-dunya f-baʕḍ-a-ha* he set everyone against everyone else. - vn *ʕagagaan, ʕagg*; ava *ʕaagig*; pva *maʕguug*.

عجّة *ʕagga* /pl *-aat*/ instance noun of *ʕagg*.

اتعجّ *ʃitʕagg* /vi/ to be hit, be given a blow. - iva *mitʕagg*.

ع ج ج [2]

عجّة *ʕigga* /n pl *-aat, ʕigag*/ firm sort of omelette, thickened with flour, usually about an inch thick and with a filling of vegetables or meat.

ع ج ر [1]

عجر *ʕagr* /adj invar/ *[rur]* unripe (of fruit or vegetables).

أعجر *ʃaʕgar* /adj, fem *ʕagra*, pl *ʕugar, ʕugr*/ crude, uncouth.

ع ج ر [2] see ع ج ج و ر : *ʕagguur*

ع ج ر [3] see ع ج ى ر : *ʕagiir*

ع ج ج و ر

عجّور *ʕagguur* (also *fammaam ʕagguur*) /coll n/ hairy cucumber melon(s) (Cucumis melo var. chate).

عجّورة *ʕagguura* /pl *-aat*/ unit noun of *ʕagguur*.

عجّوراية *ʕagguuraaya* = *ʕagguura*.

ع ج ر ف

عجرفة *ʕagrafa* /n/ arrogance.

معجرف *miʕagraf* /adj */ arrogant.

اتعجرف *ʃitʕagraf* /vi/ **1** to become arrogant. **2** to behave arrogantly. - ava *mitʕagraf*.

ع ج ز

عجز *ʕigiz (a)* /vi/ to fail, become incapable. *ʕigiz ʃinnu*

yiwṣal-lu he was unable to reach it. *ʃana ʕaagiz ʕan if-fukr* I can't thank you enough. ‖ *ʃin ʃa-lla yiʕgaz fi-ʕeen-u w-ʕafiit-u [women]* may he become blind and sick! - vn *ʕagz*; ava *ʕaagiz*.

عجز *ʕagz* /n pl *ʕuguzaat*/ **1** shortage, deficiency, deficit. **2** disability, inability, incapacity. *ʕagz' kulli* total disability.

عاجز *ʕaagiz* /n pl *ʕagaza*/ disabled person, incapacitated person (whether deaf, blind, crippled or otherwise afflicted). *ʕaagiz naẓar* blind.

العواجز *ʃil-ʕawaagiz* /pl n/: *ʃumm il-ʕawaagiz* the mother of those who cannot look after themselves (i.e. the poor, the old, the incapacitated) (epithet of Sayyida Zaynab).

عجز *ʕagaz* /n/ old age, infirmity.

عجوز *ʕaguuz* /adj pl *ʕawagiiz, ʕagaayiz*/ old, elderly, aged. *malgaʃ ʕagaayiz* old people's home. ‖ *ʃibrit il-ʕaguuz* nettle(s). - *bard il-ʕaguuz* (or *il-ʕaguuza*) the first eight days of the month of Amshir, noted for their bitter cold. - *zayy' ʕagaayiz il-faraḥ - ʃakl' w-naqwara [prov]* like old biddies at a wedding - eating and criticizing.

العجوزة *ʃil-ʕaguuza* /prop n/ district of Guiza on the bank of the Nile.

معجزة *muʕgiza* /n pl *-aat*/ miracle.

عجّز *ʕaggiz* /vt/ **1** to incapacitate, cripple. *ʃiddaa-li suʃaal ʕaggiz-ni* he posed me a question that nonplussed me. — /vi/ **2** to grow old. *ʃana ʕaggizt' xalaaṣ* I'm past it. **3** to fall short. *ʃil-mizaniyya ʕaggizit* the budget showed a deficit. *ʃil-filuus ʕaggizit maʕaaya f-fahr-i-da* I have run out of money this month. *ʃil-qumaaʃ ʕaggiz* the cloth wasn't enough. - vn *taʕgiiz*; ava/pva *miʕaggiz*.

اتعجّز *ʃitʕaggiz* /vi/ to be incapacitated, be crippled. - iva *mitʕaggiz*.

ع ج ل [1]

عجل *ʕagal[1]* /n/ haste. *bil-ʕagal* or (less commonly) *ʕalaʔ ʕagal* quickly.

عجلة *ʕagala[1]* /n/ haste, hurry. *raagil ʕandu ʕagala* a hasty man. ‖ *fil-ʕagala n-nadaama [prov]* ≈ haste makes waste. - *ʃil-ʕagala min if-fiṭaan [prov]* haste comes from the Devil.

عجول *ʕaguul* /adj */ hasty.

عاجل *ʕaagil* /adj */ urgent, fast. ‖ *xayru l-birri ʕaagíl-u [prov]* ≈ he gives twice who gives quickly.

عجّل *ʕaggil* **1** /vt/ to hasten, hurry (s.th. or s.o.) up, expedite. **2** /vi/ to be in haste, hurry. - vn *taʕgiil*; ava/pva *miʕaggil*.

اتعجّل *ʃitʕaggil* **1** /vt/ to hasten, hurry (s.th. or s.o.) up. — /vi/ **2** to hurry, make haste. **3** to be hurried up, be expedited. - ava/iva *mitʕaggil*.

استعجل *ʃistaʕgil* **1** /vt/ to speed up, hurry. *ʃil-garsuun istaʕgil iṭ-ṭalabaat* the waiter speeded up the orders. **2** /vi/ to make haste, be in a hurry. *ʃiʃmiʕna ḥa-nistaʕgil ʕala ʃaaxir iz-zaman* why should we hurry now after all this time? *ʃiz-zabaayin dayman mistaʕgiliin* the customers are always in a hurry. - vn *ʃistiʕgaal*; ava/pva *mistaʕgil*.

مستعجل *mistaʕgil* /adj */ **1** urgent. *ʃuɤla mistaʕgila* an urgent job. **2** express (of post etc.).

ع ج ل [2]

عجل *ʕagal[2]* /coll n/ **1** wheel(s). **2** cycle(s), (loosely also) certain small wheeled transporters (e.g., push chair, shopping trolley, invalid carriage).

عجلة *ʕagala[2]* /unit n, pl *-aat*/ **1** a wheel. *fii ʕagal bi-talat ʕagalaat* there are cycles with three wheels. **2** a cycle, (loosely) a small wheeled transporter (e.g., push chair, shopping trolley, invalid carriage). ‖ *ʕagala sabta [gym]* exercycle. - *zaqqª ʕagal(-u)* to leave, push off. **3** pessary.

عجلاتى *ʕagalaati* /n pl *-yya*/ repairer of cycles, hirer of cycles.

ع ج ل [3]

عجل *ʕigl* /n pl *ʕuguul, ʕiggaal, ʕugúla*/ **1** calf. ‖ *beeḍ il-ʕigl* (1) hearts (in cards). (2) variety of mango. - *zayy il-ʕigl* all brawn and no brain. - *ʕigl' ʃabiis* Apis bull. **2** dolt, blockhead.

عجّالى *ʕaggaali* /adj/ of or pertaining to calves. *ʃil-gazzaar da bi-ysammi g-gamuus ik-kibiir ʕaggaali* that butcher calls old buffalo meat young beef. ‖ *muxx-u ʕaggaali* he's stupid.

ع ج م

عجم *ʕagam* /n/ *[mus]*: *ʕagam ʕaʃiraan* mode in Arabic music beginning on B flat and having E flat. *ʕagam miraṣṣaʕ* mode in Arabic music beginning on B flat and having E half flat.

عجمى *ʕagami* /adj invar/ Persian. *siggaad ʕagami* Persian rugs. ‖ *ʃiiʃa ʕagami* a *ʃiiʃa* prepared with a cone of tobacco wrapped in the leaf. - *ʃil-ḥigaaz il-ʕagami [mus]* mode in Arabic music beginning on D and having F sharp and B half flat.

العجمى *ʃil-ʕagami* /prop n/ el-Agami, a coastal resort to the west of Alexandria.

عجميّة *ʕagamiyya* /n/ filling of clarified butter, honey and sesame used in pastries etc.

أعجم *ʔaʕgam* /adj, fem *ʕagma*/ incapable of speech, dumb (of animals).

أعاجم ʃaɛaagim /pl n/ *[obsol]* foreigners, aliens (particularly Persians and Tartars).
معجم *muɛgam*↑ /n pl *maɛaagim*/ dictionary, lexicon.

ع ج ن
عجن *ɛagan (i)* /vt/ to knead. ‖*latt*^{i} *w-ɛagan* to chatter. - *ʃana ɛagn-u w-xabz-u* ≈ I know him inside out. - *maɛguun bi-mayyit il-ɛafariit* ≈ the Devil personified. - vn *ɛagn, ɛagiin*; ava *ɛaagin*; pva *maɛguun*.
عجنة *ɛagna* /inst n, pl *-aat*/ a kneading.
عجين *ɛagiin* /n/ dough. ‖*ɛamalt-i-lu widn*^{i} *min ʧiin wi-widn*^{i} *min ɛagiin* I turned a deaf ear to him.
عجينة *ɛagiina* /n/ **1** /unit n/ one lot of dough. **2** /pl *ɛagaayin*/ paste, batter. *ɛagiinit ʧuub* mud-mix for bricks. ‖*baqit zayy il-ɛagiina f-ʃidee* she became as putty in his hands. - *huwwa lissa ɛagiina* he is still young and impressionable. **3** nature, temperament. *ɛagint-u ʧayyiba* he is good-natured.
معجون *maɛguun* /n pl *maɛagiin*/ **1** paste, cream. *maɛguun ḥilaaqa* shaving cream. *maɛguun sinaan* tooth-paste. **2** stopping, putty. **3** electuary. see further under م ع ج ن
معجونجى *maɛgungi* /n pl *-yya*/ *[obsol]* pharmacist, chemist, dealer in pharmaceuticals and toiletries.
معاجينجى *maɛagingi* = *maɛgungi*.
عجّان *ɛaggaan* /n * and pl *ɛaggaana*/ **1** construction worker who mixes mortar. **2** one who kneads dough.
معجن *maɛgan* /n pl *maɛaagin*/ kneading trough.
معجنة *maɛgana* /n pl *maɛaagin*/ pit in which mud bricks are made.
اتعجن *ʃitɛagan* /vi/ to be kneaded. - iva *mitɛigin*.
انعجن *ʃinɛagan* = *ʃitɛagan*. - iva *minɛigin*.
عجّن *ɛaggin* /vt/ **1** to knead thoroughly. **2** to cause to have a doughy or pasty consistency. *ɛeef miɛaggin* doughy bread, badly-baked bread. — /vi/ **3** to become doughy or pasty in consistency. - vn *taɛgiin*; ava/pva *miɛaggin*.
اتعجّن *ʃitɛaggin* /vi/ **1** to be thoroughly kneaded. **2** to be made or become doughy or pasty in consistency. *ʃir-ruzz itɛaggin* the rice stuck together in doughy lumps. - vn *taɛaggun*↑; ava/iva *mitɛaggin*.

ع ج و
عجوة *ɛagwa* /coll n/ pressed date(s).

ع ج و ر see ع ج ج و ر : *ɛagguur*

ع ج ى ر
عجير *ɛagiir* /n/ variety of sedge (Cyperus difformis).

ع د ا see ا م : *maa ɛada*

(ع د ب)
عذبة *ɛadaba* /n pl *-aat*/ turban end hanging on the shoulder.
عاذب، عادب *ɛaadib* /adj/ insufficiently salted, insipid, tasteless. - also *ɛaadim*.

ع د د
عدّ *ɛadd*^{1} *(i)* /vt/ **1** to count, enumerate. ‖*ma-tɛidd*^{i}*-ʃ* and what have you, as in *ruzz*^{i} *w-ʧamaaʧim wi-baṣal ma-tɛidd*^{i}*-ʃ* rice, tomatoes, onions and what have you. - *raaḥ wi-ɋaal ɛidduu-li* he went off and nobody heard from him again. **2** to consider. *ʃana b-aɛidd-ak raagil* I think of you as a man. *ɛidd-i-ni ɋult*^{i} *kida* (even) supposing that I said so. - vn *ɛadd, ɛadadaan*; ava *ɛaadid*; pva *maɛduud*.
عدّ *ɛadd*^{2}↓ /n pl *ɛuduud*/ group usually of five (used in counting certain items of food). *ʃana xadt*^{i} *ɛiʃriin ɛadd*^{i} *lamuun tibɋa fluus-ak kaam* I took twenty lots of five lemons, so how much do I owe you?
عدّة *ɛadda* /inst n, pl *-aat*/ a counting. ‖*kull*^{i} *raqṣa liiha ɛadda muxtalifa* each dance has a different rhythm.
عدّة *ɛidda* /n/ **1** number, total. *ɛiddit-hum kaam* how many are they? *ʃif-fikaat bi-tixḍaɛ li-ɛiddit ʃigraʃaat* the cheques go through a number of procedures. **2** *[Isl law]* prescribed period after which a woman whose marriage has been terminated may remarry. — /pl *ɛidad*/ **3** set of tools or implements, kit. *ɛiddit fuxl* work kit. *ɛiddit ḥilaaqa* shaving kit. *ṣaaniɛ ɛidda* toolmaker. ‖*walliduu-ha bil-ɛidda* they gave her a forceps delivery. — *ɛidad* /pl n/ **4** tools. *bi-nistaɛmil ɛidad muxtalifa* we use a variety of tools.
عدّيّة *ɛiddiyya* /n pl *-aat*/ number. *ma-l(uu)-ʃ ɛiddiyya* without number, very many. ‖*ɛiddiyyit yasiin* sevenfold recitation of the *yasiin* sura of the Koran, performed either for the soul of a dead person or for wordly ends, such as the downfall of an enemy or success in a court case.
عدد *ɛadad* /n pl *ʃaɛdaad*/ **1** number, aggregate. *ɛadad il-laɛɛiiba ʃarbaɛa* the number of players is four. ‖*sifr il-ɛadad* the Book of Numbers. **2** numeral. *xud-lak ɛadad* choose a number.. *ʃil-ʃaɛdaad il-fardiyya wiz-zawgiyya* odd and even numbers. **3** issue. *ʃawwil ɛadad min gariidit il-ʃahraam* the first number of el-Ahram newspaper.
عددى *ɛadadi* /adj/ numerical, arithmetical.
عديد *ɛadiid* /adj/ **1** numerous. **2**↑ /in constr/ multi-, poly- (in compounds). *ɛadiid il-istiɛmalaat* multi-purpose. — /n/ **3** lamentation for the dead.

عدّاد ʕaddaad /n pl -aat/ meter. *ʕaddaad kahraba* electricity meter. *ʕaddaad taks* taximeter.

تعداد taʕdaad /n/ computation. *taʕdaad is-sukkaan* census.

اتعدّ ʔitʕadd /vi/ to be counted. - iva *mitʕadd*.

عدّد ʕaddid **1** /vt/ to enumerate. *miʃ laazim tiʕaddid-li mazayaa-ha* you need not enumerate its advantages to me. **2** /vi/ to wail or lament (over the death of s.o.) enumerating the virtues of the deceased. - vn *taʕdiid*; ava *miʕaddid*.

معدّدة *miʕaddida* /n pl -aat/ hired female mourner.

اتعدّد ʔitʕaddid /vi/ **1** to become numerous, multiply, proliferate. **2** to be enumerated. **3** (impersonal) passive of ʕaddid 2. *ʔil-ʕagaayiz ma-yitʕaddid-ʃ ʕaleehum* old people are not to be lamented (when they die). - vn *taʕaddud*; ava/iva *mitʕaddid, mutaʕaddid*.

متعدّد *mutaʕaddid*↑ /adj */ **1** various, varied. *ʕala mustawayaat mutaʕaddida* at various levels. **2** numerous. *mutaʕaddid iṣ-ṣuwar* in multiple copies. *mutaʕaddid id-daragaat* multi-grade.

أعدّ ʔaʕadd /vt/ to prepare. *yiʕidd' muḥaḍraat-u* he prepares his lectures. - vn *ʔiʕdaad*; ava *muʕidd*; pva *muʕadd*.

إعدادى ʔiʕdaadi /adj/ **1** preparatory. *ʔil-maʃruuʕ lissa fil-marḥala l-ʔiʕdadiyya* the project is still in the preparatory stage. ‖*madrasa ʔiʕdadiyya* school for children of the 12-15 age group, junior high school. **2** pertaining to junior high school. *ʃihaada ʔiʕdadiyya* junior high school certificate. *huwwa fiṣ-ṣaff il-ʔawwil il-ʔiʕdaadi* (or *fi-ʔuula ʔiʕdaadi*) he's in the first year of junior high school.

الإعداديّة *ʔil-ʔiʕdadiyya* /n/ the junior high school certificate. *huwwa fil-ʔiʕdadiyya* he's in the last year of junior high school.

معدّات *muʕiddaat* /pl n/ equipment.

استعدّ ʔistaʕadd /vi/ to prepare oneself, get ready. *dabbar nafs-u wi-staʕadd' l-kull^{a} ḥaaga* he settled his affairs and prepared for everything. *ʔiza kunt^{a} ʕawiz-ni ʔaagi maʕaak ʔana mustaʕidd* if you want me to come with you I'm ready and willing. ‖ *ʔistaʕidd [athl]* get set! as in *xud makaan-ak - ʔistaʕidd - gary* on your mark, get set, go! - vn *ʔistiʕdaad*; ava *mustaʕidd, mistiʕidd*↓.

استعداد *ʔistiʕdaad* /n/ **1** readiness, preparedness. **2** capability, potential, propensity. **3** susceptibility, predisposition. — *ʔistiʕdadaat* /pl n/ **4** preparations.

ع د ر see ع ز ر : *ʔil-ʕadra*

ع د س

عدس ʕads /coll n/ lentil(s). ‖*ʕads abu gibba* unhulled lentils. - *ʔil-ʕads illi ḍarab il-ḥamaam ʕala ʕeen-u [vendor's cry]* ≈ lentils far tastier than pigeon! - *ʔilli ma-yiʕraf-ʃ' yʿuul ʕads* he who doesn't know says it's lentils (of people who judge only by appearance).

عدسايّة ʕadsaaya /unit n, pl -aat/ a lentil.

عدسة ʕadasa /n pl -aat/ lens.

ع د ل

عدل ʕadal^{1} *(i)* /vt/ **1** to set straight, put properly in place. *ʔiʕdil il-ḥaaga makan-ha* put the things properly in place! *ʕadalit in-naḍḍaara* she set her glasses straight. **2** to set to rights, reform. *ḥa-tiʕdil il-malakoot* do you think you can set the world to rights? *yaama nifs-i ʔaxd-u gooz ʔaḍlaam - ḍalam yiʕdil-u w-ḍalam yiʕwig-u* how often I've itched to give him a couple of slaps - one to bring him to his senses and one to knock him silly! ‖*ga-lha l-ʕariis illi ḥa-yiʕdil ḥal-ha* a suitor has come along who is just right for her. **3** /vi/ to be just. *ʔilli yuḥkum laazim yiʕdil* he who stands in judgement should himself be just. - vn *ʕadl, ʕadalaan*; ava *ʕaadil*; pva *maʕduul*.

¶ *ʕadal ʕan* to reconsider. *ʔiʕdil ʕan raʔy-ak* reconsider your opinion. - vn *ʕuduul ʕan*.

عدل ʕadl /n/ **1** justice. ‖*nihayt-u faḍl' w-ʕadl* ≈ everything's fair and square. **2** /adj invar and pl *ʕuduul/ [Isl law]* meeting all requirements (of a witness). *tigiib raagil ʕadl yiḥad ʕal-ʕaḍd* find an honourable man to witness the contract.

عدلة ʕadla /inst n, pl -aat/ an adjustment.

عدل ʕadal^{2} /n/ someone or something exactly suitable or fitting. *laḍa ʕadal-u fil-waẓiifa di* he found just what suited him in that job. - /adjectivally/ *ʔil-gawaaza l-ʕadal* an ideal marriage.

عدل ʕidil /adj */ **1** straight. *xaʃaba ʕidla* a straight piece of wood. **2** /also pl *ʕadaala/* proper, decent (sometimes with a sarcastic implication). *huwwa ʕaawiz sukkaan ʕidliin fil-ʕimaara* he wants (to have) nice people living in the building. *duxt is-sabaʕ doxaat ʕaʃaan ʔalaaḍi ḥaaga ʕidla* I went to endless trouble to find something even half-way decent. *huwwa-nta lli ʕidil* you talk as if you are beyond criticism! ‖ *ʔiftikir ḥaaga ʕidla* change the subject to something nicer. - /adverbially/ *ʔuḍʕud ʕidil* sit properly! *ʔimʃi ʕidil yiḥtaar ʕadiww-ak fiik [prov]* keep to the straight and narrow and your enemy will be baffled as to how to harm you.

أعدل ʔaʕdal /el/ **1** more/most straight, correct etc. **2** more/most just.

عدالة ʕadaala /n/ justice.

عديل ʕadiil /n pl *ʕadaayil/* husband of a wife's sister.

اتعدل ʔitʕadal /vi/ **1** to correct one's position, straight-

en oneself. *ʔitɛadal fi-qaɛdit-u* he seated himself more comfortably. **2** to mend one's ways, behave better. *ma-titɛidil baqa* it's high time you behaved yourself! **3** to be straightened, be set right. - ava/iva *mitɛidil*.

انعدل *ʔinɛadal* = *ʔitɛadal*. - ava/iva *minɛidil*.

عدّل *ɛaddil* /vt/ **1** to put right, set straight. *ɛaddil hiduum-u* he straightened his clothes. ‖*rabb-i-na yɛaddil-haa-lak* may our Lord put things right for you! **2** to amend, modify. *ʔil-qawaniin illi ɛaddilit il-qawaniin is-sabqa* the laws that amended the previous laws. — /vi/ **3** to point out and correct faults. *ma-ħadd'-ʃ yiqdar yiɛaddil ɛalee* no one can find fault with him, he is beyond reproach. *ɛaddilna ɛat-tarkibaat illi kaan ʃakl-a-ha wiħiʃ* we went over and made improvements on the badly finished fixtures. - vn *taɛdiil*; ava *miɛaddil*; pva *muɛaddal*.

تعديل *taɛdiil* /n pl *-aat*/ amendment, modification. *taɛdiil wizaari* cabinet reshuffle.

معدّلة *miɛaddila* /adj */ *[freq deris]* clever and industrious. *ʔil-kuusa ya mɛaddila [vendor's cry]* ≈ zucchini for the little home-maker!

معدّل *muɛaddal* /n pl *-aat*/ average, average rate. *muɛaddalaat il-ʔintaag* the production rates. *muɛaddalaat il-ħaraara f-maṣr* the average temperatures (at given times or places) in Egypt.

اتعدّل *ʔitɛaddil* /vi/ to become or be made straight or correct. - ava/iva *mitɛaddil*.

عادل *ɛaadil* /vt/ **1** to be equivalent to. *ʔis-sanawiyya l-ɛamma ʔaw ma yɛadil-ha* the secondary school certificate or its equivalent. **2** to neutralize, counterbalance, compensate for. - vn *miɛadla*; ava *miɛaddil*.

معادلة *muɛadla* /n pl *-aat*/ *[math]* equation.

اتعادل *ʔitɛaadil, taɛaadal*† /vi/ **1** to come out even, draw. *ʔil-matʃ intaha b-taɛaadul* the match ended in a draw. **2** to break even. - vn *taɛaadul*; ava *mitɛaadil*.

اعتدل *ʔitɛadal* /vi/ **1** to become straight or upright. **2** to become moderate. - vn *ʔitɛtidaal*; ava *mitɛtidil, muɛtadil*.

معتدل *muɛtadal* /interj/: *muɛtadal marʃ* common mishearing of the command *muɛtaadan marʃ* ready, march!

استعدل *ʔistaɛdil* **1** /vt/ to straighten out. *ʔis-samkari staɛdil if-faseeh* the panel beater straightened the chassis. - a passive form identical with the active form occurs in the proverb *ʔil-maɛwuug yistaɛdil ɛas-sindaal* (the crooked may be straightened on the anvil) ≈ nothing is so bad it cannot be set right. **2** /vi/ *[rur, euphem]* to wash the pubic region. - vn *ʔistiɛdaal*; ava/pva *mistaɛdil*.

ع د م

عدم *ɛidim (a)* **1** /vt/ to be deprived of. *ɛidim illi ħilt-u* or *ɛidim illi waraa wi-lli quddaamu* he lost everything. ‖*(min) yadd' ma-niɛdam-ha [women in trad soc]* formula of thanks for food or drink handed one. - *ʔin ʃa-lla tiɛdamii-ni la-... [women in trad soc]* adjuration urging acceptance, as in *ʔin ʃa-lla tiɛdamii-ni la-tifrabii* ≈ I pray that I may die if you do not drink it! - *ɛidim il-ɛeen* ≈ to suffer, go through hell, as in *ʔin ʃa-lla yiɛdam ɛeen-u [women in trad soc]* may he suffer! *ʔir-raagil il-ɛadmaan il-ɛeen da* (1) *[women in trad soc]* ≈ that bastard of a man! (2) that poor, suffering man! *ʔana ɛdimt' ɛeen-i w-ɛafyit-i ɛaleeku* ≈ I've worked myself to the bone for you. **2** /vi/ to become rickety or decrepit, become worn out and useless. *ʔig-gazma ɛidmit* the shoes are worn out. *ʔil-makana ɛidmit* the machine is on its last legs. - vn *ɛadam*; ava *ɛaadim*.

عدم *ɛadam' (i)* /vt/ **1** to deprive of. *ɛadamuu-ha l-ɛafya* they drained her of her health. **2** to wear out, exhaust, incapacitate. *ḍarabuu-ni lamma ɛadamuu-ni* they beat me almost to death. - vn *ɛadamaan*; ava *ɛaadim*; pva *maɛduum*.

عدم *ɛadam²* /n/ lack, non-existence. *xalaq-u mil-ɛadam* he created it from nothing. *fi-ɛadam wuguud il-mudiir* in the absence of the director. *ɛadam il-ʔahliyya* ineligibility. *ɛadam il-ʔimkaniyya* impossibility. ‖*ħalt-u ɛadam* he's in a bad way. - *ɛadam il-muʔaxza* excuse me. - *da huwwa ɛadam-u [women in trad soc]* ≈ he hasn't a hope in hell!

عادم *ɛaadim* **1** /n pl *ɛawaadim*/ waste, waste material. *ʔil-quṭn iṭ-ṭibbi b-yitɛimil min ɛaadim il-quṭn* cotton wool is made from cotton waste. *yilimmu ɛawaadim it-tigaara* they gather commercial waste. ‖*masuurit ɛaadim* exhaustpipe. **2** /adj/ insufficiently salted, insipid, tasteless. - also *ɛaadib*.

معدوم *maɛduum* /adj */ lacking in. *maɛduum if-faxṣiyya* lacking in personality.

عدمان *ɛadmaan* /adj/ worn out, exhausted.

عديم *ɛadiim* /adj/ lacking. *ɛadiim if-fabah* peerless. *ɛadiim it-taṣarruf* incapable of conducting oneself properly, gauche. *ɛadiim it-tarbiyya* ill-mannered. ‖*ɛadiim il-ʔaṣl* unprincipled.

اتعدم *ʔitɛadam* /vi/ **1** to be deprived. *ʔin ʃa-lla m-atɛidim-ʃ' minku [women in trad soc]* may I not be deprived of you! (expressing gratitude). **2** to be worn out, be exhausted, be incapacitated. - iva *mitɛidim*.

انعدم *ʔinɛadam* = *ʔitɛadam*. - vn *ʔinɛidaam*; iva *minɛidim*.

أعدم *ʔaɛdam* /vt/ **1a** to execute, put to death (e.g., a

prisoner). **1b** to destroy (animals). **2** to destroy completely. *ʔaɛdam il-wasiiqa* he destroyed the document. - vn *ʔiɛdaam*; ava *muɛdim*; pva *muɛdam*.

إعدام *ʔiɛdaam* /n/ **1** destruction, annihilation. **2** execution, capital punishment.

معدم *muɛdim* /adj */ destitute, poverty-stricken.

ع د ن [1]

معدن *maɛdan* /n pl *maɛaadin*/ **1** metal. *ʔasnaan maɛdan* metal teeth. ‖ *ʔil-ʔaʃya maɛdan* everything's perfect! - *ʔin-naas maɛaadin* people come in all sorts. **2** *[obsol]* half a piastre, a half-piastre coin.

معدنى *maɛdani* /adj/ **1** metal, metallic. *siluuk maɛdaniyya* metal wires. **2** mineral. *mayya maɛdaniyya* mineral water.

عدّن *ɛaddin* /vi/ to mine. - vn *taɛdiin*; ava *miɛaddin*.

ع د ن [2]

عدن *ɛadan* /prop n/ Aden. ‖ *gannit ɛadan* paradise.

ع د و

عدى *ɛada* [1] *(i)* /vt/ to infect, affect by contagion. *ʔil-ʔaxlaaq il-wiḥʃa tiɛdi* bad manners are contagious. - vn *ɛadwa*; ava *ɛaadi*; pva *maɛdi*.

عدوى *ɛadwa* /fem n/ infection, contagion. *xad ɛadwa* he caught a disease.

عدوان *ɛidwaan, ɛudwaan* /n/ hostility, enmity, aggressiveness. *ʔil-ɛidwaan is-sulaasi* the tripartite aggression (against Egypt in 1956).

عدوانيّة *ɛudwaniyya* = *ɛidwaan*.

عدا *ɛada* [2]*: maa ɛada* see *maa*.

العدوى *ʔil-ɛadawi* /prop n/: Sidi el-Adawi, a Muslim saint commonly invoked by those searching for lost property. *ya salaam ya ɛadawi wi-lli ylaqii lu l-ḥalaawa* O Adawi! a reward for the one who finds it.

عدوّ *ɛadiww* /n* and pl *ʔaɛaadi, ɛida, ʔaɛda*/ enemy. ‖ *ɛadiww-ak* or *ʔil-ɛadiwwiin (wi-lli yikrah-ak)* ≈ may it happen to your enemy! or may it happen to your enemies (and those who hate you)! (invocation against evil, used when something unpleasant is mentioned), as in *ya feexa ʔiftikri ḥaaga ɛidla - ʔin ʃa-lla l-ɛadiwwiin wi-lli yikrahuu-ki* don't talk of such awful things, woman - may they befall only your enemies and those that hate you! - *ma-ysurr'-ʃ la ɛaduw wala ḥabiib* (it gives joy to neither foe nor friend) ≈ it's horrible, it's awful, as in *baqa ḥal-ha ma-ysurr'-ʃ la ɛaduw wala ḥabiib* she got into an appalling state, *miʃ kifaaya ʔinnu malṭuuɛ il-laṭɛa l-mihabbiba ḍi-lli ma-tsurr'-ʃ la ɛaduw wala ḥabiib* isn't it enough that he should be so cruelly abandoned? - *ɛadiww if-ʃams* albino.

عداوة *ɛadaawa* /n/ enmity, hatred, hostility.

عادى *ɛadi-: ɛadii-k* /fem *ɛadii-ki*, pl *ɛadii-ku(m)*/ ≈ may it happen to your enemy! (invocation against evil, used when something unpleasant is mentioned).

اتعدى *ʔitɛada* /vi/ to be infected. *xalli-bn-ak ma-yixtilit-ʃ' b-ʔawlaad-i la-yitɛidu minnu* don't let your son mix with my children, lest they be infected by him. - iva *mitɛidi*.

انعدى *ʔinɛada* = *ʔitɛada*. - iva *minɛidi*.

عدّى *ɛadda* /vt/ **1** to cross. *tiqdar tiɛaddi n-niil ɛoom* can you swim across the Nile? *ḥa-nɛaddi ʃ-ʃaariɛ bi-taks' leeh* why should we take a taxi just to cross the street? **2** to cause to pass through. *ɛaddi l-ʔastik min il-bakya* pass the elastic through the runner! — /vi/ **3** to pass, go past. *ʔil-leela ɛaddit* the night passed. *ʔir-ruṣaaṣa ɛaddit min il-xaʃab* the bullet penetrated the wood. *ɛaddeet mil-ɛarabiyya* I overtook the car. *ɛaddeet ɛal-baqqaal* I passed the grocer's. *ɛaddeet ɛal-baqqaal ʔaaxud minnu ʃwayyit ḥagaat* I passed by at the grocer's to get a few things from him. ‖ *ɛaddit ɛalee* the point was lost on him. - vn *taɛdiyya*; ava/pva *miɛaddi*.

معدّية *miɛaddiyya* /n pl *-aat, maɛaadi*/ **1** small footbridge. **2** ferry.

المعادى *ʔil-maɛaadi* /prop n/ el-Ma'adi, a garden suburb about seven miles to the south of the centre of Cairo.

معدّاوى *miɛaddaawi* /n pl *-yya*/ ferryman.

اتعدّى *ʔitɛadda* /vt/ **1** to exceed, surpass, go beyond. *mihnit-u ma-titɛaddaa-ʃ il-ʔaati* his job consists of nothing but the following. — /vi/ **2** to be crossed, be passed. **3** to commit a transgression or offence, trespass. *ʔitɛaddu ɛala ḥaqq-i* they trespassed on my rights. ‖ *ʔil-mitɛaddi nadmaan [prov]* the aggressor will come to regret his aggression. - vn *taɛaddi*; ava/iva/pva *mitɛaddi*.

عادى *ɛaada* [1] /vt/ **1** to treat with hostility, treat as an enemy. *niqṣir if-farr' la tɛadii-ni wala ʔaɛadii-k* let's spite the Devil, and not be enemies. *ḥ-anṣur-ak ɛala lli yɛadii-k* I'll stand with you against your enemies. **2** to make an enemy of (s.o.). *min naṣaḥ ig-gaahil ɛadaa [prov]* give advice to someone ignorant and you will only make an enemy of him. - vn *muɛadaah, miɛadiyya*; ava *miɛaadi*.

اتعادى *ʔitɛaada* /vi/ **1a** to be treated with animosity. **1b** to be made an enemy. **2** to become enemies. - ava/iva *mitɛaadi*.

أعدى *ʔaɛda* /vt/ to infect. - ava *muɛdi*.

معدى *muɛdi* /adj/ infectious, contagious.

اعتدى *ʔiɛtada* /vi/ **1** to make an attack. *ʔiɛtadu ɛalee*

biq-qarb they attacked him with blows. **2** to assault sexually. *ʃiɛtada ɛal-bint* he ravished the girl. - vn *ʃiɛtida, ʃiɛtidaaʃʰ*; ava *miɛtidi, muɛtadiʰ*.
اعتداء *ʃiɛtidaaʃ* /n pl *-aat/* attack. ‖ *ʃil-iɛtidaaʃ issulaasi* the tripartite aggression (against Egypt in 1956).

ع ذ ب see ع د ب and [3] ع ز ب and [4] ع ز ب

ع ذ ر see ع ز ر

ع ذ ل see [2] ع ز ل

[1] ع ر ب
العرب *ʃil-ɛarab* /coll n/ the Arabs.
عربي *ɛarabi* **1** /adj pl *ɛarab*/ **1a** Arab, Arabian, Arabic. ‖ *ʃit-tariix il-ɛarabi* dating according to the Islamic calendar, Hijra dating. **1b** bedouin. — /n/ **2a** /pl *ɛarab*/ male Arab. ‖ *ʃibn[a] ɛarab* (1) an Arab. (2) stalwart fellow, fine man. **2** /pl *ɛurbaan, ɛarab*/ a bedouin. **3** /no pl/ Arabic, the Arabic language. *ʃil-ɛarabi l-faṣiiḥ* literary Arabic. ‖ *bil-ɛarabi* in plain language.
عربيّة *ɛarabiyya[1]* /n/ **1** /pl *-aat*/ **1a** female Arab. **1b** bedouin woman. **2** *ʃil-ɛarabiyya* the Arabic language.
عروبة *ɛuruuba* /n/ Arabism, Arab identity.
عرّاب *ɛarraab* /n */ godfather.
أعرابي *ʃaɛraabi* /pl *ʃaɛraab*/ **1** /adj/ bedouin. **2** /n/ a bedouin.
أعرابيّة *ʃaɛrabiyya* /n pl *-aat*/ a bedouin woman.
عرّب *ɛarrab* /vt/ **1** to translate into Arabic. **2** to Arabicize. - vn *taɛriib*; ava *muɛarrib*; pva *muɛarrab*.
اتعرّب *ʃitɛarrab* /vi/ **1** to be translated into Arabic. **2** to be Arabicized. **3** to affect the manners of an Arab. - iva *mitɛarrab*.

[2] ع ر ب
عربيّة *ɛarabiyya[2]* <cf T *araba*> /n pl *-aat, -aat*/ wheeled vehicle (of any description). *ɛarabiyya ʃugra* a taxi. *ɛarabiyya karru* animal-drawn cart. *ɛarabiyyaat qaṭr* railway coaches.
عربجي *ɛarbagi* <T *arabacı*> /n pl *-yya*/ **1** driver of any animal-drawn vehicle. **2** uncouth or foul-mouthed person. ‖ *ʃaxlaaq ɛarbagiyya* uncouth manners.
عرباتي *ɛarabaati* /n pl *-yya*/ *[obsol]* repairer of carts.
عربخانة *ɛarbaxaana* /n pl *-aat*/ *[obsol]* shed for housing carts.

[3] ع ر ب
عربة *ɛarba* /n pl *ɛurab*/ *[mus]* **1** quarter tone. **2** device for adjusting the tone of the strings of the *qanuun* (see Pl.J, 25).

ع ر ب د
عربد *ɛarbid* /vi/ to behave in a rowdy or riotous way, become rowdy, run wild. - vn *ɛarbada*; ava *miɛarbid*.
عربيد *ɛarbiid* /adj */ rowdy.
اتعربد *ʃitɛarbid* /vi/ (impersonal) passive of *ɛarbid*. *yaama l-beet da tɛarbid fii* this house has seen a lot of hooliganism. - iva *mitɛarbid*.

ع ر ب ن
عربون *ɛarbuun* /n pl *ɛarabiin*/ down payment, deposit. *b-aaxud ɛarbuun xamsiin fil-miyya* I take fifty percent deposit.
عربن *ɛarbin* /vi/ to pay a deposit, make a down payment. - vn *ɛarbana*; ava *miɛarbin*.
اتعربن *ʃitɛarbin* /vi/ (impersonal) passive of *ɛarbin*. *ʃik-kursi da mitɛarbin ɛalee* a deposit has been paid on that chair. - iva *mitɛarbin*.

ع ر ج
عرج *ɛarag (u)* /vi/ to limp, hobble. - vn *ɛarag*; ava *ɛaarig*.
عرجة *ɛarga* /n/ **1** a limp. **2** zigzag design.
أعرج *ʃaɛrag* /adj, fem *ɛarga*, pl *ɛurg*/ lame.
عريجة *ɛariiga* /n/ zigzag design.
المعراج *ʃil-miɛraag* /n/ *[Isl]* Muhammad's ascension to the seven heavens.
عرّج *ɛarrag* /vt/ to make (s.th.) wavy, undulating or uneven. *ɛarragit il-qaṣṣa* she cut (it) unevenly. *ʃarḍ[i] mɛarraga* undulating land. - vn *taɛriig*; ava/pva *miɛarrag*.
اتعرّج *ʃitɛarrag* /vi/ to be made wavy, undulating or uneven. - iva *mitɛarrag*.
تعرّج *taɛarrugʰ* /n pl *-aat*/ zigzag, undulation, unevenness.

ع ر ج ن
عرجون *ɛarguun* /n pl *ɛaragiin*/ date stalk. ‖ *ʃanfaf mil-ɛarguun* drier than a date stalk.

[1] ع ر ر
عرّ *ɛarr[i] (i)* /vt/ to disgrace, shame, dishonour. *da-nta tɛirr[i] balad* you are the type that brings shame on every one around you. - vn *ɛararaan*; ava *ɛaarir*; pva *maɛruur*.
عرّة *ɛirra* /n/ slight, insult, disgrace. *ya ɛirrit in-nisa* you disgrace to womanhood! - /adjectivally/ *ḥaaga ɛirra* a disgraceful thing.

اتعرّ ʔitɛarr /vi/ **1** to be disgraced, be shamed, be dishonoured. **2** to feel ashamed, feel disgraced. - ava/iva *mitɛarr*.

انعرّ ʔinɛarr = ʔitɛarr. - ava/iva *minɛarr*.

استعرّ ʔistaɛarr /vi/ to be ashamed. *kaan mistaɛarr' min huduum-u* he was ashamed of his clothes. - ava *mistaɛarr*.

ع ر ر [2]

عرّ ɛarr[2] *(u)* /vi/ *[abus]* to go about, wander about. *kunt bi-tɛurri feen ya mara miṣ-ṣubḥ* where the hell have you been tramping about all this time, woman? - vn *ɛararaan, ɛarr*; ava *ɛaarir*.

ع ر س [1]

عروس ɛaruus↑ = ɛaruusa. ‖ *bitingaan il-ɛaruus* variety of long egg-plant. - *ɛaruus il-baḥr il-ʔabyaq* the Bride of the Mediterranean (epithet of Alexandria).

عروسة ɛaruusa /n pl *ɛaraayis/* **1a** bride, bride-to-be. ‖ *ɛaruusit in-niil* 'the bride of the Nile'; a maiden said to have been cast into the Nile in ancient times as a sacrifice at the height of the flood; later, a life-sized doll or column of earth whose casting into the Nile was one of the traditional ceremonies attending the cutting of the dam that separated the Nile from the Cairo Canal (see *xaliig*). - *ɛaruusit il-baḥr* (1) mermaid. (2) cowfish. - *zayy' ʔumm il-ɛaruusa - faḍya w-maʃbuuka [prov]* like the bride's mother - idle and busy doing nothing. - *ɛaruusit iz-zaar* woman possessed by a demon for whom a *zaar* ritual is performed. - *ɛaruusit il-burquɛ* decorated part of a woman's veil. **1b** marriageable woman. **2** affectionate form of address or reference to a young girl. **3a** doll. ‖ *ɛaraayis il-muulid* sugar dolls clad in bright paper dresses sold during the celebrations for the birthday of the Prophet Muhammad. **3b** puppet, marionette. **4** whipping post. **5** *[auto]* upright projection on a bumper/fender, overrider. **6** vertical axle of the main cog of a *saqya* (see Pl.E, 4). **7** gold crescent on a necklace.

عروسى ɛaruusi /adj invar/: *ṭabla ɛaruusi* a style of drumming used in *zaar* ceremonies. *ṭaara ɛaruusi* large tambourine without cymbals, *zaar* word denoting the *daff*.

عريس ɛariis /n pl *ɛirsaan/* **1** bridegroom, future husband. **2** suitor. **3** eligible young man.

ع ر س [2]

عرسة ɛirsa /n pl *ɛiras/* **1** weasel. ‖ *ʔilli yxaaf mil-ɛirsa ma-bi-yrabbii-ʃ katakiit [prov]* he who fears the weasel doesn't raise chicks. **2** malignant and vicious person.

ع ر س [3] see ع ر و س : *ɛaruus*

ع ر ش

عرش ɛarʃ /n pl *ɛuruuʃ/* throne.

عرش ɛarʃ /n pl *ɛuruuʃ, ɛirʃaan/ [rur]* ceiling.

عرس ɛirʃ /n pl *ʔaɛraaʃ, ɛuruuʃ/* **1** leafy tops of root vegetables. **2** cluster of overhanging foliage.

عريش ɛariiʃ /n/ **1** /pl *ɛuruuʃ/* horizontal trellis. **2** /pl *ɛirʃaan/* **2a** shaft and attached harness (of a cart). **2b** coupling unit (of a truck).

العريش ʔil-ɛariiʃ /prop n/ el-Arish, a town on the Mediterranean coast of Sinai.

عريشة ɛariiʃa /n pl *ɛaraayiʃ/* **1** animal pen in a field. **2** trellis supporting a climbing plant.

عرّش ɛarraʃ /vt/ **1** to trim, guillotine (uneven edges of paper, books). **2** to train (a plant) to grow up a trellis. **3** to enclose or roof over with trellises supporting climbing plants. - vn *taɛriiʃ*; ava/pva *miɛarraʃ*.

تعريشة taɛriiʃa /n pl *taɛariiʃ/* trellis supporting climbing plants, bower, arbour.

معرّش miɛarraʃ /adj */ fine-looking, well-dressed. *ʔimʃi miɛarraʃ wala timʃi mikarraʃ [prov]* ≈ it's more important to dress well than to eat well.

اتعرّش ʔitɛarraʃ /vi/ passive of *ɛarraʃ*. - iva *mitɛarraʃ*.

ع ر ص [1]

عرص ɛarṣ /n pl *-aat/* **1** pimp. **2** *[abus]* stinker, swine.

عرّص ɛarraṣ /vi/ **1** to pimp, procure. *ɛarraṣ lil-ɛaḥba* he pimped for the prostitute. **2** to ignore improprieties wilfully, turn a blind eye. *bi-yɛarraṣ ɛala lli bi-yɤiibu* he turns a blind eye when people are absent. - ava *miɛarraṣ*.

معرّص miɛarraṣ /n */ **1a** pimp, procurer. **1b** lecher. **2** unscrupulous person.

معرّصاتى miɛarraṣaati = miɛarraṣ.

ع ر ص [2]

عرصة ɛarṣa /n pl *-aat, ɛuraṣ/* **1** thick disc of pottery forming the floor of the baking chamber of a mud oven, (loosely) the floor of a mud oven (see Pl.C, 9). **2** baking chamber of a mud oven (see Pl.C, 8).

ع ر ض

عرض ɛaraḍ' *(i)* /vt/ **1** to offer, present, show. *ɛaraḍu ɛalayya· waẓiifa* they offered me a job. *ɛaraḍu l-muttahamiin ɛaʃ-ʃaahid* they presented those accused to the witness. *ʔis-sinima di b-tiɛriḍ ʔaflaam ʔagnabiyya* that cinema shows foreign films. **2** *[abus]* to afflict (of illness). *ʔeeh illi ɛaraḍ-ak* whatever (dreadful illness) has attacked you?! — /vi/ **3** to crop up, occur.

ʕaraḍit-lu mas∫ala ʕaṭṭalit-u something cropped up and delayed him. ‖ ∫agaaza ʕarḍa contingency leave. - vn ʕarḍ; ava ʕaariḍ; pva maʕruuḍ.

¶ ʕaraḍ ʕan to turn away from, have nothing to do with. bi-yiʕriḍ ʕan if-fuʏl he deliberately avoids work.

عرض ʕarḍ[1] /n/ **1** /pl ʕuruuḍ/ show, presentation, display. ʕarḍ[i] ∫azyaa∫ fashion show. **2a** /pl ∫aʕraaḍ/ width, breadth. bil-ʕarḍ (1) widthwise, crosswise. (2) abreast. ‖ ɢumaaf ʕarḍ[a] ʕarḍeen double-width cloth (i.e. cloth woven 140 cm wide or more). - fi-ʕarḍ il-baḥr on the open sea. - warʔii-ni ʕarḍ[i] ɢafaa-k (or ktaaf-ak) let me see the back of you! - ḥa-yxalli ḥirt-ak ʕarḍ[i] w-ṭuul it will perplex you to the utmost. **2b** *[geog]* latitude. xaṭṭ[i] ʕarḍ line of latitude.

عرض ʕarḍ[2], ʕirḍ /n pl ∫aʕraaḍ/ honour. reputation. ‖ ∫ana f-ʕarḍ-ak I beseech you!

عرضى ʕarḍi /adj/ **1** widthwise, transverse. **2** *[geog]* latitudinal.

عارض ʕaariḍ[1] /n pl ʕawaariḍ/ **1** illness. ga-k ʕaariḍ ≈ a pox upon you! ʕalɢa tgib-lu l-ʕaariḍ a beating that will really knock the stuffing out of him. **2** /n */ demonstrator, exhibitor. ʕaariḍ ∫aflaam film projectionist.

عارضة ʕarḍa /n pl -aat, ʕawaariḍ/ crossbar, crossbeam. ʕarḍit goon crossbar of a goal. ʕarḍit nool breast beam of a loom. ʕarḍit ṣaari *[naut]* gaff.

عارضة ʕaariḍa /n pl -aat/ female demonstrator. ʕaariḍit ∫azyaa∫ fashion model, mannequin.

معروضات maʕruḍaat /pl n/ exhibits.

عرضة ʕurḍa: ʕurḍa li- exposed to, liable to, susceptible to. miɢaʕɢadiin-u fil-maktab ʕurḍa lil-ma∫aakil they are stationing him in the office to cope with the problems (that arise). ∫ig-guduur bi-tibɢa ʕurḍa liḍ-ḍaʕf the roots are liable to grow weak.

عرض ʕaraḍ[2] /n pl ∫aʕraaḍ/ **1** chance happening, accident. **2** symptom. ẓaharit ʕaleeha ∫aʕraaḍ il-ḥumma the symptoms of fever appeared on her.

أعرض ∫aʕraḍ[1] /el/ broader/broadest, wider/widest.

عروض ʕaruuḍ /n/ prosody.

عريض ʕariiḍ /adj pl ʕiraaḍ, ʕuraaḍ/ broad, wide. kurraat ʕariiḍ broad-leaved leeks. ṭumbaak ʕariiḍ coarse tobacco. ‖ ṭiwiil ʕariiḍ a great big (person). - ɢafaa ʕariiḍ he's dim-witted.

عريضة ʕariiḍa /n pl ʕaraayiḍ/ petition, application. ‖ ʕariiḍit daʕwa *[leg]* application for legal proceedings.

معرض maʕraḍ /n pl maʕaariḍ/ **1** display, exhibition. **2**↓ walk-round store.

اتعرض ∫itʕaraḍ /vi/ **1** to be offered, be presented, be shown. **2** to be stricken (by illness). - iva mitʕiriḍ.

عرّض ʕarraḍ /vt/ **1** to expose, make vulnerable. ʕarraḍ nafs-u lil-xaṭar he exposed himself to danger. makaan muʕarraḍ lis-sirɢa a place exposed to (the possibility of) theft. - /the literary passive form occurs in elevated speech/ ma-yuʕarraḍ-f[i] liḥ-∫ams it should not be exposed to the sun. **2** to broaden. niʕarraḍ il-xa∫ab we increase the breadth of the timber. - vn taʕriiḍ; ava miʕarraḍ; pva muʕarraḍ↑.

¶ ʕarraḍ bi- to make insinuations against. ∫inti bi-tʕarraḍi biyya are you making insinuations against me?

اتعرّض ∫itʕarraḍ /vi/ **1** to be exposed, be made vulnerable. ∫il-ma∫aakil illi b-atʕarraḍ laha the problems I face. bi-yitʕarraḍ ∫innu yiʕya ∫aw yisaafir he is exposed to the possibility that he may fall ill, or have to leave for somewhere else. **2** to be broadened. **3** to object, protest, stand in opposition. - vn taʕarruḍ; ava/iva mitʕarraḍ.

عارض ʕaariḍ[2] /vi/ to object, protest, stand in opposition. ḥadd[i] minnina yiqdar yiftaḥ ḥanak-u walla yʕaariḍ does any one of us dare to open his mouth or protest? - vn muʕarḍa; ava miʕaariḍ.

اتعارض ∫itʕaariḍ /vi/ to stand in contradiction, conflict. - vn taʕaaruḍ; ava mitʕaariḍ.

أعرض ∫aʕraḍ[2]: ∫aʕraḍ ʕan to turn away from, have nothing to do with. - vn ∫iʕraaḍ; ava muʕriḍ.

اعترض ∫iʕtaraḍ **1** /vt/ to stand in opposition to. ma-ḥadd[i]-∫ iʕtaraḍ-na no one stood in our way. **2** /vi/ to object, protest, stand in opposition. bi-yʕtiriḍ ʕala kalaam-ak he objects to what you say. - vn ∫iʕtiraaḍ; ava miʕtiriḍ, muʕtariḍ↑.

اعتراض ∫iʕtiraaḍ /n pl -aat/ opposition, objection, veto. ‖ ∫allahumma la-ʕtiraaḍ a formula used to disclaim any blasphemous intent in criticizing God's work, as in ∫ir-raagil da mʕarraṣ ∫allahumma la-ʕtiraaḍ the man's a swine, but God knows best!

اعرضّ ∫iʕraḍḍ /vi/ to become wide. - ava miʕriḍḍ.

استعرض ∫istaʕraḍ /vt/ **1** to show off with, make a display of. ma-tistaʕraḍ-f[i] ʕaḍalaat-ak ʕaleena don't try to use strongarm tactics with us. **2**↑ to review, go over and examine. ∫ir-ra∫iis istaʕraḍ ḥaras if-faraf the president reviewed the guard of honour. ḥa-nistaʕraḍ il-∫araa∫ di kull-a-ha we shall review all these opinions. **3a** to consider wide or thick. **3b** to select for width or thickness. - vn ∫istiʕraaḍ; ava mistaʕriḍ.

استعراضى ∫istiʕraaḍi /adj/ of the light variety type (of entertainment). firɢa stiʕraḍiyya a song and dance troupe. film istiʕraaḍi a musical-comedy film.

ع ر ض ح -

عرضحال ʕarḍaḥaal <cf T and P arzıhal from Arabic>

/n pl *-aat*/ **1** application or petition to a government department. **2** (also *ɛarḍaḥaal damɣa*) paper printed with a fiscal stamp, upon which an official application or petition is submitted.

عرضحالجى *ɛarḍaḥalgi* /n pl *-yya*/ professional self-employed writer of applications and petitions.

ع ر ط

عرط *ɛaraṭ (u)* /vt/ *[non-Cairene]* to chew, gnaw or bite pieces off (s.th.). *ɛaraṭ kuuz id-dura* he chewed the kernels off the corn cob. - vn *ɛarṭ*; ava *ɛaariṭ*; pva *maɛruuṭ*.

اتعرط *ʔitɛaraṭ* /vi/ *[non-Cairene]* to be chewed, gnawed or bitten off. - iva *mitɛiriṭ*.

ع ر ف [1]

عرف *ɛirif (a)* /vt/ **1** to know. *miin ɛaarif il-mustaqbal* who knows the future? *ma-yiɛraf-ʃ' (ḥaaga) fiṭ-ṭibb* he knows nothing about medicine. *ʔilli tiɛraf-u ʔaḥsan mi-lli ma-tiɛraf-uu-ʃ [prov]* better the devil you know than the devil you don't know. *ʔil-ʔugra l-maɛruufa* the known fare, the recognized fare. ‖ *ʔilli ma-yiɛraf-ak yighal-ak [prov]* ≈ to know you is to appreciate you. *- ɋoolit m-aɛraf-ʃ' raḥt-ik ya nafs-i [prov]* saying 'I don't know' is the easiest way out. *- (min il-)maɛruuf ʔinn ...* it is well known that ..., as in *maɛruuf ʔinnaha magnuuna* everyone knows she is crazy. **2** to discover, find out. *fiḍilt' raayiḥ gayy' min ɣeer fayda l-ḥadd' ma ɛrift innu ɛaayiz filuus* I went on coming and going to no avail till I realized that he wanted some money. *ruuḥ iɛraf mawaɛiid is-sinima* go and find out the cinema times. **3a** to recognize, distinguish. *ma-ɛrift'-kii-ʃ wi-nti labsa naḍḍaara* I didn't recognize you in your glasses. **3b** to show consideration for. *ʔil-ɛaalam hina ma-yiɛrafuu-ʃ baɛḍ* people here show no consideration for one another. ‖ *ma-yiɛraf-ʃ' ʔabuu* (1) he is completely impartial. (2) he would ride roughshod over (anyone, even) his father. **4** to experience, suffer. *ɛirift il-ɋaswa wil-ḥiɋd* I knew suffering and the malice of others. — /preverb/ **5a** to have the ability to. *tiɛraf tiɛuum* can you swim? **5b** to manage to. *ma-kanit-ʃ' ɛarfa tnaam* she couldn't get to sleep. ‖ *tiɛraf* could you (do)? would you mind (doing)? *tiɛraf tigib-li ɛilbit sagaayir* could you get me a packet of cigarettes? - vn *maɛrifa*; ava *ɛaarif*; pva *maɛruuf*.

¶ *ɛirif li-* to be conversant with, understand the workings of. *siib il-ḥanafiyya - ʔana ʔaɛraf laha* leave the tap - I know how to make it work. ‖ *ʔana mif ɛaarif luku baɋa* I'm sick of trying to make you out, I'm fed up with your ways.

معرفة *maɛrifa, miɛrifa* /n pl *maɛaarif*/ **1** knowledge, understanding. ‖ *bi-maɛrift-ak* at your discretion, as you think best. *- waziir il-maɛaarif [obsol]* Minister of Education. *- dayrit maɛaarif* encyclopaedia. **2** friendship. *kutr is-salaam yiɋill il-miɛrifa [prov]* ≈ excessive formality stunts the growth of friendship. **3** acquaintance(s), friend(s). *ʔiḥna maɛzumiin ɛand' naas maɛrifit-na* we're invited out to some acquaintances of ours. *luu ḥadd' maɛrifa fil-maḥkama* he knows someone at the court.

معروف *maɛruuf* **1** /n/ kind treatment, favour. *ma-yinsaa-ʃ il-maɛruuf ɣeer il-xasiis [prov]* only a base man forgets kindness shown him. *ʔil-maɛruuf sayyid il-ʔaḥkaam [prov]* kindness is the best guide in judging (others). ‖ *ʔiɛmil maɛruuf* please! *tiɛmil maɛruuf tigib-li gurnaal* would you be so kind as to get me a paper? *- xallii-ha bil-maɛruuf* let's keep things friendly! let's not quarrel! *- la bil-maɛruuf wala bil-matluuf* never (will I do what you say)! *- rabb-i-na ydiim il-maɛruuf* may Our Lord preserve this kindly feeling (that's between us), Lord preserve our friendship. **2** /prop n/ district in central Cairo between Champollion and Ramses Streets.

عرف *ɛurf* /n/ **1** custom, practice. *ḥasab il-ɛurf* according to custom. — /pl *ɛuruuf, ɛiraaf*/ **2** branch (of a tree). **3a** mane (of a horse). **3b** crest, comb (of a rooster). ‖ *ɛurf id-diik [bot]* love-lies-bleeding (Amaranthus candatus).

عرفى *ɛurfi* /adj/ according to custom. *ʔil-gawaaz il-ɛurfi* common-law marriage (the offspring of which are nevertheless regarded as legitimate). *maglis ɛurfi* (1) *[leg, obsol]* court of common law. (2) gathering of arbiters and interested parties to resolve a dispute. ‖ *ʔaḥkaam ɛurfiyya* martial law.

عرفة *ɛarafa* /prop n/ Arafa, a hill near Mecca. ‖ *yoom ɛarafa [Isl]* the ninth day of the pilgrimage month and the eve of the Greater Feast *(ʔil-ɛiid ik-kibiir)*, passed by the pilgrims on the hill of Arafa.

عرفات *ɛarafaat* = *ɛarafa*.

عريف *ɛariif* /n pl *ɛurafa*/ **1** assistant to the master of a *kuttaab*. **2** *[mil]* corporal. **3** /pl also *ɛurfaan*/ *[Chr]* cantor (elevated synonym for *miɛallim* in the Coptic church).

عرّاف *ɛarraaf* /n */ one who consults jinn or the stars about the future.

عرّيف *ɛarriif: ʔabu l-ɛarriif [deris]* know-all. *ɛaamil ʔabu l-ɛarriif* he's making out he knows everything.

معرفة *maɛrafa* /n pl *-aat*/ mane (of, e.g., a horse).

اتعرف *ʔitɛaraf [1]* /vi/ to be or become known, be recog-

nized. *ʕid-dukkaan itɛarafit* the shop became known. *ʕiṭ-ṭaalib iz-zaki b-yitɛirif ɛala ṭuul* a bright student gets noticed straight away. ‖ *ʕig-gawaab yitɛirif min ɛinwaan-u [prov]* (a letter is known by its address) ≈ you can tell a book by its cover. - iva *mitɛirif.*

انعرف *ʕinɛaraf*[1] = *ʕitɛaraf*[1]. - iva *minɛirif.*

عرّف *ɛarraf* /vt/ **1** to inform (s.o.) of (s.th.). *ʕil-garas bi-yɛarraf il-mutafarrigiin ʕinn il-faṣl it-taani ḥa-yibda* the bell informs the audience that the next act will begin. *ɛarraf-ni ṭariiq kanz*[i] *fil-ʕarḍ* he told me the way to a buried treasure. ‖ *ʕeef ɛarraf...* however should ... know? as in *ʕeef ɛarraf-ni ga walla laʔ* how do you expect me to know whether he has arrived or not. *ʕuskut - ʕeef ɛarraf-ak fil-mawḍuuɛ da* shut up! you don't know anything about the subject! **2** to introduce, acquaint. *ɛarraf-ni biihum* (or *ɛaleehum*) he introduced me to them. *laazim ʕaɛarraf-ku bi-blad-na* I must acquaint you with our country. **3** to define. - vn *taɛriif*; ava/pva *miɛarraf.*

تعريف *taɛriif* /n pl *-aat, taɛariif*/ definition.

تعريفة *taɛriifa* /n/ **1** /pl *-aat*/ classified list of charges, tariff. *taɛriifa gumrukiyya* customs tariff. *ʕutubiis taɛriifa muwaḥḥada* a flat-rate fare bus. **2** half a piastre, a half-piastre piece. *talaata taɛriifa* one and a half piastres. *xamsa taɛriifa* two and a half piastres. *ma-ɛandii-ʃ wala taɛriifa* I'm penniless.

اتعرّف *ʕitɛarraf* /vi/ **1** to be introduced, become acquainted, get to know. *ʕitɛarraft*[i] *b-gadaɛ* (or *ɛala gadaɛ) sawwaaq fit-turmaay* I became acquainted with a fellow who was a driver on the trams. **2** to make an identification. *ʕis-saayiḥ itɛarraf ɛala ʃanṭit-u* the tourist identified his suitcase. **3** to be defined. - vn *taɛarruf*↑; ava/iva *mitɛarraf.*

اتعارف *ʕitɛaarif* /vi/ to become mutually acquainted. - ava *mitɛaarif.*

اعترف *ʕiɛtaraf* /vi/ **1a** to confess, admit. *ʕiɛtaraft*[i] *bil-gariima* I confessed to the crime. *bi-yiɛtirif bi-ɢillit il-ʕadab* he admits to (his) rudeness. **1b** *[Chr]* to confess one's sins, go to confession. **2** to give recognition, show acknowledgement. *ʕiɛtarafu bil-ḥukuuma g-gidiida* they recognized the new government. *laazim tiɛtirif bil-gimiil* you must acknowledge a favour shown. *muɛtaraf bi-* recognized as valid, as in *ʕif-fihaada di muɛtaraf biiha f-maṣr* this certificate is recognized as valid in Egypt. - vn *ʕiɛtiraaf*; ava *muɛtarif, miɛtirif*; pva *muɛtaraf.*

اعتراف *ʕiɛtiraaf* /n pl *-aat*/ confession, admission. ‖ *ʕabb iɛtiraaf-i [Chr]* the priest to whom I make confession.

استعرف *ʕistaɛraf*↓ /vi/ **1** to identify, recognize. *ma-ḥadd*[i] *-ʃ istaɛraf ɛal-ism-i-da* no one recognized this name. **2** to get acquainted. *ʕistaɛraft*[a] *ɛala gadaɛ ṭayyib xad-ni mɛaa* I got to know a good fellow who took me with him. - ava *mistaɛraf.*

ع ر ف [2]

عرف *ɛaraf (u)* /vt/ to give (s.o.) a nose-bleed. *ḍarab-u w-ɛaraf-u* he struck him and made his nose bleed. - vn *ɛarfa*; ava *ɛaarif*; pva *maɛruuf.*

اتعرف *ʕitɛaraf*[2] /vi/ to be given a nose-bleed. - iva *mitɛirif.*

انعرف *ʕinɛaraf*[2] = *ʕitɛaraf*[2]. - iva *minɛirif.*

ع ر ق

عرق *ɛiriq (a)* /vi/ to sweat, perspire. *kunt*[i] *f-ɛizz if-ʃita ʕaɛraq zayy*[i] *lamma ʕakuun mistaḥammi* I used to sweat in the depths of winter just as I do when I've had a bath. - vn *ɛaraq*; ava *ɛarqaan.*

عرق *ɛaraq* /n/ **1** sweat, perspiration. *bid-damm*[i] *wil-ɛaraq wid-dumuuɛ* with blood, sweat and tears. *banaa b-ɛaraq-u* (or *bi-ɛaraq gibiin-u*) he built it with the sweat of his brow. *ɛaraq il-ɛafya* ≈ may your perspiration be the sign of returning health (said to a sick person who is perspiring)! *baqa ɛaraq-u maraq-u* he became very embarrassed. **2**↓ payment for labour or share given to one involved in a small transaction. *ʕig-gammaala b-yaxdu ɛaraq-hum ɤalla w-dura* the camel drivers get their cut in wheat and maize. **3** (also *ɛaraq balaḥ*) arrack, colourless spirit made from dates, (loosely also) ouzo, raki.

عرقى *ɛaraqi* /n/ arrack, colourless spirit made from dates, (loosely also) ouzo, raki.

عرقيّة *ɛaraqiyya* /n pl *-aat*/ *[obsol]* cotton skullcap, usually worn under turbans and other headgear.

عرق *ɛirq* /n pl *ɛuruuq*/ **1** vein. *xadt*[i] *ḥuqna fil-ɛirq* I had an intravenous injection. ‖ *ɛirq in-nisa* sciatica. *-ɛirq*[i] *gamb*[i] *widn-u-hum ma-yḥibb*[i] *-ʃ miraat ibn-u-hum [prov]* (a vein next to their ears doesn't like their daughter-in-law) ≈ mothers can never bring themselves to like their daughter-in-law. **2** tendon, sinew. **3a** stalk, stem. ‖ *ɛirq*[i] *dahab* ipecacuanha. *-ɛirq*[i] *suus* liquorice root, liquorice. **3b** vein (of a leaf). **4a** seam, vein (in rock). **4b** streak, vein-like mark. **5** beam (of wood). — /no pl/ **6** breeding, stock, descent. ‖ *ʕil-ɛirq*[i] *dassaas* or *ʕil-ɛirq*[i] *ymidd*[i] *l-saabiɛ gidd* ≈ like father like son. **7** body, texture, (stiff) consistency, viscosity. ‖ *raagil ɛirq* a strong man.

عراق *ɛuraaq* /n/ *[mus]* mode in Arabic music beginning on B half flat and having E half flat.

العراق *ʕil-ɛiraaq* /prop n/ Iraq.

عراقى ɛiraaqi **1** /adj */ Iraqi. ‖*wizz' ɛraaqi* swans. **2** /n */ an Iraqi.
عرّاقه ɛarraaqa /n pl *-aat*/ saddle blanket.
عرّاقيّة ɛarraqiyya /n pl *-aat*/ = *ɛaraqiyya*.
عرّق ɛarraq /vt/ **1** to cause to sweat. *ma-tgarrii-ſ il-ḥuṣaan ſaḥsan tiɛarraq-u* don't make the horse run or you'll make him sweat. **2**↓ to give (s.o.) a cut (on a transaction). **3** to make streaks in. - vn *taɛriiq*; ava/pva *miɛarraq*.
اتعرّق ſitɛarraq /vi/ passive of *ɛarraq*. - iva *mitɛarraq*.

ع ر ق ب
عرقوب ɛarquub /n pl *ɛaraqiib*/ **1** Achilles' tendon (in man), hamstring (in quadrupeds). ‖*kull' waaḥid miɛallaq min ɛarquub-u* ≈ every one must take the blame for his own mistakes. - *ſumm[a] ɛaraqiib [deris]* a skinny woman. **2** *[constr]* corner angle between two walls.
عرقوبة ɛarquuba /n pl *ɛaraqiib*/ **1** = *ɛarquub*. **2** *[rur]* crack in the earth.
عرقب ɛarqab /vt/ **1** to hamstring (an animal). **2** to put a stop to, make an end of. - vn *ɛarqaba*; ava/pva *miɛarqab*.
اتعرقب ſitɛarqab /vi/ passive of *ɛarqab*. - iva *mitɛarqab*.

ع ر ق ص
عرقص ɛarqaṣ /vt/ to entangle, confuse, tie in knots. *faɛr' mɛarqaṣ* tangled hair. ‖*ṣawaabiɛ miɛarqaṣa* gnarled fingers. - vn *ɛarqaṣa*; ava/pva *miɛarqaṣ*.
اتعرقص ſitɛarqaṣ /vi/ to be entangled, be confused, be tied in knots. - iva *mitɛarqaṣ*.

ع ر ق ل
عرقل ɛarqal /vt/ to hinder, complicate, make difficult. - vn *ɛarqala*; ava/pva *miɛarqal*.
اتعرقل ſitɛarqal /vi/ to be hindered, be complicated, be made difficult. - iva *mitɛarqal*.

ع ر ك
عركة ɛarka /n pl *-aat*/ fight between two groups, gang fight, brawl.
معركة maɛraka /n pl *maɛaarik*/ battle, struggle.
عارك ɛaarik /vt/ to fight with, struggle with. - vn *miɛarka*; ava/pva *miɛaarik*.
اتعارك ſitɛaarik /vi/ to fight, join battle. *ma-titɛarkuu-ſ ɛal-ſakl* don't fight over the food! - ava *mitɛaarik*.

ع ر م
عرمة ɛurma /n pl *ɛuram*/ *[agric]* pile, heap (especially of a harvested crop).
عرّم ɛarram /vt/ *[agric]* to form (a harvested crop) into piles. - vn *taɛriim*; ava/pva *miɛarram*.
اتعرّم ſitɛarram /vi/ passive of *ɛarram*. - iva *mitɛarram*.

ع ر م و س
عرموس ɛarmuus <Gr *armos*> /n pl *ɛaramiis*/ seam, join (e.g., between bricks, planks, parts of a sail). - also *ſarmuus, ɛarnuus*.

ع ر ن س
عرناسى ɛirnaasi /n/ pattern used in *mafrafiyya* work.

ع ر ن و س
عرنوس ɛarnuus <Gr *armos*> /n pl *ɛaraniis*/ seam, join (e.g., between bricks, planks, parts of a sail). - also *ſarmuus, ɛarmuus*.

ع ر و
عروة ɛirwa /n pl *-aat, ɛaraawi, ɛiraw*/ **1a** buttonhole. **1b** belt loop, belt carrier. **2** *[naut]* bight. ‖*ɛirwa ḥitta waḥda* endless bowline hitch. - *ɛirwa baḥri* running bowline hitch. **3** *[agric]* planting season. *ſil-ɛirwa ṣ-ṣefiyya* the summer planting season. **4** *[coarse]* woman, female.

ع ر و س
عروس ɛaruus /n/ Marone labrax, a type of bass found in the Nile and in the Mediterranean. - also *ɛaruuṣ*.

ع ر ى
عرى ɛiry /n/ **1** nakedness. **2** *[rur]* loose overshirt.
عريان ɛiryaan /adj * and pl *ɛaraaya*/ naked. *laazim tisiib raas-ak ɛiryaana* you must leave your head uncovered. *ɛiryaniin zayy' ma wildit-hum ſumm-u-hum* naked as the day they were born. *ɛiryaan malṭ* stark naked.
عرّى ɛarra /vt/ to lay bare, strip, expose. *ɛarri ṭiiz-ak lid-dababiir wi-ɛuul ya rabb inta ɛadiir [prov]* (expose your backside to the wasps and then ask for God's help) ≈ don't complain at the results of your own stupidity. - vn *taɛriyya, taɛriya↑*; ava/pva *miɛarri*.
تعرية *taɛriya↑* /n/ erosion. *ſil-baḥr' min ɛawaamil it-taɛriya* the sea is one of the causes of erosion.
اتعرّى ſitɛarra /vi/ to be laid bare, be stripped, be exposed. - iva *mitɛarri*.

ع ز ب [1]
أعزب ſaɛzab[1↑] = *ɛaazib*.
عازب ɛaazib /n pl *ɛuzzaab*/ bachelor, celibate. ‖*ɛaazib dahr' wala ſarmal fahr [prov]* it is easier to be a bache-

lor for a lifetime than a widower for a (single) month.
عازبه ɛazba /n pl ɛuzzaab/ spinster.
عزبة ɛazaba /n pl -aat/ = ɛazba.
عزوبة ɛuzuuba[1] /n/ bachelorhood, celibacy.
عزوبيّة ɛuzubiyya = ɛuzuuba.

[2] ع ز ب
عزبة ɛizba /n pl ɛizab/ **1** country estate consisting of a manor house and labourers' dwellings surrounded by farmland. **2** hamlet which was formerly such an estate, and which is under the jurisdiction of the ɛumda of a village. ‖*ɛizbit in-naxl* Ezbet en-Nakhl, an area in north-east Cairo.

[3] ع ز ب
عذاب ɛazaab /n pl -aat/ torture, torment.
عذّب ɛazzib /vt/ **1** to torture, torment. *rabb-i-na ħa-yɛazzib-ak* God will torment you (in hell-fire). **2** to cause to suffer, give a hard time to, give hell to. *misk-u l-buliis wi-ɛazzib-u ʃwayya* the police took him and knocked him about a bit. *ʃil-ɛarabiyya ɛazzibit-ni ṣ-ṣubħ* the car gave me a lot of trouble this morning. *ʃiddaa-ni f-fuvl[i] da ɛaʃaan yiɛazzib-ni* he gave me this job to make me suffer. - vn *taɛziib*; ava/pva *miɛazzib*.
اتعذّب ʃitɛazzib /vi/ **1** to be tortured, be tormented. **2** to be made to suffer, be given a hard time. - iva *mitɛazzib*.

[4] ع ز ب
عذب ɛazb /adj/ sweet, pleasant. ‖*mayya ɛazba* fresh water.
أعذب ʃaɛzab[2] /el/ more/most sweet or pleasant.
عذوبه ɛuzuuba[2] /n/ sweetness, pleasantness.

ع ز ر
عذر ɛazar *(u)* /vt/ **1** to excuse and sympathize with, make allowances for. *ʃana ɛazr-ak maɛa l-ɛiyaal di kull-a-ha* I sympathize with you, with all these children around. **2** to place in straits, cause to be hard up. *maṣariif il-madrasa ɛazarit-ni f-ʃahr-i-da* the school fees have put me in a tight spot this month. *ʃana maɛzuur (fil-filuus)* I'm hard up (for money). - vn *ɛuzr*; ava *ɛaazir*; pva *maɛzuur*.
عذر ɛuzr /n pl ʃaɛzaar/ excuse. *ʃana ɣalṭaan - tiqbal ɛuzr-i* I am wrong; accept my apology. ‖*ʃin-naas ʃaɛzaar* everyone has his problems.
معذور maɛzuur /adj */ mentally deficient, touched.
عذراء ɛazraaʃ↑ **1** /adj pl ɛazaara/ virgin. **2** /n/ *ʃil-ɛazraaʃ* **2a** *[astrol]* Virgo. **2b** (also *ʃil-ɛadra*) the Virgin Mary.

اتعذر ʃitɛazar /vi/ **1** to be in straits, be hard pressed. *ʃitɛazart[i] ʃwayya f-ʃawwil if-fahr* I was a bit hard up at the beginning of the month. **2** to become mentally deranged. - ava *mitɛizir*.
انعذر ʃinɛazar = ʃitɛazar. - vn *ʃinɛizaar*; ava *minɛizir*.
أعذر ʃaɛzar /vi/: *laqad ʃaɛzara man ʃanzar [prov]* he who allows you time to mend your ways by giving you a warning has every justification to act against you if you do not act accordingly.
اعتذر ʃiɛtazar /vi/ to apologize, excuse oneself. *ħa-yiɛtizir ɛan illi ħaṣal* he will apologize for what happened. *baɛat-li waraɛa bi-yiɛtizir fiiha ɛan il-migiyy* he sent me a note in which he excuses himself from coming. - vn *ʃiɛtizaar*; ava *miɛtizir*.

ع ز ر ء
عزرائيل ɛazraʃiil /prop n/ Azrael, the Angel of Death, the Angel who removes the soul from the body. *ga-k ɛazraʃiil il-moot* ≈ I hope you die!

ع ز ر ن
عزرنة ɛazrana /n/ **1** rage, fury. **2** stubbornness, recalcitrance.
معزرن miɛazran /adj/ **1** enraged, furious. **2** stubborn, recalcitrant.
اتعزرن ʃitɛazran /vi/ **1** to become enraged. **2** to become stubborn, behave stubbornly. - ava *mitɛazran*.

ع ز ز
عزّ ɛazz *(i)* /vt/ **1** to hold dear, cherish, prize. *b-aɛizz-u zayy axuu-ya* I love him like a brother. *bi-yɛizz[i] nafs-u* he holds himself in high esteem. ‖*(rabb-i-na) yiɛizz[i] miqdaar-ak* ≈ may your position be enhanced! (the conventional reply to *xaṭwa ɛaziiza*). – /vi/ **2** to become great, become powerful. *ɛazza man qanaɛ [prov]* ≈ contentment is the source of strength. *ʃallaahu ɛazza wa-gall* God, Almighty and Glorious is He. **3** to become rare. *ʃil-fuluus ɛazzit il-ʃayyam-di* money has become hard to find these days. - vn *ɛizz*; ava *ɛaaziz*. ¶ *ɛazz[a] ɛala* to be hard on, be difficult to bear. *yiɛizz[a] ɛaleena ʃinnak ħa-tsib-na* the thought of your leaving us is hard to bear. - *ɛazz[a] ɛan* to withold from, as in *ma kunt[a]-ʃ ʃaɛizz-u ɛannak* I would not withhold it from you (were it in my power to provide it) (a polite formula used in refusing a request).
عزّ ɛizz /n/ **1** wealth, riches. ‖*ʃibn[i] ɛizz* ≈ one born with a silver spoon in his mouth. - *yiduum il-ɛizz* ≈ may you always have plenty (said to a host). - *ʃayyaam il-ɛizz* ≈ the good old days. **2** /in constr/ the peak of intensity of. *ɛizz if-fooq* the height of desire. *ɛizz il-leel*

the depths of night. *ʕizz il-ḍuhr* the peak of the noontime heat. *ʕizz iʃ-ʃita* the depths of winter. *ʕizz il-ʕumr* the prime of life. ‖*ʕizz il-ḥabaayib* the truest of friends.

عزّة *ʕizza* /n/ **1** power, might, honour. *wi-ʕizzit illaah* by the glory of God! **2** (also *ʕizzit nafs*) self-esteem, self-respect, pride. *xadit-u l-ʕizza w-ṭarad-ni barra* he became outraged and threw me out.

عزّيّة *ʕizziyya* /n/ endearing quality. ‖*ʕizziyyit nafs* self-esteem.

أعزّ *ʔaʕazz* /el/ **1** more/most dear or precious. **2** more/most scarce.

عزيز *ʕaziiz* /adj pl *ʕuzaaz*/ **1** dear, precious. *miraat-i ʕaziiza ʕalayya* my wife is dear to me. ‖*ḥabb il-ʕaziiz [bot]* chufa, earth almond (Cyperus esculentus). **2** scarce.

عزيزى *ʕaziizi: xaʃab ʕaziizi* pitch pine. *ʕinab ʕaziizi* type of grape resembling the *fayyuumi* but larger.

معزّة *miʕazza* /n/ affection, esteem.

اتعزّ *ʔitʕazz* /vi/ to be prized, be cherished. ‖*ma-kan-ʃ itʕazz* it would not be withheld (were it in my power to provide it) (a polite formula used in refusing a request). - iva *mitʕazz*.

انعزّ *ʔinʕazz* = *ʔitʕazz*. - iva *minʕazz*.

عزّز *ʕazziz* /vt/ to provide backing for, back up, support. *ʔil-mudiir ʕazziz markaz-i* (or *mawqif-i*) the director backed me up. *ma-tiqdar-ʃ' taaxud sulfa mil-bank' min ɣeer ḥadd' ma yʕazziz-ak* you can't get a loan from the bank unless someone provides backing for you. - vn *taʕziiz*; ava/pva *miʕazziz*; pva *muʕazzaz*↑.

اتعزّز *ʔitʕazziz* /vi/ **1** to be backed up, be supported. **2** to refuse out of pride what one really desires, stand on one's dignity. *ṭalabuu-ha tʕazzizit fatuu-ha tnaddimit [prov]* (they asked for her hand and she was coy, but when they passed her over she was sorry) he who plays hard-to-get may find himself passed over. - ava/iva *mitʕazziz*.

اعتزّ *ʔiʕtazz* /vi/ to pride oneself, boast. *ʔinta muʕtazz' b-nafs-ak xaaliṣ* you are very proud. - vn *ʔiʕtizaaz*; ava *muʕtazz*.

استعزّ *ʔistaʕazz* /vt/ to pride oneself, boast. *mistiʕizziin bi-ʔawlad-hum* they feel very proud of their children. - ava *mistiʕizz*.

ع ز ف

عزف *ʕazaf (i)* **1** /vt/ to play (music or a musical instrument). *bi-tiʕzif il-biyaanu* she plays the piano. *b-aʕzif samaaʕi* I play by ear. **2** /vi/ to play, emit music. *bi-yiʕzif nafaaz* it plays out of tune. - vn *ʕazf*; ava *ʕaazif*; pva *maʕzuuf*.

عازف *ʕaazif* /n */ player, instrumentalist.

اتعزف *ʔitʕazaf* /vi/ to be played (of music or a musical instrument). - iva *mitʕizif*.

ع ز ق

عزق *ʕazaq (a)* /vt/ **1** to dig over, till, hoe (soil) preparatory to planting. *bi-niʕzaq il-ʔarḍ' bil-faas* we break up the soil with the hoe. **2** to beat, hit. *ḥ-aʕzaq-ku bin-nabbuut* I'll beat you with a stick! - vn *ʕazq*, *ʕaziiq*; ava *ʕaaziq*; pva *maʕzuuq*.

عزقه *ʕazqa* /inst n, pl *-aat*/ a tilling, a hoeing (of the soil).

اتعزق *ʔitʕazaq* /vi/ **1** to be dug over, be tilled, be hoed (of soil). **2** to be beaten, be hit. - iva *mitʕiziq*.

ع ز ل [1]

عزل *ʕazal (i)* /vt/ **1** to separate, segregate, isolate. *ʕazalu l-maḥmumiin fil-mustaffa* they isolated the fever patients in the hospital. ‖*ʕazal il-kahraba* to disconnect the electricity. **2** to insulate. *ʔik-kawitf' b-yiʕzil-u min il-ḥadiid* the rubber insulates it from the metal. **3** to alienate. *ʕazal siyasiyyan* to deprive of political rights. **4** to depose, dismiss. *baʕd is-sawra ʕazaluu ʕan il-wizaara* after the revolution they sacked him from the ministry. - vn *ʕazl*; ava *ʕaazil*; pva *maʕzuul*.

عزل *ʕazl* /n/ quarantine area, isolation area.

عازل *ʕaazil* /n pl *ʕawaazil*/ insulator.

أعزل *ʔaʕzal* /adj, fem *ʕazla*, pl *ʕuzl*/ unarmed, defenceless. *ʔil-qitaal il-ʔaʕzal* unarmed combat.

عزال *ʕizaal* /n/ **1** furnishings, household effects. **2** *[coarse]* sexual organs (of a male).

عزويلة *ʕizweela* /n pl *ʕazawiil*/ **1** giblet. **2** piece of furniture.

معزل *maʕzal* /n pl *maʕaazil*/ quarantine area, isolation area.

اتعزل *ʔitʕazal* /vi/ passive of *ʕazal*. - iva *mitʕizil*.

انعزل *ʔinʕazal* = *ʔitʕazal*. - vn *ʔinʕizaal*; iva *minʕizil*.

عزّل *ʕazzil* /vi/ to move house. *ʔilli kaanu sakniin fif-faqqa di ʕazzilu* the people who were living in this apartment moved. - vn *taʕziil*; ava *miʕazzil*.

اعتزل *ʔiʕtazal*↑ /vt/ to abandon, give up. *ʔiʕtazalu s-siyaasa* they have given up politics. - vn *ʔiʕtizaal*; ava *miʕtizil*.

ع ز ل [2]

عذول *ʕazuul* /n pl *ʕuzzaal, ʕawaazil*/ **1** jealous person who attempts to interfere between intimates or lovers. *leeh il-ʕawaazil ḥasdin-ni - dool ḥaqq-u-hum yibku ʕalayya* why do the jealous envy me? they should weep for me! (from a song) — *ʕawaazil* /pl n/ **2** personal critics. censorious people. *ʔizzaay tismaʕ kalaam il-*

ʕawaazil how can you pay attention to what (my) enemies say?

ع ز م

عزم ʕazam (i) /vt/ **1** to invite. *laazim tiʕzim ʃumm-ak tiigi* you must invite your mother to come. *ʕazamnaa ʕal-ɣada* we invited him to lunch. *ruḥna l-ḥafla w-laqenaa-hum ʕazmiin naas kitiir qawi* we went to the party and found they had invited lots of people. — /vi/ **2** to proffer an invitation (out of politeness). *ʕazamit ʕag-giraan bil-ʕeef is-suxn* she offered freshly-baked bread to the neighbours. *ʃana ɣariib ʕalaʃaan tiʕzimu ʕalayya kida* am I a stranger that you should feel compelled to keep pressing me (e.g., to eat) like this? **3** to decide, resolve, determine. *ʃiza ʕazamta fa-tawakkal ʕala llaah* once you've made up your mind trust in God (to help you carry out your resolve). *ʃana ʕazamt*^{i} *xalaaṣ ʕag-gawaaz* I've made up my mind to get married. - vn *ʕazm, ʕuzuuma*; ava *ʕaazim*; pva *maʕzuum*.

عزم ʕazm /n/ **1** resolve, intention, resolution. *ʕala feen il-ʕazm* where do you intend to go? **2** (also *ʕizm*) power, strength, energy. *ʕazm il-mutoor* the power of the engine. *ʕazm-u qall* his strength declined. — /pl *ʕuzuum*/ **3** *[mech]* moment.

عزومة ʕuzuuma /n pl *ʕazaayim*/ **1** invitation. ‖*ʕuzuumit marakbiyya* an invitation not seriously intended. **2** (lavish) meal for invited guests. *ʕuzuumit ɣada* a luncheon party. *ʕamalnaa-lu ʕuzuuma f-ʕiid milaad-u* we had a feast for him on his birthday.

معزوم maʕzuum /n pl *maʕaziim*/ guest.

عزيمة ʕaziima /n/ **1** firmness of purpose, determination, resolution. *tiqdar tibaṭṭal is-sagaayir law ʕandak ʕaziima* you can give up cigarettes if you're really determined. **2** /pl *ʕazaayim*/ formula or passage (e.g., of scripture) recited as a charm or to bring about healing.

اتعزم ʃitʕazam /vi/ to be invited. - iva *mitʕizim*.

انعزم ʃinʕazam = ʃitʕazam. - iva *minʕizim*.

عزّم ʕazzim /vi/ to make spells, perform magic. - vn *taʕziim*; ava *miʕazzim*.

تعزيمة taʕziima /n pl *taʕaziim, taʕzimaat*/ spell, incantation.

اتعزّم ʃitʕazzim /vi/ (impersonal) passive of *ʕazzim*. *ʃil-beeḍ da mitʕazzim ʕalee* those eggs have been bewitched. - iva *mitʕazzim*.

اتعازم ʃitʕaazim /vi/ **1** to invite one another. *fiḍlu ʕaʃar daqaayiq yitʕazmu miin yidxul il-ʃawwil* they spent ten minutes inviting each other to go in first. **2** to gather one's strength. *ʃitʕazimt*^{i} *wi-ddeet-u qalam* I slapped his face with all the strength I could muster. - ava *mitʕaazim*.

ع ز و

عزوة ʕizwa /n/ support, backing.

ع ز و ل see ¹ ع ز ل : *ʕizweela*

ع ز ى

عزا ʕaza /n/ **1** paying of condolences. **2** gathering for the paying of condolences to a bereaved family. *ʃil-ʃavraab illi gum lil-ʕaza* the strangers who came to pay their condolences. *kaan fii naas bi-yiʕmilu l-ʕaza ʃarbiʕiin leela* there used to be people who sat to receive condolences for forty days. ‖*yigii-ni ʕazaa-k [women]* may I hear news of your death!

معزى maʕza /n pl *maʕaazi*/ place where condolences are offered at a funeral.

عزّى ʕazza /vt/ to console, pay condolences to, comfort. *ga yʕazzii-na* he came to pay his condolences. *kalaam-u ʕazzaa-ni b-ṭariiqa miʃ maʕquula* his words comforted me in an amazing way. - vn *taʕziyya, taʕziya*; ava/pva *miʕazzi*.

تعزية taʕziyya, taʕziya /n pl *taʕaazi*/ condolence, solace, consolation.

اتعزّى ʃitʕazza /vi/ to be consoled, receive condolences, be comforted. - iva *mitʕazzi*.

ع س ر

عسر ʕusr /n/ **1** difficulty. *ʕusr*^{i} *haḍm* indigestion. *ʕusr*^{i} *tanaffus* difficulty in breathing. ‖*ʕusr il-mayya* retention of urine. **2** hard times, difficult circumstances. *baʕd il-ʕusr*^{i} *yusr [prov]* ≈ after the clouds the sunshine.

عسر ʕisir /adj/ difficult. *wilaada ʕisra* a difficult birth.

عسرة ʕisra /n/ sultry weather. *ʕisrit misra tʕaffin il-kisra [prov]* the sultry weather of August makes the bread go mouldy.

عسراوى ʕisraawi /adj */ left-handed.

أعسر ʔaʕsar^{1}↑ /adj, fem *ʕasra*, pl *ʕusr*/ = *ʕisraawi*.

أعسر ʔaʕsar^{2} /el/ more/most difficult or trying.

عسير ʕasiir↑ /adj */ difficult, trying.

عسّر ʕassar /vt/ to make difficult, make trying. *ʃamfiir yiquul liz-zarʕ*^{i} *siir bala taʕsiir xalli ṣ-ṣuvayyar yiḥaṣṣal ik-kibiir* (the month of) Amshir (brings vitality and) tells the crops to flourish without any setbacks till the small plants catch up with the big ones. - vn *taʕsiir*; ava/pva *miʕassar*.

اتعسّر ʃitʕassar /vi/ to be made or become difficult or trying. *wilaada mitʕassara* a difficult birth. - ava/iva *mitʕassar*.

ع س س
عسّ ʕass (ı) /vı/ to grope, feel one's way (in the dark). ʕasseet ʕala ʃukrit il-baab ʕalaʃaan ʃaʁrug I felt around for the door handle to let myself out. - vn ʕass, ʕasasaan; ava ʕaasıs.

ع س ع س
عسعس ʕasʕas /vi/ to grope, feel one's way (in the dark). - vn ʕasʕasa; ava miʕasʕas.

ع س ف
عسف ʕasf /n/ tyranny.
اتعسّف ʃitʕassaf /vi/ to adopt or impose arbitary views or decisions. - vn taʕassuf; ava mutaʕassif.
تعسّفى taʕassufi /adv/ haphazardly, arbitrarily, at random.

ع س ك ر
عسكر ʕaskar /vi/ to encamp, set up camp. ʕaskarna gamb ıṭ-ṭariiq we camped beside the road. ‖miʕaskar fis-sirıir he stays in bed all the time. - ava miʕaskar.
عسكرى ʕaskari /adj */ 1 military, martial. maglis ʕaskari military tribunal. ḥukm" ʕaskari martial law. maḥkama ʕaskariyya court martial. raagil ʕaskari (1) a military man (of any rank). (2) a military type. ‖xilqit-u ʕaskariyya he has a stern face. — /n pl ʕasaakir, ʕaskar/ 2 soldier of the lowest rank, private. ‖ʕaskari buliiṣ policeman. - ʕaskari muruur traffic policeman. - ʕaskar wi-ḥaramiyya the children's game of 'cops and robbers'. - ʕaskari maṭaafi fireman. 3 pawn (in chess). 4 bed-knob.
معسكر muʕaskar /n pl -aat/ camp, encampment. muʕaskar ʕamal work camp.
اتعسكر ʃitʕaskar /vi/ (impersonal) passive of ʕaskar. ʃil-ʃarḍ' di ma-yitʕaskar-ſ' fiiha camping is not allowed on that land. - iva mitʕaskar.

ع س ل
عسل ʕasal /n/ 1 (also ʕasal ʃabyaḍ, ʕasal naḥl) honey. ya ʕasal ʃabyaḍ ya tiin [vendor's cry] figs sweet as honey! ‖ʃahr il-ʕasal honeymoon. - samn" ʕala ʕasal a harmonious combination, a perfect match. - ʕasal itlaxbaṭ ʕala laban ≈ a mess, a hodgepodge. - (ɣarɢaan) fil-ʕasal (drowning in honey) totally unaware of what's going on (as a result of, e.g., being in love). - yoom ʕasal wi-yoom baṣal ≈ some days are good and some bad. - nahaar-ak zayy il-ʕasal have a good day! - kuuz ʕasal honeydew melon. - qarɛ" ʕasal pumpkin (Curcubita pepo). - ʃilli ʕaayiz il-ʕasal yuṣbur ʕala qarṣ in-naḥl [prov] (he who wants honey puts up with being stung by the bees) be prepared to pay the cost for what you want. 2 (also ʕasal ʃiswid, ʕasal ʃasmar, ʕasal qaṣab) molasses, treacle. ‖ʕasal wi-ṭḥiina a harmonious combination, a perfect match.
عسله ʕasala /n/ type or quality of honey. ʃil-ʕasala di liiha riiḥa ḥilwa this type of honey has a pleasant smell.
عسلى ʕasali /adj, often invar/ 1 honey-like, sweet or sticky as honey. qarɛ" ʕasali pumpkin (Curcubita pepo). 2 light brown. ʕenee-ha ʕasali (or ʕasaliyya) she has hazel eyes.
عسليّه ʕasaliyya /coll n/ hard stick-shaped confection made from molasses and flour.
عسليّايه ʕasaliyyaaya /pl -aat/ unit noun of ʕasaliyya.
معسول maʕsuul /adj/ mellifluous. kalaam maʕsuul honeyed words.
عسّل ʕassil /vt/ 1 to mix with or soak in honey or molasses. ʕassil id-duxxaan baqa it's high time you steeped the tobacco in molasses. — /vi/ 2 to become sweet in taste. yaah il-baṭaaṭıs ʕassılıt my, the potatoes have become sweet (because of bad storage)! 3 to take a nap. ʃana xalaaṣ laazım ʃaʕassil ſiwayya I'm tired out - I must take a nap. ‖ʕenee ʕassilit he dozed off. - vn taʕsıl; ava/pva miʕassil.
تعسيله taʕsıla /inst n, pl -aat/ a nap.
معسّل miʕassil /n/ preparation of coarse-cut tobacco steeped in molasses and fermented, used for smoking in the gooza.
اتعسّل ʃitʕassil /vi/ to be mixed with or soaked in honey or molasses. - iva mitʕassil.

ع س م
عسمانى ʕusmaanı /adj */ Ottoman, Turkish (of the Ottoman period).
عسمانلى ʕusmanlı, ʕusmalli = ʕusmaanı.

ع س ى
عسى ʕasa /adv/ perhaps. ‖ʕasa-lla let's hope to God (that), as in ʕasa-lla ma-tınsaa-ſ let's hope you won't forget.

ع ش ا ن
عشان ʕaʃaan (also ʕalaʃaan) /prep/ 1 for, for the sake of. ʕaʃaan ʃeeh what for? why? ʕaʃaan xaṭr-ak for your sake. ʃıl-ʃooḍa di ʕaʃaan ıl-musafrın this room is for travellers. ʃana mustaʕıdd aḍaḥḥı b-ḥayaat-ı ʕalaʃan-ha I'm ready to sacrifice my life for her. 2 because of, owing to. ʕaʃaan kıda for that reason. ʕamaluu-li maḥḍar ʕaʃaan ıl-ʃihmaal they slapped a police report on me for my negligence. — /conj/ 3 so that, in order to. ḥ-awaddı ṣ-ṣawaanı l-furn" ʕaʃaan yıstıwu I'll take the

baking-trays to the bakery to cook. *ʕattiṣil bii ʕizzaay ɛaʃaan yiɛraf illi ḥaṣal* how can I contact him so that he'll know what happened? *ʕin-naxla b-taaxud waqtᵘ ɛaʃaan tikbar* it takes time for a palm tree to grow. **4** because. *ʕana zaɛlaan minnak ɛaʃaan miʃ bi-tgii-li ʕabadan* I'm annoyed with you because you never come to see me. *bi-niṿsil-ha ɛaʃaan bi-tkuun waxda ʕatriba* we wash it because it gets dusty.

ع ش ب

عشب *ɛuʃb* /coll n, pl *ʕaɛʃaab*/ herbage, plant(s). *ɛuʃbⁱ ṭibbi* medicinal plants. *ʕaɛʃaab baḥriyya* seaweed.

عشبة *ɛaʃba, ɛiʃba* /n/ sarsaparilla.

ع ش ر ¹

عشر *ɛaʃr* /n pl *ʕaɛʃaar*/ *[Isl]* certain portion of the Koran recited in one sitting.

عشرى *ɛaʃri* /adj/ decimal. *kusuur ɛaʃriyya* decimal fractions.

عشر *ɛuʃrᴵ* /n/ **1** /pl *ʕaɛʃaar*/ one tenth. **2** /pl *ɛuʃuur*/ tithe.

أعشارى *ʕaɛʃaari* /adj/ decimal.

عشر *ɛaʃar* /num; in constr w foll n pl; usu *ɛaʃart* when followed by n pl ordinarily w initial hamza/ ten. *ɛaʃar banaat* ten girls. *ɛaʃart alaaf* ten thousand. *ɛaʃart iyyaam* ten days.

عشرة *ɛaʃara* /pl *-aat*/ **1** /num; in absol state, in apposition, or w foll n sing in contexts of ordering and itemizing/ ten. *miyya w-ɛaʃara bass* one hundred and ten only. *ṣawabɛ-u l-ɛaʃara* his ten fingers. *ɛaʃara gneeh* ten pounds. *ɛaʃara kiilu* ten kilos *haat ɛaʃara qahwa* bring ten coffees! *ɛaʃaraat min in-naas* ≈ dozens of people. ‖*baṣam bil-ɛaʃara* to be in complete agreement, give one's full approval. - *kal bil-ɛaʃara* to wolf down one's food. - *ɛamal* (or *ḍarab*) *ɛaʃara* to masturbate. - *ʕil-ɛaʃara ṭ-ṭayyiba* (points-winning) ten of diamonds in the card game *koomi* (q.v.). - *ʕummᵃ ɛaʃara* ten-piastre piece or note. **2** /n/ round (of a board game), hand (of cards). *ɛaʃarit ṭawla* a round of backgammon.

عشّار *ɛaʃʃaar* /n */ *[Chr]* publican. *da zayy il-ɛaʃʃariin* he's a rapacious sort.

عشرين *ɛiʃriin* **1** /num pl *-aat*/ twenty. *ɛiʃriin yoom* twenty days. *bintⁱ fil-ɛiʃrinaat* a girl in her twenties. *min zamaan fil-ɛiʃrinaat* way back in the 'twenties. **2** *ʕil-ɛiʃriin* /adj invar/ the twentieth.

عاشوراء، عاشورا *ɛaʃuura* /n/ **1** tenth day of Muharram, celebrated by Muslims (a traditional meal of duck, milk and rice, the pudding called *ɛaʃuura* etc. being a feature of this occasion). **2** sweet pudding (based on whole wheat) eaten on the tenth of Muharram.

عاشر *ɛaaʃirᴵ* /adj/ tenth.

عشّر *ɛaʃʃarᴵ* /vt/ **1** to multiply by ten, make or do ten-fold. **2** to tithe. - vn *taɛʃiir*; ava/pva *miɛaʃʃar*.

اتعشّر *ʔitɛaʃʃarᴵ* /vi/ passive of *ɛaʃʃarᴵ*. - iva *mitɛaʃʃar*.

ع ش ر ²

عسر *ɛuʃr²* **1** /n/ pregnancy (of animals). **2** /adj invar/ pregnant (of animals).

عشرة *ɛiʃra* /n/ association, cohabitation, close friendship.

عسر *ɛuʃar* /adj invar/ *[rur]* pregnant.

عشرى *ɛiʃari* /adj */ sociable, fond of company.

عسار *ɛiʃaar* /fem adj/ pregnant (of animals).

عشيرة *ɛaʃiira* /n pl *ɛaʃaayir*/ kindred, kin.

معسر *maɛʃar. ʕabu maɛʃar* /prop n/ a renowned ninth-century astrologer. *ʔil-baraka f-ḥaḍrit-u ʕabu maɛʃar ig-gidiid [joc]* the credit is all his, the new Abu Ma'shar.

عشّر *ɛaʃʃar²* **1** /vt/ to mate with and make pregnant (especially of animals). **2** /vi/ to become pregnant (of animals). - vn *taɛʃiir*; ava/pva *miɛaʃʃar*.

اتعشّر *ʔitɛaʃʃar²* /vi/ to be impregnated (of animals). - iva *mitɛaʃʃar*.

عاشر *ɛaaʃir²* /vt/ to live with, associate intimately with. *ɛaʃirt-u muddit ma kunna fig-ɡeef* I was an intimate of his in the army. *bi-yɛaʃir-ha fil ḥaraam* he's having an illicit affair with her. *min ɛaaʃṛ il-ɡoom ʕarbiɛiin yoom ṣaar minhum [prov]* if you live with people for forty days you become like them. *ɛaaʃir ɛaaʃir misiir-ak tifaariɡ [prov]* enjoy the company of those you live with while you can, for one day you will be separated (by death).

اتعاشر *ʔitɛaaʃir* /vi/ **1** to be lived with, be associated closely with. *raagil ma-yitɛaʃir-ʃ* a man impossible to live with. **2** to associate closely. - ava/iva *mitɛaaʃir*.

ع ش ر ا ن

عشيران *ɛaʃiraan* /n/ *[mus]* name given to the note A below middle C. ‖*ḥuseeni ɛaʃiraan* mode in Arabic music beginning on A and having B half flat and E half flat.

ع ش ش

عشّ *ɛiʃʃ* /n pl *ɛiʃuuf, ɛiʃaaf*/ nest. ‖*ɛiʃʃ il-ɤuraab* /coll n/ mushroom(s), toadstool(s). - *ɛiʃʃ in-naml* (1) *[needlew]* smocking. (2) name given to palm fronds woven decoratively to form a small pyramid.

عشّة *ɛiʃʃa* /n pl *ɛiʃaʃ*/ **1a** hut, shack, hovel. **1b** seaside chalet. **2** coop for chickens, ducks or geese.

عشّش *ɛaʃʃiʃ* /vi/ **1** to nest. ‖ *ʔil-ʕummⁱ tɛaʃʃiʃ wil-ʕabbⁱ ẏṭaffiʃ [prov]* ≈ a mother gathers her children around

her; a father drives them away. **2** to become full of the nests of birds or vermin. *ʃif-ʃagara ɛaʃʃifit* the tree became full of nests. ‖*raas-u ɛaʃʃifit* his head is lice-ridden. **3** *[constr]* to become full of cohering lumps of pebbles (of concrete, as a result of bad mixing). - vn *taɛʃiif*; ava *miɛaʃʃif*.

اتعشش *ʃitɛaʃʃif* /vi/ (impersonal) passive of *ɛaʃʃif*. *ʃif-ʃagara di tɛaʃʃif fiiha s-sana lli faatit* this tree had nests in it last year. - iva *mitɛaʃʃif*.

ع ش ق

عشق *ɛiʃiq (a)* /vt/ to love passionately. *ʃin saraqt israq gamal wi-ʃin ɛiʃiqt iɛʃaq qamar [prov]* (if you steal, steal a camel, and if you fall in love, fall in love with a beautiful girl) ≈ you might as well be hanged for a sheep as a lamb. - vn *ɛiʃq*; ava *ɛaaʃiq*; pva *maɛʃuuq*.

عشق *ɛiʃq* /n/ passion, love.

عاشق *ɛaaʃiq* /n * and pl *ɛuʃʃaaq*/ lover. ‖*ʃil-ɛaaʃiq yiṣalli ɛala gamaal in-nabi* let the lover (i.e. of the Prophet) bless the beauty of the Prophet! (said to solicit blessings as a protection against the evil eye). - *ɛaaʃiq wi-maɛʃuuq [carp]* mortise and tenon joint.

معشوق *maɛʃuuq* /n */ beloved. ‖*ɛaaʃiq wi-maɛʃuuq* see *ɛaaʃiq*.

عشيق *ɛaʃiiq* /n pl *ɛuʃʃaaq*/ (male) lover, sweetheart.

عشيقة *ɛaʃiiqa* /n pl *-aat*/ mistress, sweetheart.

اتعشق *ʃitɛaʃaq* /vi/ to be loved passionately. - iva *mitɛiʃiq*.

انعشق *ʃinɛaʃaq* = *ʃitɛaʃaq*. - iva *minɛiʃiq*.

عشّق *ɛaʃʃaq* /vt/ **1** to hitch up, attach. *ɛaʃʃaq il-muxṭaaf ɛal-winʃ* hitch the anchor to the winch! **2** to put into gear. *ma-qdirt'-ʃ ʃazuqq il-ɛarabiyya ɛaʃaan miɛaʃʃaqa* I couldn't push the car because it was in gear. - vn *taɛʃiiq*; ava/pva *miɛaʃʃaq*.

تعشيقة *taɛʃiiqa* /inst n, pl *-aat*/ **1** a hitching up, an attaching. **2** a gear change.

اتعشّق *ʃitɛaʃʃaq* /vi/ passive of *ɛaʃʃaq*. - iva *mitɛaʃʃaq*.

ع ش م [1]

عشم *ɛaʃam* /n/ hope, expectation. *ɛaʃam-i w-ragaaʃ-i fiik waḥd-ak ya rabb* my hopes are in you alone, Lord! *qaṭaɛ ɛaʃam-hum* he dashed their hopes. *ma-kan-ʃ il-ɛaʃam fiik* I had expected better of you. *da b-ɛaʃam-i fiik* or *da min ɛaʃam-i fiik* I had expected nothing less from you (as a friend). ‖*ɛaʃam-ak ɛaʃam ʃibliis fig-ganna [prov]* (your hope is like that of Satan for Paradise) ≈ you haven't a hope in hell.

عشمان *ɛaʃmaan* /adj */ hopeful, expectant. *ɛaʃmaan fiina* having high hopes of us.

عشّم *ɛaʃʃim* /vt/ to make hopeful, encourage. *ɛaʃʃimt-i-ni bil-ḥalaq xarramt ana wdaan-i [prov]* (when you promised me earrings, I went and pierced my ears) ≈ I counted my chickens before they were hatched. - vn *taɛʃiim*; ava/pva *miɛaʃʃim*.

اتعشّم *ʃitɛaʃʃim* /vi/ **1** to be hopeful or expectant. **2** to be made hopeful or expectant. - ava/iva *mitɛaʃʃim*.

ع ش م [2]

عشماوى *ɛaʃmaawi* /n pl *-yya*/ hangman, executioner.

ع ش و see ع ش ى : *ɛaʃwa, ɛiʃwiyya, ɛaʃwaaʃi*

ع ش ى

عشى *ɛiʃi (a)* /vi/ to become night-blind. - ava *ɛaaʃi*.

يعشى *yiɛʃi* /vi imperf only/ to be dim-sighted. *bi-yiɛʃi bi-ɛnee* his eyesight is weak.

عشا، عشاء *ɛaʃa* [1] /n/ evening meal, supper. *ʃil-ɛaʃa ʃeeh il-lelaa-di* what's for supper tonight? ‖*ʃil-ɛaʃa r-rabbaani [Chr]* the Lord's Supper.

عشى *ɛaʃa* [2] /n/ night-blindness.

عشوة *ɛaʃwa* /n pl *-aat*/ an evening meal. *kaanit ɛaʃwa tistaahil buqq-ak* it was a delicious dinner.

العشا، العشاء *ʃil-ɛiʃa* /fem n/ **1** the Muslim evening prayer (performed approximately one hour after sunset). **2** the time of the evening prayer.

عشويّة *ɛiʃwiyya* /n/ time of the *ɛiʃa* (q.v.).

عشيّة *ɛaʃiyya* /n/ **1** evening twilight. **2** *[Chr]* vespers.

عشوائى *ɛaʃwaaʃi* **1** /adv/ haphazardly. *da ma-bi-ytimm'-ʃ ɛaʃwaaʃi* it doesn't happen by chance. **2** /adj/ haphazard.

عشّى *ɛaʃʃa* /vt/ **1** to give or serve an evening meal to. *ḥa-tɛaʃʃii-na ʃeeh* what are you going to give us for supper? **2** to give the daily bread (of the Lord). *rabb-i-na ɛaʃʃaa-na* God has provided. - ava/pva *miɛaʃʃi*.

اتعشّى *ʃitɛaʃʃa* /vi/ to take an evening meal. *ʃitɛaʃʃeena makaroona* we had macaroni for supper. *ʃitʀadda bii qabl' ma yitɛaʃʃa biik* (eat him for lunch before he eats you for supper) get him before he gets you. - ava *mitɛaʃʃi*.

ع ص ا see ع ص ى [2] : *ɛaṣa*

ع ص ب

عصب *ɛaṣab [1] (u)* /vt/ to bind. *niruuḥ laffiin iʃ-ʃeela w-ɛaṣbiin ɛaleeha ɛaṣb' gaamid* then we wrap up the load and bind it tightly. - vn *ɛaṣb, ɛaṣabaan*; ava *ɛaaṣib*; pva *maɛṣuub*.

عصبة *ɛaṣba* /n pl *-aat, ɛuṣab/ [rur]* type of headkerchief worn by women.

عصبة ʕuṣba /n pl ʕuṣab/ league, band. *ʕuṣbit il-ʃumam* the League of Nations.

عصب ʕaṣab[2] /n pl ʃaʕṣaab/ **1** nerve. *duktoor ʃaʕṣaab* neurologist. ‖*haddi ʃaʕṣaab-ak* calm down! - *xassaruu-lu ʃaʕṣaab-u* they made him irritable, they put him on edge. - *ʃaʕṣab-ha baqit mafduuda* she became tense. - *ʃaʕṣab-ha tilfit* her nerves were wrecked. - *ʃaʕṣaab-u f-tallaaga* ≈ he's as cool as a cucumber. **2** sinew. ‖*ʕandu ʕaṣab* it is sturdy (of an animal). **3** kinship on the father's side. *di ʔaribit-na min il-ʕaṣab* she is a relative on our father's side.

عصبى ʕaṣabi /adj */ **1a** pertaining to the nerves, nervous. *ʃinhiyaar ʕaṣabi* nervous breakdown. **1b** neurotic. **2** highly-strung, touchy.

عصبيّة ʕaṣabiyya /n/ **1** kinship ties. **2** irritability.

عصابة ʕiṣaaba /n pl -aat/ **1** gang (e.g., of criminals). *ḥarb il-ʕiṣabaat* gang warfare. **2** head-kerchief.

عصيب ʕaṣiib /adj/ hard, difficult. *ʃawʔaat ʕaṣiiba* hard times, times of stress. *mawʔif ʕaṣiib* a difficult situation.

اتعصب ʃitʕaṣab /vi/ to be bound. - iva *mitʕiṣib*.

عصّب ʕaṣṣab /vt/ to bind with a kerchief. *ʕenee mʕaṣṣaba* he is blindfolded. - vn *taʕṣiib*; ava/pva *miʕaṣṣab*.

اتعصّب ʃitʕaṣṣab /vi/ **1** to become fanatical, become a bigot. **2** to be bound with a kerchief. - vn *taʕaṣṣub*; ava/iva *mitʕaṣṣab*.

تعصّب taʕaṣṣub /n/ partisanship, fanaticism, bigotry.

اعتصب ʃiʕtaṣab /vi/ to form a league, form a union. - vn *ʃiʕtiṣaab*; ava *miʕtiṣib*.

ع ص ج

عصّاج ʕaṣṣaag /adj invar/ cooked with onion (and sometimes tomato sauce, parsley etc.) until the juices are absorbed (of minced meat to be used as a component in stuffed vegetables etc.).

عصّج ʕaṣṣag /vt/ to cook (minced meat) with onion (and sometimes tomato sauce, parsley etc.) until the juices are absorbed. - vn *taʕṣiig*; ava/pva *miʕaṣṣag*.

اتعصّج ʃitʕaṣṣag /vi/ passive of ʕaṣṣag. - iva *mitʕaṣṣag*.

ع ص د

عصيدة ʕaṣiida /n/ thick gruel made with flour and butter.

ع ص ر[1]

عصر ʕaṣar *(u)* /vt/ to wring, press, squeeze. *bi-tuʕṣur il-ɣasiil* she wrings the washing. *ʕaṣaru minnu z-zeet* they pressed the oil out of it. ‖*ʕaṣaruu fil-imtiḥaan* they gave him a real grilling in the exam. - vn *ʕaṣr, ʕaṣiir*; ava *ʕaaṣir*; pva *maʕṣuur*.

عصرة ʕaṣra /inst n, pl -aat/ a wring, a press, a squeeze.

عصير ʕaṣiir /n/ (extracted) juice. *ʕaṣiir burtuqaan* orange juice.

عصارة ʕuṣaara /n pl aat/ juice, sap.

عصّارة ʕaṣṣaara /n pl -aat/ **1** juice-squeezer. **2** mangle, wringer.

معصرة maʕṣara /n pl *maʕaaṣir*/ oil press, sugar-cane press.

معصراوى maʕṣaraawi /adj */relating to the large limestone quarry of Ma'sara, near Helwan. *ʃiṭ-ṭuub il-maʕṣaraawi b-titbini minnu gawaamiʕ* mosques are built of Ma'sarawi stone.

إعصار ʔiʕṣaar /n pl *ʔaʕaṣiir*/ hurricane, tornado, cyclone.

اتعصر ʃitʕaṣar /vi/ to be wrung, be pressed, be squeezed. - iva *mitʕiṣir*.

انعصر ʃinʕaṣar = *ʃitʕaṣar*. - iva *minʕiṣir*.

ع ص ر[2]

العصر ʃil-ʕaṣr /n/ **1** the afternoon. *ʔahwit il-ʕaṣr* afternoon coffee. ‖*suuq il-ʕaṣr* junk and old clothes market, flea market. **2** the Muslim afternoon prayer, performed any time from the moment half-way between noon and sunset and sunset itself. **3** /pl *ʕuṣuur*/ age, period, epoch. *haruun ir-rafiid ʕaṣr-u* the Harun al-Rashid of his age. *raagil maafi maʕa l-ʕaṣr* a man who keeps up with the times.

العصريّة ʃil-ʕaṣriyya /n/ the late afternoon.

العصارى ʃil-ʕaṣaari /n/ the time about half an hour before sunset (usually associated with romantic feelings).

عاصر ʕaaṣir /vt/ to be contemporary with. *ʕaṣirt il-malik* I was alive in the time of the king. - vn *muʕaṣra*; ava *miʕaaṣir*.

معاصر muʕaaṣir† /adj */ contemporary. *ʃil-ʃinsaan il-muʕaaṣir* modern man.

ع ص ع ص

عصعوص ʕaṣʕuuṣ /n pl *ʕaṣaʕiiṣ*/ **1** drumstick. *ʃibn*[a] *ʕamm-u zayy*[i] *ʕaṣaʕiiṣ in-nuqqariyya* his cousin is as thin as a drumstick. **2** *[anat]* coccyx.

عصعوصى ʕaṣʕuuṣi /adj/ coccygeal.

معصعص miʕaṣʕaṣ /adj */ skinny, thin.

ع ص ف

عصف ʕaṣaf *(i)* /vi/ to blow violently (of the wind). - vn *ʕaṣf*; ava *ʕaaṣif*; pva *maʕṣuuf*.

عصفة ʕaṣfa /inst n, pl -aat/ a gust of wind.

عاصفة ʕaaṣifa /n pl ʕawaaṣif/ gale, hurricane.

ع ص ف ر [1]
عصفر ʕuṣfur /n/ carthamus, safflower.
عصفر ʕaṣfar /vt/ *[cook]* to add safflower to. - ava/pva *miʕaṣfar*.
اتعصفر ʔitʕaṣfar /vi/ to have saf-flower added. - iva *mitʕaṣfar*.

ع ص ف ر [2]
عصفور ʕaṣfuur /n pl ʕaṣafiir/ **1** = *ʕaṣfuura*. ‖*lisaan il-ʕaṣfuur* grain-shaped pasta, graniamo. - *ʕaṣfuur fil-yadd' wala ʕaʃara ʕaf-ʃagara [prov]* ≈ a bird in the hand is worth two in the bush. **2** ornamental bird, cage-bird. *maḥall[a] ʕaṣafiir* bird shop.
عصفورة ʕaṣfuura /n pl ʕaṣafiir/ **1** sparrow, (loosely also) any small bird. ‖*daaqiq ʕaṣafiir* (tattooed with sparrows on each temple, after the manner of many Egyptian peasants; thus used to mean) naive, stupid, as in *ʃana m-anii-ʃ daaqiq ʕaṣafiir* ≈ I'm no country bumpkin, I'm no fool. *ʃil-ʕaṣafiir illi ʕala sdaar-i ṭaaru* I'm not as daft as I used to be. - *ʕaṣafiir baṭn-i bi-tzaqzaq* ≈ I'm ravenously hungry. **2a** small stick, peg, dowel, as for instance on yoke of plough (see Pl.D, 10, 12). **2b** wooden latch.

ع ص ل ج
عصلج ʕaṣlag **1** /vi/ **1a** to jib, balk, resist, be stubborn. *ʃil-bihiima ʕaṣlagit* the beast balked. *zaqqeet beet il-wild' w-baqa l-waad yifarfar taḥt' ʃiid-i wi-yʕaṣlag* I pressed on the womb and the child started to squirm and resist. *ʃil-masʃala mʕaṣlaga maʕaaya* I can't get anywhere with the problem. **1b** to jam, stick. *ʃil-baab miʕaṣlag* the door is stuck. **2** /vt/ to obstruct and jam. *law ma-ddet-luu-ʃ filuus kaan ḥa-yʕaṣlag-li l-mawḍuuʕ* if I hadn't given him money, he would have put a spanner in the works. - vn *ʕaṣlaga*; ava/pva *miʕaṣlag*.
اتعصلج ʔitʕaṣlag /vi/ to be jammed, be wedged. - iva *mitʕaṣlag*.

ع ص م
عصم ʕaṣam *(i)* /vt/ to protect, preserve. - vn *ʕaṣm*; ava *ʕaaṣim*; pva *maʕṣuum*.
عاصمة ʕaṣma, ʕaaṣima↑ /n pl *ʕawaaṣim*/ capital city.
عصمة ʕiṣma /n/ **1** matrimonial authority. *ʕala* (or *fi-) ʕiṣmit raagil* under the authority and protection of a man, married. **2** power of divorce. *ʃil-ʕiṣma fi-ʃid-ha* she has the right to (unilateral) divorce (by virtue of a stipulation in the marriage contract). *ṣaaḥibat il-ʕiṣma [obsol]* honorific title awarded to women.

عصامي ʕiṣaami /adj */ self-made, distinguished, successful.
معصم miʕṣam /n pl *maʕaaṣim*/ wrist.
اعتصم ʔitʕaṣam /vi/ to be protected, be preserved. - iva *mitʕiṣim*.
اعتصم ʔiʕtaṣam /vi/ to take refuge. - vn *ʔiʕtiṣaam*; ava *muʕtaṣim*.

ع ص ى [1]
عصى ʕiṣi *(a)* **1** /vt/ to disobey. *mazaag-u yiʕṣa l-ʃawaamir* he's fond of disobeying orders. **2** /vi/ to be obstinately disobedient, rebel. - vn *ʕaṣayaan, ʕiṣyaan*; ava *ʕaaṣi*; pva *maʕṣi*.
عصيان ʕaṣyaan /adj/ rebellious, recalcitrant, disobedient.
معصية maʕṣiya /n pl *maʕaaṣi*/ sin.
استعصى ʔistaʕṣa /vi/ to prove to be too resistant. *ʃazma staʕṣit ʕala l-ḥall* a crisis that defied all attempts at a solution. - vn *ʔistiʕṣa*; ava *mistaʕṣi, mustaʕṣi*.
مستعصى mustaʕṣi /adj/ incurable (of a disease).

ع ص ى [2]
عصا ʕaṣa /fem n, pl *ʕuṣy*/ stick, stave. ‖*liʕb il-ʕaṣa* (or *il-ʕuṣy)* quarterstaff fighting. - *ʃilli tʃuuf-u raakib ʕala ʕaṣa qul-lu mubaarak il-ḥuṣaan [prov]* (he whom you see mounted on a stick, tell him 'congratulations on your horse!') ≈ treat people as they wish to be treated.
عصاية ʕaṣaaya /n pl *-aat, ʕuṣy, ʕuṣyaan, ʕuṣyaan*/ stick, rod, staff. *bi-yimʃi b-ʕaṣaaya* he walks with a stick. *ʕaṣaayit daffa* tiller. *ʕaṣaaya fiiha singa* sword-stick.

ع ص ى [3]
العاصي ʔil-ʕaaṣi /prop n/ the (river) Orontes (in Syria).

ع ض د
عضد ʕaḍud /n/ upper arm.
عضد ʕaḍḍid /vt/ to help, assist, support. *bi-yʕaḍḍid il-wafd* he supports the Wafd party. - vn *taʕḍiid*; ava *miʕaḍḍid*.
معضد muʕaḍḍid /n */ supporter.
اتعضد ʔitʕaḍḍid /vi/ to be helped, be assisted, be supported. - iva *mitʕaḍḍid*.

ع ض ض
عض ʕaḍḍ *(u)* **1** /vt/ to bite. *ʃik-kalb[a] ʕaḍḍ-i-ni* the dog bit me. **2** /vi/ to perform the action of biting. *ʕaḍḍ[a] ʕala lisaan-u* he bit on his tongue. - vn *ʕaḍaḍaan, ʕaḍḍ*; ava *ʕaaḍiḍ*; pva *maʕḍuuḍ*.

عضّه ʕaḍḍa /inst n, pl -aat/ **1** a bite. **2** *[dent]* block for taking a mould.
عضّاض ʕaḍḍaaḍ /adj */ given to biting.
اتعضّ ʔitʕaḍḍ /vi/ to be bitten. -iva *mitʕaḍḍ*.
انعضّ ʔinʕaḍḍ = ʔitʕaḍḍ.

ع ض ع ض
عضعض ʕaḍʕaḍ /vt/ to gnaw, nibble. *bi-yʕaḍʕaḍ ḍawafr-u* he bites his nails. *ʔil-maqaṣṣ[a] ʕaḍʕaḍ il-waraqa* the scissors chewed up the paper. *ʕirf[i] mʕaḍʕaḍ* a badly-dented piastre coin. -vn *ʕaḍʕaḍa*; ava/pva *miʕaḍʕaḍ*.
اتعضعض ʔitʕaḍʕaḍ /vi/ to be gnawed, be nibbled. -iva *mitʕaḍʕaḍ*.

ع ض ل
عضل ʕaḍal /coll n/ muscle(s). *ḥuqna fil-ʕaḍal* intramuscular injection. -/adjectivally/ *raagil ʕaḍal* a muscle-man, a brawny man.
عضلة ʕaḍala /unit n, pl -aat/ a muscle. ‖*bi-yʕaamil in-naas bi-ʕaḍalaat-u* he treats people roughly, he pushes people around.
عضلي ʕaḍali /adj/ pertaining to the muscles, muscular. *tawaafuq ʕaḍali* muscular co-ordination.

ع ض م
عظم، عضم ʕaḍm /coll n, pl ʕiḍaam, ʕiẓaam/ **1** bone(s). *ʔaliil il-baxt[i] bi-ylaaʔi l-ʕaḍm[i] fik-kirʃa [prov]* the unlucky man finds bones in tripe. ‖*kalaam fil-ʕaḍm* wounding words. -*ʕaḍm-u ṭari* he is a weak and immature character. -*duktoor ʕiẓaam* orthopaedist. **2** frame, skeleton. *ʕaḍm ik-kursi* the frame of the chair.
عظمة، عضمة ʕaḍma /unit n, pl -aat/ a bone. ‖*ʕaḍma xiʃna* an influential person, a bigwig. -*ʔaal-u b-ʕaḍmit lisaan-u* he himself said it. -*ʕaḍma zarʔa* pejorative epithet for Copts.
عضماية ʕaḍmaaya /inst n, pl -aat/ a (small) bone.
عظمي ʕaẓmi /adj/ of or pertaining to bone(s). *haykal ʕaẓmi* skeleton.
عضّم ʕaḍḍam /vi/ **1** to become (as) hard (as bone). **2** to become bony. *kibir sinn-u w-ʕaḍḍam* he grew old and lean. -ava *miʕaḍḍam*.
استعضم ʔistaʕḍam /vt/ **1** to select for boniness. **2** to consider (too) bony. *ʔistaʕḍam il-xaruuf* he thought the lamb to be too bony (and wouldn't take it). -vn *ʔistiʕḍaam*; ava/pva *mistaʕḍam*.

ع ض و
عضو ʕuḍw /n pl ʔaʕḍaaʔ/ **1** member. *ʔaʕḍaaʔ il-lagna* the members of the committee. **2** organ (of the body).
عضوي ʕuḍwi /adj/ organic. *ʔil-kimya l-ʕuḍwiyya* organic chemistry. *ɣeer ʕuḍwi* inorganic.
عضويّة ʕuḍwiyya /n/ membership. *kart[a] ʕuḍwiyya* membership card.

ع ط ر د
عطارد ʕuṭaarid /prop n/ *[astron]* Mercury.

ع ط ب
عطب ʕaṭab /n/ damage. *ḥaṣar il-ʕaṭab* he estimated the damage.
معطوب maʕṭuub /adj/ damaged. *gaat iṭ-ṭuuba fil-maʕṭuuba* (the stone came against that which was (already) damaged) there was a coincidence of unfortunate circumstances.
عطّب ʕaṭṭab /vi/ to rot, perish (especially of fruit and vegetables). -vn *taʕṭiib*; ava *miʕaṭṭab*.

ع ط ر
عطر ʕiṭr (also ʕitr↓) /n pl ʕuṭuur/ **1** perfume. *ʕiṭr il-ward* attar of roses. **2** geranium, stork's-bill. ‖*ʕiṭr[i] ʃaahi* sweet pea.
عطري ʕiṭri /adj/ pertaining to perfume, odoriferous, fragrant, aromatic. *ziyuut ʕiṭriyya* essential oils (for perfume). *ṣabuun ʕiṭri* scented soap.
عطارة ʕiṭaara /n/ **1** spices and herbs. **2** spice and herb trade.
عطّار ʕaṭṭaar /n */ herbalist and seller of spice. ‖*ḥaaga tfawwit il-ʕaṭṭaar xurg-u* ≈ a thoroughly exasperating matter.
عطّر ʕaṭṭar /vt/ to perfume. -vn *taʕṭiir*; ava/pva *miʕaṭṭar*.
¶ *ʕaṭṭar li-*↓ to purchase the *gihaaz* for (a bride-to-be). *ḥa-nʕaṭṭar-laha min maṣr* we'll buy everything for her *gihaaz* in Cairo.
معطّراتي miʕaṭṭaraati /n pl -yya/ perfume-seller.
اتعطّر ʔitʕaṭṭar /vi/ **1** to be perfumed. **2** to perfume oneself. -ava/iva *mitʕaṭṭar*.

ع ط س
عطس ʕiṭis *(a)* /vi/ to sneeze. -vn *ʕaṭs, ʕiṭaas, ʕuṭaa[ʔ], ʕaṭasaan*; ava *ʕaaṭis*.
عطاس ʕiṭaas, ʕuṭaas /n/ sneezing. *ʔid-dawa da bi-ysabbib il-ʕuṭaas* this medicine induces sneezing.
عطسة ʕaṭsa /inst n, pl -aat/ a sneeze.
عطّس ʕaṭṭas **1** /vt/ to cause to sneeze. **2** /vi/ to sneeze (repeatedly or violently). -vn *taʕṭiis*; ava/pva *miʕaṭṭas*.

¹ ع ط ش

عطس *ɛiṭiṣ (a)* /vi/ **1** to become thirsty. *lamma yiɛṭaṣ fiwayya yballil riiq-u b-ħaaga* when he gets thirsty he wets his whistle with something. **2** to become parched (of land). - vn *ɛaṭaṣ*.

عطش *ɛaṭaṣ* /n/ thirst.

عطشان *ɛaṭṣaan* /adj */ **1** thirsty. *yiwaddii l baħr' wi-ygiib-u ɛaṭṣaan [prov]* (he takes him to the river and brings him back thirsty) he can twist him round his little finger. **2** parched. *ʕil-ʕarḍ[a] ɛaṭṣaana* the land needs watering.

² ع ط ش

عطشجى *ɛaṭaṣgi* <T *ateşçi*> /n pl *-yya*/ stoker, fireman (on a locomotive).

ع ط ط

عطّ *ɛaṭṭ (a)* /vi/ to live an unsettled life. - vn *ɛaṭaṭaan, ɛaṭṭ*; ava *ɛaaṭiṭ*.

عطّاط *ɛaṭṭaaṭ* /n * and pl *ɛaṭṭaaṭa*/ vagabond.

¹ ع ط ف

عطف *ɛaṭaf (i)* /vi/ to show sympathy or concern (either verbally or through practical aid). *ɛaṭafit ɛalee* she sympathized with him. *bi-yiɛṭif ɛala xalq illaah* he helps (poor) people. - vn *ɛaṭf*; ava *ɛaaṭif*.

عطف *ɛaṭf* /n/ sympathy, affection. *ħaramuu mil-ɛaṭf* they deprived him of affection.

عاطفة *ɛaaṭifa* /n pl *ɛawaaṭif*/ feeling, emotion, sentiment, passion. *ʕil-ħubb' ʕaɛẓam ɛaaṭifa fil-wuguud* love is the greatest emotion in existence. *ʕil-kukayiin bi-yiqtil ɛawaṭf-ak* cocaine deadens your feelings.

عاطفى *ɛaaṭifi* /adj */ **1** emotional. *muqabla ɛaaṭifiyya* an emotional meeting. **2** sentimental. *ɣinwa ɛaaṭifiyya* a sentimental song.

¶ *ɛaaṭifiyyan* /adj/ emotionally.

عطوفة *ɛuṭuufa: ṣaaħib il-ɛuṭuufa [obsol]* form of address and reference to a high-ranking pasha ≈ Excellency.

عطوفتلو *ɛuṭufitlu* /n/ *[obsol]* form of address and reference to a high-ranking pasha ≈ Excellency.

اتعطف *ʔitɛaṭaf* /vi/ (impersonal) passive of *ɛaṭaf*. *ʕil-yataama laazim yitɛiṭif ɛaleehum* orphans should be treated compassionately. - iva *mitɛiṭif*.

اتعطّف *ʔitɛaṭṭaf* /vi/ to show kindness. - ava *mitɛaṭṭaf*.

اتعاطف *ʔitɛaaṭif* /vi/ to be mutually affectionate or sympathetic. - vn *taɛaaṭuf*; ava *mitɛaaṭif*.

استعطف *ʔistaɛṭaf* /vt/ to beg for kindness. - vn *ʔistiɛṭaaf*; ava/pva *mistaɛṭaf*.

² ع ط ف

عطفة *ɛaṭfa* /n pl *-aat*/ alley, (originally) small lane leading off a *darb* within an enclosed quarter.

ع ط ل

عطل *ɛiṭil (a)* /vi/ **1** to break down. *ʕil-makana ɛiṭlit* the machine has broken down. **2** to become idle, stop working. - vn *ɛuṭl*; ava *ɛaaṭil*.

عطل *ɛuṭl* /n pl *ʕaɛṭaal*/ breakdown. *ʕaɛṭaal il-kahraba* breakdowns in the supply of electricity.

عطلة *ɛuṭla* /n/ holiday. *bukra ɛuṭla* tomorrow's a holiday. *ɛuṭlit il-ʕusbuuɛ* weekly day off. ‖*sanit il-ɛuṭla [Jud]* Sabbatical Year.

عاطل *ɛaaṭil* /adj */ jobless. ‖*ɛaaṭil ɛala baaṭil* ≈ incessantly and to no purpose. - *ʕil-ɛaaṭil fil-baaṭil* ≈ all and sundry, without discrimination, as in *ga l-buliiṣ xad-hum ɛaṭil-hum fi-baṭil-hum* the police came and took them all in.

عواطلى *ɛawaṭli* /n pl *-yya*/ loafer, shirker.

عطلان *ɛaṭlaan* /adj */ **1** out of order, broken down. **2** idle, out of action, unemployed.

عطلة *ɛaṭala* /n/ **1** delay. **2** holiday.

عطّل *ɛaṭṭal* /vt/ **1** to hold up, delay. *ʕiyyaa-k m-akun-f' ɛaṭṭalt-ak ɛan fuxl-ak* I hope I haven't kept you from your work. *rabb-i-na dayman bi-yurzuq-na bi-lli bi-yɛaṭṭal-na* ≈ someone always comes along to delay us. *qaɛad yirxi maɛaaya l-ɣaayit ma ɛaṭṭal-ni* he sat chattering with me till he made me late. **2a** to cause to break down, cause to stop working. *ʕil-ħaraara ɛaṭṭalit il-makan* the heat made the machines break down. **2b** to invalidate, overrule. *fii qawaniin bi-tinsax qawaniin wi-tɛaṭṭal ʕaḥkam-ha* there are laws that abrogate laws and invalidate their stipulations. - vn *taɛṭiil*; ava/pva *miɛaṭṭal*.

اتعطّل *ʔitɛaṭṭal* /vi/ **1** to be delayed, be held up. *ʔitɛaṭṭalt' fis-sikka* I was delayed on the way. **2** to break down. *ʕil-makana tiftaɣal ʃiwayya w-titɛaṭṭal ʃiwayya* the machine works for a while and then breaks down for a while. **3** to be invalidated, be overruled. - ava/iva *mitɛaṭṭal*.

متعطّل *mitɛaṭṭal* /adj */ unemployed.

ع ط ن

عطن *ɛaṭan (u)* /vt/ **1** to soak, steep, macerate, ret (e.g., flax). **2** to cause to become rotten or decayed (through soaking). - vn *ɛaṭn, ɛaṭiin*; ava *ɛaaṭin*; pva *maɛṭuun*.

معطن *maɛṭan* /n pl *maɛaaṭin*/ tub for soaking flax.

اتعطن *ʔitɛaṭan* /vi/ **1** to be soaked, be macerated, be retted (of, e.g., flax). **2** to become or be made rotten or

decayed (through soaking). - ava/iva *mitɛiṭin*.

عطّن *ɛaṭṭan* **1** = *ɛaṭan*. **2** /vi/ to rot, become rotten. - vn *taɛṭiin*; ava/pva *miɛaṭṭan*.

اتعطّن *ʔitɛaṭṭan* = *ʔitɛaṭan*. - ava/iva *mitɛaṭṭan*.

ع ط ي

عطى *ɛaṭa*[1] *(i)* /vt/ **1** to give. *rabb-i-na yiɛṭii-k il-ɛafya* God give you strength. *ʔallaah yiɛṭii-k* may God give to you (said in dismissing a beggar). ‖*yiɛṭi ʃabah* (or *malaamiḥ) li-* he looks like, as in *yiɛṭi ʃabah li-ʔabuu* he looks like his father. *-ɛaṭa ẋabar (li-)* to notify. *-ʔil-ʔaxd*[i] *wil-ɛaṭa* (1) give and take. (2) exchange (of conversation). (3) trade, commerce. *-ʃarṭ il-ʔaxd il-ɛaṭa [prov]* receiving is conditional upon giving. **2** to transmit (a telegram). *bi-yiɛṭi t-tilliɣraaf bit-tiribirintir* he transmits the telegram by teleprinter. - vn *ɛaaṭa*; ava *ɛaaṭi*; pva *maɛṭi*.

عطاء *ɛaṭa*[2] /n pl *ɛaṭaʔaat*/ tender. *ʔif-firka ʔiddit ɛaṭa* the company submitted a tender. *rasa ɛalee l-ɛaṭa* he was awarded the tender.

عاطي *ɛaaṭi* /n/ Giver (epithet of God).

عطيّة *ɛaṭiyya* /n pl *-aat*/ gift.

اتعاطى *ʔitɛaaṭa* /vt/ to administer to oneself, take (addictive drugs, alcohol, etc.). *baṭṭal il-bitaaɛ illi b-titɛaṭaa da* give up that miserable addiction of yours! - ava/pva *mitɛaaṭi*.

أعطى *ʔaɛṭa* /vt/ to give. - vn *ʔiɛṭa, ʔiɛṭaaʔ*; ava *muɛṭi*.

معطي *muɛṭi* /n/ Giver (epithet of God).

استعطى *ʔistaɛṭa*↓ = *ʔitɛaaṭa*.

ع ظ see و ع ظ : *ɛiẓa*

ع ظ م[1]

عظما *ɛaẓaman: qasaman ɛaẓaman* ≈ by my (greatest) oath! (said when swearing to do something against the will of others).

عظمة *ɛaẓama* /n/ splendour, grandeur, majesty. *ɛaẓamit il-ḥaḍaara l-maṣriyya* the splendour of Egyptian culture. *lelit-na ḥa-tkuun ʕin ʃaaʔ allaah ʔaaxir ɛaẓama* we're going to have a really splendid night, God willing. ‖*ʔeeh il-ɛaẓama di* ≈ what a splendid thing! - *ʔil-ɛaẓama li-llaah (waḥd-u)* ≈ don't put on airs! - /adjectivally/ *ḥaaga ɛaẓama* a splendid thing.

عظمى *ɛuẓma* /fem el/ greatest. ‖*ʔil-ḥarb il-ɛuẓma* the First World War. - *ʔid-daynuuna l-ɛuẓma* the Last Judgement. - *ʔil-qiima l-ɛuẓma [math]* maximum value.

أعظم *ʔaɛẓam* /el/ greater/greatest etc. *ʔil-ḥubb*[i] *ʔaɛẓam ɛaaṭifa fil-wuguud* love is the greatest emotion in existence.

عظيم *ɛaẓiim* /adj pl *ɛuẓama, ɛiẓaam, ɛuẓaam*/ great, mighty, magnificent. *(da) ɛaẓiim* (that's) great! (that's) marvellous! *w-allaahi l-ɛaẓiim* (by) Almighty God! ‖*salaam ɛaẓiim [mil]* salute to a senior officer.

عظايم *ɛaẓaayim* /pl n/ disasters, catastrophes. *yaama staḥmilna ɛaẓaayim il-ʔumuur* how many disasters we have borne!

عظّم *ɛaẓẓam* **1** /vt/ to make great, attribute greatness to, be deferential to. *da ɋaaɛid yiɛaẓẓam-ni miṣ-ṣubḥ* the guy has been bowing and scraping to me all morning. ‖*ɛaẓẓam allaahu ʔagr-u-kum* God make great your recompense! (a formula of condolence to the bereaved). *ʃahr*[i] *ramaḍaan il-muɛaẓẓam* the glorious month of Ramadan (conventional form of reference to the fasting month). **2** /vt and vi/ to salute. *laazim tiɛaẓẓam (l)iẓ-ẓaabiṭ* you must salute officers. - vn *taɛẓiim*; ava/pva *miɛaẓẓam, muɛaẓẓam*.

تعظيم *taɛẓiim* /n pl *-aat*/ salute.

معظّم *miɛaẓẓam* or *muɛaẓẓam* /adj/ magnifying. *naḍḍaara mɛaẓẓama* (1) binoculars. (2) telescope. (3) magnifying glass.

اتعظّم *ʔitɛaẓẓam* /vi/ passive of *ɛaẓẓam*. - iva *mitɛaẓẓam*.

معظم *muɛẓam* /n, in constr state/ most of, the majority of. *muɛẓam maḥaṭṭaat il-ʔutubiis fil-hawa ṭ-ṭalq* most bus stops are in the open.

استعظم *ʔistaɛẓam* **1** /vt/ to consider (too) great. *mistaɛẓam il-ɛamaliyya* he thinks the operation too big. **2** /vi/ to behave proudly. *ʔinta mistaɛẓam ɛala ʔeeh* why are you behaving in this stand-offish way? - vn *ʔistiɛẓaam*; ava/pva *mistaɛẓam*.

ع ظ م[2] see ع ض م

ع ف ا ر م

عفارم *ɛafaarim* <T *aferim* from P> /interj/ well done! bravo! *ɛafaarim ɛaleek* good for you!

ع ف ر

عفر *ɛafr* /n/ dust. *zoor-i miṭhaaf min ɛafr is-sikka* my throat is clogged with the dust of the road.

عفرة *ɛafara* /n/ cloud of dust.

عفار *ɛufaar* /n/ dust.

عفارة *ɛufaara* /n/ dust.

عفير *ɛafiir* /n/ sowing by scattering over dry ground.

عفّر *ɛaffar* /vt/ **1** to make dusty. **2** to spray with (insecticidal) powder. *ɛaffaru l-beet ɛafaan iṣ-ṣaraṣiir* they sprayed the house against the cockroaches. — /vi/ **3** to raise dust. *ʔil-hawa yṣaffar wi-yɛaffar* the wind whistles

and raises the dust. *ʕik-kannaas ɛaffar ɛaleena* the sweeper got dust over us. **4** *[slang]* to smoke. *bi-yɛaffar ṭuul in-nahaar* he smokes all day long. - vn *taɛfiir*; ava/pva *miɛaffar*.

معفّراتي *miɛaffaraati* /n pl *-yya*/ one who sprays insecticidal powder.

اتعفّر *ʔitɛaffar* /vi/ **1** to be made or become dusty. **2** to be sprayed with (insecticidal) powder. - ava/iva *mitɛaffar*.

عافر *ɛaafir* /vi/ to struggle, strive. *baqaa-li saaɛa b-aɛaafir maɛa n-noom* I've been struggling to get to sleep for an hour. ‖*raagil miɛaafir* (1) an industrious man, an eager beaver. (2) a finicky man. - vn *miɛafra*; ava *miɛaafir*.

اتعافر *ʔitɛaafir* /vi/ (impersonal) passive of *ɛaafir*. *da ʔahbal - ma-yitɛafir-ʃ' maɛaa* he's stupid - it's no good trying (to argue) with him. - iva *mitɛaafir*.

ع ف ر ت

عفريت *ɛafriit* /n pl *ɛafariit*/ demon or ghost (of either sex). ‖*walad ɛafriit* (1) a naughty child. (2) a cunning lad. - *rakb-u* (or *ɛalee*) *ɛafriit* (1) he's possessed by a demon. (2) he's in a bad humour, he's likely to blow up if provoked. - *ɛafriit in-niswaan* child's toy whistle or the like which extends when blown. - *ɛafriit il-ɛilba* jack-in-the-box. - *ɛafariit il-leel [obsol]* street-lamp lighters. - *ʈallaɛu l-ɛafariit fi-ɛeen-i* they gave me a really hard time. - *ʔilli yxaaf min il-ɛafriit yiʈlaɛ-lu [prov]* (he who fears a demon, will have a demon appear to him) ≈ too much fear of something may cause it to occur. - *ɛala kaffᵘ ɛafriit* ≈ in a precarious situation. - *budrit il-ɛafriit* itching powder. - *ɛafriit yiʈallaɛ ɛafriit* ≈ it takes a thief to catch a thief. - *ɛafriit nafriit* a very crafty person. - *raaḥ wi-rigiɛ zayy il-ɛafriit* he went there and back in no time. - *ʔil-filuus fiiha ɛafriit [prov]* ≈ money slips through one's fingers.

عفريتة *ɛafriita* /n pl *ɛafariit, ɛafritaat*/ **1** demon or ghost (of either sex). **2** workman's overalls, boiler suit. **3** (car) jack. **4** negative (of a film). **5** wooden cone-like device for measuring and adjusting the size of bracelets and rings. **6** *quṭn il-ɛafriita* cotton waste.

عفاريتي *ɛafariiti* /adj/ devilish.

عفرت *ɛafrat* /vt/ **1** to cause to behave wilfully and mischievously, turn (e.g., a child) into a little demon. *ʔawlaad ig-giraan ɛafratuu xaaliṣ* the neighbours' children have turned him into a real little demon. **2** to drive crazy (with anger, worry, frustration etc.). *ʔeeh illi ɛafrat-ak kida* what's made you so angry? *ginn' lamma yɛafrat-ak [abus]* may demons possess you! - vn *ɛafrata*; ava/pva *miɛafrat*.

اتعفرت *ʔitɛafrat* /vi/ passive of *ɛafrat*. - iva *mitɛafrat*.

ع ف ر م see ع ف ا ر م : *ɛafaarim*

ع ف ش

عفش *ɛaff* /coll n/ **1a** furnishings, household chattels. *faqqa bil-ɛaff* a furnished flat (for sale, rather than for rent). **1b** luggage, baggage. *sibtᵘ ɛaff-i fil-ʔamanaat* I left my luggage at the left-luggage office. **2** weeds, debris and stubble from harvested crops. ‖*ɛaff' naff* useless or worthless things. **3** offal.

عفشه *ɛaffa* **1** /coll n/ **1a** small bits of weed and debris from harvested crops, chaff, chips, motes. *xud ir-ruzz' da naqqi minnu l-ɛaffa* take this rice and clean the chaff from it. **1b** offal. **2** /n pl *-aat*/ small bit of weed or crop debris, speck of chaff, chip, mote. *fii ɛaffa daxalit fi-ɛeen-i* there's a speck in my eye. **3** /no pl/ *[euphem]* bathroom, lavatory. *faqqa b-ɛaffit-ha* a flat with a bathroom. *ɛaffit mayya* lavatory. **4** *[auto]* steering gear components including track rod, drop arm, control arm, and swivel bearing. *ʔirfaɛ il-ɛarabiyya w-rabbaṭ il-ɛaffa* hoist the car and tighten the steering linkages.

عفساية *ɛaffaaya* = *ɛaffa* 2.

عفش *ɛifiʃ* /adj */ untidy, messy.

عفشة *ɛafaʃa* /n/ untidiness, messiness.

عفاشة *ɛafaaʃa* /n/ weeds, debris and stubble from harvested crops. ‖*ɛafaaʃa min in-naas* good-for-nothing people.

عفّش *ɛaffiʃ* /vi/ **1** to collect useless things. **2** to scatter things about. - vn *taɛfiiʃ*; ava *miɛaffiʃ*.

ع ف ص

عفص *ɛafṣ* /n/ *[bot]* Arbor vitae, gall-nut (from which ink is made).

عفّص *ɛaffaṣ* /vt/ to dirty, soil. - vn *taɛfiiṣ*; ava/pva *miɛaffaṣ*.

اتعفّص *ʔitɛaffaṣ* /vi/ to become or be made dirty. - ava/iva *mitɛaffaṣ*.

ع ف ط

عفّاطة *ɛuffaaṭa* /n/ *[non-Cairene]* six-holed single-reed pipe shorter and thicker than the *naay*. - also *ḫuffaaṭa*.

عفّط *ɛaffaṭ* /vi/ *[non-Cairene]* to play the *ɛuffaaṭa*. - vn *taɛfiiṭ*; ava *miɛaffaṭ*.

اتعفّط *ʔitɛaffaṭ* /vi/ (impersonal) passive of *ɛaffaṭ*. *ʔit-taɛabiin bi-yitɛaffaṭ laha* snakes have pipe music played to them. - iva *mitɛaffaṭ*.

ع ف ᵓ

عفّ *ɛaffᵓ (i)* /vi/ to abstain, refrain (from s.th. wrong

or indecent). *bi-yɛiff^{a} ɛan is-sirɣa* he would never steal. - ava *ɛaafif*.

عفّة *ɛiffa* /n/ chastity, modesty, decency.

عفوف *ɛafuuf* = *ɛafiif*.

عفيف *ɛafiif* /adj/ chaste, decent. *ɛandaha nafs^{a} ɛafiifa* she's a decent, self-respecting person.

أعفّ *ʔaɛaff* /el/ more/most chaste or decent.

عفّف *ɛaffif* /vt/ to make chaste, make (s.o.) live a decent life. *ʔana lli ʔaqdar ʔaɛaffif-ha* I'm the one who can make a respectable woman of her. - ava/pva *miɛaffif*.

اتعفّف *ʔitɛaffif* /vi/ **1** to be made chaste, be made respectable. **2** = *ɛaff^{1}*. - ava/iva *mitɛaffif*.

استعفّ *ʔistaɛaff* = *ɛaff^{1}*. - ava *mistiɛiff*.

ع ف ف^{2}

عفّ *ɛaff^{2} (i)* /vi/ to gather (of flies etc.). *ʔid-dibbaan ɛaff^{a} ɛala l-ʔakl* the flies settled on the food. - vn *ɛaff, ɛafafaan*; ava *ɛaafif*.

ع ف ق

عفق *ɛafaq (a)* /vt/ to grab hold of. *ɛafaqt-u min raqabt-u* I grabbed him by the neck. - vn *ɛafq, ɛafaqaan*; ava *ɛaafiq*; pva *maɛfuuq*.

عفقة *ɛafqa* /inst n, pl *-aat*/ a grab.

اتعفق *ʔitɛafaq* /vi/ to be grabbed. - iva *mitɛifiq*.

عفّق *ɛaffaq* /vt/ to grab (a number of things or a number of times). *ʔil-buliis ɛaffaq-hum kull-u-hum* the police caught them all. - vn *taɛfiiq*; ava/pva *miɛaffaq*.

تعفيقة *taɛfiiqa* /inst n, pl *-aat*/ a grab.

اتعفّق *ʔitɛaffaq* /vi/ passive of *ɛaffaq*. - iva *mitɛaffaq*.

ع ف ل ص

عفلص *ɛaflaṣ* /vi/ to struggle. - vn *ɛaflaṣa*; ava *miɛaflaṣ*.

اتعفلص *ʔitɛaflaṣ* = *ɛaflaṣ*. - ava *mitɛaflaṣ*.

ع ف ن

عفن *ɛafan* /n/ **1** decay, rottenness. **2** rot, mould.

عفن *ɛifin* /adj/ decayed, rotten, putrid, septic.

عفان *ɛafaan* /n/ mould, mildew.

عفانة *ɛafaana* /n/ rottenness. *fii riiḥit ɛafaana fil-ʔooḍa* there is a smell of decay in the room.

عفونة *ɛufuuna* /n/ rottenness, putridity. ‖*ɛandu ɛufuuna f-baṭn-u* he has an upset stomach producing foul gases.

عفّن *ɛaffin* **1** /vt/ to rot, cause to decay or go mouldy. *ʔil-ḥarr^{a} ɛaffin il-ɛeef* the heat made the bread go mouldy. **2** /vi/ **2a** to rot, go putrid. **2b** to become septic. - vn *taɛfiin*; ava *miɛaffin*.

اتعفّن *ʔitɛaffin* /vi/ to become or be made rotten or putrid. - vn *taɛaffun*; ava/iva *mitɛaffin*.

ع ف و

ع ف و see ع ف ى : *ɛafw, ɛafwan*

ع ف و ن

ع ف و ن see also ع ف ى

عفونة *ɛafwana* /n/ strength, force, violence.

اتعفون *ʔitɛafwin* /vi/ **1** to grow strong, become vigorous. **2** to act the tough guy. - ava *mitɛafwin*.

ع ف ى

عفى *ɛafa^{1} (i)* **1** /vt/ to exempt, spare. *ʔiɛfii-ni ya beeh* let me off, sir! allow me not to do what you want. **2** /vi/ to grant exemption or forgiveness. *tawfiiq saamiḥ ɛuraabi w-ɛafa ɛannu* Tawfiq forgave Urabi and spared him. *rabb-i-na yiɛfi ɛannak* may God grant you forgiveness. - vn *ɛafw*; ava *ɛaafi*; pva *maɛfi*.

عفو *ɛafw* /n/ pardon. *ya rabb^{a} ɛafw-ak* O Lord forgive me. *ɛafw^{a} ɛaamm* amnesty. ‖ *ʔil-ɛafw* (or *ɛafwan*) disclamatory exclamation to one who thanks one, compliments one, or makes an insinuation against one, as in *ʃukran*. - *ʔil-ɛafw* 'Thank you.' 'Not at all, you're welcome.', *zar-na n-nabi n-nahar-da*. - *ʔil-ɛafw* 'We're most honoured by your visit.' 'You're too kind.' *ʔinti fakra nafs-ik ʔaḥsan minni walla ʔeeh*. - *ʔil-ɛafw^{i} ya sitt^{i} haanim* - *ʔil-ɛeen ma-tiɛlaa-f ɛan il-ḥaagib* 'You think yourself better than me, or what?' 'No, no, Ma'am, I'd never forget my place!'

¶ *ɛafwan* = *ʔil-ɛafw*. see further under ع ف و ن

عافى *ɛaafi* **1↓** /adj */ strong, vigorous, healthy. **2** /n/: *ya ʃaafi ya ɛaafi* O Healer and Giver of strength (addressed to God).

عافيه *ɛafya* /n/ good health, vigour. *ma-fhuu-ʃ ɛafya* he has no strength left. ‖ *bi-ṣiḥḥa w-ɛafya* ≈ may it give you health and strength (said to one eating or drinking). - *kaan bi-ɛafya* he was unwell. - *xallii-ku b-ɛafya* or *ʔuqɛudu bi(l)-ɛafya [women in trad soc]* ≈ take care (said in farewell).

¶ *bil-ɛafya* /adv/ (1) by force. *gawwizuu-ha bil-ɛafya* they forced her to marry. (2) only just, barely. *ʔil-ɛarabiyya maʃya bil-ɛafya* the car can barely go. *ʔil-ḥarr^{i} bi-yxalli l-waaḥid yiʃtaɣal bil-ɛafya* the heat leaves one barely able to work. *ʔana ɛaayiʃ bil-ɛafya* I can only just get by.

عواف *ɛawaaf* or *ɛawaafi* or *ʔil-ɛawaafi* a greeting used by and to women in traditional society. ‖*noom il-ɛawaafi* sleep soundly! - *ḍarab ɛaleeha ɛawaafi* he took it and never mentioned it again.

عفا *ɛafa^{2}* /n/ health, strength, vigour. *ʔid-dafa ɛafa*

[prov] ≈ keeping warm keeps you well.

عفى *ʕafi, ʕafiy* /adj */ strong, vigorous, robust, healthy. *diḥka ʕafiyya* a hearty laugh.

أعفى *ʔaʕfa¹* /el/ more/most strong, vigorous etc.

اتعفى *ʔitʕafa* /vi/ **1** to be exempted. *ʔitʕafa mil-xidma fig-geef* he was exempted from military service. **2** (impersonal) passive of *ʕafa¹* 2. *ʔil-ʔaxṭaaʔ iṣ-ṣuɣayyara laazim yitʕifi ʕanha* the small mistakes should be forgiven. - ava/iva *mitʕifi*.

عافى *ʕaafa* /vt/ **1** to give strength or well-being to (of God). *ʔallaah yiʕaafi badan-ak* ≈ may God give you strength! *ʔallaah yiʕafii-k* response to *ʕawaaf* (q.v.). *ʕafaa-kum allaah* response to *bi-ṣiḥḥa w-ʕafya* (q.v.). **2** to exempt, spare. *ḥa-yʕafuu-k mig-geef ʕaʔaan il-walda* they will exempt you from military service on account of your mother. - vn *miʕafiyya, muʕafaah*; ava/pva *miʕaafi*; pva *muʕaafa*.

معافاة *muʕafaah* /n/ exemption, dispensation.

اتعافى *ʔitʕaafa* /vi/ **1** to grow strong, vigorous, healthy or powerful. **2** to be exempted. - ava/iva *mitʕaafi*.

أعفى *ʔaʕfa²↑* = *ʕafa*. - vn *ʔiʕfa, ʔiʕfaaʔ*; ava *miʕfi, muʕfi*; pva *muʕfa*.

إعفاء *ʔiʕfa, ʔiʕfaaʔ↑* /n pl *ʔiʕfaʔaat*/ exemption. *ʔiʕfaaʔ ḍariibi* tax exemption.

استعفى *ʔistaʕfa↓* /vi/ to resign. *ḍaddimt' ṭalab istiʕfa* I submitted my resignation. - vn *ʔistiʕfa*; ava *mistaʕfi*.

ع ق ب

عقب *ʕaḍb* /n pl *ʕuḍúba, ʕuḍbaan*/: *ʕaḍb il-baab* the bottom of the door.

عقب *ʕuḍb* **1** /prep/ after. *taʕaala ʕuḍb iz-ziyaara* come after visiting hours. **2** /n pl *ʕiḍaab, ʔaʕḍaab*/ end, tail-end. *ʕuḍb' sgaara* cigarette butt.

عقوبة *ʕuḍuuba* /n pl *-aat*/ punishment. *ʕuḍuubit il-ḍatl' hiyya l-ʔiʕdaam* the penalty for murder is death. *qanuun il-ʕuḍubaat* the penal code.

عاقبة *ʕaaḍiba↑, ʕaḍba* /n pl *ʕawaaḍib, ʕawaaḍib*/ outcome. *rabb-i-na ygiib il-ʕawaaḍib saliima* may God make things turn out right!

عقّب *ʕaḍḍab* /vt/ to pick through the seeds of, sift (clover). - vn *taʕḍiib*; ava/pva *miʕaḍḍab*.

¶ *ʕaḍḍab* (or *ʕaḍḍab↑*) *ʕala* to comment upon.

عاقب *ʕaaḍib↑, ʕaaḍib↑* /vt/ to punish. *yagib muʕaḍbit il-masʔuul* the one responsible must be punished. - vn *muʕaḍba, muʕaaḍaba, ʕiḍaab*; ava *miʕaaḍib, muʕaaḍib*.

عقاب *ʕiḍaab* /n/ penalty, punishment.

ع ق ب ا ل

عقبال *ʕuḍbaal* /interj/ may it be the same (for) ...! (used in formulae of (usually) good wishes or response to congratulations on happy occasions). *ʕuḍbaal-ak* may you be similarly fortunate (or unfortunate)! *ʕuḍbaal ʕandukum gamiiʕan* may you all be so fortunate! *ʕuḍbaal wilaad-ak* may your children be as lucky! *ʕuḍbaal yoom-ak* may you have such a (happy) day (to celebrate)! *ʕuḍbaal ʔamalt-ak* may you gain what you hope for too! *ʕuḍbaal-ak lamma tisḍaṭ ʔinta kamaan* just wait till you fail too! ‖*ʕuḍbaal farbaat il-faraḥ* may we drink sherbet at your wedding party! (to one's host, when drinking sherbet). - *ʕuḍbaal miit sana* (may it be the same for a hundred years) ≈ many happy returns! ¶ *ʕuḍbaal ma* /conj/ (1) until. *ʔistanna ʕuḍbaal m-agiib il-fluus* wait till I get the money. (2) by the time that. *ʕuḍbaal ma yiwṣal ig-gawaab ḥa-ykuun saafir* by the time the letter arrives he will have already left. (cf. *ʕa-baal ma* under ² ب ل ى).

ع ق د

عقد *ʕaḍad (i, u)* /vt/ **1** to knot, tie a knot in. **2** to form, produce. *baʕd' fwayya nawwaar il-ḍuṭn' yiʕḍid looz ʔaxḍar* after a while, cotton blossoms form green bolls. **3** *[cook]* to thicken by boiling. *sukkar maʕḍuud* sugar boiled down with lemon juice and water to produce (1) a syrup used in cooking. (2) a depilatory of a waxy consistency. **4↑** (also *ʕaḍad*) to convene (e.g., a meeting). - /the literary passive form occurs/ *maglis if-faʕb' b-yuʕḍad li-munaḍfit qararaat il-ḥukuuma* the People's Assembly is convened to discuss the decisions of the government. — /vi/ **5** to thicken through being boiled. *xalli f-furba tiʕḍid fiwayya* let the soup thicken a little. - vn *ʕaḍd, ʕaḍadaan*; ava *ʕaaḍid*; pva *maʕḍuud*.

¶ *ʕaḍad qaraan↑ (yiʕḍid qaraan)* to sign the marriage contract (of the groom). - *ʕaḍad ʕala (yiʕḍid ʕala)* to sign a contract of marriage with (a woman).

عقد *ʕaḍd* /n pl *ʕuḍuud, ʕuḍúda↓*/ **1** contract. **2** *[arch]* arch.

عقدة *ʕaḍda* /n pl *-aat, ʕuḍad*/ **1** sheaf, bundle. *ʕaḍdit ḥaṭab ḍuṭn* a bundle of cotton stalks. **2** *[arch]* arch.

عقد *ʕuḍd* /n pl *ʕuḍuud, ʕiḍaad*/ necklace.

عقدة *ʕuḍda* /n pl *-aat*/ **1** knot (tied in s.th.). ‖*kull[a] ʕuḍda w-liiha ḥallaal [prov]* every problem has someone who can solve it. **2** problem, difficulty. ‖*raagil ʕuḍda* a man who can solve any problem. **3** knot (in wood). ‖ *ʔil-ʕuḍda tixlib in-naggaar [prov]* (the carpenter can't deal with a knot in the wood) there are some problems which no one can solve. - *ḥaṭṭ il-ʕuḍda fil-minfaar [prov]* to object out of contrariness. **4** *[naut]* knot, nautical mile. *surʕaat il-markib bi-titḍaas bil-*

ɛuqda the boat's speeds are measured in knots. **5** knuckle. **6** complex, hang-up.

عقد *ɛiqd* /n/ *[cook]* amount of liquid (usually water with salt) appropriate to a particular dish. *ʃil-ɛiqd' btaaɛ il-firaax kubbayteen mayya l-kull' farxa* the amount of liquid to be added in the cooking of chickens is two cups of water per chicken. - also *qiɛd*.

عقيد *ɛaqiid, ɛaqiid* /n pl *ɛuqadaaʃ/ [mil]* colonel. *ɛaqiid ṭayyaar* group-captain.

عقيدة *ɛaqiida*↑ /n pl *ɛaqaaʃid/* **1** belief, conviction. *ɛan ɛaqiida* by conviction, on principle. **2** creed, dogma.

عقّاد *ɛaqqaad* /n */ maker and seller of trimmings for clothes, maker and seller of piping, braid etc.

عقّاد *ɛuqqaad* /n/ knotted thread worn to ward off illness. ‖ *ʃiddii-ni ɛuqqaad naafiɛ* give me a practical solution.

اتعقد *ʃitɛaqad* /vi/ passive of *ɛaqad*. - iva *mitɛiqid*.

انعقد *ʃinɛaqad* = *ʃitɛaqad*. - vn *ʃinɛiqaad*; iva *minɛiqid*.

عقّد *ɛaqqad* /vt/ **1** to tie in knots, tangle. **2** to make difficult, complicate. *fiḍil yiɛaqqad fi-ḥayat-na l-ḥadd' ma kull' waaḥid marart-u ṭaqqit* he went on making our life difficult till everyone was at the end of his tether. *mawḍuuɛ miɛaqqad* a complex subject. **3** to give a complex to. - vn *taɛqiid*; ava/pva *miɛaqqad*.

اتعقّد *ʃitɛaqqad* /vi/ **1** to be or become tied in knots or tangled. **2** to be made or become difficult or complicated. **3** to be given a complex, develop a complex. *ʃana kunt' mitɛaqqada min il-qaṣr ɛafaan il-ɛayyil nizil mayyit* I had a complex about Kasr el-Aini (hospital) because the child was born dead. - ava/iva *mitɛaqqad*.

اتعاقد *ʃitɛaaqid* /vi/ to make a contract (with o.a.). *titɛaaqid il-wikalaat maɛa t-tilivizyoon* the agencies enter into a contract with the television (corporation). - vn *taɛaaqud*; ava *mitɛaaqid*.

تعاقد *taɛaaqud, taɛaaqud*↑ /n pl *-aat/* contract. *fii taɛaaqud been if-firka wir-raakib* a contract exists between the company and the passenger.

اعتقد *ʃiɛtaqad* /vi/ **1** to believe, have faith (e.g., in God). *ma-b-aɛtiqid-ʃ' f-rabb-i-na* I don't believe in God. **2** to believe (in the truth of a statement). *ma-b-aɛtiqid-ʃ' fil-ḥikaaya di* I don't believe that story. **3** *yaɛtaqid*↑ /imperf only/ to believe, think, consider. *m-aɛtaqid-ʃ* I don't think so. *bi-naɛtaqid ʃinn' fii ḥall* we believe there is a solution. - vn *ʃiɛtiqaad, ʃiɛtiqaad*; ava *miɛtiqid*.

اعتقاد *ʃiɛtiqaad, ʃiɛtiqaad* /n pl *-aat, -aat/* belief.

استعقد *ʃistaɛqad*↓ /vi/ to believe. *kunt astaɛqad fis-siḥr* I used to believe in magic. - also *ʃistaqɛad*. - ava *mistaɛqad*.

1 ع ق ر

عقار *ɛiqaar* or *ɛaqaar* /n pl *-aat/* real estate, landed property.

عقارى *ɛiqaari* or *ɛaqaari* /adj/ pertaining to real estate or landed property. ‖ *ʃil-bank il-ɛiqaari* a bank that provides loans to those building houses. - *ʃif-fahr il-ɛaqaari* see *fahr*.

2 ع ق ر

عقر *ɛaqar (u)* /vt/ to bite (of a dog). - vn *ɛaqr*; ava *ɛaaqir*; pva *maɛquur*.

عقرة *ɛaqra* /inst n, pl *-aat/* a (dog's) bite.

اتعقر *ʃitɛaqar* /vi/ to be bitten. - iva *mitɛiqir*.

انعقر *ʃinɛaqar* = *ʃitɛaqar*. - iva *minɛiqir*.

3 ع ق ر

عقّر *ɛaqqar* /vt/ to foul, entangle. *ʃil-muxṭaaf miɛaqqar* the anchor is fouled. - ava/pva *miɛaqqar*.

اتعقّر *ʃitɛaqqar* /vi/ to be fouled, be entangled. - iva *mitɛaqqar*.

4 (ع ق ر)

عقر *ɛuqr* **1** /coll n/ *[rur]* root(s). **2** /adj invar/ experienced in the ways of the world, hardened and capable.

عقار *ɛaqqaar* /n pl *ɛaqaqiir/* drugs, medicines. ‖ *ɛaqqaar il-halwasa* L.S.D.

ع ق ر ب

عقرب *ɛaqrab'* /vt/ to make difficult, make complex, make baffling. - vn *ɛaqraba*; ava/pva *miɛaqrab*.

معقرب *miɛaqrab* or *miɛaqrab* /adj */ not straightforward, difficult to understand, complex and baffling. *raagil miɛaqrab* a complex man, a deep type. *ʃimtiḥaan miɛaqrab* a difficult exam. *ʃik-koora gat-lu mɛaqraba* the ball came to him at a difficult angle.

عقرب *ɛaqrab*[2] or *ɛaqrab* /n/ **1** /pl *ɛaqaarib/* = *ɛaqraba*. ‖ *ḥagar il-ɛaqrab* an aphrodisiac, supposedly made from an opium base. **2** hand (of a watch). **3** *ʃil-ɛaqrab [astrol]* Scorpio. **4** bolt inserted through the *balanga* of a plough to hold the ploughshare at the required angle (see Pl.D, 15).

عقربة *ɛaqraba* or *ɛaqraba* /n pl *ɛaqaarib/* **1** scorpion. *zayy il-ɛaqraba qarṣit-ha wil-qabr* as fatal as a scorpion with its deadly sting. **2** spiteful backbiting person.

اتعقرب *ʃitɛaqrab* /vi/ passive of *ɛaqrab'*. - iva *mitɛaqrab*.

ع ق ق
عقيق ʕaqiiq /n/ carnelian.

ع ق ل ¹
عقل ʕaqal *(i)* /vt/ **1** to tether. ‖ *ʃiʕqil-ha wa-tawakkal [prov]* (tie up your beast and trust in God) ≈ God helps those who help themselves. **2** to believe, credit, find credible. ‖ *ʃinta ma-b-tiʕqil-ʃ* are you daft? - vn *ʕaql, ʕaqalaan*; ava *ʕaaqil*; pva *maʕquul*.
عقل ʕiqil *(a)* /vi/ to become sensible or reasonable, learn some sense. *lamma tikbar tiʕqal wi-lamma tiggawwiz tiʕqal ʃaktar* when she grows up, she'll learn some sense, and when she gets married she'll learn more. - vn *ʕaql*; ava *ʕaaqil*.
عقل ʕaql /n pl *ʕuquul*/ mind, reasoning power, sense. *ya-bu ʕaql' txiin* you dolt! *gara f-ʕaql-u ʃeeh* what's come over him? *kalaam-ak ʕeen il-ʕaql* what you say is the epitome of good sense. *ʃaṣḥaab il-ʕuquul fi-raaḥa [prov]* the intelligent have no problems. *ʃil-ʕabiiṭ* (or *ʃil-magnuun*) *ma-yiʕgib-uu-ʃ ʏeer ʕaql-u w-law ḥaṭṭuu-lu miit ʕaql[a] ʕala ʕaql-u [prov]* the simpleton (or the madman) prefers his foolishness to the wisdom of a hundred others. ‖ *ya ʕaql-i* ≈ my only care! (a term of endearment). - *ʕaql' ʃiliktirooni* a computer. - *bi-ʕaql* sensibly, in an intelligent way, as in *bi-yaakul bi-ʕaql* he eats sensibly. - *ḥaaga bil-ʕaql* something susceptible to logical explanation, as in *taʕaala fahhim-na - ma hiyya ḥaaga bil-ʕaql* come and explain to me - after all, there must be some logic behind it. - *xad-(u) (ṭaawiʕ-(u)*, etc.) *ʕala (qadd[a]) ʕaql-(u)* to humour, go along with, bear with, as in *qult' m-azaʕʕal-haa-ʃ w-axud-ha ʕala ʕaql-a-ha* I thought, rather than upset her, I'll let her do it her way. - *ʕaql-(u) qal-l(u)* to say to oneself, think, as in *ʕaql-i qal-li quum ya waad ʃiftaḥ-lak ḥittit dukkaan ṣuvayyar* I said to myself, get a move on, lad, and open yourself a small shop, *ʕaql-i qal-li ʃitgawwiz ʕafaan yibqaa-lak beet* I thought, why don't I get married and set up house? - *qaal f-ʕaql' baal-(u)* to say to oneself privately, think to oneself secretly, as in *qult' f-ʕaql' baal-i mif ḥ-argaʕ lid-duktuur da taani* I said to myself, I'm not going back to that doctor! - *ṭiliʕ fi-ʕaql-(u) ʃinn* to be seized by the idea that, be taken all of a sudden by the idea that, as in *ʃabuu ṭaaliʕ fi-ʕaql-u ʃinnu yitgawwiz bint' ṣyayyara baʕd' ma baqa ʃawlaad-u riggaala* his father all of a sudden has become taken with the idea that he should marry a young girl, now that his sons are men. - *ʕamal ʕaql-(u) min* (or *bi-)ʕaql-* to lower oneself to the level of, as in *laakin tiquulı ʃeeh baqa lir-raagil illi ʕaamil ʕaql-u min ʕaql il-waad wi-faaxiṭ fii* but what can one say to the man who lowers himself to the same level as the kid and bawls at him? - *ʕaql-(u) ṭaar* to lose one's head. - *min ʕaql-(u)* on one's own initiative, off one's own bat, as in *ma-tiʕmil-f' ḥaaga min ʕaql-ak* don't do anything on your own initiative! - *huwwa ʕaql-i daftar* ≈ how am I supposed to remember everything! - *ʃakal ʕaql-i* he had me completely fooled. - *ʃil-ʕaql is-saliim fig-gism is-saliim [prov]* a sound mind (is found only) in a sound body. - *ʕaql-u f-raas-u* he is level-headed. - *ʕaql-ak fir-raas-ak tiʕraf xalaaṣ-ak [prov]* ≈ do as you please, but bear the consequences. - *ʃiddii-ni ʕaql-ak* ≈ just imagine! picture it for yourself! - *ʕaql-u gazma* he's a thickhead. - *ʃil-ʕaql il-baaṭin* the subconscious. - *mayyil ʕaql(-u)* to affect the judgement of (s.o.).
عقلي ʕaqli, ʕaqlı /adj/ mental, rational, intellectual. *ʃamraaq ʕaqliyya* mental illnesses. *ʃis-sinn il-ʕaqli* mental age.
¶ *ʕaqliyyan* /adv/ mentally, rationally, intellectually. *mutaxallif ʕaqliyyan* mentally retarded.
عقلية ʕaqlıyya, ʕaqliyya /n pl *-aat*/ mentality.
عاقل ʕaaqil, ʕaaqil /adj * and pl *ʕuqala, ʕuqalaaʃ*/ sensible, reasonable, sane. *ʃis-sitt ıl-ʕaqla hiyya lli tiqdar tidiir fuʃuun bet-ha* it takes a woman with sense to run a household. *xud ıl-magnuuna bint ıl-ʕaqla wala taaxud il-ʕaqla bint il-magnuuna [prov]* better marry the crazy daughter of a sane woman than the sane daughter of a crazy woman. *ʕaduwwun ʕaaqil xayrun mın ṣadiiqin gaahıl [prov]* a sensible enemy is preferable to an ignorant friend.
معقول maʕquul /adj */ reasonable, logical, comprehensible. *kalaam-ak maʕquul* what you say makes sense. *mif maʕquul* incredible! it can't be! it doesn't make sense!
معقولية maʕquliyya /n/ plausibility.

عقلة ʕuqla /n pl *ʕuqaal*/ **1** knuckle. **2** knob, node (e.g., of a reed). ‖ *huwwa zayy il-ʕuqla fiz-zoor* (he's like a lump that sticks in your throat) he's extremely unpleasant. **3a** vertebra. **3b** segment of finger between two knuckles, knuckle-bone. ‖ *quṣayyar zayy il-ʕuqla* short as a knuckle-bone. **4a** segment (of reed or the like) between two nodes. ‖ *liʕbit il-ʕuqla* tipcat. **4b** short flute made of one section of a reed. **5** *[hort]* cutting. *ʕuqlit ward' baladi* a rose cutting. **6** *[gym]* **6a** trapeze. **6b** horizontal bar.

أعقل ʃaʕqal /el/ more/most reasonable.
عقال ʕiqaal, ʕuqaal /n pl *-aat*/ **1** stiff cord ring worn to hold the *kufiyya* in place on the head. **2** foot-rope, hobble.

عقّل ʕaqqal **1** /vt/ to teach sense to, make reasonable. **2** /vi/ to become knotty. - vn *taʕqiil*; ava/pva *miʕaqqal*.
معقّل *miʕaqqal* /adj/ gnarled, knotty.
اتعقّل ʔitʕaqqal /vi/ **1** to be taught sense, be made reasonable. **2** to behave with reason. **3** to become knotty or gnarled. - ava/iva *mitʕaqqal*.
اعتقل ʔiʕtaqal, ʔiʕtaqal /vt/ to arrest and detain for a political offence and without due process of law. - vn *ʔiʕtiqaal*; ava *miʕtiqil*; pva *muqtaqal*.
معتقل *muʕtaqal, muʕtaqal* /n pl *-aat*/ prison camp (especially for political prisoners), concentration camp.

ع ق ل [2]
عاقول، عقول ʕaquul /n/ *[bot]* camel thorn.

ع ق م
عقم ʕuqm /n/ barrenness, sterility.
عقّم ʕaqqam↑ /vi/ to sterilize. - vn *taʕqiim*; pva *muʕaqqam*.
اتعقّم ʔitʕaqqam↑ /vi/ to be sterilized. - iva *mitʕaqqam*.

ع ك ر
عكر ʕikir /adj */ turbid, muddy. *mayya ʕikra* turbid water. ‖*wiff-u ʕikir* he has an unpleasant face.
عكارة ʕukaara, ʕakaara, ʕikaara /n/ dregs, sediment, lees.
عكّر ʕakkar or ʕakkar /vt/ **1** to roil, render turbid. *gaww' mʕakkar* overcast weather. **2** to disturb, trouble. *ʕakkar mazaag-i* (or *damm-i*) he put me in a bad mood. - vn *taʕkiir*; ava/pva *miʕakkar, miʕakkar*.
معكّراتي *miʕakkaraati* /n pl *-yya*/ one who habitually spoils people's happiness, spoilsport, wet blanket.
اتعكّر ʔitʕakkar or ʔitʕakkar /vi/ **1** to be made turbid. *ʔil-baḥr' ma-yitʕakkar-ʃ' min tirʕa [prov]* (the sea is not stirred up by (water from) a canal) a drop in the ocean has no effect. **2** to be disturbed, be agitated. - iva *mitʕakkar*.
استعكر ʔistaʕkar /vt/ **1** to consider (too) turbid. **2** to select for turbidity. - vn *ʔistiʕkaar*; ava *mistaʕkar*.

ع ك ر ت
عكرت ʕakrat /vi/ to rummage, go ransacking. *ʔinta bi-tʕakrat ʕala ʔeeh ʕandak* what are you rummaging in there for? - vn *ʕakrata*; ava *miʕakrat*.
عكروت ʕakruut /n pl *ʕakariit, ʕakarta*/ scoundrel, heel.

ع ك ز
عكّاز ʕukkaaz /n pl *ʕakakiiz*/ **1** crutch. **2** bishop's staff, crosier.

اتعكّز ʔitʕakkiz /vi/ to lean, support oneself. - ava *mitʕakkiz*.

ع ك س
عكس ʕakas' *(i)* /vt/ **1** to reverse, invert. ‖*ʕakas il-ʃaaya* to do the opposite of what should be done. **2** to reflect, produce a reflection of. - vn *ʕakasaan, ʕaks*; ava *ʕaakis*; pva *maʕkuus*.
عكس ʕaks /n/ **1** opposite, reverse. *ʔis-sammaaʕa ʕaks il-mikrufoon* the receiver is the opposite of the microphone. ‖*bil-ʕaks* on the contrary. - *maafi fid-dinya bil-ʕaks* ≈ flouting convention. - *ʔil-ʕaks' bil-ʕaks* vice versa. **2** /pl *ʕukusaat*/ adversity, reverse in fortune thought to be occasioned by malevolent spirits or magic. *ʔallaah yimnaʕ ʕannu l-ʕaks* God keep adversity from him! *fuft' ʈariiq-u fil-fingaan kaan kull-u ʕaks* I saw his future in the cup, and it was nothing but adversity.
عكسي ʕaksi /adj */ **1** opposite, contrary. *ʔil-ittigaah il-ʕaksi* the opposite direction. *liʕba ʕaksiyya* a play against the direction of the game, a side or back pass. **2** inverse. *tanaasub ʕaksi* inverse proportion.
عكس ʕakas[2] /n/ = *ʕaks* 2.
اتعكس ʔitʕakas /vi/ **1** to be reflected. **2** to be reversed. - iva *mitʕikis*.
انعكس ʔinʕakas = ʔitʕakas. - vn *ʔinʕikaas*; iva *minʕikis*.
عاكس ʕaakis /vt/ **1** to bother, hassle, pester, annoy. *ʕeeb ʔinnak tiʕaakis il-banaat fif-faariʕ* it's shameful of you to bother girls in the street. **2** to thwart, oppose. *ḍurrit-ha dayman miʕaksaa-ha* her co-wife is always standing in her way. — /vi/ **3** to act contrarily, play up. *ʔil-ʔasanseer ʕammaal bi-yʕaakis* the lift keeps playing up. *ʔiz-zaman miʕaakis* everything goes wrong these days! - vn *miʕaksa, muʕaksa*; ava *miʕaakis*.
اتعاكس ʔitʕaakis /vi/ **1** to be bothered, be hassled, be pestered, be annoyed. **2** to be thwarted, be opposed. - iva *mitʕaakis*.

ع ك ش
عكش ʕakaʃ *(u)* /vt/ to grab, take hold of. *ʕakaʃt-u min ʔiid-u* I grabbed him by the hand. - vn *ʕakaʃaan, ʕakʃ*; ava *ʕaakiʃ*; pva *maʕkuuʃ*.
عكس ʕukʃ **1** /coll n/ joints (of an animal), knobs or nodes (of a plant). **2** /adj invar/ stunted, undersized. *baṭṭiixa ʕukʃ* a stunted water-melon.
عكسة ʕukʃa /unit n, pl *-aat*/ a joint (of an animal), knob or node (of a plant).
اتعكس ʔitʕakaʃ /vi/ to be grabbed. - iva *mitʕikiʃ*.

انعكس ʔinɛakaf = ʔitɛakaf. - iva minɛikif.
عكّش ɛakkaf /vt/ to grab (a number of things or a number of times). ʔil-buliiṣ ɛakkaf-hum kull-u-hum the police nabbed them all. - vn tąɛkiif; ava/pva miɛakkaf.
اتعكّش ʔitɛakkaf /vi/ passive of ɛakkaf. - iva mitɛakkaf.

ع ك ف
عكف ɛakaf (i) /vi/ to devote one's attention. ɛakafta ɛal-qaḍiyya darast-a-ha I concentrated on the case (until) I had studied it thoroughly. - vn ɛakafaan; ava ɛaakif.
اعتكف ʔiɛtakaf /vi/ to retire, seclude oneself, go into seclusion. - vn ʔiɛtikaaf; ava miɛtikif.

ع ك ك [1]
عكّ ɛakk (u) /vt/ 1 to smear. ɛukk' ʔiid-ak bi-ʃwayyit sabɤit yuud put a little tincture of iodine on your hand. ʔiwɛa tɛukk' hduum-ak buuya mind you don't get paint all over your clothes. 2 to mess up, botch up. ɛakkit il-ʔakl she made a mess of the food. ʔeeh il-ɛakk' da what's all this mess! 3 to embroil in a mess, set at odds. ɛakk in-naas fi-baɛḍ-a-ha he set the people against one another. - vn ɛakakaan, ɛakk; ava ɛaakik; pva maɛkuuk.
عكّة ɛakka /pl -aat/ instance noun of ɛakk.
عكّاك ɛakkaak /n */ 1 botcher, one who makes a mess of what he does. 2 malicious trouble-maker.
اتعكّ ʔitɛakk /vi/ 1 to be smeared. 2 to be messed up, be botched. 3 to be embroiled in a mess, be set at odds. - iva mitɛakk.
انعكّ ʔinɛakk = ʔitɛakk. - iva minɛakk.

ع ك ك [2]
عكّا، عكاء ɛakka /prop n/ Acre, a town on the Mediterranean coast north of Haifa. ‖ɛamal zayy' ma ykuun fataḥ ɛakka (he behaved as though he'd conquered Acre) he behaved as though he'd achieved the impossible.

ع ك م
عكم ɛakam (u) /vt/ to grab and hold tight, grasp, ʔis-sitt' waldit-i raaḥit ɛakmaa-ni w-baysaa-ni my mother suddenly hugged and kissed me. - vn ɛakm, ɛakamaan; ava ɛaakim; pva maɛkuum.
اتعكم ʔitɛakam /vi/ to be grabbed and held tight, be grasped. - iva mitɛikim.
عكّم ɛakkim /vt/ to cause or enable to grab. - vn taɛkiim; ava/pva miɛakkam.
اتعكّم ʔitɛakkim /vi/ passive of ɛakkim. - iva mitɛakkim.

ع ك ن
عكنن ɛaknin /vt/ to annoy, upset, aggravate, exasperate. ʔamma di ɛaknana how exasperating! ɛakninu mazaag-i they ruined my good humour. - vn ɛaknana; ava/pva miɛaknin.
معكنناتي miɛakninaati /n pl -yya/ one who habitually annoys people, pest.
اتعكنن ʔitɛaknin /vi/ to be or become annoyed, upset, aggravated or exasperated. - ava/iva mitɛaknin.

ع ك و
عكوة ɛikwa /n pl -aat/ cut of meat from the base of the tail.

ع ل ب
علبة ɛilba /n pl ɛilab/ container, box, pack, tin. ɛilbit sagaayir pack of cigarettes. ɛilbit sardiin tin of sardines. ɛilbit gazma shoe-box. ‖ɛilbit saqya [agric] hollow inner compartment of a water-wheel. - ɛilbit id-diriksiyoon [auto] steering column.
علّب ɛallib /vt/ to pack in a container. - vn taɛliib; ava/pva miɛallib.
معلّبات muɛallabaat↑ /pl n/ canned foods.
معلّباتي miɛallabaati /n pl -yya/ packer.
اتعلّب ʔitɛallib /vi/ to be packed in a container. - iva mitɛallib.

ع ل ج
عالج ɛaalig /vt/ 1 to treat medically. ruḥt il-ɛiyaada taani w-ɛalguu-ni hnaak I went back to the clinic and they treated me there. ʔiṭ-ṭabiib il-muɛaalig the doctor in charge of the case. 2 to tackle, deal with, treat. ɛaalig il-mawḍuuɛ bi-ḥikma go about the matter wisely. 3 to process. bi-yɛalgu l-ɢumaaf bi-mawaadd' kimawiyya they process the cloth with chemicals. - vn ɛilaag, muɛalga; ava miɛaalig, muɛaalig↑.
علاج ɛilaag /n pl -aat/ prescribed treatment. ʔiddaa-ni ɛilaag ɤaali ɢawi he prescribed me very expensive medicine. ‖ɛilaag gamaaɛi group therapy. - ɛilaag ṭabiiɛi physiotherapy. - ma-luu-ʃ ɛilaag (1) it is incurable. (2) it is irremediable.
علاجي ɛilaagi /adj/ therapeutic. ‖muʔassasa ɛilagiyya hospital run by a trade union or professional association for the benefit of its members.
معالجة muɛalga /n pl -aat/ = ɛilaag.
اتعالج ʔitɛaalig /vi/ 1 to be treated medically. b-atɛaalig bi-ʔibar wi-birfaam I'm being treated with injections and pills. 2 to be tackled, be dealt with, be treated. 3 to be processed. - iva mitɛaalig.

ع ل ش ا ن see ع ش ا ن : *ɛalaʃaan*

ع ل ف

علف *ɛalaf, ɛilif (i)* /vt/ to feed (an animal). *nifiil tibn il-ɣalla ɛaʃaan niɛlif minnu l-bahaayim* we take the wheat stalks to feed to the livestock. - vn *ɛalf, ɛalafaan*; ava *ɛaalif*; pva *maɛluuf*.

علفة *ɛalfa* /n pl *-aat*/ **1** instance noun of *ɛalf*. **2** (kind of) fodder.

معلوف *maɛluuf* /adj */ fattened for market (e.g., of a calf).

علف *ɛalaf* /n pl *ʃaɛlaaf*/ fodder. ‖ *ɦalaawa ɛalaf* sweetmeat made of sesame seeds and sugar.

علافة *ɛalaafa* /n/ food grains.

علّاف *ɛallaaf* /n * and pl *ɛallaafa*/ **1** seller of fodder, cereals, pulses etc. **2** one skilled at feeding livestock.

اتعلف *ʃitɛalaf* /vi/ to be fed (of animals). - iva *mitɛilif*.

انعلف *ʃinɛalaf* = *ʃitɛalaf*. - iva *minɛilif*.

ع ل ق

علق *ɛiliq (a)* /vi/ to stick, adhere. *ʃif-faɛr il-maqṣuuṣ ɛiliq fi-hduum-i* the shorn hair stuck to my clothes. - vn *ɛalaqaan*; ava *ɛaaliq*.

علقة *ɛalqa* /n pl *-aat, ɛulaq*/ beating, hiding. *ḍarabt-a-ha ɛalqa gamda* I gave her a good thrashing.

علق *ɛilq* /n pl *ɛiluuq*/ *[coarse]* passive homosexual, faggot. *ʃin laqeet il-ɛilqi ma-tilqaa-ʃ il-xaraaba w-ʃin laqeet il-xaraaba ma-tilqaa-ʃ il-ɛilq [prov]* if you find the faggot, you can't find the wasteground (to screw him in), and if you find the wasteground, you can't find the faggot. see further under ع ل ق ن

علقة *ɛilqa* /n pl *ɛiluuq*/ *[coarse]* girl of loose conduct, tart.

علق *ɛalaq* /coll n/ leech(es).

علقة *ɛalaqa* /unit n, pl *-aat*/ a leech. ‖ *zayy il-ɛalaqa* (like a leech) parasitical, clinging.

علاقة *ɛilaaqa, ɛilaaqa* /n pl *-aat*/ relation, relationship. *ɛilaqaat faxṣiyya* personal relations. *ɛilaqaat ɛamma* public relations. *fii ɛilaaqa been taʃxiir il-ʃisɛaaf wiz-zibaala lli marmiyya fif-faariɛ* there's a connection between the ambulance being delayed and the rubbish thrown down in the street.

علوقيّة *ɛiluqiyya, ɛuluqiyya* /n/ debauchery. see further under ع و ل ق

عليق *ɛaliiq* /coll n/ fodder, animal feed. *muut ya ɦmaar ɛala ma ygii-lak il-ɛaliiq [prov]* you'll die (of starvation), you ass, if you wait expecting someone to bring you food (to one whose problem has little hope of solution).

عليقة *ɛaliiqa* /unit n, pl *-aat, ɛalaayiq*/ a portion of fodder.

علّاقة *ɛallaaqa* /n pl *-aat*/ **1** clothes rail (in a wardrobe). **2** peg or hook on which to hang things up. **3** sling (for the arm).

علّيق *ɛulleeq* /coll n/ any of various climbing or creeping plants or brambles. *l-agl il-ward[i] yinsiqi il-ɛulleeq [prov]* for the sake of the roses the weeds get watered.

علّيقة *ɛulleeqa* /n pl *-aat*/ **1** hanging strap (e.g., in a bus). **2** peg or rack on which to hang things. **3** sling (for the arm). **4** any hanging decoration (e.g., pendant on a necklace, mascot in a car). — /unit n/ **5** a climbing or creeping plant or bramble. ‖ *ʃil-ɛulleeqa* or *ɛulleeqit muusa* the Burning Bush.

معلقة *maɛlaqa* /n pl *maɛaaliq*/ **1** spoon. **2** spoonful.

علّق *ɛallaq* /vt/ **1a** to hang, suspend. *yiqlaɛ huduum-u wi-yɛallaq-ha ɛaʃ-ʃammaaɛa* he takes off his clothes and hangs them on the hanger. *ɦa-nɛallaq in-natiiga bukra* we'll put up the result tomorrow. ‖ *kubri mɛallaq* suspension bridge. **1b** to stand up, leave to wait in vain. *farqaɛit il-maɛaad wi-ɛallaqit-ni saɛteen* she broke the appointment and left me waiting two hours. **1c** *[chem]* to suspend (a substance) in a fluid. **2** to harness, hitch. *ʃil-faras lamma tikbar bi-yɛallaq-ha fil-ɛarabiyya* when a mare grows old she is put to pulling a cart. *ʃin kaan ɛandu bhimteen yiɛallaq-hum fil-miɦraat* if he has two beasts he harnesses them to the plough. **3** to pick up (a girl). *nifs-i ʃabqa zayyu w-ʃaɛallaq ʃayyuha waɦda* I wish I were like him and could pick up any girl. **4** to get hold of illicitly, nick, swipe. *ɛallaqu ʃasʃilit il-imtiɦaan* they got hold of the exam questions (ahead of time). *ʃil-xaddaam ɛallaq ir-radyu w-mifi* the servant swiped the radio and left. — /vi/ **5** to comment, make comments. **6a** to jam, become stuck. *ʃaduus ɛad-dibriyaaj ɛafaan it-tiruus ma-tɦukk[i]-ʃ fi-baɛḍ-a-ha wi-tɛallaq* I press on the clutch so that the gears don't catch on one another and get stuck. *ʃil-ʃibra mɛallaqa* the (record-player) needle is stuck. ‖ *ʃin-nimra mɛallaqa* the number doesn't connect (when dialled). *-ɛallaqt[a] ɛala l-fikra w-miʃ qaadir ʃansaa-ha* I'm completely hooked on the idea and can't forget it. **6b** to catch on, become popular. *bi-yziiɛu l-ʃuɣniya lamma tɛallaq* they broadcast the song till it catches on. - vn *taɛliiq*; ava/pva *miɛallaq*.

¶ *ɛallaq ɛala* to put (s.th.) on to cook. *ɛallaq ɛala l-laɦma* put the meat to cook. *-ɛallaq li-* to feed (livestock).

تعليق *taɛliiq* /n pl *-aat, taɛaliiq*/ **1** comment. **2** commentary. *ʃit-taɛliiq ɛal-matʃ* the commentary on the match.

تعليقة *taɛlīiqa* /n pl *-aat*/ **1** hanging strap. **2** hanging flap (e.g., of a tent or awning). **3a** badge worn as an emblem. **3b** pendant. **3c** amulet worn on the person. **4** sling (for the arm). **5** hook or rack used to hang things on.

معلّق *muɛalliq, muɛalliq* /n */ commentator.

معلّق *muɛallaq* /n pl *-aat/ [chem]* suspension, fluid in which a substance is suspended.

اتعلّق *ʔitɛallaq* /vi/ **1a** to be hung, be suspended. **1b** to be stood up, be left waiting in vain. **1c** *[chem]* to be suspended in a fluid. **2** to be harnessed, be hitched up. **3** to be picked up (of a girl). **4** to be got hold of illicitly, be nicked, be swiped. **5** to be connected, *ʔin-nafaaṭ illi b-yitɛallaq bif-ʃabaab* activities pertaining to youth. **6** to become emotionally attached (to s.o.), become emotionally dependent (on s.o.). *mif laaqi ɛaruusa tirḍa bii ɛalaʃaan mitɛallaq xaaliṣ bi-ʔumm-u* he can't find a girl prepared to marry him because he's so attached to his mother. ‖*mitɛallaq min deel-u* ≈ he's trying to keep up with the Joneses. **7** (impersonal) passive of *ɛallaq* 5. *ʔil-ḥagaat iṣ-ṣuxayyara di mif laazim yitɛallaq ɛaleeha* it's not necessary to pick on these trivial matters. ◦ ava/iva *mitɛallaq*.

متعلّقات *mutaɛallaqaat, mutaɛallaqaat* /pl n/ belongings, possessions.

ع ل ق م

علقم *ɛalqam* /n/ colocynth, bitter-apple. *murr' zayy il-ɛalqam* as bitter as colocynth.

ع ل ق ن see also ع ل ق

اتعلقن *ʔitɛalqan* /vi/ to behave effeminately. - vn *ɛalqana*; ava *mitɛalqan*.

ع ل ك

علك *ɛalak (i)* /vi/ to chatter, prattle, babble on. - vn *ɛalk*; ava *ɛaalik*.

ع ل ل [1]

علّ *ɛall (i)* /vt/ **1** to make sick and weary. *ʔit-tadriis fuṛlaana tɛill* teaching is a soul-destroying job. **2** to water for a second time (plants which do not flourish after the first watering). - vn *ɛalalaan*; ava *ɛaalil*; pva *maɛluul*.

علّة *ɛilla* /n pl *ɛilal/* **1** sickness, weariness. *ʔil-ḥikaaya di rabbit-li ɛilla* I'm sick and tired of this business. **2** reason, excuse. *ʔeeh il-ɛilla f-safar-ak bil-leel* what is the reason for your travelling at night? *kalaam-u da mugarrad ɛilla kida* what he said is just an excuse.

علاله *ɛilaala* /n/ **1** comfort, consolation. **2** remainder, remnant, rest. **3** excuse, pretext. **4** occupation, diversion.

عليل *ɛalīil* /adj pl *ɛulala/* extremely sick.

اتعل *ʔitɛall* /vi/ to become sick and tired. *fiḍilt aftaval fit-turmaay taman siniin li-ḥadd' ma tɛalleet* I went on working on the trams for eight years, till I was worn out. - ava *mitɛall*.

انعلّ *ʔinɛall* = *ʔitɛall*. - ava *minɛall*.

علّل *ɛallil* /vt/ to account for, give a reason for. *ʔil-baaḥis laazim yiɛallil wigḥit naẓar-u* the researcher must justify his opinion. - vn *taɛliil*; ava/pva *miɛallil*.

اتعلّل *ʔitɛallil* /vi/ to make excuses. *ʔaẓunn' ma-ɛad-ʃ' fi dilwaqti ḥaaga titɛallil biiha* now I think there is nothing more for you to use as a pretext. - ava *mitɛallil*.

ع ل ل [2]

علّ *ɛalla* (also *laɛalla*) /adv/ perhaps. *niqul-lu - ɛalla wa-ɛasa yismaɛ kalam-na* we'll tell him, perhaps he'll listen to us.

ع ل ل [3] see ع ل ى : *ɛalaali*

ع ل ل ا ن

علّان *ɛillaan* /n/ assonant complement to *filaan* (q.v.). *nigiib fi-siirit filaan w-niqaṭṭaɛ fi-farwit ɛillaan* we gossip about so-and-so and slander so-and-so.

علّانة *ɛillaana* /n/ feminine of *ɛillaan*.

ع ل م

علم *ɛilim (a)* /vt/ **1** to know (of God). *yiɛlam allaah ʔinni b-aḥibb-ak* God knows I love you. ‖*yiɛlam bii (biiha*, etc.) *rabb-i-na* bad to a degree that only God can comprehend, awful, disastrous, as in *y-aadi l-yoom illi yiɛlam bii rabb-i-na* what an awful day! *ʔig-gawaaza ṭiɛit muṣiiba yiɛlam biiha rabb-i-na* the marriage turned out to be an utter disaster. **2** to know. *m-aɛlam-ʃ' ḥaaga ɛan il-mawḍuuɛ* I know nothing about the matter. ‖*da ḥilm' walla ɛilm* is that mere wishful thinking or hard fact? - vn *ɛilm*; ava *ɛaalim*; pva *maɛluum*.

علم *ɛilm* /n/ **1** knowledge, information. *ʔil-ɛilm' nuur* knowledge is light (a common cliché). ‖*ɛilm-i ɛilm-ak* I know as little as you, I've no idea. - *ʔil-ɛilm[a] ɛand allaah* God alone knows, I've no idea. - *maɛa l-ɛilm' ʔinn...* despite the fact that .... - *lil-ɛilm* or *min baab il-ɛilm* for information, as in *baɛatu ṣuurit il-muzakkira lil-qism lil-ɛilm* they sent a copy of the memo to the department for information. - *yikuun fi-ɛilm-ak* please be informed, take note, bear in mind, as in *yikuun*

fi-ɛilm-ak ʃiza ma-get-ʃ' ḥa-titrifid take note that if you don't come, you'll be fired. — /pl *ɛuluum*/ **2** natural or physical science. *ɛuluum wi-ʃadaab* sciences and arts. *ɛilm in-nafs* psychology. **3** academic discipline, subject. *fis-sana l-ʃuula b-yidrisu magmuuɛit ɛuluum muxtalifa* in the first year they study a number of different subjects. *ɛilm il-luɣawiyyaat* the science of linguistics. — /no pl/ **4** note, memorandum. ‖*gawaab bi-ɛilm il-wuṣuul* a recorded delivery letter.

علمى *ɛilmi* /adj */ **1** scientific. *fii qism' ɛilmi wi-qism' ʃadabi* there is a science department and an arts department. **2** academic, scholarly.

¶ *ɛilmiyyan* /adv/ (1) scientifically. *ɛilmiyyan kull illi bi-ybiɛuu l-ɛaṭṭariin kalaam faariɣ* scientifically speaking, everything the herbalists sell is a lot of nonsense. (2) academically. *ɛilmiyyan ʃana ʃaḥsan min ʃaxuu-ya* I'm better academically than my brother.

علمانى *ɛilmaani* **1** /adj */ secular. **2** /n */ *[Chr]* layman.

عالم *ɛaalim* /n/ **1** Knower (epithet of God). — /pl *ɛulama*/ **2** one trained in Islamic law and theology. *yixlaq min ḍahr il-ɛaalim faasid [prov]* ≈ God may give a good man a bad son. **3** scholar. **4** scientist.

عالمة *ɛalma* /n pl *ɛawaalim*/ woman leader of a troupe of women musicians and dancers. ‖*ḥazz il-ɛawaalim* ≈ the luck of the devil.

معلوم *maɛluum* /n/ **1** knowledge, known fact. ‖*maɛluum ʃinn* ... it is common knowledge that ..., it is known that ..., as in *maɛluum ʃinn' ma-ḥadd'-ʃ yilaaqi faqqa b-suhuula* we all know that no one can find a flat easily. *-yikuun fi-maɛluum-ak* please be informed, take note, bear in mind. **2** *ʃil-maɛluum* the sum customarily given (e.g., to a beggar or as the monthly tip for a dustman or the like). — /interj/ **3** of course! obviously!

معلومة *maɛluuma* **1** /n pl *-aat*/ item of information. **2** *maɛlumaat* /pl n/ information. ‖*maɛlumaat ɛamma* general knowledge.

معلوميّة *maɛlumiyya* /n/ **1** skill, practical ability. *ṣaaḥib maɛlumiyya* a skilled person. **2** sum customarily given as a fee.

علمان *ɛalmaan* /adj */ aware, informed, cognizant.

علم *ɛalam* /n pl *ʃaɛlaam*/ flag.

أعلام *ʃaɛlaam* /pl n/ notables, people of high social standing.

علامة *ɛalaama* /n pl *-aat*/ **1** mark, affixed sign or inscription. *ɛalaamit il-xitm* the mark made by the stamp. *ɛalamaat it-tarqiim* punctuation marks. ‖*diqiiq ɛalaama* highest quality flour. **2** marker, signpost. *ɛalamaat muruur* traffic signals. ‖*ma-ʃaf-ʃ il-ɛalamaat* he failed the eye test. **3** indication, sign, symptom. *ɛalaamit il-wilaada b-tibqa nzuul damm' ʃaw mayya* the sign that birth is near is the discharge of blood or fluid.

عليم *ɛaliim* /n/ Omniscient One (epithet of God).

أعلم *ʃaɛlam'* /el/ more/most knowledgeable. ‖*ʃallaahu ʃaɛlam* (1) God knows best. (2) only God knows, I've no idea, as in *da nẓaam ʃallaahu ʃaɛlam maṣdar-u ʃeeh* God alone knows how the system started!

علاّم *ɛallaam* /n/ Omniscient One (epithet of God). *ɛallaam il-ɣiyuub* Knower of the unknown (epithet of God).

علّيمة *ɛulleema* /n/ something newly heard or learnt (especially when of only transient value), fad, craze. *hiyya di ɛulleema gdiida* (do you think) this is the latest thing out? *ʃitɛallimt-i-lak ɛulleema* you've got a new hobby-horse. *ɛirift-i-lak ɛulleema* I've heard something new that may help you.

معالم *maɛaalim* /pl n/ features. *maɛaalim il-wiff* the features of the face. *maɛaalim il-balad itɣayyarit xaaliṣ* the town has changed completely in appearance.

عالم *ɛaalam* /n/ **1** /pl *ɛawaalim*/ world. *buṭuulit il-ɛaalam* world championship. *ɛaalam il-fann* the world of art. **2** /fem n, no pl/ people in general. *ʃil-ɛaalam di kull-a-ha* all these people. *kaan fii ɛaalam kitiir* there were masses of people. *ʃismaɛu ya ɛaalam* listen everybody!

¶ *ɛaalamiin: rabb il-ɛaalamiin* the Lord of the universe.

عالمى *ɛaalami* /adj */ **1** world-wide. *maʃaakil ɛaalamiyya* world problems. *ʃil-ḥarb il-ɛaalamiyya t-tanya* the Second World War. **2** of international standing, known world-wide. *muhandis ɛaalami* an engineer of international standing.

علّم *ɛallim* /vt/ **1** to teach, train. *ɛallim-ni furb il-xamra* he taught me to drink wine. ‖*ɛallimnaa ʃif-fiḥaata sabaq-na ɛal-ʃabwaab [prov]* (we taught him to beg and he beat us to the doors) ≈ he bites the hand that fed him. **2** to mark. *bi-nɛallim il-xaʃab ɛaʃaan in-naqr* we mark the wood for the mortising. *ʃik-karabiig ɛallimit fi-gism-i* the whips left marks all over my body. *-vn taɛliim, ɛalaam*; ava/pva *miɛallim*.

تعليم *taɛliim* /n/ education. *wizaarit it-tarbiya wit-taɛliim* the Ministry of Education.

تعليمات *taɛlimaat* /pl n/ instructions, directives.

تعاليم *taɛaliim'* /pl n/ teachings, doctrines. *taɛaliim il-masiiḥ* the teachings of Christ.

تعليمى *taɛliimi* /adj/ educational. *ʃisṭuwaana taɛlimiyya* an educational gramophone record.

تعليمجى *taɛlimgi* /n pl *-yya*/ *[mil]* drill instructor.

تعليمخانة *taɛlimxaana* /n pl *-aat*/ *[obsol]* riding school.

معلّم *miʕallim* /n */ **1** title of, and form of address or reference to, a man in traditional society who owns a small business, directs the labour of others, or holds a similar position of authority (e.g., a foreman, shop-keeper, or gang leader) ≈ boss. *ʕana ʃavvaal tabaʕ il-miʕallim* I work under the boss. ‖*xabṭit miʕallim* a master-stroke. **2** polite form of address to a lower-class man.

معلّم *muʕallim* /n */ **1** (male) teacher. *yimuut il-muʕallim wi-huwwa yitʕallim [prov]* even a teacher still has things to learn after living a whole lifetime. *daar muʕallimiin* teacher training college. *baʃʃawiif muʕallim* drill sergeant-major. **2** *[Chr]* leader of congregational prayer responses and hymns, cantor (in the Coptic church).

معلّمة *miʕallima* /n pl *-aat*/ **1** female equivalent of *miʕallim* 1. **2** manly woman, woman of forceful character.

معلّمة *muʕallima* /n pl *-aat*/ (female) teacher.

اتعلّم *ʃitʕallim* /vt/ **1** to be taught, learn. **2** to be marked. - ava/iva *mitʕallim*.

متعلّم *mutaʕallim, mitʕallim*↓ /adj */ (well-)educated.

أعلم *ʔaʕlam*[2] /vt/ to inform. *ʔaʕlamuu-na (bi-)l-mawḍuuʕ* they informed us of the matter. - vn *ʃiʕlaam*; ava *muʕlim*; pva *muʕlam*.

إعلام *ʃiʕlaam* /n/ publicity. *wasaa ʃil ʃiʕlaam* mass media. *ʃiʕlaam farʕi [leg]* a court statement of the legal heirs to a person's estate.

إعلامي *ʃiʕlaami* /adj */ pertaining to publicity. *mulḥaq ʃiʕlaami* publicity officer.

استعلم *ʃistaʕlam* /vi/ to inquire. - vn *ʃistiʕlaam*; iva *mistaʕlim*.

استعلامات *ʃistiʕlamaat* /pl n/ inquiries. *(maktab) il-istiʕlamaat* information desk.

ع ل ن [1]

علن *ʕalan*↓ = *ʔaʕlan*.

علنا *ʕalanan* /adv/ publicly, openly.

علني *ʕalani* **1** /adj, often invar/ public, open, overt. *ʃiʕdaam ʕalani* public execution. *di sirʔa ʕalani* this is daylight robbery! *ʕala l-ʕalani* publicly, openly. **2** /adv/ openly, overtly. *bi-yvʃʃ*[a] *ʕalani* he cheats openly.

أعلن *ʔaʕlan* /vt/ **1** to announce, declare. *ʃil-mufti b-yiʕlin ir-ruʃya* the mufti announces the sighting (of the new moon). *ʃil-ḥukuuma ʔaʕlanit ittiḥaad gidiid* the government announced a new union. *ʔaʕlanu l-ḥarb* they declared war. **2** to inform. *ʃil-ḥaaḍir yiʕlin il-vaayib* he who is present should inform the absentee. **3** to display. *ʔaʕlan zaʕal-u* he showed his annoyance. - vn *ʃiʕlaan*; ava *muʕlin*; pva *muʕlan*.

¶ *ʔaʕlan ʕan* (1) to give formal notice of. *ʔaʕlanu ʕan ig-galsa g-gayya* they gave notice of the forthcoming session. (2) to advertise. *bi-yiʕlinu fig-garaayid ʕan ʔaṣnaaf sagaayir ma-lhaa-ʃ wuguud fis-suuq* they advertise in the papers types of cigarettes that are not to be found in the market.

إعلان *ʃiʕlaan* /n pl *-aat*/ **1** advertisement. **2** *[leg, comm]* notification.

معلن *muʕlin* /n */ advertiser.

ع ل ن [2] see ع ل ل ا ن: *ʕillaan, ʕillaana*

ع ل و see ع ل ى: *ʕuluww, ʕiliww, ʕulwi, ʕilw, ʕilwi, ʕilaawa, ʕalaawa, ʕilleewi*

ع ل و ل ا

علاوة *ʕalawla* /adv/ **1** completely, altogether. *xallaṣuu-ha ʕalawla* they finished it off completely. **2** continually. *ʃil-walad bi-yitbawwaʕ ʕalawla* the child keeps vomiting.

ع ل و ن see ع ن و ن: *ʕilwaan*

ع ل ى see also ع ا ل

على *ʕili (a)* /vi/ **1a** to become high(er), increase in height. *kull' yoom il-ʕimaara ʕammaala tiʕla* every day the building keeps getting higher. *ʃil-babuur bi-yiʕla* the stove(-flame) burns higher. **1b** to become high(er) off the ground. *ʃiṭ-ṭayyaara ʕilyit* the plane flew higher. ‖ *ʃilli ʕili ʕili [prov]* ≈ one who has gone to the top is out of reach (of his friends). - *ʕili walla wiṭi* whatever his standing, whatever people say about him. **2** to improve in quality. *mustawa l-maʕiifa laazim yiʕla* the standard of living has to rise. ‖ *beet in-nattaaf ma-yiʕlaa-ʃ [prov]* ≈ thieves never prosper. **3** to increase statistically or quantitatively. *ʕadad is-sukkaan bi-yiʕla* the population increases. *murattab-i ʕili* my salary went up. **4** to increase in volume, become loud(er). *ṣoot-u ʕili w-huwwa b-yitxaaniq* his voice rose while he was quarrelling. **5** to become rough (of the sea). *ʃil-moog ʕili* the waves got rougher. - vn *ʕilw, ʕiliww, ʕuluww*; ava *ʕaali*.

¶ *ʃiʕla* /fem *ʃiʕli*, pl *ʃiʕlu*/ *[joc slang]* hand over! give! *ʃiʕla b-sigaara* give me a cigarette!

علوّ *ʕiliww, ʕuluww* /n/ height, elevation. *ʕiliww-a-ha ʔaktar min miyya w-sabʕiin santimitr* it is more than 170 cm. high. *baʕd' ma yṭuul zarʕ it-tiil ʕiliww' mitreen* after the flax plants reach two metres in height. *zawya ʕuluww* angle of elevation. ‖ *bi-ʕliww*[a] *ḥiss-i* at the top of my voice.

عالى ʕaali /adj */ **1a** tall, high. *ʕimaara ʕalya* a tall building. *ṭaaliʕ fil-ʕaali* (1) being pretentious. (2) going upstream (in the jargon of Nile boatmen). ‖ *ʔil-muus fii ʕaali w-waaṭi* the razor blade is dented. *-gaab ʕalii-ha waṭii-ha* he turned everything upside-down, he upset things completely. **1b** high off the ground. *saḥaab ʕaali* high cloud. **2** high-quality, superior. *ʔaxlaaq-u ʕalya* he has high moral standards, he is an upright man. *ʔit-taʕliim il-ʕaali* higher education. *daar il-qaḍaaʔ il-ʕaali* supreme court building. **3** statistically high. *nisba ʕalya* a high proportion. *ʔasʕaar ʕalya* high prices. ‖ *kunyaak ʕaali* high-proof cognac. **4** loud. *ʔir-radyu ʕaali ʔawi* the radio is very loud. **5a** rough (of the sea). **5b** shallow (of a river, in the jargon of Nile boat-men). **6** high (in pitch).

عال ʕaal[1] see ع ا ل [1].

علو ʕilw /n/ **1** height. *bi-ʕilw[i] raas-ak* as high as your head. **2** *[rur]* heap. *ʕilw[i] barsiim* a large amount of clover.

علوى ʕulwi or ʕilwi /adj */ **1** upper, above. *ʔid-door il-ʕulwi* the upper floor. **2** elevated, raised. *kubri ʕulwi* an elevated footbridge.

أعلى ʔaʕla /el/ higher/highest, louder/loudest, etc. *maglis ʔaʕla* supreme council. *ʔil-qaaʔid il-ʔaʕla* the supreme commander.

على ʕala /often shortened before def art to ʕa-; w pron suff ʕalee- (1st sing ʕalayya)/ preposition indicating **1** location upon, **1a** literally. *ʕaṭ-ṭarabeeza* on the table. *ʕala raas ig-gabal* on the top of the mountain. **1b** figuratively. *ʔis-salaamu ʕaleekum* peace be upon you. **2** location above, **2a** literally. *ṭayra ʕala ʃawaaʃi ʃ-ʃagar* flying above the treetops. *ʃibbaak bi-yṭull[a] ʕag-gineena* a window that looks out over the garden. **2b** figuratively. *raʔiis ʕala kull il-ʕummaal* supervisor over all the workers. *ma-tʕallii-ʃ ṣoot-ik ʕala ṣoot ʔabuu-ki* don't raise your voice above your father's! *ʔil-qassiis bi-yṣalli ʕala l-mariiḍ* the priest prays over the sick man. **3** location at. *saakin ʕala naṣyit if-faariʕ* living on the corner of the street. *ʕuum uʕʕud ʕal-maktab* go and sit at the desk. *biina nuʕʕud ʕal-ʕahwa* let's go and sit in the coffee house. **4** motion to a position upon, **4a** literally. *ʔil-maṭar baʕa naazil ʕala rus-na zayy il-ḥanafiyya* the rain started pouring down on our heads like water from a tap. **4b** figuratively. *farraʕit ʕeef ʕal-ʁalaaba* she gave out bread to the poor. **5** motion towards. *ʕala feen* where to? *hiyya gayya ʕaleena* is she coming towards us? *ʃaawir ʕalee* point to him! *misaafir ʕala skindiriyya* travelling to Alexandria. **6** temporal relationship, **6a** of a precise nature. *ga ʕal-maʕaad* he came at the appointed time. *ʕaṣ-ṣubḥ* first thing in the morning. **6b** of an approximative nature. *taʕaalu ʕas-saaʕa sitta* come around six o'clock. *ʕala ʔaaxir is-sana nkuun ʕirifna ʃwayyit ḥisaab* by the end of the year we will have learned some arithmetic. **6c** of an extended nature. *ḥa-niʕmil if-fugla ʕala tamant iyyaam* we'll do the job over eight days. *ʕala marr is-siniin* with the passing of the years. **7** antagonistic or adversative relationship. *ʔinta maʕaana walla ʕaleena* are you with us or against us? *ma-ʃuft[i]-ʃ ʕalee ḥaaga* I've seen nothing to his discredit. *waṭṭi n-naar ʕal-ḥalla ʃwayya* reduce the fire a little under the pot. ‖ *ʕalee* sick 'em! at him! (to a dog). **8** governance by a condition. *ʔil-farxa ʕaleeha l-beeḍa* the hen is about to lay. *ʔil-bint[a] ʕaleeha l-ʕaada* the girl is having her period. *ʕalee ʕafriit* he's possessed. **9** incumbency or duty. *ʕaleek kaam* how much do you owe? *ʔid-door ʕala miin* whose turn is it? *ʕaleek il-mafatiiḥ* the keys are your responsibility. ‖ *ma-ʕalek-ʃ[i] minnu* don't bother about him. *-ʕaleek min da b-ʔeeh* why should you have to do that? *-ʕal-alla* (it's up to God) ≈ let's hope ..., as in *ʕal-alla yiigi bukra* let's hope he comes tomorrow, *ḥa-yingaḥ is-sanaa-di -ʕal-alla* 'He'll pass (the exam) this year.' 'Let's hope so!' **10** object of reference or concern. *ʃukran ʕaʃ-ʃaay* thanks for the tea. *ʔiḥkii-li ʕalee* tell me about it. *saʔal ʕaleek* he asked after you. *ʕaṭafit ʕalayya* she showed tenderness toward me. *ʔis-safar sahl[a] ʕalayya* travel is easy for me. *bi-yquulu ʕalee ʕayyaan* they say he's sick. *niwazzaʕ filuus ʕala rooḥ il-mayyit* we distribute money for the sake of the deceased's soul. **11** relationship characterized by disproportion. *ʔid-dinya ḥarr[i] ʕalayya* it's too hot for me. *ʔil-fustaan kibiir ʕaleeha* the dress is too large for her. *di lissa ṣṿayyara ʕag-gawaaz* she's still too young for marriage. *lissa badri ʕal-ʁada* it's still too early for lunch. **12** ground or basis. *ʕala ʔeeh* what for? *ʕumuula ʕaz-ziyadaat* a commission on the extra sales. *ʔaʃtirii-ha ʕal-muʕayna* I'll buy it on condition that I give it a personal inspection. *ʕalaa-di l-ḥaal* in this state. **13** manner or form. *ʕala maraaḥil* in stages. *ʕala ʔaʃkaal* in (various) shapes or sorts. **14** accordance. *ʔugrit il-ʔiʕlaan titqaddar ʕala ʕadad ik-kalimaat* the charge for an advertisement is estimated according to the number of words. *bi-yitṣarraf ʕala qadd[i] sinn-u* he behaves in accordance with his age. *raqaṣit ʕaṭ-ṭabla* she danced to the drum. ‖ *ʕala keef-ak* as you wish. *-ʕala mihl-ak* easy does it! *-ʕala kida* (1) in this way, as in *ʔiḥna ʕala kida miʃ ḥa-nixlaṣ* we'll never get through if we go on like this. (2) that being the case, as in *huwwa ʕala kida miʃ ḥa-yiigi* if that's the situation, he won't be coming. (3) at that, with that, as in *xallaṣ kalaam-u ʕala kida* with that he stopped speaking. **15a** state.

bi-yḍarrabu l-budra ɛan-naafif they mix the powder dry. *mitgawwiza ɛala ḥubb* she married while in love, she made a love-match. *xallifit ʃawlad-ha ɛala kibar* she had her children when she was old. **15b** tendency. *ʃif-faariɛ ṭaaliɛ ɛala xafiif* the street slopes gently upward. *sinaan-u zayy' snaan il-miʃṭ' bassᵃ ɛala rfayyaɛ* its teeth are like those of a comb but on the thin side. *ɛaayiz in-naqʃa di bassᵃ ɛala ɣaamiq* I want this pattern but in a darker shade. **16** addition. *ʃiddii-ni xamsa kiilu burtuqaan ɛala kiilu yusafandi* give me five kilos of oranges and one of tangerines.

¶ *ɛala ma* /conj/ (1) by the time that. *ɛala ma wiṣlu kaan rawwaḥ* by the time they arrived he had gone home. *ɛala ma yiigi ḥ-akuun gaahiz* by the time he comes I shall be ready. (2) until. *xallii-ha ɛandi ɛala ma yiigi* leave it with me until he comes. *xallaa-ha ɛandına ɛala ma gum* he left it with us till they came. - *ɛala ʃinn* /conj/ (1) as if. *bi-yɛamluu-ni ɛala ʃinni bn-u-hum* they treat me as if I were their son. (2) on the assumption that. *kallımıt-ni ɛala ʃinni ʃana ɛali* she spoke to me thinking that I was Ali. - *ɛala baal ma* = *ɛala ma*. - *ɛalaʃaan* see ع ش ا ن - *maɛaliff, maɛaleef* see م ع ل ش ش

علي *ɛali* /prop n/ male given name. ‖ *ʃabu ɛali* (1) nickname for *ḥasan*. (2) epithet for a generous and noble man. *ɛamal ʃabu ɛali* to act the big-shot, spend lavishly and recklessly in an attempt to impress. - *wilaad ɛali bamba* street acrobats. - *ʃumm ɛali* confection made of layers of thin pastry and often with a stuffing of nuts and raisins, baked in sweetened milk and *samna*. - *ɛalı ɛawaq* epithet for a cart-driver.

علاوه *ɛılaawa* or *ɛalaawa* /n pl *-aat*/ rise in pay, increment.

¶ *ɛılaawa ɛala* /prep/ in addition to. *ɛalaawa ɛala kida* moreover.

علي *ɛalıyy* /n/ Most High One (epithet of God).

علّيوى *ɛilleewi* /adj invar/ *[slang]* higher, upper. *ʃɳ-ṭabaqa l-ɛilleewı* the upper class.

معالى *maɛaalı· ṣaaḥib ıl-maɛaali [obsol]* ≈ His Excellency (a form of reference to a cabinet minister).

أعالى *ʃaɛaali* /pl n/ heights, highest regions. *ʃaɛaali n-nıl* the the upper reaches of the Nile. *ʃil-magd' lı-llaah fıl-ʃaɛaali* glory to God in the highest. ‖ *ʃaɛaali l-bıḥaar* the high seas.

علالى *ɛalaalı. fil-ɛalaali* very high up. *ʃil-bint illi manaxır-ha fıl-ɛalaali* the girl with her nose in the air. *ʃil-asɛaar ṭaaḥit fıl-ɛalaali* prices shot sky-high.

تعالى *taɛaala'* see ت ع ا ل

علي *ɛalla* /vt/ **1a** to make high(er), make tall(er). *ɛallu ɛmaara* they put up a building. **1b** to raise (off the ground). *ɛalleet-u ḥaṭṭeet-u ɛala r-raff ıl-foqaani* I put it up on the top shelf. **2** to make superior, improve. *bı-yɛallu guudıt ıl-ʃintaag* they are improving the quality of production. **3** to raise statistically or quantitively. *ɛawzıin nıɛalli nisbıt il-ʃalyaaf ıṣ-ṣinaɛiyya* we want to increase the proportion of synthetic fibres. **4** to make loud(er). *ma-tɛallıi-ʃ ḥıss-ak* don't raise your voice! *ɛalleet ir-radyu* I turned up the radio. – /vi/ **5** to gain height. *ʃiṭ-ṭayyaara ɛallıt* the plane mounted into the sky. *ʃir-rıiʃa ɛallıt* the feather wafted up high. ‖ *ɛallı* shoo! (to a kite (bird)).

اتعلّى *ʃıtɛalla* /vı/ passive of *ɛalla*. - ıva *mitɛalli*.

اتعالى *ʃıtɛaala* /vı/ to act high and mighty. *ʃıl-mudıir bi-yitɛaalı ɛala l-muwaẓẓafiin* the manager lords it over the employees. - vn *taɛaali*; ava *mitɛaalı*.

تعالى *taɛaala*[2]: *ʃallaah subḥaan-u wa-taɛaala* God, praised and exalted is He.

استعلى *ʃıstaɛla* /vt/ **1** to consider (too) high, tall, loud etc. **2** to select for height, tallness, loudness etc. – /vi/ **3** *[naut]* to heave short. **4** to act high and mighty. - vn *ʃistiɛla*; ava *mistaɛlı*.

ع م ب ر see ع ن ب ر

ع م د [1]

عمد *ɛamd* **1** /n/ intent, deliberateness. *ʃil-mawḍuuɛ ḥaṣal kida mın veer ɛamd* the affair happened just like that without any intention. **2** /adj invar/ deliberate. *ʃil-ɢatl ıl-ɛamd* first degree murder. **3** /adv/ deliberately. *kasarit-u ɛamd' kıda* she broke it intentionally.

¶ *ɛamdan* /adv/ deliberately. *maɛquul ʃinni ʃaksar-u ɛamdan kida* is it conceivable that I should break it on purpose just like that?

عمده *ɛumda* **1** /n pl *ɛumad*/ headman of a village and its dependencies, mayor. **2** /adj invar/ placid, carefree. *ʃaxuu-k da raagil ɛumda* that brother of yours lives in a world of his own!

عمديّة *ɛumudiyya* /n/ area of jurisdiction of an *ɛumda*. *ʃintıxabaat ıl-ɛumudıyya* mayoral elections.

عماد *ɛımaad'* /n/ **1** male given name. **2** *(faarıɛ) ɛımaad id-dın* Emad ed-Din Street, a major thoroughfare running through north-central Cairo from Twenty-sixth of July Street to Bab el-Hadid Square.

عمادة *ɛimaada* /n/ deanship, position of a dean.

عمود، عامود *ɛamuud* /n pl *ɛawamiid, ɛimdaan, ʃaɛmıda*/ **1** post, pillar, column, shaft. *ɛamuud il-maṭaafı* fireman's pole. *ɛamuud ıd-dırıksıyoon [auto]* steering column. *ɛamuud il-kirdaan [auto]* transmission shaft. *ɛamuud ıd-daffa [naut]* rudder stock. ‖ *ɛamuud nuur* lamp-post. - *ʃıl-ɛamuud il-faqrı* the

spinal column. -*kabriit il-ʕamuud* raw sulphur. **2** column of print. **3** winding stem (of a watch or clock).

عمودة، عامودة *ʕamuuda* /n/ *[rur]* flail.

عمودى، عامودى *ʕamuudi* /adj/ perpendicular, vertical.

عميد *ʕamiid* /n pl *ʕumada*/ **1** *[acad]* dean. *ʕamiid iṭ-ṭalaba* dean of students. ‖*ʕamiid is-silk id-diblumaasi* the doyen of the Diplomatic Corps. **2** *[mil]* brigadier-general. *ʕamiid baḥri* commodore. *ʕamiid ṭayyaar* air-commodore.

عامد *ʕaamid· bil-ʕaamid* /adv/ **1** in order to spite or upset. *miʃ ḥ-aruuḥ bil-ʕaamid fiik* I am not going to go to spite you. **2** contrarily. *dayman yiʕmil bil-ʕaamid* he always acts contrarily.

اتعمّد *ʔitʕammid*[1] /vt/ to do (s.th.) intentionally. *bi-yitʕammidu taʔxiir gawabaat-i* they deliberately delay my letters. -ava *mitʕammid*.

تعامد *taʕaamud*↑ /n/ verticality, perpendicularity.

متعامد *mitʕaamid*↑ /adj */ perpendicular, at right angles.

اعتمد *ʔiʕtamad*↑ /vt/ **1** to endorse, approve, accept as valid. *ʔil-mudiir iʕtamad il-ʔiṣalaat* the director endorsed the receipts. *tawqiiʕ muʕtamad* an approved signature. *ʔiṣ-ṣuura di ma-tuʕtamad-ʃ fil-maḥkama* this copy is not admissible in court. **2** to allocate (a sum of money). *ʔiʕtamadu talatt alaaf gineeh liḍ-ḍaḥaaya* they allocated three thousand pounds for the victims. **3** to patent. ‖*buṣla muʕtamada* a standard compass. -/the literary passive form is found in all senses/. -vn *ʔiʕtimaad*; ava *muʕtamid*; pva *muʕtamad*.

¶ *ʔiʕtamad ʕala* to rely on, depend on. *ḥ-aʕtimid ʕala kilmit ḥaḍrit-ak* I shall rely on your word, Sir. *ʔil-musiiqa t-taṣwiriyya lil-baraamig bi-tiʕtimid ʕala l-mawḍuuʕ nafs-u* the background music for the programmes depends on the subject itself. *ʔiʕtamadna ʕala llaah* we have put our trust in God. ‖*ʔilli yiʕtimid ʕaleeku yiʕtimid ʕala llaah* he who depends on you (might as well) depend on God ≈ you are completely unreliable.

اعتماد *ʔiʕtimaad* /n pl -*aat*/ **1** endorsement. ‖*ʔawraaq iʕtimaad* letters of credence (e.g., of a diplomat). **2** allocation. **3** patent.

ع م د[2]

عماد *ʕimaad*[2] /n/ baptism.

معمدان *maʕmidaan: yuḥanna l-maʕmidaan* John the Baptist.

معمدانى *maʕmidaani* **1** /adj */ *[Chr]* Baptist. *ʔil-kiniisa l-maʕmidaniyya* the Baptist Church. **2** /n */ a Baptist.

معموديّة *maʕmudiyya* /n/ *[Chr]* baptism. *gurn*[i] *maʕmudiyya* font.

عمّد *ʕammid* /vt/ *[Chr]* to baptize. -vn *taʕmiid*; ava *miʕammid*; pva *muʕammad*.

اتعمّد *ʔitʕammid*[2] /vi/ *[Chr]* to be baptized. -iva *mitʕammid*.

ع م ر

عمر *ʕimir (a)* /vi/ **1** to prosper, thrive. *biyut-hum ʕimrit baʕd il-ḥarb* they did well after the war. ‖*dayman ʕaamir* ≈ may your house always be prosperous (said to a host after eating or drinking). **2** to become inhabited, be built up. *kull-a-ha sana wi-tneen wi-manṭiqit il-haram tiʕmar wi-tibqa zayy*[i] *maṣr* in no more than a couple of years the Pyramids area will be built up and will have become just like Cairo. **3** to be held (of a *muulid*). *muulid is-sayyida ḥa-yiʕmar min yoom ʔarbaʕtaafar* the *muulid* of the Sayyida (Zaynab) will be held from the fourteenth. *ʔeeh il-mawaalid illi ʕamraana dilwaqti* what *mawaalid* are being celebrated at the moment? -vn *ʕamaraan, ʕamaar*; ava *ʕaamir, ʕamraan*.

عمار *ʕamaar* /n/ **1** prosperity. ‖*rabb-i-na yigʕal-u ʕamaar* may Our Lord make it (i.e. your house) prosperous (said on refusing an offer of food or to one's host after eating). -*ma-fii-ʃ beeni w-beenu ʕamaar* we are not on good terms. **2a** development, civilization. **2b** built-up area, inhabited area. *ʔil-ḥitta di ʕamaar* this part is full of buildings.

عمران *ʕamraan* /adj */ **1** prosperous. **2a** developed, civilized. **2b** populated, inhabited. **3a** filled, charged, loaded. **3b** drunk, stoned, high. **4** in good condition.

عمرة *ʕamra* /n pl -*aat*/ overhaul, major repair job.

عمرى *ʕamri: balaḥ ʕamri* dates of an elongated yellow type, tough in consistency.

عمر *ʕumr* /n pl *ʔaʕmaar*/ life span, age. *ṭuul ʕumr-i* all my life long. *ʕumr-ak kaam* how old are you? *ma-fii-ʃ ʔagmal minnu l-kull in-naas wi-l-kull il-ʔaʕmaar* there's nothing better for all people of all ages. *tibqa mistaxni ʕan ʕumr-ak law xaragt* your life won't be worth living if you go out! ‖*baʕd*[i] *ʕumr*[i] *ṭawiil* (1) after a long life! (conventional exclamation to one who mentions his own death). (2) after a very long time. -*ʔil-ʕumr*[i] *waaḥid wir-rabb*[i] *waaḥid* ≈ one's destiny is decreed by God (said to abate fear of death). -*ʔiddii-ni ʕumr*[i] *wi-rmii-ni l-baḥr [prov]* (grant me a long life and you can throw me in the sea) ≈ you can do as you like if you can control the outcome.

¶ *ʕumr- ma-* modal of absolute negation. *ʕumr-i m-adaxxin* I never smoke. *ʕumr-i-na ma-biʕna b-ʔazyad min it-tasʕiira* we have never sold at higher than the

fixed price. *ʃik-kalaam da ɛumr-u ma-yitqaal* such a thing should never be said. *ʃik-kasal ɛumr-u ma-ygiib filuus* being lazy never makes money.

عمرة *ɛumra* /n/ *[Isl]* abbreviated form of the pilgrimage ceremonies which may be performed at any time of the year.

عمران *ɛumraan* /n/ upkeep, maintenance.

عمر *ɛumar* /prop n/ male given name. ‖*ya ɛumar [women in trad soc]* exclamation of contempt, as in *mustawaa-ha da ʃeeh ya ɛumar* ≈ pooh! where does she come from?!

عمارة *ɛimaara* /n pl *-aat, ɛamaayir/* **1** apartment building, block of flats. **2** construction, building and architecture. *qism il-ɛimaara* the Architecture Department.

معمارى *miɛmaari* /adj */ relating to building and architecture. *muhandis miɛmaarı* architect. ‖*diraaɛ miɛmaari* linear measure equal to 0.75 metres.

عمّر *ɛammar* /vt/ **1a** to cause to prosper. *rabb-i-na yɛammar beet-ak bi-barakit in-nabi* may Our Lord make your house prosper with the Prophet's blessing! (expression of gratitude). **1b** to build up, develop for habitation. *laazim yiɛammaru manṭiqit il-qanaal baɛd il-ḥarb* they have to build up the Canal area after the war. **2** to repair. *naadir dilwaqti lli yıɛraf yiɛammar ıs-sawaaqi* rare nowadays is someone who knows how to repair water-wheels. *kawaliin niɛammar [vendor's cry]* we repair locks! **3** to charge, load, fill (s.th.) with (fuel). *bı-tɛammar ıl-babuur gaaz* she fills the stove with paraffin. *bunduqıyya mɛammara* a loaded rifle. ‖*ɛammar iṭ-ṭaasa* to get loaded, get stoned. -*giyuub-u mɛammara* he's loaded with money. -*ruzz' mɛammar* baked rice pudding with nuts and raisins. — /vi/ **4** to last, stay in good condition. *laazim tiraaɛi l-ɛarabıyya ɛafaan tiɛammar* you must see that the car is looked after so that it lasts. **5** *[agric]* to plant (a crop). *ḥa-tɛammar ʃeeh is-sanaa-di* what are you going to plant this year? -vn *taɛmiir*; ava/pva *miɛammar*.

تعميرة *taɛmiira* /inst n, pl *-aat/* **1** a fill, sufficient fuel to fill a stove or the like once. **2** sufficient tobacco or hashish for one smoke.

معمّر *miɛammar* /adj */ **1** long-lived. **2** *[hort]* perennial.

اتعمّر *ʃitɛammar* /vi/ **1** passive of *ɛammar*. **2** to get high, get stoned (on, e.g., alcohol or drugs). -iva *mitɛammar*.

استعمر *ʃistaɛmar* /vt/ to occupy, colonize. -vn *ʃistiɛmaar*; ava *mustaɛmir, mistaɛmar*; pva *mustaɛmar, mistaɛmar*.

استعمار *ʃistiɛmaar* /n/ colonialism.

استعمارى *ʃistiɛmaari* /adj/ colonial.

مستعمر *mustaɛmir* /n */ colonialist.

مستعمرة *mustaɛmara* /n pl *-aat/* **1** *[pol]* colony. **2** housing and social development (e.g., for the employees of a company).

ع م ش

عمش *ɛamaʃ* /n/ blear-eyedness.

أعمش *ʔaɛmaʃ* /adj, fem *ɛamʃa*, pl *ɛumʃ/* purblind, dim-sighted. ‖*ɛala ma titkaḫḫal il-ɛamʃa ykuun is-suuq xirib [prov]* by the time a dim-sighted woman has painted her eyes the market is over (of one who is too slow to snap up an opportunity).

ع م ص

عماص *ɛumaaṣ* /n/ **1** sandman's dust, sleepy dust. **2** purulent discharge from the eyes.

عمّص *ɛammaṣ* /vi/ to produce a discharge (of the eyes). ‖*waad miɛammaṣ* an oaf. -vn *taɛmiiṣ*; ava *miɛammaṣ*.

ع م ق

عمق *ɛumq, ɛumqˆ* /n pl *ʔaɛmaaqˆ*/ depth.

عميق *ɛamiiqˆ* /adj/ deep. *fuɛuur ɛamiiq* profound feeling.

أعمق *ʔaɛmaq* /el/ deeper/deepest.

اتعمّق *ʃitɛammaq* /vi/ to go deeply, become deeply involved. *ʃilli ɣaawi dars' b-yitɛammaq fil-mawḍuuɛ* the one who is keen to study goes deeply into the subject. -vn *taɛammuq*; ava *mıtɛammaq, mutaɛammiq*.

ع م ل

عمل *ɛamal' (i)* /vt/ **1** to do. *ḥa-tiɛmil ʃeeh bil-filuus di* what will you do with this money? *ɛamalna fiik ʃeeh* what have we done to you? ‖*ɛamal illi ma-yitɛimil* to do the impossible. -*ɛamal wı-sawwa* to perform great exploits, do wonders, as in *wi-qaɛad yiquul ɛamalt' w-sawweet wi-mif ɛaarif ʃeeh* and he went on saying how he'd done this, that and I don't know what else. **2a** to make, manufacture, prepare. *ʃit-tarzi ɛamal-li l-badla f-yomeen* the tailor made me the suit in two days. *ʃil-ʃaqfaaṣ maɛmuula mig-giriid* the crates are made of palm-stalk. *ʃil-ḥaraami ɛamal faṭḥa fil-ḥeeṭa daxal minha* the thief made a hole in the wall through which he entered. *ʃiɛmil-li kubbaayit lamuun* make me a glass of lemonade. **2b** to have made, have manufactured, have prepared. *ɛamalt' fustaan ɛand il-xayyaaṭa lli gambiina* I had a dress made by the dressmaker near us. *ɛamalt' karaasi gdiida liṣ-ṣaloon* I had new chairs

made for the sitting room. **3** to create, devise. *miin ʕamal il-qiṭʕa l-musiqiyya di* who wrote this piece of music? *ʃismaḥ-li bass illi ʕamal il-qanuun da ḥmaar* excuse me (for saying so), but the person who drew up this law is an ass. **4** to form. *ʃil-quṭn[i] ʕamal looz* the cotton formed bolls. *ʃig-garḥ[i] ʕamal midda* the wound turned septic. **5a** to fix, see to. *wi-ḥayaat-ik ʃiʕmili zuraar il-ʔamiiṣ* please, would you fix the shirt button? *xalli s-sabbaak yiigi yiʕmil is-sifoon* get the plumber to come and see to the cistern. **5b** to have fixed or seen to. *dayman b-aʕmil ʕarabiyyit-i fil-ʃajans* I always have my car fixed at the dealer's. **6** to cause. *ʃil-ʕiyaal ʕamliin dawʃa* the children are making a racket. *ʃumbuubit il-butagaaz ʕamalit ḥariiʔa* the butane gas cylinder caused a fire. *ʕamalu maʃaakil fi-kull[i] ḥitta raḥuu-ha* they made problems wherever they went. **7** to mount, put on. *kull[i] ʃusbuuʕ tiʕmil ḥafla* every week she throws a party. *ʃimta ḥa-tiʕmilu masraḥiyyit ʃaaxir is-sana* when are you going to put on the end-of-year play? **8a** to make into, turn into. *xudi t-tiin da ʕmilii marabba* take these figs and make them into jam. **8b** to cause to be. *ʕamal-ni mudiir ʕala kull if-firka* he made me director of the whole company. **8c** to make (o.s.) out to be. *ʕamalit (nafs-a-ha) ʕabiiṭa* she played the fool. *ʕamalt[i] (nafs-i) naayim* I pretended to be asleep.

9 to commit. *ʕamalt[i] znuub kitiir* I committed many sins. *ʕamal is-sabʕa w-dimmit-ha* he left no sin uncommitted. **10** to yield. *ʃil-ʃashum ʕamalit sitta fil-miyya* the shares realized six percent. *ʃil-faddaan ʕamal xamas ʔanaṭiir ʔuṭn* the feddan yielded five *ʔinṭaar* of cotton. **11** to effect. *ʕamalt[i] sulfa mil-bank* I arranged a loan from the bank. *ʃiẓ-ẓaabiṭ ʕamal-li maḥḍar* the officer made out a charge against me. **12** to assign, designate. *b-aʕmil-laha ʕaʃara saaʏ fil-ʃusbuuʕ* I put ten piastres aside for her a week. *ʃil-mudarris ʕaamil lina saaʕa lil-muragʕa* the teacher is giving us an hour for revision. ‖ *ʕamal ḥisaab* see *ḥisaab*. **13a** to perform, carry out. *mumkin tiʕmil-li xidma* could you do me a service? *ʃid-duktoor da b-yiʕmil il-muṣraan il-ʃaʕwar bass* that doctor only does appendectomies. ‖ *ʃil-ʕarabiyya b-tiʕmil xamsiin kiilu fig-galoon* the car does fifty kilometres to the gallon. **13b** to have performed, have carried out. *ʕamalt[a] ʕamaliyya* I had an operation. – /vi/ **14** to behave, act. *bi-yiʕmil zayy in-naas ig-gahala tamaam* he acts just like an ignoramus. *ḥ-aʕmil bi-kalaam-ak* I'll do as you say. *ʃilli b-yiʕmil bi-yiʕmil bi-ʃaṣl-u [prov]* people act in all things according to their background. ‖ *yiʕmil zayy innaas [euphem]* to go to the lavatory. **15** to work. *ʕamal bi-ʃakl-u* he worked for his food. **16** to become. *ʕamal raʃiis gumhuriyya* he became President of the Republic. *ʕamal-laha ʃabb[i] w-zoog wi-ʃaxx[i] kamaan* he became to her a father, husband and brother as well. - vn *ʕamal, ʔimaala, ʕamalaan*; ava *ʕaamil*; pva *maʕmuul*. ¶ *ʕamal zayy* to become like. *ʃil-ʕaya xallaa-ha ʕamalit zayy il-ʕaṣaaya* illness made her as thin as a stick. *manaxiir-u ʕamla zayy[i] munʔaar il-ʏuraab* his nose looks like a crow's beak.

عمل *ʕamal*[2] /n/ **1** black magic, sorcery. *maʕmul-luhum ʕamal* a spell has been cast against them. – /pl *ʃaʕmaal*/ **2** act, action. *gadwal ʃaʕmaal* agenda. *ʃahamm[i] ʃaʕmaal il-ḥigg il-ʃiḥraam* the most important of the acts of pilgrimage is the putting on of the pilgrim dress. ‖ *wil-ʕamal* or *wi-ʃeeh il-ʕamal* what's to be done? *-sifr il-ʃaʕmaal [Chr]* the Acts of the Apostles. **3** work, job of work. *laazim ninaẓẓam il-ʕamal* we have to organize the work. *ʕamal-u ʃeeh* what's his job? *ʃaʕmaal ʃidariyya* administrative jobs. *ʃaʕmaal ʃafawiyya w-taḥririyya* oral and written work. *ʃaʕmaal is-sana [acad]* (marks given for) the year's classwork. **4** operation, manoeuvre. *ʃaʕmaal ḥarbiyya* military operations. **5** feat, exploit. *ʕamal xaariq* a breakthrough. – *ʃaʕmaal* /pl n/ **6** business. *raagil ʃaʕmaal* a businessman. *ʕandi ʃaʕmaal kitiir fi-maṣr* I've a lot of business to do in Egypt.

عملى *ʕamali* /adj/ practical. *taṭbiiq ʕamali* practical application.

عامل *ʕaamil[1]* /n/ **1** /pl *ʕummaal*/ labourer, worker. **2**↑ /pl *ʕaamiliin*/ employee. ‖ *ʃuʃuun il-ʕaamiliin* personnel department. **3** /pl *ʕawaamil*/ **3a** factor. *ʃahamm[a] ʕaamil bin-nisbaa-li z-zaman* the most important factor as far as I'm concerned is the time. **3b** agent. *ʕawaamil muʃaksida* oxidizing agents. – /adj */**4**↑ active, diligent. *ʃil-ʃaʕḍaaʃ il-ʕaamiliin* the active members.

عمّالى *ʕummaali* /adj */ pertaining to labour. *ʔaḍaaya ʕummaliyya* labour issues.

عملة *ʕamla* /n pl *ʕamaayil*/ deed, act (usually bad). *ʕamalt[a] ʕamla ma-hiyyaa-ʃ laṭiifa* I did something that was not nice. *leeh il-ʕamaayil di* why this (bad) behaviour? *miskuu f-ʕamlit-u* they caught him in the act, they caught him redhanded.

عملة *ʕumla* /n pl *-aat*/ currency, money. *ʃil-ʕumla ṣ-ṣaʕba* hard currency.

عمليّة *ʕamaliyya* /n pl *-aat*/ **1** process, operation. *ʕamaliyya ṣnaʕiyya* an industrial process. *ʕamaliyyaat ṭibaaʕa* printing processes. ‖ *ʃil-ʕamaliyya g-ginsiyya* the sexual act. **2** surgical operation. *ʕandaha qurḥa*

ʕayza ʕamaliyya she has an ulcer that needs operating on. ʕamalt' talat ʕamalıyyaat I had three operations. **3** matter, business. *di ʕamaliyya basiiṭa* this is a simple matter. ʕamaliyyit it-tadriis di muqrıfa this teaching business is foul. **4** work done. *kull' maktab bi-yibʕat il-ʕamaliyya l-qism ıl-muragʕa* each office sends the completed work to the checking department.

عماله ʕimaala /n/ employment. ʕımaala kamla full employment.

عمولة ʕumuula **1** /n pl *-aat*/ commission, percentage. *ʃil-muntigiin bi-yıddu ʕumuula lil-bayyaʕiin* the producers give a commission to the salesmen. *ʃil-bank' b-yaaxud ʕumuula ʕala kull' sulfa* the bank takes a commission on every loan. **2** /adj invar/ well-made by a fine craftsman (particularly of furniture). *karaasi ʕumuula* chairs fashioned by a master carpenter.

عميل ʕamiil /n pl *ʕumala*/ **1** client, customer. **2** agent.

عمّال ʕammaal **1** /fem *ʕammaala*, pl *ʕammaliin*/ modal of continuation. *qalb-i ʕammaal yıtaktik* my heart keeps on ticking. *ʃil-balaawi ʕammaala titḫaddif ʕaleena* disasters keep on befalling us. *ʕammaliin yiftaɤalu* they keep on working. *ʕammaal-ak tuḫṣud ʕidaan il-qamḫ* you continue to harvest the wheat stalks. *naazil ʕal-ḫalla ʕammaal yaakul* he's busy stuffing himself from the pot. **2** /adv/: *ʕammaal ʕala baṭṭaal* incessantly and to no purpose, as in *bi-yaakul ʕammaal ʕala baṭṭaal* he eats all the time, whether hungry or not.

معمل maʕmal /n pl *maʕaamıl*/ **1** laboratory. ‖*maʕmal tafriix* incubator for chicks. **2** factory, workshop.

اتعمل ʃitʕamal /vi/ passive of *ʕamal*. - iva *mıtʕimil*.

انعمل ʃinʕamal = *ʃitʕamal*. - iva *minʕımil*.

عمّل ʕammıl /vi/ to suppurate, produce pus. *ʃıdhin-ha marham lamma tʕammil* put ointment on it until it comes to a head. - vn *taʕmiil*; ava *miʕammil*.

عامل ʕaamil[2] /vt/ **1** to treat, deal with. *ma-yiʕraf-ʃ' yiʕaamil ın-naas* he doesn't know how to treat people. ‖*bi-yʕaamıl rabb-i-na* he has principles. *ʃıllı bı-yʕaamıl bi-yʕaamil rabb-i-na* ≈ do unto others as you would do unto God. **2** to transact business with. *b-aʕaamil tuggaar ıg-gumla* I deal with the wholesale merchants. *muʕamlıt-u zayy id-dahab* he is scrupulously honest, he pays on the nail. - vn *muʕamla*; ava *miʕaamil*.

معامله muʕamla /n/ **1** treatment. *muʕamla xaṣṣa* special treatment. **2** hard cash, currency. — /pl *-aat*/ **3** transaction. *ʃıf-firka liiha muʕamlaat fil-xaarig* the company has dealings abroad.

اتعامل ʃitʕaamil /vi/ **1** to manage, conduct oneself (in relation to another). *baqa mif ʕarfa titʕamli maʕa l-xaddaama* you mean you can't cope with the maid? *ʃil-muwaẓẓaf laazim yiʕraf yitʕaamil maʕa g-gumhuur* the official has to know how to deal with the public. **2** to transact business. *kaanit in-naas bi-titʕaamil bil-mubadla* people used to do business by barter. *bi-yitʕaamil maʕa n-naas bif-faraf* his word is his bond. - vn *taʕaamul*; ava *mitʕaamil*.

استعمل ʃistaʕmil /vt/ to use, employ. *bi-nistaʕmil ʃanwaaʕ kitiir min il-waraq* we use many kinds of paper. -/the literary passive form occurs in unelevated speech/ *ʃil-ɤazaat istuʕmilat fil-ḫarb* gases were used in the war. - vn *ʃistiʕmaal*; ava *mustaʕmil*; ava/pva *mistaʕmil*; pva *mustaʕmal*.

استعمال ʃistiʕmaal /n pl *-aat*/ **1** use. *kull" ḫaaga liiha stiʕmaal muʕayyan* everything has a particular use. **2** linguistic usage.

مستعمل *mustaʕmal* /adj/ used, second-hand. *ʕarabiyyaat mustaʕmala* used cars.

ع م ل ق

عملاق ʕimlaaqˆ /n pl *ʕamaaliqa*/ giant.

ع م م[1]

عمّ ʕamm' *(i, u)* **1** /vt/ to pervade, prevail over. **2** /vi/ to become general or prevalent or common, spread, prevail. *ʃil-balwa bi-tʕimm' wir-raḫma bi-txuṣṣ [prov]* calamities overtake (everyone) but acts of mercy are only enjoyed by the few. - vn *ʕamamaan, ʕumuum*; ava *ʕaamim*.

عموم ʕumuum /n/ generality. *ʃil-ʕidda lli b-yistaʕmiluu-ha ʕumuum ıl-kahrabaʃiyya* the equipment which the general run of electricians use. ‖*ʕal-ʕumuum* or *ʕala l-ʕumuum* anyway, in any case, as in *ʕal-ʕumuum ma-fiı-ʃ daaʕi lil-munaqʃa dilwaqti* anyway, there is no point in arguing now.

¶ ʕumuuman /adv/ (1) generally, in general. *ḫa-nitkallim ʕumuuman wi-bit-tafaṣiil* we will speak generally and in detail. (2) generally, usually. *ʃıt-ṭalaba ʕumuuman bi-ygiibu k-kutub min il-madrasa nafs-a-ha* the students generally get the books from the school itself.

عمومی ʕumuumi **1** /adj */ general, usual, main. *maxzan ʕumuumi* general warehouse. *ʃil-baab il-ʕumuumi* the public entrance. *faariʕ ʕumuumi* main road. **2** /adv/ generally, in the usual way. *ʃis-siluuk lli gayya ʕumuumi lil-mutoor* the wires that come in the normal way to the motor.

عامّ ʕaam', ʕamm[2], ʕaamm /adj */ **1** general, overall. *ʃil-qiyaada l-ʕamma* general headquarters. *ʃil-qaaʃid il-ʕaamm* the Commander-in-Chief. *fil-ɤaalib il-ʕaam* in most cases. **2** public. *ʃil-maṣlaḫa il-ʕamma* the public

interest. *muḥaḍra ɛamma* public lecture. *ʕil-qiṭaaɛ il-ɛaamm* the public sector (of the economy).

عامّه *ɛamma*[1], *ɛaamma* /n/ generality. *ɛammit if-faɛb* the general public. *xalla t-taɛliim lil-ɛamma baɛd*[i] *ma kaan lil-xaṣṣa* he made education available to everyone after it had been only for the privileged.

عامّى *ɛammi* /adj * and pl *ɛawaamm*/ illiterate. *ʕir-raagil il-ɛammi wil-mutaɛallim* the illiterate man and the educated. ‖*(ʕil-luɣa) l-ɛammiyya* the vernacular language.

العوامّ *ʕil-ɛawaamm* /pl n/ the common people.

أعمّ *ʕaɛamm* /el/ **1** more/most general. **2** more/most widespread.

عمّم *ɛammim*[1] /vt/ to propagate, make widespread. -vn *taɛmiim*; ava/pva *miɛammim*.

اتعمّم *ʕitɛammim*[1] /vi/ **1** to be or become propagated, become or be made widespread. *ʕil-fikra tɛammimit* the idea gained currency. **2** to be or become generalized. -iva *mitɛammim*.

ع م م[2]

عمّ *ɛamm*[3] /n/ **1a** /pl *ʕaɛmaam*/ paternal uncle. **1b** title of, and form of address and reference to, a man treated as an uncle. *ma-tqulii-ʃ lu ya ɛamm-i - ʕinti ḥa-tkabbarii qabl il-ʕawaan* don't call him 'Uncle'; you'll make him old before his time! **2a** respectful title of, and form of address and reference to, a man (usually) older than the speaker and of the lower social classes. *ʕil-quuṭa b-kaam ya ɛamm* how much are your tomatoes, Uncle? *ʃuft*[a] *ɛamm*[i] *makki l-bawwaab* have you seen Uncle Makki the doorman about? **2b** informal term of address to a male ≈ mate, buddy. *ɛala feen ya ɛamm* where to, mate? *da kalaam ya ɛamm* is that any way to behave, buddy?

عمّة *ɛamma*[2] /n pl *-aat*/ paternal aunt.

ع م م[3]

عمّة *ɛimma* /n pl *ɛimam*/ **1** headgear consisting of a skullcap or tarbush wound around with a length of fine white cotton cloth to form a turban (see Pl.F, 12). ‖*tikabbar ɛimmit-na* you make us proud. **2** moulded black felt hat worn by Coptic clergy. ‖*ḥa-yilbis il-ɛimma* he is going to be ordained.

عمامة *ɛimaama* /n pl *ɛamaayim*/ turban.

عمّم *ɛammim*[2] /vt/ **1** to make (a *ɛimma*) by winding a white cloth around a skullcap or tarbush. **2** to dress (s.o.) in a *ɛimma*. -vn *taɛmiim*; ava/pva *miɛammim*.

اتعمّم *ʕitɛammim*[2] /vi/ to put on a turban. -ava *mitɛammim*.

ع م ن و

عامنوّل *ɛamnawwil* /adv/ last year. *ʕawwil ɛamnawwil* the year before last.

ع م ى

عمى *ɛimi (i)* /vi/ to become blind. ‖*sikir lamma ɛimi* he got blind drunk. -vn *ɛama*; ava *ɛamyaan*.

عمى *ɛama*[1] *(i)* /vt/ to blind. *rabb-i-na yihdii-k wi-yiɛmi ɛeen-ak ɛan il-ḥaraam* God guide you and close your eyes to evil. *ʕid-duxxaan il-ɢurayyib yiɛmi [prov]* ≈ smoke gets in your eyes (objectivity is impossible when one's emotions are involved). -vn *ɛamayaan*; ava *ɛaami*; pva *maɛmi*.

عمى *ɛama*[2] /n/ blindness. ‖*ʕil-ɛama ya badr [prov]* blindness, O moon! (said of one who is blind to the radiantly obvious). -*ma-yiɛraf-ʃ is-sama mil-ɛama [prov]* ≈ he can't tell black from white. -*ḥa-taxud-ni ɛala ɛamaa-ya* are you going to take advantage of my ignorance? -*ḥilt-u l-ɛama l-ʕazraɢ* he's stony broke.

عميان *ɛamyaan* /adj */ **1** blind. **2** ignorant, unaware. — /adv/ **3** dazed. *daxal il-beet ɛamyaan* he went into the house not knowing where he was.

عيانى *ɛimyaani* /adv/ blindly, without looking, without knowing.

أعمى *ʕaɛma* /adj, fem *ɛamya*, *ɛamyaaʕ*[f], pl *ɛumy*, *ɛimyaan*/ blind. *ṭaaɛa ɛamyaaʕ* blind obedience. ‖*ʕeef ɣaraɢ il-ʕaɛma ɢaal ɢuffit ɛiyuun [prov]* what could a blind man want more than a basketful of eyes? (said when something longed for is offered). -*xamsa saaɣ ɛumy* a measly five piastres. *talaata gneeh ɛumy* a measly three pounds.

اتعمى *ʕitɛama* /vi/ passive of *ɛama*. -iva *mitɛimi*.

اتعامى *ʕitɛaama* /vi/ **1** to pretend to be blind. **2** to pretend not to notice, turn a blind eye. -ava *mitɛaami*.

استعمى *ʕistaɛma* /vt/ **1** to select for blindness. **2** to consider (too) weak sighted. — /vi/ **3** to feign blindness, act like a blind man. -ava *mistaɛmi*.

ع م ى و

عميو *ɛamyu* /n/ style of serving in the game of *xara* (q.v.).

ع ن

عن *ɛan* /w pron suff: *ɛanni*, *ɛannak*, *ɛannik*, *ɛannu*, *ɛanha/ɛannaha*, *ɛanna/ɛannina*, *ɛanku(m)/ ɛannuku(m)*, *ɛanhum/ ɛannuhum*/ preposition indicating **1** object of concern. *kitaab ɛan faransa* a book about France. *ɛandak ʕayy*[i] *fikra ɛan il-ʕiwaḍ* do you have any idea about the rooms? *kalam-kum ɛan miraat-i laazim yintihi* your gossip about my wife must

stop. **2** distance or separation. *ʃinta qaaʕid biʕiid ʕanni leeh* why are you sitting apart from me? *kaanit tayha ʕan baal-i* it had slipped my mind. *ʃahu nzaaḥ ʕanni* well, he's off my back! *ʃana m-axrug-ʃ' ʕan ṭooʕ-ak ʃabadan* I'll never disobey you. ‖*xud ʕannu ʃ-ʃanṭa* relieve him of the bag! take the bag off him! - *(xalli* or *haat) ʕannak* let me take that for you, let me do that for you. **3** comparative relationship. *ʃil-ʕilba di kbiira ʕan di* this box is larger than that. *miʃ ḥa-traxxaṣ-ha ʕan kida ʃwayya* won't you make it a bit cheaper than that? *ʃil-waram bi-yxiff' yoom ʕan yoom* the swelling gets better every day. **4** basis, source, authority. *ʕan miin ik-kalaam da* on whose authority is that said? *maktuub ʕan yadd' waaḥid muḥaami* written under the hand of a lawyer. *ʃana wafiqt[a] ʕan ʃiqtinaaʕ* I agreed out of conviction. *ma-b-yikkallimuu-ʃ ʕan ʕilm* they don't speak from actual knowledge. ‖*ʕan ʃizn-ak* by your leave. - *ʕan ṭariiq* by way of, via. **5** location in relation to a fixed point. *ʕan ʃimaal-u waaḥid wi-ʕan yimiin-u waaḥid taani* on his left there's one and on his right there's another.

¶ *wi-ʕanha wi-* thereupon, right then, as in *ʃatam-ni qumt' raadid ʕalee fa-ziʕil baqa w-ʕanha w-raaḥ rafid-ni* he insulted me so I answered him back; then he got offended and fired me then and there. - *ʕan(nu) ma-..* who the hell cares if (he) does not ..., as in *ʕannak ma-ruḥt* who the hell cares if you don't go?

ع ن ب

عنب *ʕinab* **1** /coll n/ **1a** grape(s). *ʕinab id-diib* (or *it-taʕlab*) gooseberries. **1b** grape vine. *waraq ʕinab* vine leaves. **2** /adj invar/ luscious.

عِنبة *ʕinaba* /unit n, pl *-aat*/ **1** a grape. **2** a vine.

عِنّاب *ʕinnaab* /coll n/ jujube(s).

عِنّابة *ʕinnaaba* /unit n, pl *-aat*/ a jujube.

عِنّابى *ʕinnaabi* /adj invar/ reddish-brown.

[1] ع ن ب ر

عنبر *ʕanbar[1], ʕambar[1]* /n/ ambergris (used in particular as an aphrodisiac).

عنبرى *ʕanbari* /n pl *ʕanabra*/ pigeon of a reddish-brown breed.

[2] (ع ن ب ر)

عنبر *ʕanbar[2], ʕambar[2]* <T *ambar*> /n pl *ʕanaabir*/ **1** large hall or shed (as in a factory or works). **2** hospital ward. **3** hold (of a ship). ‖*ʕambar ir-rukkaab [naut]* steerage. **4** block (as in a barracks or prison).

عنبر *ʕambar[3]: ʃambar wi-ʕambar* see *ʃambar[4]*.

ع ن ت

اتعنّت *ʔitʕannit* /vi/ to be stubborn, be difficult. - ava *mitʕannit*.

تعنّت *taʕannut* /n/ pig-headedness, stubbornness.

ع ن ت ب

عنتبلى *ʕantabli* /prop n/ *[obsol]* **1** brand name for a type of water-pipe tobacco. **2** (any type of) *miʕassil*.

ع ن ت ر

عنتر *ʕantar* /prop n/ Antar (in full, *ʕantar ibn' ʃaddaad)*, a hero of folk epic. *ḥ-aʕmil ʕamaayil ma-ʕamal-haaʃ ʕantar* I shall do deeds such as even Antar never did! I shall amaze you all!

عنترى *ʕantari* /n/ *[rur, obsol]* vest similar to a *sideeri* (q.v.) with long tight sleeves.

ع ن ت ل

عنتل *ʕantal* /vt/ to complicate. *ma-tʕantal-haa-ʃ* don't complicate matters! - vn *ʕantala*; ava/pva *miʕantal*.

عنتيل *ʕantiil* /n pl *ʕanatla*/ veteran.

ع ن ج ر

عنجر *ʕangar* /vt/ to set (a hat) at an angle on the side of one's head. - vn *ʕangara*; ava/pva *miʕangar*.

اتعنجر *ʔitʕangar* /vi/ passive of *ʕangar*. - iva *mitʕangar*.

ع ن ج ه

عنجهة *ʕangaha* /n/ conceit, self-importance.

عنجهيّة *ʕangahiyya = ʕangaha*.

اتعنجه *ʔitʕangah* /vi/ to act in a conceited manner, play the big-shot. - ava *mitʕangah*.

[1] ع ن د

عند *ʕand* preposition indicating **1** vicinity. *ḥa-ninzil ʕand il-maḥaṭṭa* we'll get out at the station. *daxalna ʕand' ʃibbaak it-tazaakir* we went in by the ticket office. ‖*ʃistanna ʕandak* stay where you are! - *ʕandak* stop what you're doing! hold it! **2** place of residence, work or business. *ḥa-yitvadda ʕandina bukra* he is going to have lunch at our house tomorrow. *lissa gayy' min ʕand id-duktoor* (I've) just come from the doctor's. *ḥa-tlaaqi zabaadi ʕand' ʃayy' baqqaal* you can get yoghurt at any grocer's. **3** (approximate) time. *ʕand il-fagr* around dawn. *ʕand il-luzuum* when necessary. *ʕand il-ʃazamaat* in times of crisis. **4** accidentality. *ʕandu rigl' ʃaṭwal mit-tanya* he has one leg longer than the other. *ʕandaha l-qalb* she has a bad heart. *ʕandi ṣdaaʕ* I have a headache. *ʕandak kaam sana* how old are you? *ʕandu*

ʃahreen he is two months old. *ʕandi fikra ħilwa* I've got a good idea. *ʕanduhum ʃagaaza* they have a holiday. **5** ownership. *ʕandu ʕmarteen* he owns two apartment buildings. **6** present possession. *ma-ʕandii-ʃ fakka* I don't have any change. *ʕanduku ʕeef* do you have any bread? *kull-u ʕand allaah* ≈ God knows all about it and will reward me (said, e.g., in response to ingratitude). *ʃiħna liina ʕandu gneeh* he owes us a pound. *ma-lak-ʃ*^{i} *ʕandi ħaaga* I don't owe you anything, I'm under no obligation to you. **7** opinion. *huwwa ʕandi zayy axuuya* I regard him as a brother. *ʃana ʕandi ma-ygii-ʃ xaaliṣ ʃaħsan* in my opinion it would be better for him not to come at all. *ʃabɣaḍ il-ħalaal ʕand allaah iṭ-ṭalaaq* the most odious of the things God permits is divorce. *ma-gab-ʃ*^{i} *ħaaga min ʕandu* he added nothing of his own, he said nothing new. *ʃinta baqa ma-tgib-ʃ*^{i} *min ʕandak* (now that things have calmed down) don't you start making trouble! **8** association, community. *fikra miʃ maqbuula ʕand iʃ-ʃabaab* an idea unacceptable to young people. *dafn il-mawta ʕand il-ʃaqbaaṭ lii ṭariiqa xaṣṣa* among the Copts there are particular burial customs. *ʕandina fil-balad ṃa-ħadd*^{i}*-ʃ bi-yiʕmil kida* in the village I come from no one does that. **9** conformity. *ʃana ʕand*^{i} *waʕd-i* I abide by my promise.

ع ن د ^{2}

عند *ʕanad, ʕinid (i)* /vi/ to behave stubbornly. - vn *ʕind*; ava *ʕaanid*.

عند *ʕind* /n/ stubbornness, obstinacy. ‖*bil-ʕind*^{i} *fi-...* out of spite towards, as in *wi-baʕdeen bil-ʕind*^{i} *fiyya bi-yḥibb il-bint*^{i} *di* and what's more, just to spite me, he's fallen in love with that girl. - *ʕaamil bil-ʕind* he is acting perversely.

عندى *ʕinadi* /adj */ obstinate, stubborn.

عنيد *ʕaniid* /adj */ stubborn.

عاند *ʕaanid* **1** /vt/ to oppose stubbornly. *ʃiz-zaman miʕanid-ni* nothing goes my way. **2** /vi/ to act stubbornly. *ṭuul ʕumr-ak ʃinta mʕaanid kida* you've always been stubborn. - vn *ʕinaad, miʕanda*; ava *miʕaanid*.

اتعاند *ʃitʕaanid* /vi/ **1** to be opposed stubbornly. **2** to oppose one another. - ava/iva *mitʕaanid*.

ع ن د ل ب

عندليب *ʕandaliib* /n pl *ʕanaadil*/ nightingale. ‖*ṣabaaḥ il-ʕandaliib* ≈ the top of the morning to you!

(ع ن ز)

عنزة *ʕanza* /n pl *-aat*/ she-goat. ‖*bizz il-ʕanza* variety of white elongated grape.

عنز *ʕanaz* (also *ʃabu ʕanaz*) /coll n/ stork(s).

ع ن س

عانس *ʕaanis* /n pl *ʕawaanis*/ spinster.

ع ن ص ر ^{1}

عنصر *ʕunṣur* /n pl *ʕanaaṣir*/ element, factor. *ʃil-ʕanaaṣir il-masʃuula ʕan nagaḥ-ha* the factors responsible for her success.

عنصرى *ʕunṣuri* /adj/ racial. *naẓariyya ʕunṣuriyya* a racial theory.

ع ن ص ر ^{2}

العنصرة *ʃil-ʕanṣara* <Heb> /n/ *[Chr, Jud]* Pentecost.

ع ن ط ز

عنطزة *ʕanṭaza* /n/ arrogance, haughtiness.

عنطوز *ʕanṭuuz* /adj pl *ʕanaṭiiz*/ arrogant.

اتعنطز *ʃitʕanṭaz* /vi/ to behave in an arrogant or haughty fashion. - ava *mitʕanṭaz*.

ع ن ع ن

عنعنة *ʕanʕana* /n/ chain of transmission (of hadith or other moral traditions).

ع ن ف

عنف *ʕunf* /n/ violence, force.

عنيف *ʕaniif* /adj */ violent, severe.

عنف *ʕannif* /vt/ to rebuke severely. - vn *taʕniif*; ava/pva *miʕannif*.

اتعنف *ʃitʕannif* /vi/ to be severely rebuked. - iva *mitʕannif*.

ع ن ق

عنق *ʕinq* /n/ neck. *ḍarab-u f-ʕinq-u b-sikkiina* he stabbed him in the neck with a knife. *gat-ak wagaʕ ʕinq-ak [abus]* may your neck hurt! ‖*ʕalee ʕinq*^{i} *raqaba* ≈ he has a neck like an ox. - *ʕinq*^{i} *ʕinab* a bunch of grapes. - *ʕinq iz-zirr* small protruding piece of felt to which the tassel is sewn on a fez.

عنق *ʕunuq*$^{\uparrow}$ /n pl *ʃaʕnaaq*/ neck. ‖*ʕunuq ir-raḥim [anat]* the cervix.

عانق *ʕaaniq* /vt/ to embrace, clasp. - ava/pva *miʕaaniq*.

اتعانق *ʃitʕaaniq* /vi/ **1** to embrace one another. **2** to be embraced. - ava/iva *mitʕaaniq*.

ع ن ق ا ف

عنقافة *ʕinqaafa* /n pl *-aat*/ **1** neck. *ʕafaq-u min ʕinqaafit hiduum-u* he grabbed hold of him by the collar of his clothes. **2** neck-pad (of a yoke).

ع ن ق و د

عنقود *ʕanquud* /n pl *ʕanaqiid*/ bunch, cluster. *ʕanaqiid*

ʕinab bunches of grapes. ‖ ʃaaxir il-ʕanquud the last child born to a couple. ʃaaxir il-ʕanquud sukkar maʕquud [prov] (the youngest child is like concentrated sugar) ≈ the youngest child is the darling of his parents.

(ع ن ك ب)

عنكب ʕankab (also ʕankab ʃidd' wi-rkab) /n/ a game in which a child mounted on another's shoulders tries (by kicking) to topple others similarly mounted.

عنكبوت ʕankabuut /n pl -aat/ spider. beet il-ʕankabuut spider's web.

ع ن و [1]

عنوة ʕinwa /n/ force, violence, constraint.

¶ ʕinwatan /adv/ by force.

ع ن و [2] see ع ن ى : maʕnawi

ع ن و ن

عنوان ʕinwaan (also ʕilwaan↓) /n pl ʕanawiin/ **1** address. ʃil-gawaab yinʕirif min ʕinwaan-u [prov] ≈ you can tell a book by its cover. **2a** title (of a book). **2b** caption (under a picture). **2c** headline.

عنون ʕanwin /vt/ **1** to address. miʃ ḥa-tʕanwin ig-gawaab aren't you going to address the letter? **2** to entitle. ʕanwin ik-karikateer bi-duun taʕliiq he captioned the cartoon 'No comment'. - vn ʕanwana; ava/pva miʕanwin.

اتعنون ʃitʕanwin /vi/ **1** to be addressed. **2** to be entitled. - iva mitʕanwin.

ع ن ى

عنى ʕana↑ (i) /vt/ to mean. yaʕni ʃeeh what does it mean? ma-ʃaʕnii-ʃ ḥadd' biz-zaat I don't mean to refer to any one in particular. - ava ʕaani; pva maʕni.

يعنى yaʕni particle signalling **1** the giving or requesting of clarification ≈ that's to say, that is, does that mean then (in a question). ʃaawir ʕala buqq-u yaʕni raayiḥ yitʁadda he gestured to his mouth, meaning (that he was) going to lunch. bi-ʃizn ıllaah yaʕni God permitting, that is. yaʕni ḥa-taaxud il-ʃutubiis you'll take the bus, then? ‖ wi-ʃeeh yaʕni so what! as ın ʃatamt ıl-mudiir - wi-ʃeeh yaʕni so I insulted the manager - so what! **2** attempted clarification, when the speaker is groping for words ≈ y'know. bass' yaʕni kunt[a] ʕaawiz ʃasʃal-ak suʃaal but, y'know, I wanted to ask you a question. **3** a noncommittal response with implied reservation ≈ so-so, sort of. ʃinta mabsuuṭ hina - yaʕni 'Are you content here?' 'So-so.'

عناية ʕınaaya /n/ care, compassionate concern. ʃıl-ʕinaaya biṭ-ṭifl baby care. bi-faḍl' ʕnayt-ak thanks to your care. baṣṣ-i-li b-ʕeen il-ʕinaaya he looked at me compassionately.

معنى maʕna (also maʕnit↓ ın constr) /n pl maʕaani/ meaning, significance. maʕnaa-ha (or maʕnit-ha) ʃeeh di what does this mean? ʃıd-dimuuʕ di maʕnaa-ha (or maʕnit-ha) ʃinnık xayfa these tears mean that you're afraid. ‖ bı-maʕna ʃinn↑ which is to say that, as in bi-maʕna ʃinn' ʃıza ma-get-ʃ is-saaʕa sabʕa tiqdar tirawwaḥ in other words, if I don't come at seven, you can go home. - bi-maʕna ʃaaxar in other words. - bi-maʕna k-kılma in the full meaning of the word, as in da raagil bi-maʕna k-kilma he's a real man. - bi-maʕna ʃaṣaḥḥ more correctly.

¶ ʃil-laa-maʕna meaninglessness.

معنى maʕni /adj */ involved, concerned, relevant. ʃig-gıhaat ıl-maʕniyya the authorities concerned.

معنوى maʕnawi /adj/ ideational, abstract. ‖ rooḥ maʕnawiyya morale, spirit. - faxṣ' maʕnawi [leg] artificial or juristic person.

تعنية taʕnıyya, taʕniya /n/ [path] tenesmus.

اتعنى ʃitʕanna /vi/ to suffer from tenesmus. - vn taʕniyya, taʕnıya; ava mitʕanni.

عانى ʕaana /vi/ to suffer, feel distress. ʃil-mugtamaʕ bi-yʕaanı min takaddus ʃafraad-u society is suffering because of the rise in population. - vn muʕanaah; ava mıʕaanı.

اعتنى ʃıʕtana /vi/ to take care, pay attention. laazim ninaqqii-ha w-niʕtini bi-xtıyar-ha we have to pick them out one by one and be very careful which we choose. ʃiʕtini bil-qahwa be sure you make the coffee properly! - vn ʃiʕtina; ava miʕtını.

استعنى ʃistaʕna (yistaʕna) /vi/ to care, show interest or concern. fii duktoor tilaaqii ma-yistʕnaa-ʃ you sometimes meet doctors who don't give a damn. ma-yistaʕnaa-ʃ yibuṣṣ' f-xilqit-ha he wouldn't condescend to look at the likes of her. ‖ qillit istiʕna a devil-may-care attitude. - vn ʃıstiʕna: ava mistaʕni.

ع ه د

عهد ʕahd /n pl ʕuhuud/ **1** era, age. fi-ʕahd' ʃaadam in the days of Adam. ‖ min ʕahd' qurayyib recently. **2** covenant, pact. ‖ ʃil-ʕahd il-qadiim the Old Testament. - ʃil-ʕahd ig-gidıd the New Testament. - xamiis il-ʕahd [Chr] Maundy Thursday. - waaxid ʕahd[a] ʕala nafs-u he has committed himself. - waaxid ʕahd he has vowed allegiance to a leader of a Sufi order.

عهدة ʕuhda /n/ **1** custody, charge, responsibility. bi-yḥuṭṭ il-ʕarabiyya f-ʕuhdit-i he puts the car in my

charge. **2** /pl *ʕuhad*/ (item of) property in the charge of an official for which he must account on relinquishing his position.

معهد *maʕhad* /n pl *maʕaahid*/ institute. *ʔil-maʕhad il-ʕaali lit-tarbiya r-riyaḍiyya* the Higher Institute for Athletic Training.

اتعهّد *ʔitʕahhid* /vt/ to undertake, contract. *ʔitʕahhidt^{i} (ʔinni) ʔaraggaʕ-lu l-ʕarabiyya s-saaʕa talaata* I undertook to return the car to him at three. - vn *taʕahhud*; ava *mitʕahhid*.

تعهّد *taʕahhud* /n pl *-aat*/ formal undertaking, pledge. *naaxud ʕalee taʕahhud* we get a formal undertaking from him.

متعهّد *mutaʕahhid* /n */ one contracted to supply specific items.

معاهدة *muʕahda* /n pl *-aat*/ treaty, convention.

اتعاهد *ʔitʕaahid* /vi/ to come to an agreement, make a pact. *ʔitʕahdu ma-yxunuu-ʃ baʕḍ* they agreed not to betray one another. - ava *mitʕaahid*.

ع و ا ف see ع ف ى : *ʕawaaf, ʕawaafi, ʔil-ʕawaafi*

ع و ج

عوج *ʕawag (i)* /vt/ **1** to make crooked, twist, bend. *tuql ik-kutub ʕawag rigl iṭ-ṭarabeeza* the weight of the books bent the table leg. *ʔil-ʔaks^{i} maʕwuug* the axle is bent. ‖ *ʔil-maʕwuug yistaʕdil ʕas-sindaal [prov]* (the crooked may be straightened on the anvil) ≈ nothing is so bad it cannot be set right. **2** to set crookedly, tip, tilt. *ʕaawig ṭarbuuʃ-u* wearing his fez at a jaunty angle. - vn *ʕawag, ʕawga, ʕawagaan*; ava *ʕaawig*; pva *maʕwuug*.

معوج *maʕwuug* /adj */ **1** crooked, bent, twisted. *ʔinti labsa l-burneeṭa maʕwuuga* you're wearing the hat crooked. ‖ *ʔinta maʕwuug ʕala ʔeeh* why are you so conceited. **2** loose, immoral. *bint^{i} maʕwuuga* a loose girl.

أعوج *ʔaʕwag* /adj, fem *ʕooga*, pl *ʕuug*/ **1** crooked, twisted, bent. ‖ *ʔil-bint^{a} ḥal-ha ʔaʕwag* (1) she's a loose girl. (2) the girl has bad luck. **2** immoral. *taṣarrufaat ʕooga* crooked behaviour. - /adverbially/ *mifi ʔaʕwag* to behave immorally.

عويجة *ʕiweega: dura ʕweega* sorghum, Indian millet (Andropogon sorghum).

اتعوج *ʔitʕawag* /vi/ **1** to be made crooked, twisted or bent. **2** to be set crookedly, be tilted. **3** to be offended. *ʔinta mitʕiwig minni leeh* why do you have this standoffish attitude towards me. - ava/iva *mitʕiwig*.

انعوج *ʔinʕawag* = *ʔitʕawag*. - iva *minʕiwig*.

معوّج *miʕawwig* /adj/ crooked or twisted or bent in several places.

اتعوّج *ʔitʕawwig* /vi/ to be made crooked, be bent, be twisted (in several places, or several times). *ʔil-ʕaḍiib itʕawwig* the bar buckled. ‖ *ma-lha maʃya b-titʕawwig kida* what makes her walk so provocatively? why does she wiggle herself about like that? - *bi-titʕawwig fi-kalam-ha* she talks in a coquettish and provocative way. - iva *mitʕawwig*.

ع و د

عاد *ʕaad^{1} (u)* /vt/ **1** to cause (times, conditions) to be repeated (of God). *rabb-i-na yʕud-ha ʕaleekum bi-xeer* may Our Lord bring back (these happy days) to you with bounty! (response to *bi-ʕooda*). — /vi/ **2a** to recur (of times, conditions). ‖ *bi-ʕooda* or *bi-ʕoodit il-ʔayyaam* may it (or the days) be repeated! many happy returns! (a felicitation given on any happy occasion). **2 b**↑ to return (of people). *ḥa-nʕuud fi-nuṣṣ il-leel* we'll return at midnight. **3** /w neg/ to continue, remain. *ʔin-naas ma-ʕad-ʃ^{i} fiihum xeer* there's no longer any good in people. *ma-ʕad-lak-ʃ^{i} ḥigga* you have no argument left. *ma-ʕudt^{i}-ʃ faaḍi* I no longer have any free time. **4** /preverb/ **4a** /w neg/ to continue to. *ʔil-beet ma-ʕad-ʃ^{i} ysaʕ-na* the house is no longer large enough for us. *miʃ ḥa-yʕuud yiṣlaḥ lif-fuṷl* it won't be fit for work any more. **4b** to start (again) to. *kull^{i} ma yifrigu ʕannu yʕuud yisraq taani* every time they release him he goes back to stealing. *kull^{i} ma yxiff^{i} yʕuud yiʕya taani* whenever he gets well he falls sick again. *law ʕudt atʕaamil bif-fikaat taani* if I ever dealt with cheques again .... ‖ *ma-ʕudt^{i}-ʃ ʔaqul-ha* (also *ma-ʕunt^{i}-ʃ ʔaqul-ha*) I won't say it again! - *ʔin ʕudt^{i} tʕuud ḥuṭṭ^{i} fiiha ʕuud* ≈ (let me off this time but) if I ever do it again you can punish me any way you like. - vn *ʕawda, ʕooda, ʕawadaan*; ava *ʕaayid*.

¶ *ʕaad ʕala* to bring returns, reflect upon. *ʔil-xusaara ḥa-tʕuud ʕaleena kull-i-na* the loss will touch us all. *ḥa-yʕuud ʕaleena bil-fayda* it will benefit us. *ʔil-ḥikaaya di miʃ ḥa-tʕuud ʕaleena ɤeer bit-taʕab* this affair will bring us nothing but trouble.

عاد *ʕaad^{2} (i)* /vt/ to redo, do again. *ʔil-muhandis yiʕiid it-tasgiil* the engineer does the recording again. *xalleet-u yʕiid kull it-tamariin* I made him do all the exercises again. *laazim ʔaʕiid is-sana* I'll have to repeat the year (at school or university). - vn *ʕiyaada*; ava *ʕaayid*.

¶ *ʕaad ʕala* to go over again. *ʕiid ʕal-xiyaaṭa bil-makana* go over the stitching by machine.

عودة *ʕawda* /n/ return. *tazkara zihaab wi-ʕawda* return ticket, round-trip ticket. ‖ *ʕawdit ir-rooḥ* reincarnation. - *nuqṭit il-la-ʕawda* the point of no return.

عودة *ʕooda* /n/ return. ‖ *bi-ʕooda* or *bi-ʕoodit il-*

ʔayyaam may it (or the days) be repeated! (a felicitation given on any happy occasion).

عائد ʕaaʔid, ʕaayid /n/ (financial) return, take. ʕaaʔid il-muʔallif the author's royalties. ʕawaaʔid in-naft oil revenues.

عوايد، عوائد ʕawaayid /pl n/ rates, taxes assessed on property for local purposes.

عادة ʕaada[2] /n/ **1** /pl -aat, ʕawaayid/ **1a** habit, usual practice. kasal-ha baqa ʕaada her laziness became a habit. di miʃ ʕawayd-u that's not his usual behaviour. zayy il-ʕaada as usual. ‖fil-ʕaada usually. - ʔil-ʕaada s-sirriyya *[euphem]* masturbation. **1b** custom, tradition. ʕadaat maṣriyya Egyptian customs. **2** ʔil-ʕaada the monthly period, the menses. ʕaleeha l-ʕaada she's having her period. **3** ʔil-ʕaada the simplest form of Egyptian backgammon. — /adj invar/ **4** standard, made to standard specifications. zeet ʕaada standard oil. muftaaḥ ʕaada a standard switch. ʕaawiz birwaaz midahhab walla ʕaada do you want a gilt or a standard frame?

¶ ʕaadatan /adv/ usually, ordinarily. ʕaadatan bi-yilbis banṭaloon he usually wears trousers.

عادى ʕaadi /adj */ ordinary, normal. waraq ʕaadi ordinary paper. - /adverbially/ ruḥt if-fuvl[a] ʕaadi I went to work as usual. ʔis-sittaat bi-yilbisu ʕaadi the women wear ordinary clothes.

عود ʕuud /n pl ʕidaan, ʔaʕwaad/ **1** rod, stick, pole, beam. ʕuud kabriit match-stick. ʕuuḍ miqaʃʃa broom-handle. ʕuud faduuf rocker beam of a shadoof. ʕidaan markib ribs of a boat. **2** stalk, stem. bi-niqṭaʕ ik-kizaan mil-ʕuud we cut the ears from the stalk. ʕuud quṭn a (single) cotton plant. ‖ ʔixḍarr' ʕud-ha ≈ she blossomed. - ʕuud fi-ḥiżma ≈ a drop in the ocean. - ʕuud iṣ-ṣaliib *[Chr]* the cross (of Christ). **3** musical instrument related to the lute, oud (see Pl.J, 7). — /no pl/ **4** aloes wood.

عيد ʕiid /n pl ʔaʕyaad/ feast, festival. ʕiid milaad birthday. ‖ ʔil-ʕiid iṣ-ṣuvayyar (1) *[Isl]* Lesser Bairam, three-day festival marking the end of the Ramadan fast, starting on the first day of Shawwal. (2) *[Chr]* Christmas. - ʔil-ʕiid ik-kibiir (1) *[Isl]* Greater Bairam, four-day festival starting on the tenth day of Zu l-Higga marking the completion of the essential rites of pilgrimage to Mecca. (2) *[Chr]* Easter. - ʕiid il-ʔumm Mother's Day.

عيديّة ʕidiyya /n pl -aat/ present (of money) given at an annually celebrated feast or festival.

عيادة ʕiyaada, ʕiyyaada /n pl -aat/ outpatient clinic, doctor's surgery.

عوّاد ʕawwaad /n */ oud player.

اتعاد ʔitʕaad /vi/ to be done again, be done another time, be repeated. ʔil-imtiḥaan ḥa-yitʕaad min taani the exam will be done over again. xiṭṭa mubtakra la tʕaadit wala nkaʃafit an original plan that has never been done before or thought of. ʔilli ḥaṣal la yitʕaal wala yitʕaad what happened (is so improper that it) is not to be mentioned or repeated. - iva mitʕaad.

انعاد ʔinʕaad = ʔitʕaad. - iva minʕaad.

عوّد ʕawwid **1** /vt/ to accustom. laazim tiʕawwid iṭ-ṭifl[a] ʕala ʔinnu yilʕab li-waḥd-u you have to get the child used to playing on his own. ʕawwidnaa ʕala f-fuvl we got him accustomed to the job. **2** /vi/ to return, go back. ḥa-yʕawwid min feen by which route will he return? - vn taʕwiid; ava/pva miʕawwid.

عيّد ʕayyid /vi/ **1** to celebrate a ʕiid. leeh ʕayyidt' l-waḥd-ak why did you spend the festival by yourself? **2** to give a festive greeting. ʔin-naas ʕayyidit ʕala baʕḍ (1) the people gave one another festive greetings. (2) the people visited each other on the occasion of the feast. - vn taʕyiid; ava miʕayyid.

اتعوّد ʔitʕawwid /vt and vi/ to become accustomed (to). ʔana tʕawwidt[a] (ʕala) l-wiḥda I've got used to being alone. - vn taʕawwud↑; ava mitʕawwid.

اتعيّد ʔitʕayyid /vi/ (impersonal) passive of ʕayyid. dool naas yitʕayyid maʕaahum is this the sort of people one spends a feast with? - iva mitʕayyid.

عاود ʕaawid **1** /vi/ to recur (of an illness). ʕaawid ʕalayya l-mavaṣ I had a recurrence of the colic. **2** /vt/ to start (doing s.th.) again. baʕdeen yiʕaawid ir-raami ḥaʃw il-bunduqiyya then the marksman reloads the rifle. - vn miʕawda; ava miʕaawid.

معايدة muʕayda /n pl -aat/ festival greetings. kart' mʕayda greetings card.

أعاد ʔaʕaad↑ /vt/ **1** to cause (times, conditions) to be repeated (of God). **2** to re-do, do again. - vn ʔiʕaada/ ava muʕiid.

أعد ʔaʕid /interj/ encore!

إعادة ʔiʕaada /n/ repetition. ‖ ʔiʕaadit ... re- (in compounds), as in ʔiʕaadit naẓar reconsideration. ʔiʕaadit xarṭ relathing.

معيد muʕiid /n */ *[acad]* demonstrator, teaching assistant.

اعتاد ʔiʕtaad /vi/ to become accustomed. ʔiʕtaad yizur-na yawmiyyan he grew accustomed to visiting us daily. - vn ʔiʕtiyaad; ava miʕtaad.

اعتيادى ʔiʕtiyaadi /adj/ normal, customary.

معتاد muʕtaad adj */ accustomed to, in the habit of (doing s.th.). hiyya muʕtaada tiʕmil ḥafla ʕala raas is-sana she's in the habit of giving a New Year's party.

¶ *muʕtaadan* /interj/: *muʕtaadan marʃ [mil]* ready, march!

ع و ذ see ² ع و ز

¹ ع و ر

عور *ʕiwir (a)* /vi/ to lose an eye, lose the sight of one eye. - vn *ʕawar*.

عور *ʕawar (i)* /vt/ to cause to lose an eye. *ʤarab-u ʕawar-u* or (*ʕawar ʕeen-u*) he hit him and put out his eye. - vn *ʕawaraan*; ava *ʕaawir*; pva *maʕwuur*.

أعور *ʔaʕwar* /adj, fem *ʕoora*, pl *ʕuur*/ one-eyed. *yiquul lil-ʔaʕwar ʔaʕwar fi-ʕeen-u [prov]* ≈ to tell the plain truth, call a spade a spade. ‖*muʃraan ʔaʕwar* (vermiform) appendix (of the caecum). - *ʔitneen ʕuur* (1) throw in the game of *ʧaab* (q.v.) that neither wins nor loses. (2) a neutral action, an action without effect on an outcome.

عوّر *ʕawwar* /vt/ to injure, damage. - vn *taʕwiir*; ava/ pva *miʕawwar*.

تعويرة *taʕwiira* /inst n, pl *-aat*/ a wound, an injury.

اتعوّر *ʔitʕawwar* /vi/ to be injured, be damaged. - iva *mitʕawwar*.

اعوّر *ʔiʕwarr* /vi/ to lose an eye, lose the sight of one eye. - ava *miʕwirr*.

² ع و ر see also ¹ ع ى ر

عورة *ʕawra* /n pl *-aat*/ **1** *[Isl]* part of the body which must be covered during prayer. **2** genitals, pudenda. **3** shameful thing.

¹ ع و ز

عاز *ʕaaz (u)* /vt/ **1a** to want, desire. *ʕaaz xamsa saar ʔiddet-haa-lu* he wanted five piastres, (so) I gave it to him. *ʔis-sitt[a] ʕawzaa-ki f-kilmiteen* the lady would like a word with you. **1b** /preverb/ to want to. *lamma ʔaʕuuz ʔaḥlaq daqn-i ʔaruuḥ lil-ḥallaaq* when I want to get a shave, I go to the barber. **2a** to require, need. *ʔis-sibaaḥa bi-tʕuuz ʃiddit il-gism* swimming requires bodily strength. *ʔil-kawitʃ[a] ʕaayiz liḥaam* the tyre needs mending. ‖ *ʔil-ʕaayiz ʔahbal* ≈ necessity knows no law. **2b** /preverb/ to need to. *ʔil-ʕarabiyya tʕuuz titmawwin* the car needs filling up. - vn *ʕooza, ʕaaza*; ava *ʕaawiz, ʕaayiz*.

عوزة *ʕooza* /n/ want, need. *waqt il-ʕooza* in time of need, when necessary.

عازة *ʕaaza* /n/ want, need. *ma-luu-ʃ ʕaaza* it is not needed.

عايز، عاوز *ʕaayiz* or *ʕaawiz* /fem *ʕayza, ʕawza*, pl *ʕayziin, ʕawziin*/ **1** modal of desire. *ʔil-mudiir ʕaayiz yikallim-ak* the director wants to speak with you. **2** modal of necessity. *ʔil-ʕarabiyya ʕayza titṣallaḥ* the car needs to be repaired.

² ع و ز

أعوذ *ʔaʕuuzu: ʔaʕuuzu bi-llaah* (I seek refuge with God!) ≈ God protect us! Heaven help us! *ḥamaat-i gayya tzur-na. - ʔaʕuuzu bi-llaah* 'My mother-in-law is coming to see us.' 'Heaven help us!'

العياذ *ʔil-ʕiyaazu: ʔil-ʕiyaazu bi-llaah* (refuge is with God!) ≈ God protect us! Heaven help us! *ʔit-tadxiin bi-ygiib - wil-ʕiyaazu bi-llaah - saraṭaan* smoking, God protect us, causes cancer.

استعاذ *ʔistaʕaaz* /vi/ to seek refuge (in God). *ʔistaʕaaz bi-llaah* to say *ʔaʕuuzu bi-llaah*. - vn *ʔistiʕaaza*; ava *mistiʕiiz*.

¹ ع و ص

عاص *ʕaaṣ (u)* /vt/ to smear. *ʕaṣuu-li ʔiday-ya ḥibr[i] w-xatamuu-hum ʕala waraʕa* they smeared my hands with ink and took their impression on a piece of paper. - vn *ʕooṣ*; ava *ʕaayiṣ*.

اتعاص *ʔitʕaaṣ* /vi/ to be smeared. - iva *mitʕaaṣ*.

انعاص *ʔinʕaaṣ* = *ʔitʕaaṣ*. - iva *minʕaaṣ*.

² ع و ص

عويص *ʕawiiṣ* /adj */ difficult. *muʃkila ʕawiiṣa* a difficult problem.

ع و ض

عوض *ʕawaḍ* /n/ **1** substitute, compensation. *ʔil-ʕawaḍ ʕala l-mawla* or *ʕaleeh il-ʕawaḍ wi-minnu l-ʕawaḍ* or *ʕaleek il-ʕawaḍ ya rabb* ≈ God will provide (said upon suffering loss). ‖*ʕaleena l-ʕawaḍ* ≈ we're done for! **2**↓ offspring, children.

عواض *ʕuwaaḍ* /prep/ instead of, in place of, as a substitute for. *ʕuwaaḍak* in your place. *xud da ʕuwaaḍ da* take this instead of that.

¶ *ʕuwaaḍ ma* /conj/ instead of (doing s.th.).

عوّض *ʕawwaḍ* /vt/ **1** to compensate (s.o.). *ʔil-ḥukuuma ʕawwaḍit-hum ʕal-ʔarḍ illi xadit-ha* the government compensated them for the land it took. **2** to compensate for (s.th.), make up for (s.th.). *laazim tiʕawwaḍ illi faat* you have to make up for the past. *ʔinta b-tigri leeh - ʕaawiz tiʕawwaḍ iʃ-ʃiwayya lli wqift-u-hum* why are you going so fast? do you want to make up for the little while when you stopped? ‖ *ʔallaah yiʕawwaḍ (ʕaleek)* may God make (it) up (to you)! (to one who has lost money or the like). - *ḥ-aʕawwaḍ-haa-lak bukra*

I'll get my own back on you later! - vn *taʕwiiq*; ava *miʕawwaq*.

تعويض *taʕwiiq* /n pl *-aat*/ compensation, indemnity.

تعويضى *taʕwiiqi* /adj/ substitute. ‖ *ʕaghiza taʕwiqiyya* artificial limbs.

اتعوّض *ʔitʕawwaq* /vi/ to be compensated for, be made up for. *saaʕit il-ḥazzˈ ma-titʕawwaq-ʃ* a moment of pleasure (lost) cannot be replaced. - iva *mitʕawwaq*.

استعوض *ʔistaʕwaq* /vt/ to obtain a substitute for (s.th.). *b-aqdar ʕastaʕwaq-u mil-maxzan* I can replace it from the store. ‖ *ʔistaʕwaq-u ʕand allaah* he wrote it off as a dead loss. - vn *ʔistiʕwaaq*; ava *mistaʕwaq*.

[1] ع و ف

عوف *ʕoof* /prop n/: *ʕabu ʕoof* nickname for *ʕabd ir-raḥmaan*.

[2] ع و ف see ع ف ى: *ʕawaaf, ʕawaafi*

[1] ع و ق

عاق *ʕaaq (u)* /vt/ to hamper, impede.

عائق *ʕaaʔiqˀ* /n pl *ʕawaaʔiq*/ obstacle, hindrance.

عاقة *ʕaaqa* /n pl *-aat*/ impediment (especially one preventing childbirth). *rabb-i-na yfukkʷ ʕaqit-ha* may God grant her a child!

عوّق *ʕawwaq* **1** /vt/ to delay, hold up. **2** /vi/ to dawdle, delay, be late. *ma-tʕawwaq-ʃˈ fiṭ-ṭariiq* don't dawdle on the way! - vn *taʕwiiq*; ava/pva *miʕawwaq*.

معوّقات *muʕawwiqaatˀ* /pl n/ hindrances, impediments.

اتعوّق *ʔitʕawwaq* /vi/ to be made late, be held up. *laazim itʕawwaqit fiṭ-ṭariiq* something must have delayed her on the way. *ʔil-wilaada tʕawwaqit* the birth was delayed. ‖ *miraat-i mitʕawwaqa* my wife is late in giving birth. - iva *mitʕawwaq*.

استعوق *ʔistaʕwaq* /vt/ **1** to consider (too) late. *ʔistaʕwaqt-ak rawwaḥt* when I felt I'd waited for you long enough I went home. **2** to make (s.o. who is late) hurry up. *ruuḥ istaʕwaq-u* go and call him (he's been too long). - vn *ʔistiʕwaaq*; ava/pva *mistaʕwaq*.

[2] ع و ق

عوّاقة *ʕawwaaqa* /n pl *-aat, ʕawawiiq*/ small mattock.

ع و ل

عال *ʕaal[2] (u)* /vt/ to support, provide for (one's family). - ava *ʕaaʔil*.

عالة *ʕaala* /n/ sponger, parasite.

عايلة، عيلة *ʕeela, ʕaaʔilaˀ* /n pl *-aat*/ family.

عائلى *ʕaaʔili* /adj/ pertaining to the family, familial, domestic. *biṭaaqa ʕaaʔiliyya* family identity card. *liʕba ʕaaʔiliyya* a game suitable for the home. *ʕandu ʕuzrʷ ʕaaʔili* he's tied up at home.

عيّل *ʕayyil* /n pl *ʕiyaal*/ child. ‖ *bitaaʕ ʕiyaal* pederast. - /adjectivally/ *raagil ʕayyil* a childish man.

عيالى *ʕiyaali* /adj/ childish.

عوالة *ʕiwaala* /adv/ parasitically. *ʔintu ʕayfiin ʕiwaala ʕala miin* who are you sponging on?

عويل *ʕawiil* **1** /adj pl *ʕiwala*/ lazy and incompetent. **2** /n/ *[naut]* rope by which a lateen sail is furled against the mast.

استعول *ʔistaʕwil* /vt/ to consider lazy or incompetent. *ʔistaʕwiluu-k wi-xadu l-filuus minnak* they took advantage of your simplicity and appropriated the money. - vn *ʔistiʕwaal*; ava *mistaʕwil*.

ع و ل ق see also ع ل ق

اتعولق *ʔitʕoolaq* /vt/ **1** to behave promiscuously, be of easy virtue. **2** to behave saucily or provocatively. - ava *mitʕoolaq*.

[1] ع و م

عام *ʕaam[2] (u)* /vi/ **1a** to swim. *tiʕraf tiʕuum* do you know how to swim? ‖ *ʕaam ʕala ʕoom* ... to string along with (s.o. usually in suspect behaviour), as in *bi-tʕuum ʕala ʕoom-u* she supports him indiscriminately, *ma-tʕum-ʃˈ ʕala ʕom-hum* go your own way, don't follow in their footsteps. **1b** to float. *ʕaayim maʕa l-mayya* drifting with the current. **2** to overflow. *ʔit-tirʕa ʕaamit ʁarraqit id-dinya* the canal overflowed and flooded everything. *ʔiṣ-ṣafiiḥa ʕayma zeet* the can is brimful of oil. - vn *ʕoom, ʕawaamaan*; ava *ʕaayim*.

عوم *ʕoom* /n/ **1** swimming. **2** *ʕoom il-baḥr [naut]* water-line.

عايم *ʕaayim* /adj */ extra, surplus, hanging loose.

عوّام *ʕawwaam* /adj */ expert at swimming. ‖ *ʔibn il-wizzʷ ʕawwaam [prov]* (the son of geese swims well) ≈ like father, like son.

عوّامة *ʕawwaama* /n pl *-aat*/ **1** float. *ʔil-ʕawwaama btaaʕit is-sifoon* the lavatory cistern float. **2** inflatable ring or other buoyant swimming aid. **3** buoy. **4** houseboat.

عوّيم *ʕawwiim* /adj pl *ʕawwiima*/ expert at swimming.

عوّم *ʕawwim* /vt/ **1** to float, cause to float. *bi-yʕawwim markib-u fil-banyu* he sails his boat in the bath tub. **2** to flood, drench. *lamma ʔaagi ʔamsaḥ b-aʕawwim if-faqqa mayya* when I wash the floor I have the flat swimming with water. **3** *[naut]* to hoist (a sail). **4** *[finan]* to float (a currency). - vn *taʕwiim*; ava/pva *miʕawwim*.

اتعوّم ʔitʕawwim /vi/ passive of ʕawwim. -iva mitʕawwim.

[2] ع و م
عام ʕaam [3] /n pl ʔaʕwaam/ year. kull[a] ʕaam wi-nta (or wi-ntu) b-xeer may you be well every year! (conventional greeting on the occasion of any annual happy event). kull[a] ʕaam wi-nta (or wi-ntu) hina may you be here every year (to enjoy this happy occasion)!

[1] ع و ن
عان ʕaan[1] (i) /vt/ to come to the help of, side with. gibt-ak ya ʕabd il-muʕiin tiʕin-ni - laqeet-ak ya ʕabd il-muʕiin tiʕaan [prov] I brought you, Abd al-Mu'in, to help me; I found, Abd al-Mu'in, that it was you that had to be helped. -vn ʕoon; ava ʕaayin.
عون ʕoon[1] /n/ help, assistance. ‖ ʔallaah yikuun fi-ʕoon-ak may God help you! (expression of sympathy).
أعوان ʔaʕwaan /pl n/ assistants, helpers. ‖ ʔaʕwaan sufliyya [magic] spirits involved in magic.
عانة ʕaana /n pl ʕuun/ pubic hair.
معونه maʕuuna /n/ aid, relief. maʕuuna min ʔamriika aid from America.
اتعان ʔitʕaan[1] /vi/ to be helped, be assisted. -iva mitʕaan.
انعان ʔinʕaan[1] = ʔitʕaan[1]. -iva minʕaan.
عاون ʕaawin /vt/ to help, assist. fii naas mumkin tiʕawn-u there are people who can help him. -vn miʕawna, muʕawna; ava/pva miʕaawin.
معاون miʕaawin /n */ assistant (in an official capacity). miʕaawin in-niyaaba assistant prosecutor. miʕaawin il-kulliyya university administrator responsible for custodial and classroom services. miʕaawin il-masraḥ stage-hand. miʕaawin maḥaṭṭa railway station traffic controller. miʕaawin iṣ-ṣiḥḥa area assistant health officer.
اتعاون ʔitʕaawin /vi/ to co-operate. -vn taʕaawun; ava mitʕaawin.
تعاونى taʕaawuni /adj/ pertaining to co-operation. gamʕiyya taʕawniyya government-owned foodstore.
أعان ʔaʕaan = ʕaan[1]. -vn ʔiʕaana; ava muʕiin; pva muʕaan.
إعانه ʔiʕaana /n pl -aat/ subsidy.
معين muʕiin /n/ Helper (epithet of God). ʕabd il-muʕiin see ʕaan[1].
استعان ʔistaʕaan (yistiʕiin, yastaʕiin, yistaʕaan↓) /vi/ 1 to seek assistance. ʔistaʕaanit big-giraan she asked the neighbours to help. nistaʕaan ʕaʃ-ʃaqa bi-llaah we pray to God for his assistance in dealing with the hard toil ahead of us (used, often jocularly, when beginning work). 2 to make use (of s.th.). ʔil-ʔalaat illi b-yistiʕiin biiha ṣ-ṣanayʕi the tools the craftsman employs. -vn ʔistiʕaana; ava mistiʕiin.

[2] (ع و ن)
عون ʕoon[2] /n/ giant.
عنت ʕunt: ma-ʕunt[i]-ʃ, ma-ʕuntii-ʃ, ma-ʕuntuu-ʃ I (you) would never ... again. cf. ʕaad[1] 4b.

[3] ع و ن see م ع ن: maʕuun

ع و و
العوّة ʔil-ʕawwa for nawwit il-ʕawwa and nawwit baaqi l-ʕawwa see nawwa.

ع و ى
عوى ʕawa (i) /vi/ to bark (of a dog), howl (of a wolf). -vn ʕiwa; ava ʕaawi.
عوّى ʕawwa /vi/ intensive form of ʕawa. -ava miʕawwi.

ع و ى ش
عويشة ʕaweeʃa /prop n/ name of a demon, said to be of Moroccan origin, invoked in zaar rituals.

ع ى ب
عاب ʕaab (i) 1 /vt/ to attach blame or inadequacy to. ʔaẓunn[i] baʕd[i] kida ma-ḥadd[i]-ʃ yiqdar yiʕib-ni f-ḥaaga I think that after this nobody should be able to attach any blame to me. 2 /vi/ to err in personal matters. ʔil-ʔaṣiil ma-yʕib-ʃ the well-bred (person) never misbehaves. ʕaab fi- to insult, use bad language to, as in ʔibn-i muʔaddab wi-ma-yʕib-ʃ[i] f-ḥadd my son is well-mannered and never uses bad language to anyone. ʔil-ʕeeb fiz-zaat il-malakiyya [leg, obsol] insulting the King's name. ʕaab ʕala to criticize or attack (s.o.) for, as in ʕaab ʕalayya sakan-i fil-ḥayy[i] da he criticized me for living in that quarter. -vn ʕeeb, ʕayabaan; ava ʕaayib; pva maʕyuub.
عيب ʕeeb /n/ 1 shameful behaviour. ʔin-namiima miʃ ʕeeb bass[i] w-ḥaraam laakin daliil ʕala ʕaql[i] faaḍi scandal-mongering is not just shameful and forbidden by religion, but is also evidence of a fatuous mind. ‖ ʕeeb (1) that's naughty! (to a child). (2) (also ya ʕeeb) shame! for shame! -ya ʕeeb if-foom (1) shame, for shame! (2) oh what a pity! how awful! - ʕeeb ʕala shame on, as in ʕeeb ʕaleek tiʕmil kida shame on you for doing such a thing! 2 /pl ʕiyuub, ʕuyuub/ defect, fault, flaw. fii ʕiyuub fil-qumaaʃ there are faults in the cloth. ʕiyub-na fiina we all have our faults, none of us is perfect.

عيبة ʕeeba /n/ **1** a shameful act. *kida ʕandina ʃakbar ʕeeba* we consider this the most disgraceful thing. **2** bad word, bad language. *lisaan-u ma-yṭallaʕ-ʃ il-ʕeeba* he never uses bad language.

عايب ʕaayib[1] **1** /adj */ indecent, improper (in behaviour). *ʃaayib wi-ʕaayib* (old but still misbehaving) (epithet of) a dirty old man. **2** /n */ guilty party in a dispute. *miin fiikum ʕaayib* who among you is at fault?

معيوب maʕyuub /adj/ defective. *ʠuṭn' maʕyuub* defective cotton. *mara maʕyuuba* an immoral woman.

عيّب ʕayyib /vt/ **1** to find fault with, point out the faults of. *ʃil-muhandis ʕayyib kull iʃ-ʃuɣl illi ʕamalt-u* the engineer picked holes in everything I'd done. *ʃin kunt' ɣalṭaan ʕayyibuu-ni* if I'm at fault, tell me! **2** to spoil, render faulty. - vn *taʕyiib*; ava/pva *miʕayyib*.

¶ *ʕayyib ʕala* to hold up to scorn, hold in contempt. *ma-takul-ʃ' b-ʃiid-ak ʃaḥsan yiʕayyibu ʕaleek* don't eat with your hand or they'll be scornful. *bi-yʕayyibu ʕala lli faʕr-u-hum ṭawiil* they hold in contempt people who wear their hair long.

عايب ʕaayib[2] /vi/ to denounce as shameful. - vn *miʕayba*; ava *miʕaayib*.

ع ى د see ع و د: *ʕaad, ʕiid, ʕidiyya, ʕiyaada, ʕayyid, ʃitʕayyid, muʕayda, muʕiid, ʃiʕtiyaadi*

ع ى ر [1]

عار ʕaar[1] /n/ dishonour, disgrace. See further under ع و ر [2]

عيرة ʕiira /adj invar/ false. *sinaan ʕiira* false teeth. *faʕr' ʕiira↓* wig.

عيّر ʕayyar[1] /vt/ to taunt (s.o.) by mentioning (his) faults or failures. *ʕayyaruu bi-ʃinnu ʃibn[a] ʕabd iswid* they taunted him for being a black slave's son. - vn *taʕyiir*; ava/pva *miʕayyar*.

اتعيّر ʃitʕayyar[1] /vi/ passive of *ʕayyar*. - iva *mitʕayyar*.

عاير ʕaayir[1] /vt/ to shame (s.o.) by bringing up things to his discredit. ‖ *la tʕayir-ni wala ʃaʕayr-ak - ʃil-hamm' ṭayil-ni w-ṭayl-ak [prov]* ≈ don't bring things up against me and I won't against you - we both have our bad points. - vn *miʕayra*; ava/pva *miʕaayir*.

اتعاير ʃitʕaayir[1] /vi/ passive of *ʕaayir[1]*. - iva *mitʕaayir*.

ع ى ر [2]

عيار ʕiyaar /n pl *-aat, ʃaʕyira/* **1** fixed measure, portion. *ʃil-budra di b-niʕgin-ha bi-ʕyaraat* we mix this powder according to (fixed) measures. *dahab ʕiyaar tamantaafar* eighteen carat gold. ‖ *zawwid il-ʕiyaar ḥabbiteen* he overdid it a bit. **2** gauge, calibre. ‖ *ʕiyaar naari* (1) calibre (of a gun). (2) (rifle) shot. *ʃil-ʕiyaar illi ma-yṣib-f' yidwif [prov]* the shot that doesn't find its target will at least give a fright.

عيارى ʕiyaari /adj/ standard (in size, quality etc.).

معيار miʕyaar /n pl maʕayiir/ standard, norm.

عيّر ʕayyar[2] /vt/ to mark in graduations. *kizaan miʕayyara* graduated beakers. - vn *taʕyiir*; ava/pva *miʕayyar*.

اتعيّر ʃitʕayyar[2] /vi/ to be marked in graduations. - iva *mitʕayyar*.

عاير ʕaayir[2] /vt/ to measure out, gauge. *ʕayirt il-mayya bil-kubbaaya* I measured the water out by the glass. - vn *miʕayra*; ava/pva *miʕaayir*.

اتعاير ʃitʕaayir[2] /vi/ to be measured out, be gauged. - iva *mitʕaayir*.

ع ى ر [3]

عار ʕaar[2↓] *(i)* = *ʃaʕaar*.

أعار ʃaʕaar↑ /vt/ to second, send on secondment. *ʃaʕaruu-ni lil-xaarig* they sent me on secondment abroad. - /the literary passive occurs/ *ʃil-mudarris yuʕaar lit-tadriis fid-duwal il-ʕarabiyya* a teacher may be seconded to teach in the Arab states. - vn *ʃiʕaara*; ava *muʕiir*; pva *muʕaar*.

معار muʕaar↑ /adj/ out on loan. *ruṇt afattif ʕal-kitaab fil-maktaba laʠeet-u muʕaar* I went to look for the book in the library and found that it was out.

استعار ʃistaʕaar↑ /vt/ to borrow. *ʃistaʕart ik-kitaab min il-maktaba* I borrowed the book from the library. - vn *ʃistiʕaara*; ava *mustaʕiir*; pva *mustaʕaar*.

استعارة ʃistiʕaara /n pl *-aat/ [gram]* metaphor.

ع ى ر [4]

عير ʕiir↑ /n/ caravan. ‖ *la (luh) fil-ʕiir wala fin-nafiir* he has nothing to do with it.

ع ى ز [1] see ع و ز [1]: *ʕaayiz*

ع ى ز [2] see ع و ز [2]: *ʃil-ʕiyaazu*

ع ى س ا

عيسى ʕiisa /prop n/ **1** Jesus. **2** *[Isl]* male given name.

ع ى ش

عاش ʕaaf *(i)* /vi/ **1** to live. *ʕaaf faʠiir* he lived in poverty. *ʕana ʕiʃt' ṭuul ʕumr-i fi-skindiriyya* I've lived all my life in Alexandria. *di t-tigaara lli bi-yʕiif minha* this is the trade by which he lives. *ʕana b-aʕiif ʕala d-dawa da* I live on that medicine. *ʕaaf ʕala l-hawa* he led a very meagre existence. *ʃil-ʕiiʃa hina ṣaʕba* life is tough here. ‖ *tiʕiif* may you live long! (in reply to an expression of

thanks or a compliment). - *tiɛiif ʃinta* may you live long! (in reply to an enquiry after s.o. who, unknown to the enquirer, has died). - *tiɛiif wi-taaxud ɣer-ha* may you live to suffer again! (light-hearted consolation after a minor misfortune). - *tiɛiif wi-tgiib* may you live long to support us! (to the breadwinner of a family or anyone bringing a gift). - *tiɛiif wi-tiftikir* may you live long and remember! (expression of condolence to the bereaved on the occasion of an anniversary). - *ɛaaf min ʃaaf-ak* ≈ it's good to see you! (to s.o. one has not seen for a long time). - *yaɛiif* long live ...! as in *yaɛiif il-malik* long live the king! - *ʃilli yɛiif yaama yʃuuf [prov]* ≈ the longer you live the more you see, the world is full of wonders. **2** to spend all one's time. *ʃil-ɛiyaal fi-ʃagaaza w-ɛayʃiin fiʃ-ʃaariɛ* the kids are on holiday and spend all their time in the street. **3** to last, keep, stay fresh. *ʃil-qurunfil bi-yɛiif ɛan il-ward il-baladi* (cut) carnations last longer than (cut) roses. *ɛalaʃaan yiɛiif laazim tigiib-u ṣaabiḥ* if you want it to keep you have to buy it fresh. — /vt/ **4** to live through, experience. *ḥasseet bil-wiḥda lli ʃana ɛayiʃ-ha* I became aware of the lonely life I'm living. - vn *ɛiiʃa*; ava *ɛaayiʃ*.

عيشة *ɛiiʃa* /n/ a way of life, living. *ɣirift^{i} min ɛiʃt-i* I came to hate my way of life. *di ɛiiʃa tkaffar* this life is enough to make one renounce one's religion.

عايسة *ɛeeʃa* (also *ɛayʃa*) /prop n/ female given name. ‖*bint^{a} ɛeeʃa* type of small, sweet date. - *ɛeeʃa f-suuq il-ɣazl* ((a woman named) *ɛeeʃa* in the (crowded) yarn market) ≈ a needle in a haystack.

عيش *ɛeeʃ* /n/ bread. *kul ɛeeʃ ḥabiib-ak tisurr-u wi-kul ɛeeʃ ɛadiww-ak tiqurr-u [prov]* ≈ if you eat the food of a friend it makes him glad, if you eat the food of an enemy he resents it. ‖ *ʃakl^{i} ɛeeʃ* earning one's daily bread, making one's living. *ʃaakul ɛeeʃ ʃizzaay* how shall I earn a living? - *qaṭaɛ ɛeeʃ(-u)* to cut off the source of (s.o.'s) livelihood, lose (s.o.) his job. - *kalna sawa ɛeeʃ wi-malḥ* we've been through thick and thin together, we're close friends. *ɛalaʃaan xaaṭir il-ɛeeʃ wil-malḥ illi benna* for the sake of all we mean to each other.

معيشة *maɛiiʃa* /n/ life, living (especially from the material point of view). *ʃil-maɛiiʃa ɣalya* life is expensive. *mustawa l-maɛiiʃa* the standard of living. *mistirayyaḥ fi-maɛiʃt-(u)* in comfortable circumstances. *ʃoodit maɛiiʃa* living room.

معيشي *maɛiiʃi*↑ /adj/ pertaining to everyday life. *ʃil-ʃumuur il-maɛiʃiyya* everyday affairs.

معاش *maɛaaʃ* /n pl *-aat*/ pension. ‖*ṭiliɛ ɛal-maɛaaʃ* to retire.

عيّش *ɛayyiʃ* /vt/ **1** to provide subsistence for. *xal-ha mɛayyiʃ-ha* her uncle supports her. **2** to keep alive, sustain. - vn *taɛyiiʃ*; ava *miɛayyiʃ*.

اتعيّش *ʔitɛayyiʃ* /vi/ **1** to earn a living. **2** passive of *ɛayyiʃ*. - ava/iva *mitɛayyiʃ*.

إعاشة *ʔiɛaaʃa* /n/ provision (for), support. *ʔil-ḥukuuma b-tiɛmil tartibat-ha ɛaʃaan ʔiɛaaʃit is-sukkaan min gidiid fi-manṭiqit il-qanaal* the government is making arrangements in order to provide for the inhabitants of the Canal area again.

ع ى ض

عيضة *ɛeeḍa, ɛiiḍa* /n/ a mess, a bad condition. *ḥalit-hum baqit ɛeeḍa* their life turned to misery.

ع ى ط

عياط *ɛuyaaṭ* or *ɛiyaaṭ* /n/ crying, weeping. *yalla ninfitiḥ fil-ɛiyaaṭ* come on then, let's all have a good cry!

عيّاط *ɛayyaaṭ* /n */ one who cries a lot, cry-baby.

عيّط *ɛayyaṭ* **1** /vi/ to cry, weep. *ɛayyaṭ lamma nfalaq* he cried his eyes out. **2** /vt/ to make (s.o.) weep. *ʕeeh illi mɛayyaṭ-ak kida ya-bn-i* what are you crying like that for, son? - ava/iva *miɛayyaṭ*.

ع ى ف

عاف *ɛaaf (i)* /vt/ to disdain. *nifs-i ɛaafit il-ʃakl* I went off eating. - vn *ɛayafaan*; ava *ɛaayif*.

اتعاف *ʔitɛaaf* /vi/ to be disdained. - iva *mitɛaaf*.

ع ى ق

عياقة *ɛayaaqa, ɛiyaaqa* /n/ dandyism, foppishness.

عايق *ɛaayiq* **1** /adj * and pl *ɛuyyaaq*/ dandified, foppish. **2** /coll n/ *[bot]* delphinium(s).

عايقة *ɛayqa* /n pl *-aat*/ *[obsol]* madam of a brothel.

اتعايق *ʔitɛaayiq* /vi/ to show off, behave ostentatiously. *bi-yitɛaayiq bi-ɛarabiyt-u* he goes around showing off his car. - ava *mitɛaayiq*.

ع ى ل see ع و ل: *ɛeela, ɛaaʔila, ɛayyil, ɛiyaal, ɛiyaali*

ع ى ن [1]

عين *ɛeen* /fem n, pl *ɛiyuun, ɛuyuun*/ **1** /pl also *ɛeneen*/ eye. *ɛenee qaɛiifa* his eyes are weak. *ʃayf-u quddaam ɛenay-ya* I see him before my very eyes. *duktoor ɛeneen* oculist. *b-aḥibb-ak qadd^{i} ɛnay-ya* I love you dearly. *ma-qdirt^{i}-ʃ ʃaḥuṭṭ^{i} ɛeen-i f-ɛeen-u* I couldn't look him in the eye. *ʔin-naas tunẓur ʔilee b-ɛeen l-iḥtiraam* people regard him with respect. ‖*ɛeneen* ... yes, dear (in response to a call), as in *maama* - *ɛeneen maama* 'Mummy!' 'Yes, dear!'. - (*min* or *fi-*) *ɛenay-ya (l-itneen)* or *ɛala ɛeen-i w-raas-i* or *min ɛeen-i di*

w-ɛeen-ı di at your service! with pleasure! (response to a request). - *ɛeen-(u) fi-* (he) wants (s.th.) very badly, as in *ʕiftiri-ha-lha madaam ɛen-ha fiiha* buy it for her since she wants it so badly. - *ɛeen-(u) ɛala* ... he has his eye on ..., he's out to get ..., as in *ɛeen-u ɛal-bitt' di* he has his eye on that girl. - *ya ɛeen-i* (1) how marvellous! (2) poor thing! what a pity! - *(ya) ɛeen-i ɛala* ... (1) how marvellous is ...! as in *ya ɛeen-i ɛal-gamaal da* how beautiful this is! (2) *[women]* how I pity ...! as in *ya ɛeen-i ɛaleek* you poor dear! - *(da) bi-ɛeen-(u)* not even if (he) gives (his) eye, as in *ʕinta ɛaawiz ɛafara gneeh ɛal-ħikaaya di - da b-ɛeen-ak* you want ten pounds for this? no way! - *ɛeen-i ɛeen-ak* openly, frankly, as in *bi-yisraqu ɛeen-i ɛeen-ak* they steal brazenly. - *ɛala ɛeen-ak ya taagir* openly, not trying to hide anything, as in *bi-thazzar maɛa r-riggaala kida ɛala ɛeen-ak ya taagir* she jokes around quite openly with the men. - *wiqiɛ* (or *nizil) min ɛeen(-u)* to fall out of favour with (s.o.). - *daxal fi-ɛeen(-u)* to gain favour with (s.o.). - *ħıss-ak ɛeen-ak* ≈ just you dare! - *kamaan fiik ɛeen* ... do you still have the cheek ..., as in *kamaan fiik ɛeen tiqawıħ-ni* do you still have the gall to bicker with me? - *ɛeen-ak ma-tfuuf ʕilla n-nuur* (may your eye see only light) ≈ you can't imagine ...! as in *ʕil-mufkila kibrit wi-kibrit ɛeen-ak ma-tfuuf ʕilla n-nuur ɛa-lli ħaṣal* the problem grew larger and larger - you can't imagine what happened! *fufna vılla ɛeen-ak ma-tfuuf ʕilla n-nuur mubılya ʕeeh wı-ruxaam ʕeeh* such a villa as we saw! you could never imagine - such furniture, such marble ...! - *ʕil-ɛeen baṣiira wıl-yadd' qaṣiira [prov]* (the eye sees but the arm is short) ≈ the desire (or willingness) is there but not the means. - *ħaaga ɛaleeha l-ɛeen* something desirable. - *ɛeen-i ɛaleek barda* may I not be envious of you (said to emphasize admiration) - *ʕil-ɛeen tikrah ılli ʕaḥsan minha [prov]* ≈ people tend to hate their betters. - *ɛeen ıl-ɛaql* the epitome of reasonableness. - *ʕabu ɛeen farva* one who is never satisfied. - *ʃallaɛ ɛeen(-u)* to give (s.o.) a hard time, as in *ħ-addii-lu fuvla ıʃallaɛ ɛeen-u* I'll give him a job that will really make him slog hard. - *ya ħabbıt ɛeen-ı* ≈ my poor dear! (expression of affectionate sympathy). - *warra l-ɛeen ıl-ħamra* to show one's anger, show one's displeasure. - *mala ɛeen(-u)* see *mala*[2]. - *ɛeen fıg-ganna w-ɛeen fın-naar* ≈ not being able to make up one's mind. - *ʕılli ybuṣṣ-i-lı b-ɛeen ʕabuṣṣ-ı-lu bıl-ıtneen* ≈ if someone treats me well, I'll treat him even better. - *ħaʃʃ .. fi-ɛeen(-u)* to take good care of, as in *law ga ɛandı ħ-aħuʃʃ-u f-ɛeen-ı* if he comes to stay with me I'll look after him very well. - *ɛeen (ig-)gamal* walnut(s). **2** any of various objects bearing a resemblance to the eye (e.g., burner of a stove, bud of a plant). *beeḍ ɛiyuun* fried eggs sunny-side up. **3** /usu pl/ hole, opening, space. *ɛuyuun il-miʃt* spaces between the teeth of a comb. *ɛuyuun ıl-maṣfa* holes in a sieve. **4** spring (of water). ‖ *ɛeen ʃams* a north-eastern suburb of Cairo. — /no pl/ **5** *ʕil-ɛeen* the evil eye, the capacity for harming people by regarding them enviously. *ṣabit-ni l-ɛeen* I was afflicted by the evil eye. **6** /always in constr/ epitome, essence. *da ɛeen il-ħaqiiqa* ≈ this is God's truth. *ɛeen ʕaɛyaan iṣ-ṣiɛiid* the most notable of the notables of Upper Egypt. **7** *[leg]* property. *ṣaaħib ıl-ɛeen* the property owner. — /pl *-aat*/ **8** eighteenth letter of the Arabic alphabet.

¶ *bi-ɛeen(-u)* **1** the very selfsame. *miʃ hiyya di s-saaɛa - laʕʕa di hiyya b-ɛen-ha* 'That's not the watch.' 'Oh yes, it's the selfsame watch!' **2** certainly not, no way. *ʕiddii-ni ɋirʃ - bi-ɛeen-ak* 'Give me a piastre.' 'Nothing doing.'

أعيان *ʕaɛyaan* /pl n/ notables.

عينى *ɛeeni, ɛaynıʔ* /adj/ *[leg]* corporeal, material. *ħaqqʾ ɛeeni* material right. ‖ *qaṣr il-ɛeeni* Kasr el-Aini, a large government teaching hospital.

عينيّة *ɛeniyya* /n pl *-aat*/ eye-piece (of, e.g., microscope, telescope).

عيّنه *ɛayyina* /n pl *-aat*/ specimen, sample. *ɛayyinit ɋumaaf* a cloth sample. *xadna ɛayyinaat mil-ʕarḍ* we took samples of the soil. *talat ʕarbaɛ ʃabaab mil-ɛayyinaa-dı* three or four youths of that type. ‖ *ʕil-ɛayyına bayyına [prov]* the part reveals the whole.

عيانا *ɛayaanan* /adv/ openly. *xad-ha ɛayaanan bayaanan* he took it openly before everyone.

عيانى *ɛayaani* /adj/ material, visible. *ħalaat ɛayaniyya* concrete examples.

معين *miɛyin* or *muɛyan* /adj invar/ pertaining to a spring. *mayya mıɛyin* or *mayya muɛyan* spring water, water drawn from underground (as distinct from, e.g., Nile water).

عيّن *ɛayyin* /vt/ **1** to determine, specify. *ʕik-kuɛuub bıtaaɛit ıf-fikaat bı-tɛayyin-lak raṣiid-ak kaam* the stubs of the cheques specify for you the balance remaining. **2** to appoint, name to an office. *ɛayyinuu ʃahbandar it-tuggaar* they appointed him chief of the merchants. **3** to carry out an on-the-spot inspection of. - vn *taɛyın*; ava/pva *miɛayyin*; pva *muɛayyan*.

تعيين *taɛyiin* /n pl *-aat*/ **1** appointment, position, job. **2** *[mil]* (one man's) rations.

معيّن *muɛayyan* **1** /adj */ particular, specific. *makaan muɛayyan* a particular place. *fatrit ṣoom muɛayyana* a

set period of fasting. **2** /n pl *-aat*/ rhomboid.

اتعيّن *ʔitɛayyin* /vi/ **1** to be specified, be determined. *makaan ig-gariima tɛayyin biẓ-ẓabṭ* the site of the crime has been fixed precisely. **2** to be appointed. *nifs-i ʔatɛayyin fi-ʃirka* I'd like to get a job in a company. - vn *taɛayyun*; ava *mitɛayyin*.

عاين *ɛaayin* /vt/ to carry out an on-the-spot inspection of. *bi-tiigi lagna min wizaarit iṣ-ṣiḥḥa tɛaayin il-makaan* a committee from the Ministry of Health comes to inspect the place. - vn *muɛayna*; ava/pva *miɛaayin*.

معاينه *muɛayna* /n pl *-aat*/ on-the-spot inspection. *ɛal-muɛayna* on inspection, as in *ma-niʃtirii-ʃ ʔilla ɛal-maɛayna* we don't buy unless we inspect (the goods) first.

ع ى ن [2]

عان *ɛaan*[2] *(i)* /vt/ **1a** to remove, take away. *ɛin-ha min hina* take it away from here! **1b** to lift, carry. *ɛiin iʃ-ʃanṭa ɛalayya* lift the bag onto my back! **2** to keep in a safe place. *bi-yɛiin filuus-u taḥt il-balaaṭa* he keeps his money hidden away under a tile. - vn *ɛeen, ɛayanaan, ɛiyaana*; ava *ɛaayin*; pva *maɛyuun*.

اتعان *ʔitɛaan*[2] /vi/ **1a** to be removed, be taken away. **1b** to be lifted, be carried. *ʔana ɛaawiz iʃ-ʃanṭa titɛaan ɛalayya* I want to have the bag lifted onto my back. **2** to be kept in a safe place. *ʔil-filuus laazim titɛaan fil-bank* the money must be put away in the bank. *ʔil-muftaaḥ ḥa-yitɛaan taḥt id-dawwaasa* the key will be kept hidden under the door-mat. - iva *mitɛaan*.

انعان *ʔinɛaan*[2] = *ʔitɛaan*[2]. - iva *minɛaan*.

ع ى ى

عيى *ɛiyi (a)* /vi/ to fall sick. *ʔawwil ma ɛyiit rigl-i wirmit* when first I fell sick my foot swelled. - vn *ɛaya*; ava *ɛayyaan*.

عيا *ɛaya*[1] *(i)* /vt/ to cause to be ill. *ʔid-dawa da ɛayaa-ni ʔaktar* this medicine made me iller than before. ‖*manẓar yiɛyi* a sickening sight. - vn *ɛaya*; ava *ɛaayi*.

عيا *ɛaya*[2] /n/ illness. *hiyya lissa qayma min ɛaya* she's just getting over an illness. *ʔid-duktuur muxtaṣṣ*[i] *fil-ɛaya da* the doctor specializes in that illness.

عيّان *ɛayyaan* /n */ patient.

اتعيا *ʔitɛaya* /vi/ to be made ill. - iva *mitɛiyi*.

إعياء *ʔiɛyaaʔ* /n/ weariness, fatigue. *ʔana f-ɤaayit il-ʔiɛyaaʔ* I am exhausted.

غ

غ ا ب

غاب *ɣaab*[1] /coll n/ reed(s), cane(s). *ɣaab farsi* Persian cane. ‖ *ɣaab ʃafrangi* bamboo. - *ɣaawi furb il-ɣaab* fond of smoking a *gooza*.

غابة *ɣaaba* /n pl *-aat*) **1** /unit n/ a (piece of) reed, a (piece of) cane. *ɣaabit gooza* the mouth-reed of a *gooza* (see Pl.I, 8). **2** forest, jungle.

غ ا ر[1]

غار *ɣaar*[1] /n/ *[bot]* bay (Laurus nobilis).

غ ا ر[2] see غ و ر : *ɣaar*[4], *ɣaara*

غ ا ز

غاز *ɣaaz* <perh Fr> /n pl *-aat*/ gas. *ɣazaat saamma* poisonous gases.

غازى *ɣaazi*[1] /adj/ gaseous.

غ ا ص

غاصة *ɣaaṣa* <It *gassa*> /n pl *-aat*/ *[naut]* grommet.

غ ا غ

غاغة *ɣaaɣa* /n/ noise, uproar, tumult.

غ ا ى

غاية *ɣaaya, ɣaaya* /n pl *-aat*/ **1** extreme, furthest extent. *ɣaayit is-saɛaada* extreme happiness. *ʃana mabsuuṭ lil-ɣaaya* I am extremely pleased. ‖ *ɣayt-u* in short, to cut a long story short, as in *ɣayt-u baṣṣeet laɛeet gasad-i mxaddıl kull-u* to cut a long story short, I suddenly discovered that my whole body had gone numb. **2** aim, goal. *ɣayit-na l-ʃixlaaṣ fil-ɛamal* our aim is devotion to work. ‖ *ʃil-ɣaaya tbarrar il-wasiila [prov]* the end justifies the means.

¶ *li-ɣaayit* /prep/ until, till, up to. *lı-ɣaayit dilwaɛti ma-rigɛit-ʃ* she hasn't come back so far. *waṣṣal-ni l-ɣaayit il-beet* he saw me home. - *li-ɣaayit ma* or *li-ɣaayit lamma* /conj/ till, until. *miʃ ḥa-niftiri minnu l-ɣaayit ma ybiiɛ bit-tasɛiira* we won't buy from him until he sells at the government fixed price. *min saaɛit ma twalad li-ɣaayit lamma baɛa sulṭaan* from the moment he was born till he became sultan.

غ ب ر

غبرة *ɣabara* /n/ fine dust.

أغبر *ʃaɣbar* /adj, fem *ɣabra*, pl *ɣubr*/ **1** dusty, covered with dust. **2** miserable, rotten, lousy. *zaman ʃaɣbar* miserable times. ‖ *wiʃʃ-(u) ʃaɣbar* (he) brings bad luck.

غبار *ɣubaar* /n/ fine dust. ‖ *ɣubaar zarriʔ* atomic fall-out.

غبارة *ɣubaara* /n/ **1** /pl *-aat*/ speck of dust. **2** /no pl/ fine quality hashish. *ɣubaarit il-ɣubaara* superfine hashish.

غبّر *ɣabbar* **1** /vt/ to make dusty, cover with dust. **2** /vi/ to become dusty. - vn *taɣbiir*; ava/pva *miṭɣabbar*.

اتغبّر *ʃiṭɣabbar* /vi/ to become dusty, get covered with dust. *ʃik-karaasi ṭɣabbarit wı-baɛa ḥal-ha zayy ıl-hibaab* the chairs got covered with dust and are in a filthy state. - ava/iva *miṭɣabbar*.

غ ب ش

أغبش *ʃaɣbaʃ* /adj, fem *ɣabʃa*, pl *ɣubʃ*/ **1** dark grey in colour. **2** faded, muted (of colours).

غبّش *ɣabbiʃ* **1** /vt/ to cloud, make murky. *ʃir-ruṭuuba ɣabbiʃit ɛizaaz iʃ-ʃababiik* moisture clouded the windows. *ɛizaaz miɣabbiʃ* (1) cloudy, murky glass. (2) frosted or semi-opaque glass. **2** /vi/ to cloud over, become murky or difficult to see through. *ʃid-dinya kaanit miɣabbiʃa saaɛit il-fagriyya* it was misty around dawn. - vn *taɣbiiʃ*; ava/pva *miɣabbiʃ*.

اتغبّش ʔitʁabbiʃ /vi/ to become murky, cloudy or foggy. - ava *mitʁabbiʃ*.

غ ب ط

غبيط ʁabiiṭ /n pl ʁibṭaan, ʁibṭa, ʁibíṭa, ʔiʁbiṭa/ sack split sideways and slung over a donkey's back to carry manure or dirt (see Pl.D, 4). — /adjectivally/ *raagil ʁabiiṭ bi-ṣaḥiiḥ* a real oaf of a man.

غ ب ن

غبن ʁaban↑ *(i)* /vt/ to do (s.o.) an injustice (particularly in business). *kull' waaḥid miṭ-ṭarafeen bi-yʿquul ʔinnu maʁbuun fil-beeʿa* each of the two sides claims he's been had in the deal. - vn *ʁabn*; ava *ʁaabin*; pva *maʁbuun*.

غبن ʁabn↑ /n/ injustice (particularly in business).

اتغبن ʔitʁaban↑ /vi/ to be done an injustice. - iva *mitʁibin*.

غ ب و

غبي ʁabi /adj pl ʔaʁbiya, ʔaʁbiyya, ʁabiyyiin/ foolish, stupid.

أغبى ʔaʁba /el/ more/most stupid.

غباوة ʁabaawa /n/ foolishness, stupidity. *ʁabawt-u gamda ʿawi* he is very stupid.

غباء ʁabaaʔ↑ = *ʁabaawa*.

اتغابى ʔitʁaaba /vi/ to play the fool, act stupid. *ḥa-titʁaaba ʿalayya* are you going to act the fool with me! - vn *taʁaabi*; ava *mitʁaabi*.

استغبى ʔistaʁba /vt/ **1** to consider stupid or foolish. **2** to select for stupidity. — /vi/ **3** to pretend to be stupid or foolish. - ava *mistaʁbi*.

غ ب ي [1]

غبّى ʁabba /vt/ to hide, conceal. *leeh miʁabbi l-mawḍuuʿ ʿalayya* why are you hiding the matter from me? - vn *taʁbiyya*; ava/pva *miʁabbi*.

اتغبّى ʔitʁabba /vi/ to be hidden, be concealed. - iva *mitʁabbi*.

غ ب ي [2] see غ ب و : *ʁabi, ʔitʁaaba, ʔistaʁba*

غ ت ت

غتت ʁitit /adj */ insupportable (of a person).

غتيت ʁatiit /adj/ unpleasant (of a person).

غتوت ʁatuut /adj/ unpleasant (of a person).

غتاتة ʁataata /n/ unpleasantness.

غتّت ʁattit /vi/ to cause unpleasantness. *ʔil-ʿiyaal kaanu b-yilʿabu w-mabsuṭiin daxal ʁattit ʿaleehum* the kids were happily playing when in he came and spoilt everything for them. - vn *taʁtiit*; ava/pva *miʁattit*.

اتغتّت ʔitʁattit /vi/ (impersonal) passive of *ʁattit*. *kull' leela ynaamu mitʁattit ʿaleehum* every night they go to bed upset. - iva *mitʁattit*.

غ ث ت see غ ت ت

غ ج ر

غجر ʁagar /coll n/ **1** gypsies. **2** disreputable rowdy people.

غجرى ʁagari /n pl ʁagar/ **1** gypsy. **2** rowdy and foul-mouthed man.

غجريّة ʁagariyya /n pl -aat/ **1** gypsy woman. **2** rowdy and foul-mouthed woman.

أغجر ʔaʁgar /el/ more/most abusive or foul-mouthed.

غجّر ʁaggar /vi/ to hurl abuse. *bi-tʁaggarii-li leeh ya wliyya - huwwa-na gooz-ik* what are you screaming abuse at me for, woman - am I your husband? - vn *taʁgiir*; ava *miʁaggar*.

اتغجّر ʔitʁaggar /vi/ (impersonal) passive of *ʁaggar*. *ʔana miʃ illi yitʁaggar liihum* I am not someone to be abused. - iva *mitʁaggar*.

استغجر ʔistaʁgar /vt/ to select for abusiveness. - ava *mistaʁgar*.

غ د ا ن

غدان ʁadaan /n/ spice similar to a clove but larger, used in the preparation of *muʁaat*.

غ د د

غدّة ʁudda /n pl ʁudad, ʁuduud/ gland.

غ د ر

غدر ʁadar *(u)* /vi/ to act treacherously, break faith. *ṣaḥibt-u w-baʿd il-ʿifra ṭ-ṭawiila ʁadar biyya* I befriended him, and after a long friendship he turned against me. - vn *ʁadr*; ava *ʁaadir*; pva *maʁduur*.

غدر ʁadr /n/ perfidy, treachery, betrayal. ‖ *ʿeen il-ʁadr* perfidy incarnate, as in *fi-wiff-i sinn-a-ha yidḥak-li wi-f-ḍahr-i tbuṣṣ-i-li b-ʿeen il-ʁadr* she smiles to my face but plots treachery behind my back.

غدرة ʁadra /inst n. pl *-aat, ʁadaraat*/ an act of perfidy. *ʁadraat iz-zaman* life's betrayals, life's disappointments.

غدّار ʁaddaar /adj */ perfidious, faithless. *ʁaddaar zayy il-baḥr [prov]* as treacherous as the sea.

اتغدر ʔitʁadar /vi/ (impersonal) passive of *ʁadar*. *ʔitʁadar biiha* she was betrayed. - iva *mitʁidir*.

غادر ʁaadir↑ /vt/ to depart from, leave (a place). *miʃ mumkin tiʁaadir il-bilaad* you cannot leave the country. - vn *muʁadra↑*; ava *miʁaadir*; pva *muʁaadar*.

غ د ف

غدفه *ɣudfa* /n pl *ɣudaf/* tight-fitting head-dress resembling a wimple with a long attached cowl that falls to cover the upper part of the body (worn by Muslim women, especially when praying or making the pilgrimage).

غ د ن see غ د ا ن : *ɣadaan*

غ د و see غ د ى : *ɣadwa*

غ د ى

غدا *ɣada* /n/ midday meal, luncheon. *kull' yoom tiruuḥ il-yeeṭ tiwaddi l-ɣada* she carries lunch to the field every day.

غدوة *ɣadwa* /n pl *-aat, ɣidaw↓/* a lunch. *ʔil-ɣadwa kaanit kiwayyisa* the lunch was good. ‖ *ɣadwa wi-tḥasabit ɛaleek* here's a lunch and it's been put to your account (i.e. the lunch has been prepared specially for you, so eat; said by the host to encourage his guests to eat well). - *ɛamliin ɣadwa* having a joint lunch (i.e. each contributing some food).

غدّى *ɣadda* /vt/ to provide lunch for. *ʔayyaam zamaan kaanit il-barɪza tɣaddi ɛeela* in the old days ten piastres would buy lunch for a whole family. - ava *miɣaddi*.

اتغدّى *ʔitɣadda* /vi and vt/ to eat (for) lunch. *ʔana lissa ma-tɣaddet-ʃ* I haven't eaten lunch yet. *ʔitɣaddeena (b-) kabaab* we had kebab for lunch. ‖ *ʔitɣadda bii qabl' ma yitɛaʃʃa biik [prov]* (have him for lunch before he has you for supper) ≈ get your blow in first. - ava *mitɣaddi*.

غ ذ ى see غ د ى and [3] غ ز ى

[1] غ ر ب

غرب *ɣirib* or *ɣarab (u)* /vi/ **1** to set (of the sun). *ɣuruub if-ʃams* or *ʔil-ɣuruub* sunset. *ʔiʃ-ʃams' ɣarabit* the sun has set. **2**↑ *[abus]* to go away, get lost, disappear. *ma tuɣrub min wiʃʃ-i* get out of my sight! - vn *ɣuruub, ɣarabaan*; ava *ɣaarib*.

الغارب *ʔil-ɣaarib: sab-l(u) l-ḥabl[a] ɛal-ɣaarib*↑ to give (s.o.) free rein, to let (s.o.) do what he wants.

غرب *ɣarb* /n/ west. *nizraɛ id-dura gihit il-ɣarb* we plant the maize on the west side. ‖ *ʔiʃ-ʃarq' wil-ɣarb* all over the place, as in *ʔiʃtara ḥagaat miʃ-ʃarq' w-ḥagaat mil-ɣarb* he bought some things from here and some from there.

غربى *ɣarbi, ɣarbi*↑ /adj */ **1** western. *ʔil-baab il-ɣarbi* the west door. **2** western, pertaining to Europe or America. *ʔil-musiiqa l-ɣarbɪyya* western music.

الغربيّة *ʔil-ɣarbɪyya* /prop n/ Gharbiya, a province in the centre of the Delta, administered from Tanta.

غرباوى *ɣarbaawi, ɣarbaawi* /pl *-yya*/ **1** /adj/ of or pertaining to Gharbiya, from Gharbiya. **2** /n/ a man from Gharbiya.

غربة *ɣurba* /n/ state of being a stranger or foreigner, separation from one's home town and people. *ʔil-ɣurba tɛallim [prov]* being a stranger teaches self-reliance.

غرابه *ɣaraaba* /n/ strangeness. *ʔeeh ɣaraabit il-ḥikaaya di* what is so strange about this story?

غريب *ɣariib* **1** /adj */ **1a** strange, surprising. *ɣariib ʔinni ma-ʃuft-uu-ʃ* it's strange that I didn't see him. **1b** /pl *ʔaɣraab, ɣurb, ɣuraba/* from the outside, alien, foreign. *waaḥid ɣariib ɛan il-ɛeela* one not related to the family. *gism' ɣariib fiz-zoor* a foreign body in the throat. **2** /n pl *ʔaɣraab, ɣurb, ɣuraba/* stranger, outsider. ‖ *ʔil-ɣariib ʔaɛma wa-law kaan baṣiir [prov]* (the stranger is blind no matter how good his sight) an outsider, no matter how wise, can never understand your problems.

الغريب *ʔil-ɣariib* /prop n/: *siid-i l-ɣariib* a Muslim saint whose tomb is in Suez.

غريبه *ɣariiba* /n/ **1** any of a number of eye ailments. **2** /coll/ impurities in grain. — /interj/ **3** how strange!

أغرب *ʔaɣrab* /el/ stranger/strangest.

مغرب *maɣrib* /n pl *maɣaarib/* **1a** period around sunset, late afternoon. *ḥ-agib-hum-lak in-nahar-da l-maɣrib* I will bring them to you at sunset. **1b** *ʔil-maɣrib* or *ṣalaat il-maɣrib [Isl]* the sunset prayer. **2a** west, place where the sun sets. *ʔil-maʃaariq wil-maɣaarib* (the easts and the wests) everywhere, as in *rabb il-maʃaariq wil-maɣaarib* Lord of the whole world. **2b** *ʔil-maɣrib* (1) North Africa to the west of Libya. (2) Morocco.

مغربى *maɣrabi* /pl *maɣarba/* **1** /adj/ **1a** of or pertaining to North Africa west of Libya. ‖ *mooz maɣrabi* variety of high quality banana with a spotted skin. **1b** Moroccan. **2** /n/ a Moroccan.

مغربيّة *maɣrɪbɪyya* /n pl *-aat/* period around sunset, late afternoon.

غرّب *ɣarrab* /vt/ **1** to cause to leave one's home, cause to go abroad. *ʔakl il-ɛeef ɣarrab-ni* I left home in search of a livelihood. **2** to estrange. *ʔil-buɛd' ɣarrab-na* long separation has made us strangers. — /vi/ **3** to turn or move to the west. *tiɣarrab tiʃarraq miʃ ḥa-taaxud ɣeer naṣiib-ak* go west, go east, you will get only what has been predestined for you. - ava *miɣarrab*.

اتغرّب *ʔitɣarrab* /vi/ **1** to leave one's home for a different city or country. *ʔitɣarabt' w-ʔana f-sinn itnaʃar* I left home at twelve. **2** to be made to leave one's home for another city. - ava/iva *mitɣarrab*.

اغترب ʔixtagrab /vi/ to settle abroad. - vn ʔixtiraab; ava mixtirib.

مغترب muxtarib /n */ **1** *[acad]* foreign student. **2** Arab emigrant living in a non-Arab country.

استغرب ʔistaɣrab **1** /vt/ to consider strange or amazing. ʔistaɣrabt illi ḥaṣal I thought what had happened was astonishing. **2** /vi/ to be astonished, be amazed, be surprised. ʔana b-astaɣrab ʔinnak bi-tirfii-ni I am astonished that you should bribe me. baṣṣuu-li bi-stiɣraab they looked at me in amazement. - vn ʔistiɣraab; ava mistaɣrab.

غ ر ب [2]

غراب ɣuraab /n pl ɣirbaan, ɣirba, ɣiríba/ **1** crow. ‖ɣuraab nuuḥi raven. - ɛiff[i] ɣuraab fungi (specifically mushrooms). - ɣurzit rigl[i] ɣuraab herring-bone stitch. - ɣuraab il-been bird of ill-omen, one who brings bad news or misfortune. - ɛaamil zayy il-ɣuraab crabbed and ugly. - ʔeef (or yaama) gaab il-ɣuraab l-umm-u *[prov]* what (or how often) did the crow bring to its mother? (of one who brings a worthless gift or disappoints in the fulfilment of his obligations). - nizil b-iid-u rigl[i] ɣuraab ʈiliɛ biiha xuff[i] gamal he stuck in his hand thin (i.e. empty) as a crow's foot and pulled it out thick (i e. full) as a camel's hoof (of a greedy eater). - zayy[i] gamɛiyyit il-ɣirbaan ʔawwil-ha kaak wi-ʔaxir-ha kaak *[prov]* like a meeting of crows, nothing but cawing. **2a** *[carp, metal]* dead centre (of a lethe). **2b** *[text]* tip (of a shuttle).

غ ر ب [3]

see غ ر ی ب : ɣurayyiba

غ ر ب ل

غربال ɣurbaal /n pl ɣarabiil/ large coarse-meshed sieve, riddle. ‖ʃaal il-mayya bil-ɣurbaal *[prov]* (he carried the water in the sieve) ≈ he managed the impossible. - ʔil-ɣurbaal ig-gidiid lu ʃadda *[prov]* (the new sieve is taut) ≈ a new broom sweeps clean. - ʔilli ma yʃuuf min il-ɣurbaal yibqa ʔaɛma *[prov]* he who can't see through a sieve must be blind (of one who is blind to the obvious). - ʔabu ɣarabiil dragon-fly.

غربل ɣarbil **1** /vt/ to sieve or sift with a ɣurbaal. bi-yɣarbil il-ɣalla he sifts the wheat. ‖fi-yoom is-subuuɛ bi-yɣarbilu l-ɛayyil fi-ɣurbaal they shake the baby around in a sieve on the seventh day after his birth. **2** /vi/ *[eng, mech, auto]* to shake, vibrate, spin off balance, spin off centre. ɛagal il-ɛarabiyya ɛaayiz yitwizin ɛafaan ma-yɣarbil-ʃ the car's wheels need balancing so that they won't vibrate. - vn ɣarbala; ava/pva miɣarbil.

اتغربل ʔitɣarbil /vi/ to be sieved or sifted with a ɣurbaal. - iva mitɣarbil.

غ ر ر [1]

غرّ ɣarr (u) /vt/ to deceive, take in. ʔik-kalaam da ɣarr-i-ni the business took me in. kaanit maɣruura fiik she overrated you. - vn ɣarr, ɣararaan; ava ɣaarir; pva maɣruur.

مغرور maɣruur (also maɣruur fin-nafs) /adj */ conceited, vain.

غرور ɣuruur /n/ vanity, conceit. ʔil-ɣuruur waxd-u he is utterly conceited.

غرور ɣaruur /adj invar, sometimes fem ɣaruura/ treacherous (of time, life etc.). ʔid-dinya l-ɣaruura the deceptive world, life the deceiver.

اتغرّ ʔitɣarr /vi/ **1** to be deceived, be taken in. ʔitɣarreet fi-gamal-ha I was taken in by her beauty. **2** to become conceited or vain. - ava/iva mitɣarr.

¶ ʔitɣarr[i] f-nafs(-u) to become vain.

انغرّ ʔinɣarr = ʔitɣarr. - ava/iva minɣarr.

غ ر ر [2]

غرّ ɣurr /coll n/ coot(s).

غرّة ɣurra /n pl -aat, ɣurar/ **1** blaze (on a horse's forehead). **2** first day of a lunar month.

غرارة ɣaraara /n pl ɣaraayir/ large bag of stout coarsely-woven material for grain (capacity approximately 120 kg.).

غ ر ز

غرز ɣaraz, ɣaraz (i) (also ɣaras) **1** /vt/ to plant, insert (especially in the ground). ɣarazt[a] ɛaṣayt-i fil-ʔarḍ[a] ɛafaan ʔaɛallim il-makaan I planted my stick in the ground to mark the place. ɣarazt[i] ṣbaaɛ-i f-ɛeen-u I poked my finger in his eye. **2** /vi/ to become stuck. rigl-i ɣarazit fiṭ-ṭiin my foot got stuck in the mud. ʔil-ɛarabiyya ɣarazit fir-raml the car got stuck in the sand. - vn ɣarz, ɣarazaan; ava ɣaariz; pva maɣruuz.

غرزة ɣurza /n pl -aat, ɣuraz/ **1** stitch. **2** place such as small teashop, in which hashish is smoked.

غريزة ɣariiza /n pl ɣaraayiz/ instinct. ɣariizit ig-gins the sexual instinct. ʔis-sirqa ɣariiza fiihum they are a thieving lot.

غريزي ɣariizi↑ /adj */ instinctive, impulsive, natural. da raagil ḥissi w-ɣariizi he is a sensuous man who obeys only his natural instincts.

مغرز maɣraz /n pl maɣaariz/ *[slang]* trick, trap, intrigue (against s.o.).

اتغرز ʔitɣaraz (also ʔitɣaras) /vi/ **1** to be planted, be inserted. ʔif-fatla laazim titɣiriz gaamid fil-ʔarḍ the

seedling should be firmly fixed in the ground. **2** to become stuck. *rigl-i ɣarazit fiṭ-ṭiin* my foot got stuck in the mud. **3** to fall victim (to an intrigue). *ʃitɣarazt' fil-maqlab illi ɛamalu-huu-li* I fell in the trap they laid for me. - ava/iva *mitɣiriz*.

انغرز| *ʃinɣaraz* = *ʃitɣaraz*. - ava/iva *minɣiriz*.

غ ر س see غ ر ز : *ɣaras, ʃitɣaras*

غ ر ض

غرض *ɣaraḍ* /n pl *ʃaɣraaḍ*/ **1** desired end, objective, goal. *ʃeeh il-ɣaraḍ min kida* what's the purpose of that? *ʃana ɣaraḍ-i ʃaqul-lak xalli baal-ak* what I'm trying to tell you is, take care! ‖*luu ɣaraḍ fiiha* he wants her (usually with the sense: he wants to marry her). -*fii ɣaraḍ fi-nafs-u* he's up to something. - *ʃil-ɣaraḍ* in short, to cut a long story short, as in *ʃil-ɣaraḍ ya ḥabibt-i nizilt' w-xadt il-ʃutubiis* in short, my dear, I went out and took the bus. - *ʃeef ɣaraḍ il-ʃaɛma - qaal quffit ɛiyuun [prov]* what could a blind man want more than a basket full of eyes? (said when s.th. longed for is offered). **2** bias, prejudice. *ʃif-ʃirka kull-a-ha ʃaɣraaḍ* the company runs on favouritism. *ʃil-ɣaraḍ maraḍ [prov]* prejudice is a sickness. - *ʃaɣraaḍ* /pl n/ **3** movable belongings, personal effects.

مغرض *muɣriḍ* /adj */ biased. *ʃil-ḥakam ṭiliɛ muɣriḍ* the referee turned out to be biased.

غ ر غ ا ر

غرغار *ɣirɣaar: xaʃab ɣirɣaar [carp]* cheap poor quality wood such as is used as a base for inlay work.

غ ر غ ر

غرغر *ɣarɣar* /vi/ to gargle. - vn *ɣarɣara*; ava *miɣarɣar*.

غرغرة *ɣarɣara* /n/ gargle, liquid used for gargling.

تغرغر| *ʃitɣarɣar* /vi/ **1** = *ɣarɣar*. **2** (impersonal) passive of *ɣarɣar*. *ʃid-dawa da yitɣarɣar bii* this medicine is to be used as a gargle. - ava/iva *mitɣarɣar*.

غ ر غ ر –

غرغرينة *ɣarɣariina* <prob It *gangrena*> /n/ gangrene.

غ ر ف ¹

غرف *ɣaraf¹, ɣaraf¹ (i)* /vt/ to serve or distribute (food) with a ladle or large spoon. *ɣarf if-ʃurba fil-ʃaṭbaaq* ladling soup into bowls. *yalla ɛas-sufra maama ɣarafit il-ʃakl* up at the table! mother's dished out the food! ‖*law ruḥt il-kuweet tiqdar tiɣrif filuus zayy' ma-nta ɛaayiz* if you went to Kuwait you'ld be able to rake in as much money as you wanted. - vn *ɣarf, ɣariif*; ava *ɣaarif*; pva *magruuf*.

غرف *ɣaraf², ɣaraf² (u)* /vi/ to eat in large mouthfuls. *ʃinta b-tuɣruf leeh huwwa-nta f-sabaq* why are you gobbling down your food? do you think you're in a race? ‖*ʃuɣruf fil-mayya [naut]* hold water! - vn *ɣarf*; ava *ɣaarif*.

مغرفة *maɣrafa* /n pl *maɣaarif*/ **1** ladle, scoop. ‖*ḥalla w-huwwa maɣrafit-ha [prov]* (a cooking pot and he's its ladle) ≈ he knows the matter through and through. **2** ladleful. *kifaaya min iz-ziir maɣrafa [prov]* (one ladleful from the pitcher is enough) satisfy your needs modestly.

تغرف| *ʃitɣaraf, ʃitɣaṛaf* /vi/ passive of *ɣaraf¹* and *ɣaraf²*. - ava/iva *mitɣirif*.

غ ر ف ²

غرفة *ɣurfa↑* /n pl *ɣuraf*/ room. *ɣurfit ɛamaliyyaat* operating theatre. *ʃil-ɣurfa ṭ-ṭugariyya* the Chamber of Commerce.

غ ر ق

غرق *ɣiriq (a)* /vi/ **1** to sink in water, drown. *ʃil-markib ɣirqit* the ship sank. *ʃil-walad ɣiriq fit-tirɛa* the boy drowned in the canal. ‖*yiɣraq fi-fibr' mayya [prov]* (he'd drown in a hand-span of water) ≈ he couldn't fight his way out of a paper bag. - *ɣiriq fi-maʃaakil* to become bogged down in problems. - *ɣarqaan fin-noom* fast asleep. - *ɣarqaan li-fuʃt-u fil-ḥubb* hopelessly in love. - *ɣiriq fil-kitaab* to become totally absorbed in the book. **2** to become soaked, became drenched. *qamiiṣ-i ɣarqaan damm* my shirt is soaked in blood. - vn *ɣaraq*; ava *ɣarqaan*.

غريق *ɣariiq* **1** /n */ drowned man. **2** /n, no pl/ deep water. *ʃil-wuquuf fil-ɣariiq* treading water.

غرّق *ɣarraq* /vt/ **1** to submerge, drown. **2** to soak, drench, flood. *ʃin-naṭara ɣarraqit-hum* the rain soaked them. *ʃil-baḥr' zaad wi-ɣarraq il-bilaad* the Nile rose and flooded the country. **3** to entangle, bog down. - vn *taɣriiq*; ava/pva *miɣarraq*.

تغرّق| *ʃitɣarraq* /vi/ **1** to be submerged, be drowned. **2** to be soaked, be drenched, be flooded. *bi-yistanna fil-ɣeeṭ li-ḥadd' ma l-mayya tiigi wi-yitɣarraq* it stays in the field until the water comes and it is flooded. - ava/iva *mitɣarraq*.

استغرق| *ʃistaɣraq* **1** /vt/ to take up, consume (time). *ʃil-ḥikaaya staɣraqit waqt' ṭawiil* the matter took a long time. **2** (also *ʃistaɣraq↑*) /vi/ to be absorbed, be immersed (in s.th.). *laqeet-u mistaɣraq fil-kitaab* I found

him absorbed in (reading) the book. - ava *mistaʏraq*.

غ ر ل ل
غوريلا *ʏurilla* <perh Engl> /n pl *-aat*/ gorilla.

غ ر م [1]
غرم *ʏirim* or *ʏurum (a)* /vt/ to pay as an unwarranted expense. *ruḥt itɛaʃʃeet fi-maṭɛam ʏirimt[i] xamsa gneeh* I went and had dinner in a restaurant and had to fork out five pounds. *ʃiḍ-ḍaamin ʏaarim [prov]* (it's the guarantor who pays up) don't stand as a guarantor; you'll pay for it. - vn *ʏaraama*; ava *ʏaarim, ʏarmaan*.
غرامة *ʏaraama* /n pl *-aat*/ **1** fine. *ʃilli yxaalif il-muruur yidfaɛ ʏaraama* those who violate the traffic laws have to pay a fine. **2** unwarranted expense. *ḥa-naaxud taks[i] maɛa ʃinnaha tibqa ʏaraama gamda* we'll take a cab even though it'll cost a bomb.
غريم *ʏariim* /n pl *ʏurama*/ **1** adversary, opponent, antagonist. **2** *[obsol]* debtor or creditor.
غرّم *ʏarram* /vt/ **1** to fine. **2** to put to unwarranted expense, sting for a large sum. *bi-yilɛabu fil-ɛaddaad bi-yxalluu yigri zyaada ɛaʃaan yiʏarramuu-na* they fiddle with the meter and make it go faster than it should so that they can make us pay through the nose. - vn *taʏriim*; ava/pva *miʏarram*.
اتغرّم *ʃitʏarram* /vi/ passive of *ʏarram*. - iva *mitʏarram*.

غ ر م [2]
غرام *ʏaraam* /n/ passionate love. ‖*ʃibn[i] ʏaraam* a fun-lover.
غرامي *ʏaraami* /adj/ pertaining to love. *riwaaya ʏaramiyya* romantic novel.
غراميّات *ʏaramiyyaat* /pl n/ romances, love affairs.
مغرم *muʏram* /adj */ fond (of), having a liking (for). *ʃil-fuqaha muʏramiin fatta* Koran-readers are partial to *fatta*. ‖*muʏram ṣabaaba* madly in love.

غ ر ى [1]
غراء، غراء *ʏira* /n/ **1** glue. **2** fixative.
غروي *ʏarawi[ʔ]* /adj/ **1** gluey, glutinous, viscous. **2** *[chem]* colloidal.
غرويّات *ʏarawiyyaat* /pl n/ *[chem]* colloids.
غرّاية *ʏarraaya* /n pl *-aat*/ vessel for melting or dispensing glue, glue-pot.
غرّى *ʏarra* /vt/ to glue. *waaḥid bi-ygammaɛ il-ʃagzaaʃ fi-baɛḍ[i] wit-taani bi-yʏarrii-hum* one assembles the parts and the other glues them. ‖*xabuur miʏarri* (1) a nasty trick. (2) a tight spot, an awkward situation. - vn *taʏriyya*; ava/pva *miʏarri*.

اتغرّى *ʃitʏarra* /vi/ to be glued. *ʃil-ḥittiteen itʏarru f-baɛḍ* the two pieces were glued together. - iva *mitʏarri*.

غ ر ى [2]
أغرى *ʃaʏra* /vt/ to allure, tempt, seduce. *ʃil-ʃuguur ik-kibiira b-tiʏrii-hum yiftaʏalu fil-xaarig* the high pay lures them to work abroad. - vn *ʃiʏraaʃ*; ava *muʏri*.
إغراء *ʃiʏraaʃ* /n/ temptation. *malikit il-ʃiʏraaʃ* sex siren.
مغريات *muʏriyaat[ʔ]* /pl n/ attractions, allurements.

غ ر ى ب
غريّبة *ʏurayyiba* /coll n, pl *-aat*/ rich buttery biscuit(s) somewhat similar to shortbread.

غ ز ار
غزار *ʏuzaar* /coll n/ pigeon(s) of a breed distinguished by a very short beak.

غ ز ر [1]
غزارة *ʏazaara* /n/ abundance. *ʏazaara fil-ʃintaag* a high rate of production. *laazim titriwi b-ʏazaara* it has to be heavily irrigated.
غزير *ʏaziir* /adj/ abundant, thick, luxuriant. *ʃagar ʏaziir* dense bushy trees. *daqn[i] ʏaziira* a luxuriant beard. *maṭar ʏaziir* a downpour.
أغزر *ʃaʏzar[ʔ]* /el/ more/most abundant.

غ ز ر [2] see غ ز ا ر : *ʏuzaar*

غ ز ز [1]
غزّ *ʏazz (u)* /vt/ **1** to poke, prod (with s.th.). *ʏazz il-ḥumaar fi-raqabt-u bil-ɛaṣaaya* he prodded the donkey in the neck with the stick. **2** to poke, insert (into s.th.). *ṣubaaɛ-i raaḥ maʏzuuz fil-ɛagiina* my finger sank into the dough. - vn *ʏazz, ʏazazaan*; ava *ʏaaziz*; pva *maʏzuuz*.
غزّة *ʏazza[1]* /inst n, pl *-aat*/ **1** a prod, a poke. **2** sudden sharp pain, stitch. *ga-k ʏazza* may you perish!
اتغزّ *ʃitʏazz* /vi/ to be poked, be prodded. - iva *mitʏazz*.
انغزّ *ʃinʏazz* = *ʃitʏazz*. - iva *minʏazz*.

غ ز ز [2]
غزّة *ʏazza[2]* /prop n/ Gaza.
غزّاوي *ʏazzaawi* **1** /adj */ of or pertaining to Gaza. **2** /n */ one from Gaza.

غ ز ز [3]
الغزّ *ʃil-ʏuzz* <T *Oğuz*> /coll n/ *[obsol]* the Ottoman ruling caste. ‖*ʃaaxir xidmit il-ʏuzz[a] ɛalqa [prov]* all the

thanks you get for serving a Turk is a beating.

غ ز غ ز

غزغز *ɣazɣaz, ɣazɣiz* /vt/ to poke or prod repeatedly. *fiḍil yiɣazɣaz il-ḥumaar lamma qammaṣ wi-waqqaɛ-u* he kept prodding the donkey till it bucked and threw him. - vn *ɣazɣaza*; ava/pva *miɣazɣaz, miɣazɣiz*.

اتغزغز *ʔitɣazɣaz, ʔitɣazɣiz* /vi/ to be poked repeatedly. - iva *mitɣazɣaz, mitɣazɣiz*.

[1] غ ز ل

غزل *ɣazal[1] (i)* /vt/ to spin. *bi-tiɣzil ṣuuf bil-maɣzal* she's spinning wool on the spindle. - vn *ɣazl*; ava *ɣaazil*; pva *maɣzuul*.

غزل *ɣazl* /n/ spun thread, yarn. ‖ *ɣazl il-banaat* candy floss, cotton candy. - *ʔitlaxbaṭ ɣazl-u* he became confused, he found himself at a loss. - *ɛeeʃa f-suuq il-ɣazl [prov]* ((a woman named) *ɛeeʃa* in the (crowded) yarn market) ≈ a needle in a haystack.

غزّال *ɣazzaal* /n pl *ɣazzaala*/ spinner.

غزّاله *ɣazzaala* /n pl *-aat*/ female spinner. ‖ *ʔil-ɣazzaala b-tiɣzil bi-rigl' ḥmaar [prov]* a (good) spinster can spin (even) with a donkey's leg.

مغزل *maɣzal* /n pl *maɣaazil*/ **1** spindle. ‖ *ʃabu maɣaazil* stork. **2** spinning-mill.

مغزلى *maɣzali* /adj/ spindle-shaped.

اتغزل *ʔitɣazal* /vi/ to be spun. - iva *mitɣizil*.

انغزل *ʔinɣazal* = *ʔitɣazal*. - iva *minɣizil*.

[2] غ ز ل

غزل *ɣazal[2] (i)* /vi/ to squint, look sideways. - vn *ɣazl, ɣazalaan*; ava *ɣaazil*.

غزّل *ɣazzil* /vi/ to lose consciousness, faint. ‖ *ɛenee ɣazzilit* the whites of his eyes showed and he fainted. - vn *taɣzil, ɣazalaan*; ava/pva *miɣazzil*.

[3] غ ز ل

غزل *ɣazal[3]* /n/ **1** addressing of endearments to girls, flirting with girls. **2** love poetry.

غازل *ɣaazil* /vt/ to address with endearments, flirt with. *qaam bi-salamt-u yɣaazil ig-gaww' btaaɛ-i* the smart-aleck had the cheek to flirt with my girl. *ʔil-ḥamaam bi-yṣawṣaw wi-bi-yɣaazil baɛḍ-u* the pigeons bill and coo to one another. - vn *miɣazla*; ava *miɣaazil*.

اتغازل *ʔitɣaazil* /vi/ passive of *ɣaazil*. - iva *mitɣaazil*.

[4] غ ز ل

غزال *ɣazaal* /n pl *ɣizlaan, ɣizlaan*/ gazelle, (loosely also) deer. ‖ *ya ɣazaal* form of address to a pretty girl. - *ʔaḥmar damm il-ɣazaal* scarlet.

غزلانى *ɣuzlaani, ɣizlaani* **1** /adj/ gazelle-like (of the eyes). **2** *[callig]* script based on the *hamayooni* and *diwaani* styles (named after its originator, Ghuzlan Bey).

غزاله *ɣazaala* /n pl *-aat, ɣizlaan, ɣuzlaan*/ female gazelle. ‖ *bi-ɣazaala* temperamental, capricious. - *ʃilɛit ɛalee* (or *gat-lu*) *l-ɣazaala w-saafir* he got one of his whims and went abroad.

غ ز ل ن

غزلن *ɣazlin* /vi/ to lose consciousness, faint. - vn *ɣazlana*; ava *miɣazlin*.

غ ز و see [1] غ ز ى : *ɣazwa*

[1] غ ز ى

غزى *ɣaza (i)* /vt/ to invade. *ʔisraʔiil ɣazit siina* Israel invaded Sinai. - vn *ɣazw*; ava *ɣaazi*.

غزوة *ɣazwa* /inst n, pl *-aat*/ campaign of conquest (especially one of the early Islamic campaigns).

غازى *ɣaazi[2]* /n pl *ɣuzaah↑*/ invader.

غازيّه *ɣaziyya* /n pl *ɣawaazi*/ female dancer and singer (especially in rural areas). ‖ *ʔid-dinya zayy il-ɣaziyya - tirquṣ li-kull' waaḥid ʃiwayya [prov]* fortune is like a dancing-girl, it dances a little for everyone.

اتغزى *ʔitɣaza* /vi/ to be invaded. - iva *mitɣizi*.

[2] غ ز ى

مغزى *maɣza* /n/ meaning, import, significance, implication. *ya tara ʔeeh maɣza zyaarit ir-raʔiis il-mufagʔa l-rusya* I wonder what is the significance of the President's sudden visit to Russia. *kalam-ha ykayyif wi-luu maɣzaa* what she says is good to listen to and makes sense.

[3] غ ز ى

غذاء *ɣiza* /n/ nourishment, nutrition. *ʔil-laban ɣiza kwayyis lil-ʔaṭfaal* milk is very nourishing for children.

غذائى *ɣizaaʔi↑* /adj/ nutritional. *laha qiima ɣizaʔiyya fafar il-laḥma* it has nutritional value that beats meat hollow.

أغذيه *ʔaɣziyaʔ↑* /pl n/ foodstuffs, victuals. *muʔassassit ṣinaaɛit il-ʔaɣziya* the General Organization for Foodstuffs.

غذّى *ɣazza[3]* /vt/ **1** to nourish, feed. *suuʔ it-taɣziya* malnutrition. **2** to feed, supply. *ʔis-silk' da bi-yɣazzi l-muḥarrik* this cable supplies the engine. - vn *taɣziya, taɣziyya*; ava/pva *miɣazzi*.

مغذّى *muɣazzi* /adj/ nourishing.

اتغذّى *ʔitɣazza* /vi/ passive of *ɣazza[3]*. - iva *mitɣazzi*.

غ س ل

غسل *ɣasal (i)* /vt/ **1** to wash. *bi-tiɣsil il-ɣasiil wi-tinʃur-u kull' yoom* she does the washing and hangs it out every day. *laazim tiɣsil sinaan-ak qabl' ma tnaam* you should brush your teeth before you go to bed. ‖*ɣasal-ha wi-naʃar-ha* he made a public spectacle of her. **2** *[text]* to scour. *ʃil-ɣasiil wit-taghiiz* scouring and finishing. - vn *ɣasiil, ɣasl*; ava/pva *maɣsuul*.

غسيل *ɣasiil* /n/ **1** /vn/ wash, washing. *kull-u yiṭlaʕ fil-ɣasiil [prov]* it will all come out in the wash. ‖*ɣasiil il-ʃarq [agric]* flooding the land to remove salinity. *-ʕamaluu-lu ɣasiil muxx* they brainwashed him. *-ʕamaluu-lu ɣasiil miʕda* they cleared his stomach using a stomach-pump. **2** wash, laundry. *ḥ-alimm il-ɣasiil qabl il-maɣrib* I will take the laundry off the line before sunset. *ḥabl' ɣasiil* clothes line.

غسلة *ɣasla* /inst n, pl *-aat*/ a washing. *niɣsil-ha ɣasla kwayyisa* we give it a good wash(ing). *bi-tiḥsib-u ɣasliteen wi-b-taaxud minni tisʕiin qirf* she counts it as a double load of washing and charges me ninety piastres.

غسل *ɣusl* /n/ *[Isl]* ritual bathing. *ɣusl il-mayyit* washing of the dead in preparation for burial.

غسّاله *ɣassaala* /n pl *-aat*/ **1** washer-woman. **2** washing machine.

مغسله *maɣsala* /n pl *maɣaasil*/ table on which corpses are washed.

اتغسل *ʃitɣasal* /vi/ **1** to be washed. **2** *[text]* to be scoured. - iva *mitɣisil*.

انغسل *ʃinɣasal* = *ʃitɣasal*. - iva *minɣisil*.

غسّل *ɣassil* /vt/ to wash (a corpse). *ɣassilna l-marḥuum wi-kaffinnaa* we washed the deceased and wrapped him in a shroud. ‖*ɣassil-u wi-ʕmil-lu ʕimma - qaal ʃana mɣassil wi-qaamin ganna [prov]* ('Wash him and put a turban on his head!' He said, 'Am I a corpse-washer, and a guarantor of Paradise?') ≈ you can only do so much to help people; they have to do some things themselves. - vn *taɣsiil*; ava/pva *miɣassil*.

مغسّل *miɣassil* /n */ corpse-washer.

مغسّلاتى *miɣassalaati* /n pl *-yya*/ = *miɣassil*.

اتغسّل *ʃitɣassil* /vi/ to be washed (of a corpse) - iva *mitɣassil*.

اغتسل *ʃiɣtasal* /vi/ *[Isl]* to perform the major ritual ablution (i.e. to wash the entire body). - vn *ʃiɣtisaal*; ava *muɣtasil*.

غ ش ش

غش *ɣaff (i)* /vt/ **1** to cheat, deceive. *ʃil-gazzaar ɣaff iz-zibuun fil-mizaan* the butcher swindled the customer by giving him short weight. ‖*bidaal ma-tɣiff-u qul-lu f-wiff-u [prov]* (rather than deceive him, tell him to his face) ≈ it's better to tell a painful truth than to mislead. **2** to adulterate. *fii naas bi-tɣiff id-duxxaan* some people adulterate tobacco. *ʃil-laban il-yomeen dool maɣfuuf xaaliṣ* milk is very much watered down these days. **3** to counterfeit (money). *ʃil-filuus il-maɣfuuʃa ktiira fis-suuq* there's a lot of counterfeit money going around. — /vi/ **4** to cheat. *bi-tɣiff' f-liʕb il-kutʃiina* she cheats at cards. **5** to fall sick from eating the wrong, or dirty, food (of cattle and sheep). - vn *ɣiff, ɣafaʃaan*; ava *ɣaafif*; pva *maɣfuuf*.

غيسى *ɣifaʃi* /n */ cheat, one who cheats.

غشّاش *ɣaffaaf* /n */ cheat, one who cheats.

اتغش *ʃitɣaff* /vi/ passive of *ɣaff*. - iva *mitɣaff*.

انغش *ʃinɣaff* = *ʃitɣaff*. - iva *minɣaff*.

غشّس *ɣaffif* /vt/ to help to cheat, co-operate with in cheating. *ʃilli bi-yɣiff' wi-lli yɣaffif-u l-itneen ḥa-yiṭirdu mil-imtiḥaan* both he who cheats and he who helps him will be disqualified from the exam. - vn *taɣfiif*; ava/pva *miɣaffif*.

اتغشّس *ʃitɣaffif* /vi/ passive of *ɣaffif*. - iva *mitɣaffif*.

غ ش م

غشميه *ɣuʃumiyya* /n/ naiveté, inexperience.

أغشم *ʃaɣʃam* /el/ **1** more/most naive of inexperienced. **2** more/most crude, raw etc.

غشيم *ɣaʃiim* /adj pl *ɣuʃm*/ **1** naive, inexperienced. *ma-tqul-ʃ' ʕalayya ɣaʃiim da-na b-astaʕbaṭ bass* don't think I'm naive, I'm only acting silly. **2** crude, raw, unworked. *ḥadiid ɣaʃiim* crude iron. *ḥuṣaan ɣaʃiim* an untrained horse. *xaʃab ɣaʃiim [carp]* unworked timber.

غاسم *ɣaafim*↑ /adj/ brutal, oppressive, tyrannical, unjust.

اتغاسم *ʃitɣaafim* /vi/ to act stupidly or oafishly. - ava *mitɣaafim*.

استغسم *ʃistaɣʃam* or *ʃistaɣfim* **1** /vt/ to consider unexperienced or oafish. /vi/ **2** to act stupidly or oafishly. - ava/iva *mistaɣfim*.

غ ش ى

غشى *ɣiʃi: ɣiʃi ʕalee (ʕaleeha, ʕaleehum* etc.) he (she, they etc.) fainted or became unconscious. - vn *ɣaʃayaan*; pva *maɣʃi*.

غشيان *ɣaʃyaan* /adj/ unconscious, fainting.

غشاء *ɣiʃaaʃ* /n/ **1** cover. **2** membrane.

غشاوة *ɣiʃaawa* /n/ cover, covering, veil. ‖*ʃil-gahl' ɣʃaawa* ≈ ignorance is blind.

غ ص ب

غصب *ɣaṣab (i)* /vt/ to force, compel. *miʃ maʕquul ʃaɣṣib bint-i tiggawwiz* it's inconceivable that I should

force my daughter to marry. - vn *ɣaṣb*; ava *ɣaaṣib*; pva *maɣṣuub*.

غصب *ɣaṣb* /n/ force. ‖*bil-ɣaṣb* by force. *ʕaxaduu-ha minni bil-ɣaṣb* they took it from me by force.

¶ *ɣaṣbin ɛan* or *ɣaṣb" ɛan* in spite of, despite. *ɣaṣbin ɛan ɛeen* ... against the will of ..., as in *ɛamal il-waagib bitaaɛ-u ɣaṣbin ɛan ɛeen-u* he did his homework under protest.

اتغصب *ʕitɣaṣab* /vi/ to be forced, be compelled. - iva *mitɣiṣib*.

انغصب *ʕinɣaṣab* = *ʕitɣaṣab*. - iva *minɣiṣib*.

اغتصب *ʕiɣtaṣab↑* /vt/ **1** to force, force open. *ʕiɣtaṣab il-ɋifl* he forced the lock. ‖*ʕiɣtaṣab diḥka* he forced a laugh. **2** to rape. - vn *ʕiɣtiṣaab*; ava *miɣtiṣib*; pva *muɣtaṣab*.

مغتصب *muɣtaṣib↑* /n */ raper, rapist.

غ ص ص

غصّة *ɣuṣṣa↑* /n pl *ɣuṣaṣ*/ a choking. ‖*wuguud-i zayy il-ɣuṣṣa f-ɋalb-u* my presence is unbearable to him.

اتغصّ *ʕitɣaṣṣ* /vi/ *[abus]* to be choked. *win-nabi titɣaṣṣ* by the Prophet, may you be choked! may you never say another word! - ava *mitɣaṣṣ*.

غ ص ن

غصن *ɣuṣn↑* /n pl *ʕaɣṣaan, ɣuṣuun*/ branch (of a tree). ‖*ɣuṣn il-baan* epithet for a woman with a slender and graceful figure.

غ ض ب

غضب *ɣiḍib* or *ɣuḍub (a)* /vi/ **1** to become angry. *ɣiḍibt' giddan lamma smiɛt inn il-walad siɋiṭ* I got furious when I heard that the boy had failed (his exam). *wiff-u baayin ɛalee l-ɣaḍab* he looks angry. **2** to become estranged from and leave one's husband. *hiyya baɋa-lha talat ʕasabiiɛ ɣaḍbaana ɛand axuu-ha* she's been three weeks estranged from her husband is and staying at her brother's. - vn *ɣaḍab*; ava *ɣaḍbaan*; pva *maɣḍuub*.

¶ *ɣiḍib ɛala* to turn down, refuse because of being offended. *ɣiḍbit ɛal-ɛariis illi gabuu liha* she turned down the suitor they brought for her. *saaɛit ma yitxaaniɋ yiɣḍab ɛal-ʕakl* whenever he quarrels he refuses to eat. ‖*ʕinta ḥa-tiɣḍab ɛal-bayyaaɛ* ≈ I am not a salesman for you to act so choosy with me! (said, e.g., to one refusing an offer of help).

غضبة *ɣaḍba* /inst n, pl *-aat*/ fit of anger.

غضوبة *ɣuḍuuba* /n/ state of estrangement (between a husband and wife).

غضّب *ɣaḍḍab* /vt/ to cause (one's wife) to leave the house. - vn *taɣḍiib*; ava *miɣaḍḍab*.

اتغضّب *ʕitɣaḍḍab* /vi/ to be caused to leave the house (of a wife by her husband). - iva *mitɣaḍḍab*.

أغضب *ʕaɣḍab* /vt/ to anger, offend. *huwwa-na ɛamalt" ḥaaga tiɣḍib rabb-i-na* did I offend God in any way?

غ ض ر ف

غضروف *ɣaḍruuf* /n pl *ɣaḍariif*/ gristle, cartilage.

غضروفي *ɣaḍruufi, ɣuḍruufi↑* /adj/ gristly, cartilaginous. ‖*ʕinzilaaɋ ɣaḍruufi* slipped disc, intervertebral disc protrusion.

غ ض ض

غضّ *ɣaḍḍ↑ (u): ɣaḍḍ in-naẓar ɛan* to disregard, ignore, forget about. *huwwa laazim yiɣuḍḍ in-naẓar ɛan ir-riḥla di* he should forget about this trip. *qarrart inni ʕaɣuḍḍ in-naẓar ɛan il-ɛariis da* I decided to refuse this suitor. - vn *ɣaḍḍ*; ava *ɣaaḍiḍ*; ava *maɣḍuuḍ*.

¶ *bi-ɣaḍḍ in-naẓar ɛan* regardless of, not to mention.

غ ط ر س

غطرسة *ɣaṭrasa* /n/ arrogance.

مغطرس *miɣaṭras* /adj */ arrogant.

اتغطرس *ʕitɣaṭras* /vi/ to act in a lordly way, swagger, strut. *ʕil-ɛamiil il-mitɣaṭras luu muɛamla xaṣṣa* the snobbish customer is given special treatment. - vn *taɣaṭrus*; ava *mitɣaṭras*.

غ ط س

غطس *ɣiṭis* or *ɣuṭus (a)* /vi/ **1** to submerge, dive. *fiḍilt' ɣaaṭis xamas daɋaayiɋ* I stayed submerged five minutes. *bi-yiɣṭasu min ɛafara mitr* they dive from (a height of) ten metres. **2** to disappear, vanish. *ʕinta ɣaaṭis feen il-mudda di kull-a-ha* where have you been hiding yourself all this time? *ɣiṭis ma-ɋabb'-ʃ* he disappeared without trace. - vn *ɣaṭs*; ava *ɣaaṭis, ɣaṭsaan*.

غطسة *ɣaṭsa* /inst n, pl *-aat*/ a dive.

غاطس *ɣaaṭis* /n/ *[naut]* draught (of a ship).

غطس *ɣuṭs* /n/ a quick swim, dip. *yalla niḍrab ɣuṭs* let's go in for a dip!

الغطاس *ʕil-ɣuṭaas, ʕil-ɣiṭaas* /n/ *[Chr]* Epiphany.

غطيس *ɣaṭiis: ʕiswid ɣaṭiis* pitch black.

غطّاس *ɣaṭṭaas* /n */ **1** diver. ‖*ʕil-mayya tkaddib il-ɣaṭṭaas [prov]* (water gives the lie to the diver) ≈ the proof of the pudding is in the eating. **2** *ʕil-baḥr il-ɣaṭṭaas* the bottomless sea, in the magic formula: *ḥ-armii-k fil-baḥr il-ɣaṭṭaas wi-ma-ykun-lak-ʃ' la manga wala xalaaṣ* ≈ I'll throw thee (i.e. the evil eye) in the deep deep sea and not a soul can rescue thee (used in *raɋw* to ward off the evil eye).

مغطس *maxtas* /n pl *mavaaṭis*/ **1** bathing tank (in a public bath). **2** *[Chr]* baptistry.

غطّس *xaṭṭas* **1** /vt/ to submerge, immerse. *fit-tanṣiir il-qassiis bi-yxaṭṭas il-ɛayyil fil-mayya l-muqaddasa* during the baptism ceremony the priest immerses the baby in the consecrated water. **2** /vi/ to stay away for a while, disappear for some time. *ʃana mif ɛaarif ʃaxuu-ya mxaṭṭas feen baqaa-lu sana* I wonder where my brother has been hiding himself for the past year. - vn *taxṭiis*; ava/pva *mixaṭṭas*.

اتغطّس *ʃitxaṭṭas* /vi/ to be submerged, be immersed. - iva *mitxaṭṭas*.

غ ط ط

غطّ *xaṭṭ (u)* **1** /vt/ to plunge, immerse. *xaṭṭ[i] ʃiid-u fil-ʃakl* he plunged his hand into the food. **2** /vi/ to fall fast asleep. - vn *xaṭṭ, xaṭaṭaan*; ava *xaaṭiṭ*; pva *maxṭuuṭ*.

اتغطّ *ʃitxaṭṭ* /vi/ to be plunged, be immersed. - iva *mitxaṭṭ*.

انغطّ *ʃinxaṭṭ* = *ʃitxaṭṭ*. - iva *minxaṭṭ*.

غ ط ى

غطاء، غطا *xaṭa* /n pl *xuṭyaan*/ **1** lid, cover. *xaṭa qizaaza* a bottle-top. *xaṭa ganziir* a chain-guard. *xaṭa sriir* a bed-cover. ‖*farf[i] w-xaṭa* everything, as in *ʃil-ḥubb[i] liyya l-farf[i] wil-xaṭa* love is what I live for. - *ʃil-biir wi-xaṭaa* (the well and its cover) all the details (of a secret), as in *ʃana ɛaarif il-biir wi-xaṭaa* I know all there is to know about it. **2** *[mus] mawwaal* composed to cap a preceding *mawwaal*.

غطاء *xiṭaaʃ*↑ /n/ cover, protection. *xiṭaaʃ gawwi* air-cover. *xiṭaaʃ in-naqd* currency backing.

غطّى *xaṭṭa* /vt/ **1** to cover. *xaṭṭi nafs-ak kiwayyis laḥsan taaxud bard* cover yourself well or you'll catch cold. *li-xaayit il-mayya ma txaṭṭii tamaam* until the water completely covers it. ‖*taxṭiyyit it-turba [hort]* mulchings. - *kalaam mixaṭṭi* guarded speech. **2** to give cover to, give protection to. *ʃiṭ-ṭayaraan mixaṭṭi g-geef* the air force is providing cover for the army. **3** *[journ]* to provide press coverage for. *miin illi ḥa-yxaṭṭi ʃaxbaar il-ḥadsa* who will cover the news of the accident? **4** to provide financial backing for. - vn *taxṭiyya*; ava/pva *mixaṭṭi*.

اتغطّى *ʃitxaṭṭa* /vi/ **1** passive of *xaṭṭa*. *ʃil-ṭarabeeza mitxaṭṭiyya b-turaab* the table is covered with dust. **2** to cover oneself. *ʃitxaṭṭeet bil-baṭṭaniyya* I covered myself with the blanket. - ava/iva *mitxaṭṭi*.

استغطّى *ʃistaxaṭṭa* /vi/ to cover oneself. *ʃistaxaṭṭa mil-bard* wrap yourself against the cold! *ʃaadi d-dinya - ʃilli yistaxaṭṭa biiha ɛiryaan* that's the world! whoever relies on it for shelter might as well be naked. - ava *mistaxaṭṭi*.

غ ف ر[1]

غفر *xafar[1] (u, i)* /vt/ to grant forgiveness for (s.th.) *ɛaamil kida ɛaʃaan rabb-i-na yuxfur-lu zunuub-u* he does that so that God may forgive his sins. ‖*xafar allaah liina w-lukum* or *xafar allaah zamb-u-kum* or *zamb-u-kum maxfuur* replies to *yirḥam-ak allaah* (said to one who sneezes). - vn *xufraan*; ava *xaafir*; pva *maxfuur*.

اتغفر *ʃitxafar[1]* /vi/ passive of *xafar[1]*. - iva *mitxifir*.

استغفر *ʃistaxfar* /vt/ to ask (God) for forgiveness. *ʃastaxfar allaah* God forgive me! (for doing such a thing, or if I ever did such a thing as you claim). - vn *ʃistixfaar*; ava *mistaxfar*.

غ ف ر[2]

غفر *xafar[2] (u)* /vt/ to guard, watch over. *ʃil-ɛasaakir bi-tuxfur il-maḥallaat bil-leel* the police keep a watch on the shops at night. *ʃil-ɛumda xtaar waaḥid gitta yuxfur-u* the mayor chose a well-built man to be his bodyguard. - vn *xafra*; ava *xaafir*; pva *maxfuur*.

غفير *xafiir* /n pl *xafar, xufara*/ night watchman, guard. *xafar is-sawaaḥil* the coast guards. *feex il-xafar* head watchman, chief guard. ‖*banaat xafar* ugly girls. - *sitt[i] feex xafar* ≈ a battle-axe, an ogress.

اتغفر *ʃitxafar[2]* /vi/ to be guarded, be watched over. - iva *mitxifir*.

غ ف ف

غفّ *xaff (i, u)* /vt/ to trick, take in. *ʃinta faakir ʃinnak ḥa-txiff-i-ni b-kalaam-ak* do you think you're going to take me in with this talk of yours? - vn *xaff, xafafaan*; ava *xaafif*; pva *maxfuuf*.

اتغفّ *ʃitxaff* /vi/ to be tricked, be taken in. *ʃana txaffeet fil-beeɛa di* I was tricked in this deal. - iva *mitxaff*.

انغفّ *ʃinxaff* = *ʃitxaff*. - iva *minxaff*.

استغفّ *ʃistaxaff* = *xaff*. - ava *mistaxaff*.

غ ف ق

غفّق *xaffaq* /vt/ *[constr]* to spread (cement) over bricks preparatory to plastering. - vn *taxfiiq*; ava/pva *mixaffaq*.

اتغفّق *ʃitxaffaq* /vi/ passive of *xaffaq*. - iva *mitxaffaq*.

غ ف ل

غفل *xifil (a)* /vi/ **1** to cease to be aware. *xud baal-ak mil-ḥaraami - law xifilt[a] ɛannu dqiiqa ḥa-yulṭuf maḥfaẓt-ak* watch out for the thief - if you forget him for a minute, he'll swipe your wallet. **2** to nod off, drowse.

ɛeen-i ʔiflit ɛafar daqaayiq I nodded off for ten minutes. *ɛeen-i kaanit lissa ḥa-tiʔfal lamma g-garas ḍarab* I was just about to nod off when the bell rang. - vn *ʔafalaan, ʔafla*; ava *ʔaflaan*.

غفلة *ʔafla* /n/ **1** obliviousness, unawareness. ‖ *ɛala ʔafla* all of a sudden, without warning, as in *daxal ɛala ʔafla* he suddenly came in, *ʃil-ɛarabiyya wiqfit ɛala ʔafla* the car stopped suddenly. - *ɛariis il-ʔafla [deris]* ≈ the sort of bridegroom who could only have been chosen because there was no one else left. **2** /pl *-aat*/ short sleep. *xadt' ʔafla* I took a nap.

غفلان *ʔaflaan* /adj */ dull, oblivious.

غفّل *ʔaffil* **1** /vt/ to fool. *ʃinta ḥa-tiʔaffil miin* who are you trying to fool? **2** /vi/ **2a** to close in drowsiness (of the eye). **2b** to drowse, nod off. *ʔaffilit wi-hiyya bi-titfarrag ɛat-tilivizyoon* she nodded off while watching the television. - vn *taʔfiil*; ava/pva *miʔaffil*.

تغفيل *taʔfiil* /n/ dullness of wit, stupidity.

مغفّل *muʔaffal* /adj */ dull, dim-witted. *ya muʔaffal (ɛala ɛenee-k)* you dimwit! *law kunna muʔaffaliin kaan yixuff" ɛaleena k-kalam-da* if we were dumb we'd believe that.

اتغفّل *ʃitʔaffil* /vi/ to be fooled. - iva *mitʔaffil*.

استغفل *ʃistaʔfil* /vt/ **1** to select for dimwittedness. **2** to consider dimwitted. — /vi/ **3** to act the dimwit. - vn *ʃistiʔfaal*; ava *mistaʔfil*.

غ ف و

غفى *ʔifi (a)* /vi/ to nod off, snooze. *yadoob ʔifiit it-tilifoon ḍarab* I'd hardly nodded off when the telephone rang. - vn *ʔafw*; ava *ʔaafi*.

غفوة *ʔafwa'* /n pl *-aat*/ nap, short sleep. *ḥ-axud-li ʔafwa* I'm going to take a nap.

غ ل ب

غلب *ʔilib* or *ʔulub (a)* /vi/ to suffer inconvenience or hardship. *miʃ ḥa-tiʔlab* it's no trouble. *ʔilibt' min kuwafeer li-kwafeer* I went through a lot trying to find a decent hairdresser. *ʔilbit min il-ɛilaag ɛand il-ḥukama w-raaḥit il-mustaffa* she suffered so much being treated by doctors that she (gave up and) went to the hospital. ‖ *ʔilib ḥumaar-i* I give up, I'm stumped. - vn *ʔulb*; ava *ʔalbaan*.

غلب *ʔalab (i)* /vt/ **1** to overcome, gain domination over. *ʃin-noom ʔalab-ni* sleep overcame me. *ʃiṭ-ṭabɛ' yiʔlib it-taṭabbuɛ [prov]* nature is stronger than nurture. *ʃil-bayyaaɛ kaan ɛaawiz yiffaṭṭar ɛalayya laakin ʔalabt-u* the salesman tried to outsmart me but I got the better of him. **2** to win. *miin ʔalab il-matf' da* who won the match? ‖ *ʃilli tiʔlib-bu ʃilɛab-bu [prov]* (what you win with, play with) ≈ (1) gamble only with your winnings. (2) choose the method most likely to achieve your ends. - *maʔluub ɛala ʃamr-u* resigned, helpless. — /vi/ **3** to preponderate. *yiʔlib ɛala ẓann-i ʃinn' ʃaxuu-k huwwa lli xad-u* I am almost sure it is your brother who took it. - vn *ʔalabaan*; ava *ʔaalib*; pva *maʔluub*.

غلب *ʔulb* /n/ inconvenience, hardship, suffering. *rabb-i-na yaxd-u ɛafaan nirtaaḥ minnu w-min ʔulb-u* may Our Lord relieve us of him so that we may be free of him and all the bother he causes! *ya ʔulb-i y-aani* O Lord, I suffer! oh misery me! *ruḥt is-sinima ʃasallı ʔulb-i fwayya* I went to the cinema to forget my troubles for a while.

غلبان *ʔalbaan* **1** /adj * and pl *ʔalaaba*/ **1a** poor, needy. *ʃana ʔalbaan miʃ laaqi luqmit il-ɛeef* I'm a poor man who can hardly find a bite to eat. **1b** wretched, miserable. *di bitt' ʔalbaana w-maksuurit il-ginaaḥ* she's a poor, defenceless girl **2** /n * and pl *ʔalaaba*/ **2a** poor man, pauper. *niswaan il-ʔalaaba bi-yiftaʔalu fil-ʔeeṭ* the womenfolk of the poor work in the fields. **2b** poor soul, unfortunate wretch. *ʃir-raagil kaan wiff' sguun wi-ma-yiffaṭṭar-f' ʃilla ɛala l-ʔalaaba* the man was a jail-bird and used to take advantage only of the poor wretches who couldn't defend themselves.

غالب *ʔaalib* **1** /n/ preponderance. ‖ *ʃil-ʔaalib ʃinn ...* it is probable that . .. *fil-ʔaalib* (1) usually, for the most part, as in *ʃil-biyuut ig-gidiida fil-ʔaalib tibqa dayyaqa* modern houses are usually small. (2) probable. *fil-ʔaalib ḥa-ysaafir bukra* he'll probably leave tomorrow. **2** /n */ winner *ʃir-riyaaḍa ʔaalib wi-maʔluub* there's a winner and loser in every game.

¶ *ʔaalıban* /adv/ = *fil-ʔaalib*.

غلبه *ʔalaba* /n/ **1** inconvenience, bother, trouble. *ʃana muta'ʃassif ɛala l-ʔalaba di* I'm sorry for (causing) this inconvenience. *di b-taaxud ʔalaba kbiira* it puts one to a lot of trouble. **2** idle chatter, prattle. *balaaf ʔalaba ɛaṣ-ṣubḥ* cut out all this prattle first thing in the morning! **3** fussy interfering, overbearing noseyness. ‖ *ʃil-ʔalaba luha ʃaḥkaam [prov]* ≈ there is no real defence against nosey people.

غلباوى *ʔalabaawi* /adj */ **1** talkative. *di ʔalabawiyya b-fakl* she's such a chatterbox! **2** fussily interfering, overbearingly nosey.

أغلب *ʃaʔlab* /el, in constr/ most of, the greater portion of, the majority of. *ʃaʔlab ik-kutub naqṣa* most of the books are lacking. *ʃaʔlab sukkan-ha mil-ɛummaal* most of its inhabitants are labourers. *fi-ʃaʔlab il-ʃaḥyaan* more often than not. *fi-ʃaʔlab il-ḥalaat* in most cases.

¶ *fil-ʕaɣlab* /adv/ (1) in most cases, usually. *bi-yiḥṣal fil-ʕaɣlab ʕinn il-ḥagga b-tilbis hiduum beeḍa* it is usual for a woman pilgrim to dress in white garments. (2) probably. *fil-ʕaɣlab miʃ ḥ-aqdar ʕaagi badri* I shall probably not be able to come early.

أغلبيّه *ʕaɣlabiyya* /n/ majority, greater portion. *ʕaɣlabiyyit il-ʕaṭaal min silk ik-kahraba* most of the breakdowns are owing to the electric wire. *ʕintuxib bi-ʕaɣlabiyya* he was elected by a majority. ‖*fil-ʕaɣlabiyya* (1) in most cases, usually. *fil-ʕaɣlabiyya l-maṣriyyiin bi-yfaḍḍalu l-xilfa ṣubyaan* Egyptians usually prefer to have male children. (2) probably. *fil-ʕaɣlabiyya d-dinya ḥa-tmaṭṭar in-nahar-da* it will probably rain today.

غلاّب *ɣallaab* /adj/ all-powerful, overwhelming. *ʕiṭ-ṭabɛ' ɣallaab* nature dominates nurture. *ʕil-hawa ɣallaab* love conquers all.

اتغلب *ʕitɣalab* /vi/ passive of *ɣalab*. - iva *mitɣilib*.

انغلب *ʕinɣalab* = *ʕitɣalab*. - iva *minɣilib*.

غلّب *ɣallib* /vt/ **1** to inconvenience, give trouble to. *ɛaawiz tisaafir bil-ɛarabiyya xud-ha laakin ḥa-tɣallib-ak fiwayya* if you want to go in the car, take it, but it will give you some trouble. *ɛayaa ɣallib-na* his illness has put us to a lot of trouble. **2**↑ to give greater weight to, consider preponderant. *ɣallibna l-iḥtimaal da ɛala l-iḥtimaal da* we gave greater weight to this probability than to that. - vn *taɣliib*; ava/pva *miɣallib*.

اتغلّب *ʕitɣallib* /vi/ **1** to gain mastery, triumph. *lamma yitɣallib ɛalee ṭabɛ-u ya ḥafiiẓ* when his (baser) nature gets the better of him, Lord protect us! *ʕitɣallibit ɛalee fahwit-u fa-ma-qdir-ʃ' yḥuuf nafs-u* his lust overcame him and he couldn't control himself. **2** to be put to inconvenience, be put to trouble. *yaama tɣallibt' f-ḥayaat-i* how much trouble I've had to put up with in my life! - vn *taɣallub*↑; ava/pva *mitɣallib*.

اتغالب *ʕitɣaalib* /vi/ **1** to talk at great length but to little point. **2** to be fussy and nosey and pretend to know a great deal. *qaɛad yitɣaalib ɛaleeha w-lamma ga door-u ma-ɛrif-ʃ' yiɛmil ḥaaga* he kept on giving her advice but when his turn came he couldn't do a thing. - iva *mitɣaalib*.

استغلب *ʕistaɣlib* **1** /vt/ to select for helplessness. **2** /vi/ to act the weakling. - vn *ʕistiɣlaab*; ava *mistaɣlib*.

غ ل ت

غلت، غلث *ɣalat* /coll n/ **1** weeds. **2** impurities (in, e.g., grain).

غلة، غلتة *ɣalata* /unit n, pl *-aat*/ **1** a weed. **2** an impurity.

غلتاية *ɣalataaya* = *ɣalata*.

غلّت *ɣallit* /vt/ **1** to make weedy. **2** to weed (e.g., a field). *baɛd ir-ruzz ma yzarraɛ laazim tiɣallit-u* after the rice has sprouted you should weed it. — /vi/ **3** to become full of weeds. *ʕir-ruzz' maa-lu ɣallit kida* why has the rice become so full of weeds? - vn *taɣliit*; ava/pva *miɣallit*.

اتغلّت *ʕitɣallit* /vi/ passive of *ɣallit*. - iva *mitɣallit*.

غ ل ث see غ ل ت

غ ل س

غلس *ɣilis* /adj */ **1** obnoxious, irritating. **2** insensitive, crass.

غلاسة *ɣalaasa* /n/ **1** obnoxiousness. **2** insensitivity, crassness.

غلّس *ɣallis* /vi/ **1** to behave obnoxiously or irritatingly. **2** to behave insensitively or crassly. - vn *taɣliis*; ava *miɣallis*.

اتغلّس *ʕitɣallis* /vi/ (impersonal) passive of *ɣallis*. *ʕitɣallis ɛalayya* people were obnoxious to me. - iva *mitɣallis*.

استغلس *ʕistaɣlis* /vt/ **1** to consider obnoxious. **2** to select for obnoxiousness. — /vi/ to behave obnoxiously. - ava *mistaɣlis*.

غ ل ظ see غ ل ض

غ ل ط

غلط *ɣiliṭ* or *ɣuluṭ (a)* /vi/ to err, make a mistake. *ḥaasib tiɣlaṭ fil-ɛadd* take care not to make a mistake in counting! *ʕana ɣliṭt' fis-sikka* I took the wrong way. *miin il-ɣalṭaan* who's at fault? who's the culprit? - vn *ɣalaṭ*; ava *ɣalṭaan*.

¶ *ɣiliṭ fi-* or *ɣuluṭ fi-* (1) to wrong, offend against. *ɣiluu f-ḥaqq-i* they wronged me. (2) to insult, be rude to. *ɛeeb - da ʕaxuu-k ik-kibiir ma-tiɣlaṭ-ʃ' fii* shame! he's your older brother and you shouldn't be rude to him.

غلط *ɣalaṭ* **1** /vn/ ‖ *ʕil-ɣalaṭ marduud* ≈ no offence meant! **2** /n pl *-aat*/ error, mistake. *law waaḥid ḥaṣal minnu ʕayy' ɣalaṭ ḥa-yitrifid* if anyone does anything wrong, he'll be sacked. **3** /adj invar/ incorrect, wrong, mistaken. *da taṣarruf ɣalaṭ* this is the wrong way to behave, *nimra ɣalaṭ* a wrong (telephone) number. **4** /adv/ incorrectly. *bi-tiɛmil if-ʃuɣl' ɣalaṭ* you are doing the work wrongly.

غلطة *ɣalṭa* /inst n, pl *ɣalaṭaat*/ mistake, error. *wiqiɛ fi-ɣalṭa* he slipped up. *ʕahi ɣalṭa w-miʃ ḥa-tikkarrar* it was indeed a mistake but it won't be repeated.

غلّاط *ɣallaaṭ* /adj */ foul-mouthed, rude. ‖*liʕbit il-ɣallaaṭa* card game in which the player tries to take as few cards as possible and discard as many as possible.

غلّط *ɣallaṭ* /vt/ **1** to attribute error to, accuse of being in the wrong. *tiɣallaṭ-ni ʕana leeh ʕiza kaan huwwa lli ɣalṭaan* why do you say I'm in the wrong when it's him? **2** to cause to make a mistake, confuse. *ɣallaṭ-ni min kutr' kalaam-u w-ʕana b-aftaɣal* he made me make a mistake by talking so much while I was working. - vn *taɣliiṭ*; ava/pva *miɣallaṭ*.

اتغلّط *ʔitɣallaṭ* /vi/ **1** to be accused of being in the wrong. **2** to be caused to make a mistake, be confused. - iva *mitɣallaṭ*.

غالط *ɣaaliṭ* /vt/ to cheat, deceive (s.o., over a bill or the like). *ʕig-gazzaar ɣaliṭ-ni f-sabʕiin ʔirf* the butcher swindled me out of seventy piastres. *ma-tɣaliṭ-f' fik-kalaam* don't twist the conversation! - vn *miɣalṭa*; ava *miɣaaliṭ*.

اتغالط *ʔitɣaaliṭ* /vi/ to be cheated, be swindled. -iva *mitɣaaliṭ*.

استغلط *ʔistaɣlaṭ* /vt/ to consider in the wrong. *kull-i-na staɣlaṭnaa-k fik-kalaam illi ʔult-u* we all thought you were wrong in what you said. - vn *ʔistiɣlaaṭ*; ava/pva *mistaɣlaṭ*.

غ ل ظ

غلظ *ɣiliẓ* or *ɣuluẓ (a)* (also *ɣiliḍ*↓ or *ɣuluḍ*↓) /vi/ **1** to become deep, break (of a voice). **2** to become thick, bulky or heavy. **3** to become coarse or crass. *ʕaxuu ṭabʕ-u ɣuluẓ* his brother has become coarse-natured. - vn *ɣalaaẓa*; ava *ɣalẓaan*.

غلاظة *ɣalaaẓa* (also *ɣalaaḍa*↓) /n/ **1** deepness (of sound). **2** thickness. **3** coarseness, crassness.

غليظ *ɣaliiẓ* (also *ɣaliiḍ*↓) /adj pl *ɣulaẓa*/ **1** thick and heavy. *ʃuuma ɣaliiẓa* a stout cudgel. ‖*ʔalb-u ɣaliiẓ* he's hard-hearted. - *ʕil-muʂraan il-ɣaliiẓ [anat]* the large intestine. **2** deep, bass (of sound).

أغلظ *ʔaɣlaẓ* (also *ʔaɣlaḍ*↓) /el/ thicker/thickest, deeper/deepest etc.

مغلّظ *muɣallaẓ: yamiin muɣallaẓ*↑ a binding oath. *nagaasa mɣallaẓa* (1) *[Isl]* something (e.g., faeces) contact with which constitutes a major ritual impurity. (2) something filthy and disgusting. *dool nagaasa mɣallaẓa* they're real dirt.

اغلظّ *ʔiɣlaẓẓ* = *ɣiliẓ*. - ava *miɣlaẓẓ*.

غ ل غ ل

اتغلغل *ʔitɣalɣil* /vi/ to penetrate. *fii talat dabbabaat tɣalɣilit fi-xṭuuṭ il-ʕaduw* there are three tanks that have penetrated behind enemy lines. *ʕil-ħaḍaara l-faransiyya tɣalɣilit fi-maṣr* French culture spread in Egypt. - vn *taɣalɣul*; ava *mitɣalɣil*.

تغلغل *taɣalɣal*↑ = *ʔitɣalɣil*. - vn *taɣalɣul*; ava *mutaɣalɣil*.

غ ل ف

غلفة *ɣalafa* /n pl *-aat*/ foreskin, prepuce. - also *ʔalafa*.

غلاف *ɣilaaf, ɣulaaf* /n pl *-aat, ɣilfa, ʔiɣlifa, ʕaɣlifa*↑/ cover, wrapper, casing. *ɣilaaf kitaab* book jacket. *ɣilaaf ʔisṭuwaana* record sleeve. *ɣilaaf dura* outer covering of a corn-cob.

غلّف *ɣallif* /vt/ to wrap, encase. *ʕaayiz ʕaɣallif ik-kitaab ʕafaan ma-yixsar-ʃ* I want to cover the book so that it doesn't get spoilt. - vn *taɣliif*; ava/pva *miɣallif*.

اتغلّف *ʔitɣallif* /vi/ to be wrapped, be encased. *ʔil-ʕidaan bi-titɣallif bi-ʔalwaaḥ il-markib* the ribs are encased by the planks of the boat. - iva *mitɣallif*.

غ ل ق ¹

مغلق *maɣlaq* /n pl *maɣaaliq*/ timber store.

غلّق *ɣallaq* /vt/ **1** to shut, close. *ɣallaqu l-maḥallaat kull-a-ha* they closed down all the shops. — /vi/ **2**↓ to finish all one's supplies, sell out. *ɣalaaṣ ɣallaqna* we're completely sold out. **3** to become hoarse (of the voice). *ṣoot-i ɣallaq mit-tahliil* my voice went hoarse with cheering. - vn *taɣliiq*; ava/pva *miɣallaq*.

اتغلّق *ʔitɣallaq* /vi/ to be shut, be closed. - iva *mitɣallaq*.

غ ل ق ²

غلق *ɣalaq* /n pl *ɣulqaan, ɣulúqa, ɣilíqa*/ **1** small palm basket with handles (see Pl.B, 5). **2** oaf, twit.

غلّاق *ɣallaaq* /n pl *ɣallaaqa*/ one (e.g., a street-sweeper) who works with a *ɣalaq*.

غ ل ل ¹

غلّ *ɣall'* *(i)* /vt/ to yield. *ʕil-faddaan mil-ʔamḥ il-maksiiki bi-ɣyill' xamastaafar ʕardabb' w-ʕaktar* each feddan of Mexican wheat yields fifteen ardebs and more. - ava *ɣaalil*.

غلّة *ɣalla'* /coll n/ **1** wheat. **2** yield (of a grain crop).

غلال *ɣilaal*↑ /pl n/ grains, cereals.

استغلّ *ʔistaɣall* /vt/ to utilize, take advantage of, exploit. *ʔis-sadd il-ʕaali ymakkin-na min istiɣlaal iṣ-ṣaḥra* the High Dam enables us to exploit the desert. *ʔistaɣalleet il-furṣa* I exploited the opportunity. *ʔistaɣallit noom-i w-xaragit* she took advantage of my being asleep and left. - vn *ʔistiɣlaal*; ava *mistaɣall, mustaɣill*.

استغلالي *ʔistiɣlaali* /adj * and pl *-yya*/ exploitative.

غ ل ل ²

غلّ ɣall² (i) /vt/ to irritate, anger, annoy. *ma-bi-yɣill[i]-nii-ʃ qadd[i] ʃtimt-u fiyya* nothing infuriates me like his insults. - vn *ɣall*; ava *ɣaalil*; pva *maɣluul*.

غلّ ɣill /n/ ill-temper, spleen, rancour. *faʃʃeet ɣill-i f-miraat-i* I took my ill-temper out on my wife.

غلّاوى ɣillaawi /adj */ ill-tempered, splenetic, rancorous.

غليل ɣaliil = ɣill.

اتغلّ ʔitɣall /vi/ to be irritated, be angered, be annoyed. - iva *mitɣall*.

غ ل ل ايّ

غلّاية ɣallaaya[1] /n pl -aat/ *[print]* galley.

غ ل و see غ ل ى [1] and غ ل ى [2]: ɣalwa, ɣalaawa

غ ل و ش

غلوش ɣalwiʃ /vi/ **1** to make a loud noise in order to drown a softer one. *ɣalwiʃu ʕalayya fik-kalaam* they raised their voices so that my words couldn't be heard. *ʔir-radyu fii ɣalwaʃa* the radio is crackling. **2** to become muffled or fuzzy. *ʕeen-i ɣalwiʃit* my eyes became blurred. *ʔir-radyu ɣalwiʃ* the sound of the radio became indistinct. - vn *ɣalwaʃa*; ava *miɣalwiʃ*.

اتغلوش ʔitɣalwiʃ /vi/ **1** (impersonal) passive of *ɣalwiʃ* 1. *kull[i] ma kunt[i] b-aḥaawil ʔakkallim kaan bi-yitɣalwiʃ ʕalayya* every time I tried to talk I was shouted down. **2** to become muffled or blurred. - ava/iva *mitɣalwiʃ*.

غ ل ى [1]

غلى ɣili[1], ɣala[1] *(i)* /vi/ **1** to boil. *siib il-mayya tiɣli* leave the water to boil. **2a** to boil with anger. *qalb-i ɣili* I got furious. **2b** to bustle with activity. *ʔin-nahar-da l-burṣa b-tiɣli wiʃ-ʃuɣl[a] ʕala widn-u* today the Stock Exchange is humming with activity and the work never lets up. - vn *ɣalayaan*; ava *ɣaali, ɣalyaan*.

غلى ɣala² *(i)* /vt/ to boil. *ɣalet-laha kubbaayit ḥilba* I boiled her a glass of fenugreek. ‖ *ʔinta ya si zift[i] maɣli* you, you dirty rotter! - vn *ɣaly, ɣalayaan, ɣaliyya*; ava *ɣaali, ɣalyaan*; pva *maɣli*.

غليّة ɣaliyya **1** /vn/ ‖*mayyit il-ɣaliyya* water in which laundry has been boiled. *ʕaṣaayit il-ɣaliyya* laundry stick (for stirring and extracting items from the copper). **2** /n/ laundry that is boiled (usually the white articles).

غلوة ɣalwa /inst n, pl -aat/ a boiling. *ʔil-ʕads il-muḥtaram yistiwi qawaam-ak min ɣalwa waḥda* good quality lentils cook straight off with one boiling. ‖*ma-yaxud-ʃ[i] ɣalwa* it doesn't require much effort, as in *ʔid-dars il-ʔawwal ma-xad-ʃ[i] ɣalwa mʕaaya* the first lesson didn't cause me much trouble, *ʔinta ma-taxud-ʃ[i] ɣalwa mʕaaya* you're no match for me!

غلّاية ɣallaaya² /n pl -aat/ **1** pot for boiling, kettle. **2** boiler (e.g., in a steam engine).

اتغلى ʔitɣala /vi/ to be boiled. - iva *mitɣili*.

غ ل ى ²

غلى ɣili² *(a)* /vi/ **1** to go up in price, become more expensive. *ʔugrit id-dukkaan ɣilyit* the rent for the shop went up. *kull[a] ḥaaga fid-dinya ɣilyit ɣeer iṭ-ṭurfi* everything in the world's gone up, except pickles. *qult-i-lu b-kaam da - qal-li ma-yiɣlaa-ʃ ʕaleeki ya nawwaara* I asked him, 'How much is that?' He replied, 'For you, blossom, not too much.' **2** to become dear, become beloved. *ɣilyit fi-ʕenay-ya* she became dear in my sight. - vn *ɣiliww, ɣuluww, ɣala, ɣalaawa*; ava *ɣaali*.

غلا، غلاء ɣala[3], ɣalaaʔ /n/ expensiveness. *ʕalaawit il-ɣala* cost of living allowance. *ɣalaaʔ il-maʕiiʃa* the high cost of living. ‖*ḥagaat bi-titbaaʕ bil-ɣala* things sold at high prices.

غلاوة ɣalaawa /n/ dearness, preciousness. ‖*wi-ḥayaat ɣalawt-ak* by your dearness to me! by the love I have for you!

غالى ɣaali /adj */ **1** expensive. *bi-ybiiʕ bil-ɣaali* he sells at a high price. ‖ *ʔil-ɣaali taman-u fii [prov]* ≈ it pays to buy the best. - /adverbially/ *bi-ybiiʕ ɣaali* (1) he sells at a high price. (2) he plays hard-to-get. **2** dear, treasured, cherished. ‖*ɣaali wiṭ-ṭalab rixiiṣ [prov]* you are so dear that anything you ask for seems cheap.

أغلى ʔaɣla /el/ **1** more/most expensive. *bi-ybiiʕ ʔaɣla mis-suuq* he sells at a higher price than the market. **2** more/most cherished, more/most dear. *da ʔaɣla ʕalayya min naẓar-i* he is more precious to me than my sight.

مغلوانى miɣlawaani or maɣlawaani /n pl -yya/ one who overcharges.

غلّى ɣalla² /vt/ to raise, push up (prices). *ʔil-ʔazma ɣallit il-ʔasʕaar* the shortage pushed prices up. - vn *taɣliyya*; ava/pva *miɣalli*.

اتغلّى ʔitɣalla /vi/ to be raised (of prices). - iva *mitɣalli*.

غالى ɣaalaʔ /vi/ to go to excess. *ma-tɣalii-ʃ fil-ʔasʕaar* don't ask for exorbitant prices. - vn *muɣalaah*; ava *miɣaali*.

اتغالى ʔitɣaala /vi/ **1** = ɣaala. **2** (impersonal) passive of *ɣaala*. *ʔil-mawḍuuʕ itɣaala fii ẓyaada ʕan il-lizuum* the matter was much exaggerated. - iva *mitɣaali*.

استغلى ʔistaɣla /vt/ **1** to consider (too) expensive. *ʔistaɣleena g-gild[i] fa-ʃtareena l-bilastik* we thought the leather was too expensive so we bought the plastic. **2** to

select for expensiveness. *ʃistaɣla wi-ʃtiri* choose the most expensive and buy (it). - vn *ʃistiɣla*; iva *mistaɣli*.

غ ل ى [3] see غ ل ل ا ى : *ɣallaaya'*

غ ل ى و ن
غليون *ɣalyuun* /n/ **1** smoker's pipe. **2** /pl *ɣalayiin*/ *[obsol]* galleon.

غ م ر [1]
غمر *ɣamarʔ (u)* /vt/ **1** to overwhelm. *ɣamaruu-ni b-riʕayit-hum* they overwhelmed me with care. **2** *[text]* to steep (cloth). **3** to flood. *ʃin-nahr' faaq wil-mayya ɣamarit ʃaraaqi ktiira* the river overflowed and the water flooded a lot of land. - vn *ɣamr, ɣamaraan*; ava *ɣaamir*; pva *maɣmuur*.
مغمور *maɣmuurʔ* /adj */ obscure, little-known. *kaatib maɣmuur* an obscure writer.
اتغمر *ʃitɣamar* /vi/ passive of *ɣamar*. - iva *mitɣimir*.
غمّر *ɣammar'* /vt/ to flood, inundate. *ʃin-nahar-da l-muzaariʕ bi-yɣammar il-ʃarq' marra waḥda biṭ-ṭurumbaat* today the farmer floods the land at one go with pumps. - vn *taɣmiir*; ava/pva *miɣammar*.
اتغمّر *ʃitɣammar'* /vi/ to be flooded, be inundated. - iva *mitɣammar*.

غ م ر [2]
غمر *ɣumr, ɣimr* /n pl *ɣimaar*/ *[rur]* stook, shock (e.g., of straw, clover).
غمّر *ɣammar²* /vt/ to pile (e.g., straw, clover) into stooks or shocks. - vn *taɣmiir*; ava/pva *miɣammar*.
اتغمّر *ʃitɣammar²* /vi/ passive of *ɣammar²*. - iva *mitɣammar*.

غ م ر [3]
غامر *ɣaamir* /vi/ to take risks. *ʃil-waaḥid bi-yɣaamir bi-ḥayaat-u ʕafaan yiʕaddi f-faariʕ* one takes one's life in one's hands to cross the street. - vn *muɣamra*; ava *miɣaamir*.
مغامرة *muɣamra* /n pl *-aat*/ **1** risk, hazard. *balaaf tiʕmil muɣamraat wi-tnuṭṭ' min il-qaṭr' w-huwwa maaʃi* don't take risks by jumping from the train while it's moving. **2** escapade, adventure.
مغامر *muɣaamir* /adj */ adventurous.

غ م ز
غمز *ɣamaz (i)* /vt/ **1** to nudge. *ɣamazit-ni ʕafaan m-atkallim-ʃ* she gave me a nudge to stop me speaking. **2** to make a furtive passing-on (of s.th.) to (s.o.). *ɣamazt-u b-gineeh* I slipped him a pound. — /vi/ **3** to wink. *bi-tiɣmiz li-miin* who are you winking at? *ʃiṣ-ṣunnaara ɣamazit* (1) the fishing-line twitched. (2) the victim has been hooked. - vn *ɣamz, ɣamazaan*; ava *ɣaamiz*; pva *maɣmuuz*.
غمزة *ɣamza* /pl *-aat*/ instance noun of *ɣamz*.
غمّاز *ɣammaaz* /n pl *-aat*/ **1** blinker (light). **2** fishing float.
غمّازة *ɣammaaza* /n pl *-aat*/ **1** dimple. **2** *[mus]* (finger) key (of an instrument).
اتغمز *ʃitɣamaz* /vi/ passive of *ɣamaz*. - iva *mitɣimiz*.
انغمز *ʃinɣamaz* = *ʃitɣamaz*. - iva *minɣimiz*.
غمّز *ɣammiz* /vt/ to nudge repeatedly. - vn *taɣmiiz*; ava/pva *miɣammiz*.
اتغمّز *ʃitɣammiz* /vi/ to indicate one's scorn by winking and nudging. *ʃin-naas kull-a-ha b-titɣammiz wi-titlammiz ʕaleeha* everyone's sneering at her and finding fault. - iva *mitɣammiz*.

غ م س
غمس *ɣamas (i)* /vt/ to dip. *ʃiɣmis il-muus fil-muṭahhir qabl' ma tiḥlaq bii* dip the razor in antiseptic before you shave with it. - vn *ɣams*; ava *ɣaamis*; pva *maɣmuus*.
غموس *ɣumuus* /n/ **1** eating of food using a piece of bread as a sop. **2** food eaten using a piece of bread as a sop. *min istaktar ɣumuus-u kal ḥaaf [prov]* (he who revels in the abundance of food he has to eat with his bread will one day have only dry bread to eat) ≈ extravagance leads to ruin.
اتغمس *ʃitɣamas* /vi/ to be dipped. - iva *mitɣimis*.
انغمس *ʃinɣamas* = *ʃitɣamas*. ‖ *ʃinɣimaas is-salaṭiin fil-malazzaat* the sultans' wallowing in pleasures. - vn *ʃinɣimaas*; iva *minɣimis*.
غمّس *ɣammis* /vt/ to eat (food) using a piece of bread as a sop. *bi-yɣammis il-fuul* he eats the beans by dipping bread into them. ‖ *sigaara miɣammisa [slang]* cigarette packed with hashish. - vn *taɣmiis*; ava/pva *miɣammis*.
اتغمّس *ʃitɣammis* /vi/ to be eaten with bread as a sop. *ʃiḥna l-ɣalaaba lli b-niksab luqmit-na mitɣammisa bil-ʕaraq* we are the poor whose daily bread is sopping with the sweat of our brows. - iva *mitɣammis*.

غ م ض
غمض *ɣimiq (a)* /vi/ **1** to close (of the eyes). **2** to become vague or mysterious. - vn *ɣamaqaan*; ava *ɣaamiq, ɣamqaan*.
غمض *ɣamaq (u)* /vt/ to close (the eyes). *ʕeen-i ma-ʃafit-ʃ il-ɣamq* I didn't get a wink of sleep. - vn *ɣamq*; ava *ɣaamiq*; pva *maɣmuuq*.
غمضة *ɣamqa* /pl *-aat*/ instance noun of *ɣamq*. ‖ *fi-ɣamqit ʕeen* in the twinkling of an eye.

غامض *ɣaamiḍ* /adj */ obscure, mysterious. *ḥikaaya ɣamḍa* mysterious affair.

غمّيضى *ɣummeeḍi* /adv/ with the eyes closed, blindly. *bi-yiʃtiri ɣummeeḍi* he buys without inspecting the goods. *miʃ maʕquul waaḥid zayyak yiggawwiz ɣummeeḍi* it is inconceivable that someone like you should marry without first knowing the girl.

غمّض *ɣammaḍ* /vt/ **1** to close (the eyes). *ma-ḍdirt'-ʃ ʃaɣammaḍ ʕeen-i wala sanya* I couldn't catch a wink of sleep. ‖ *ɣammaḍ ʕeen-(u) ʕan* to ignore, overlook. *-zayy il-ḍuṭṭa l-miɣammaḍa* (as innocent) as a blind kitten. **2** to blindfold. — /vi/ **3** to close (of the eyes). - vn *taɣmiiḍ*; ava/pva *miɣammaḍ*.

اتغمّض *ʃitɣammaḍ* /vi/ **1** to be closed (of the eyes). **2** to be blindfolded. - iva *mitɣammaḍ*.

غ م ق ١

غمق *ɣimiḍ* or *ɣumuḍ (a)* /vi/ to turn dark, darken. *ʃil-ḍumaaf bi-yiɣmaḍ lamma tbill-u* the cloth turns a darker shade when you wet it. - vn *ɣamaḍaan, ɣumuḍiyya*; ava *ɣamḍaan*.

غامق *ɣaamiḍ* **1** /adj/ dark (of colour). *ʃaxḍar ɣaamiḍ* dark green. **2** *ɣawaamiḍ* /pl n/ dark-coloured items. *ʃiɣsili l-ɣawaamiḍ li-waḥdii-ha* wash the dark-coloured things separately.

أغمق *ʃaɣmaḍ* /el/ darker/darkest (in colour). *ʕayza loon ʃaɣmaḍ* I want a darker colour. *da ʃaɣmaḍ fi-xuḍrit-u ʕan il-maṣri* this is a darker green than the Egyptian type.

غمّق *ɣammaḍ* **1** /vt/ to make darker, darken. *ɣammaḍ il-ʃarḍiyya ʕaʃaan ir-rasma tbaan* darken the background so that the design stands out. **2** /vi/ to turn dark. - vn *taɣmiiḍ*; ava *miɣammaḍ*.

اتغمّق *ʃitɣammaḍ* /vi/ to become or be made darker. - ava/iva *mitɣammaḍ*.

اغمقّ *ʃiɣmaqq* = *ɣimiḍ*. - ava *miɣmaqq*.

استغمق *ʃistaɣmaḍ* /vt/ **1** to select for darkness. **2** to consider (too) dark. - vn *ʃistiɣmaaḍ*; ava *mistaɣmaḍ*.

غ م ق ٢

غمقيّه *ɣumḍiyya* (also *ɣunḍiyya*) /n pl *ɣamaaḍi, ɣanaaḍi*/ *[naut]* one of the short ribs on either side of a stem.

غ م م

غمّ *ɣamm'* *(u)* /vt/ **1** to depress, make gloomy. *ʃil-ḥikaaya di ɣammit-ni* this affair depressed me. *manẓar yiɣumm* a depressing sight. **2** to revolt, sicken. *riiḥa tɣumm* a revolting smell. - vn *ɣamm, ɣamamaan*; ava *ɣaamim*; pva *maɣmuum*.

¶ *ʃin-nifs' ɣammit ʕala* ... a feeling of queasiness overcame .... *nifs-a-ha ɣammit ʕaleeha* she felt queasy.

غمّ *ɣamm²* /n/ depression, gloom. *ʃakl-ak baayin ʕalee l-ɣamm* you look depressed. *ḥa-tiqlibi l-qaʕda ɣamm* are you going to spoil the gathering with your gloominess?

غمّة *ɣamma'* /n pl *-aat*/ instance noun of *ɣamm*.

غمامه *ɣimaama, ɣumaama↑* /n pl *-aat*/ **1** blindfold. **2** obstruction to the sight. *ʃana ḥaasis zayy' ma ykuun fii ɣimaama ʕala ʕeen-i* I feel as though something is clouding my vision.

غمام *ɣamaam* /coll n/ clouds.

غمامة *ɣamaama* /unit n, pl *-aat*/ a cloud. ‖ *ʃil-muẓallal bil-ɣamaama* the One Shaded by the Cloud (epithet of the Prophet Muhammad).

اتغمّ *ʃitɣamm* /vi/ to feel depressed, feel sad. - ava *mitɣamm*.

انغمّ *ʃinɣamm* = *ʃitɣamm*. - ava *minɣamm*.

غ م ى

غمى *ɣumi (i): ɣumi ʕalee (ʕaleeha, ʕaleehum* etc.) he (she, they etc.) fainted. *ɣumi ʕala ʃuxt-i lamma simʕit il-xabar* my sister fainted when she heard the news.

غمى *ɣuma* /n/ blindfold for an animal (worn, e.g., when turning a water-wheel).

غمّى *ɣamma²* /vt/ to blindfold, blinker. - vn *taɣmiyya*; ava/pva *miɣammi*.

مغمّى *miɣammi* /adj */ **1** blindfolded, blinkered. **2** inexperienced, naive.

اتغمّى *ʃitɣamma* /vi/ to be blindfolded, be blinkered. - iva *mitɣammi*.

أغمى *ʃuɣma: ʃuɣma ʕalee (ʕaleeha, ʕaleehum* etc.) he (she, they etc.) fainted. *laqeet-u muɣma* (or *muɣmi*) *ʕalee* I found him in a faint. - vn *ʃiɣmaaʃ, ʃiɣma*; pva *muɣma, muɣmi*.

استغمّى *ʃistiɣamma* /vi/ to put on a blindfold. - ava *mistiɣammi*.

أستغمّايه *ʃustuɣummaaya* or *ʃistuɣummaaya* /n/ (the game of) hide and seek.

غ ن ج ١

غنج *ɣanag (u)* /vi/ *[coarse]* to utter sounds during sexual intercourse to indicate pleasure and enthusiasm (of a woman). - vn *ɣang, ɣung*; ava *ɣaanig*.

غنجيّة *ɣunagiyya* /fem adj, pl *ɣunagiyyiin*/ = *ɣannaaga*.

غنّاجة *ɣannaaga* /fem adj, pl *ɣannagiin*/ *[coarse]* expressing her pleasure in and enthusiasm for sexual intercourse by the use of certain sounds. *ʃil-miḥtaaga ɣannaaga [prov]* ≈ when you want something it shows in your actions.

غ ن ج [2] see غ ن ن و ج : *ɣannuug*

غ ن ج و
غنجو *ɣangu* <It *gancio*> /n/ hook.

غ ن د ر
غندر *ɣandar* /vt/ to adorn, make fancy. *ʃaxuu-k ɣandar nafs-u min yoom ma ftaɣal fit-tilivizyoon* your brother has made himself a dandy since he started working in television. - vn *ɣandara*; ava/pva *miɣandar*.
غندور *ɣanduur, ɣanduur* /n pl *ɣanadra*/ dandy, fop.
غندورة *ɣanduura, ɣanduura* /n pl *-aat*/ coquette.
اتغندر *ʃitɣandar* /vi/ to become a dandy, become a fop. - ava *mitɣandar*.

غ ن ف ا ر
غنفارى *ɣinfaari* /adj/ cut on the bias.

غ ن ق see غ م ق [2] : *ɣunqiyya*

غ ن م
غنم *ɣanam* /coll n, pl *ʃaɣnaam*/ **1** sheep. ‖*ɣanam baladi* white sheep. - *ɣanam ḥamra* brown sheep. **2** mixed flock(s) of sheep and goats. ‖*qaal ya guḥa ʕidd' ɣanam-ak - qaal waḥda nayma w-waḥda qayma [prov]* someone said, 'Goha, count your flocks!' Goha replied 'One's lying down, the other's standing up.' (of something too small in number to need counting).
غنمة *ɣanama* /unit n, pl *-aat*/ a sheep.
غنماية *ɣanamaaya* = *ɣanama*.
غانم *ɣaanim: saalim ɣaanim* see *saalim*.
غنيمة *ɣaniima'* /n pl *ɣanaayim*/ booty.
غنّام *ɣannaam* /n pl *ɣannaama*/ sheep- and goatherd.
غنّم *ɣannim* /vt/ to cause to gain. *rabb-i-na yɣannim-ak is-salaama* may God grant you safety! - vn *taɣniim*; ava/pva *miɣannim*.
اتغنّم *ʃitɣannim* /vi/ passive of *ɣannim*. - iva *mitɣannim*.

غ ن ن
غنّ *ɣann[1] (u)* /vt/ *[ling]* to nasalize (certain sounds) in reading the Koran. - vn *ɣann*; ava *ɣaanin*.
غنّ *ɣann[2]* /n/ *[ling]* nasalized pronunciation of certain sounds in Koranic recitation.
غنّة *ɣunna* /n pl *-aat*/ a nasalized sound according to traditional Koranic recitation.
اتغنّ *ʃitɣann* /vi/ passive of *ɣann*. - iva *mitɣann*.

غ ن ن و ج
غنّوج *ɣannuug: baaba ɣannuug* dip made of sesame paste, garlic and mashed roasted egg-plant.

غ ن و see غ ن ى [1] : *ɣinwa, ɣinneewa*

غ ن ى [1]
غنا، غناء *ɣuna* /n/ singing. *ʃir-raqṣ' wil-ɣuna* dancing and singing. ‖*makanit ɣuna [obsol]* record-player.
غنائى *ɣinaaʃi'* /adj/ pertaining to song, vocal. *muʃallafaat ɣinaʃiyya* vocal works.
غنوة *ɣinwa* /n pl *-aat*/ (lyrical) song.
غنّيوة *ɣinneewa* /n pl *-aat*/ (lyrical) song.
أغنية *ʃuɣniyya, ʃuɣniya* /n pl *-aat, ʃaɣaani*/ (lyrical) song.
مغنى *maɣna* /n/ song, singing. *qaḍḍeena leela kull-a-ha maɣna w-ṭarab* we spent a night full of song and enjoyment.
غنّى *ɣanna* **1** /vt/ to sing. *ḥa-tɣanni ɣinwa gdiida l-lelaa-di* she will sing a new song tonight. **2** /vi/ to sing. *qaaʕid yiɣanni fil-ḥammaam* he's singing in the bathroom. - ava/pva *miɣanni*.
¶ *ɣanna ʕala* to string along, feed a line to. *ɣanneet ʕalee li-ɣaayit ma xadt il-fuluus minnu* I strung him along till I got the money from him. — *ɣanna bi-* to sing the praise of, extol. *kull-i-na bi-nɣanni b-gamaal maṣr* we all extol the beauty of Egypt.
مغنّى *muɣanni* /n */ singer.
مغناوى *miɣannaawi* /n pl *-yya, miɣannawiin, miɣannawiyyiin/* = *muɣanni*.
مغنّواني *miɣannawaati* /n pl *-yya*/ folk singer.
اتغنّى *ʃitɣanna* /vi/ to be sung. *ʃil-ɣinwa di tɣannit ziyaada ʕan il-lizuum* this song has been sung too many times. - iva *mitɣanni*.
¶ *ʃitɣanna bi-* to sing the praise of. *ʃibn-a-ha lli ṭuul ʕumr-a-ha b-titɣanna bii maat fil-ḥarb* her son whom she always idolized died in the war. - *ʃitɣanna ʕala* (impersonal) passive of *ɣanna ʕala*. *ʃana miʃ mi-lli b-yitɣanna ʕaleehum* I'm not one to be fooled.

غ ن ى [2]
غنى *ɣana (i)* /vt/ to make wealthy, enrich. *ʃil-ḥarb' ɣanit-hum* the war made them wealthy. *rabb-i-na yiɣnii-k* may Our Lord make you rich! (expression of gratitude). - vn *ɣina, ɣanayaan*; ava *ɣaani*; pva *maɣni*.
¶ *ɣana ʕan* to free from, allow to dispense with. *ʃik-kutub tiɣnii-k ʕan is-safar* reading is as good as travelling. *ḥaal-i yiɣni ʕan suʃaal-i* my condition speaks for itself.
غنى *ɣiná* **1** /vn/ ‖*(da) ɣina ʕan* (it) allows one to dispense with, as in *maknasit ik-kahraba ɣina ʕan il-*

xaddamiin a vacuum cleaner allows one to do without servants. *laa ɣina ʕan* there is no dispensing with, as in *ma-luu-ʃ ɣina ʕanha* he can't do without her. **2** /n/ wealth, riches. *ʃiš-šiit wala l-ɣina* fame (for one's riches) counts for more than (the) riches (themselves).

غانية *ɣaaniya*↑ /n pl *ɣawaani*/ **1** coquette. **2** prostitute.

غنى *ɣani* **1** /adj pl *ɣunaay, ʃaɣniya*/ wealthy, rich. *ʃarḍ*^{i} *ɣaniyya bil-fusfuur* land rich in phosphorus. *ʃil-ɣani ɣannuu-lu wil-faqiir mineen yiruḥuu-lu [prov]* people sing for the rich but won't even admit to knowing the way to a poor man's house. **2** /n/ Self-sufficient One (epithet of God). ‖ *ʃallaahu l-ɣani* (God is the Self-sufficient) ≈ you can be done without! as in *miʃ ḥa-tsaʕid-ni - maʕa s-salama ʃallaahu l-ɣani (ʕannak)* you won't help me? leave me alone then, I can do it without you!

أغنى *ʃaɣna*^{1} /el/ richer/richest.

اتغنى *ʃitɣana* /vi/ to become or be made rich or wealthy. - ava/iva *mitɣini*.

¶ *ʃitɣana ʕan* to be spared, be relieved of, be allowed to dispense with. *ʃil-ḥamdu li-llaah ʃinnina tɣaneena ʕan il-ḥikaaya di* thank heavens we were spared that!

أغنى *ʃaɣna*^{2} = *ɣana*.

¶ *ʃaɣna ʕan* = *ɣana ʕan*.

استغنى *ʃistaɣna* /vi/ to (be able to) do without. *ʃiḥna ma-nistaɣnaa-ʃ ʕan baʕḍii-na* we can't do without each other. *mumkin tistaɣna ʕan ik-kitaab ʃiwayya* can you spare the book for a while? ‖ *ʃinta mistaɣni ʕan ʕumr-ak tiʕmil kida* are you mad to take a risk like that? - *ma-nistaɣnaa-ʃ* formula of polite refusal or excuse, as in *ʃayy*^{i} *xidma tanya - la ma-nistaɣnaa-ʃ* 'Anything else?' 'You are very kind, but no. , *ma-nistaɣnaa-ʃ - ʃana b-akallim is-sayyid illi waraak* I'm sorry, I wasn't talking to you, but to the gentleman behind you. - vn *ʃistiɣna*; ava *mistaɣni*.

غ و ت see غ ى س : *ɣaat*↓, *muɣiit*

غ و ث see غ ى س

غ و ر

غار *ɣaar*^{2} *(u)* /vi/ **1** *[abus]* to go away, beat it. *ɣuur min wiʃʃ-i* get the hell out of my sight! *ɣaarit fi-sittiin dahya* she's gone away (and good riddance). ‖ *tiɣuur il-ʕoora b-faddan-ha [prov]* (let the one-eyed girl go to hell with her acre) ≈ never marry an ugly girl, no matter how rich! - *ɣaar if-ʃirk* to hell with going partners. **2**↑ to go in deep, penetrate far. *ʃil-qunbula ɣaarit fil-ʃarḍ* the bomb penetrated deep into the ground. *ʃis-silaaḥ ɣaayir fil-laḥm* the blade is deeply embedded in the flesh. ‖ *ḍufr*^{i} *ɣaayir* an ingrowing nail. - vn *ɣawaraan*; ava *ɣaayir*.

غار *ɣaar*^{3} *(i)* /vi/ to make a raid. - ava *ɣaayir*.

غور *ɣoor* /n pl *ʃaɣwaar*/ depth.

غار *ɣaar*^{4} /n/ cave.

غارة *ɣaara* /n pl *ɣaraat*/ raid. *ɣaara gawwiyya* air raid.

الغورية *ʃil-ɣuriyya* /prop n/ street and the area around it extending from el-Azhar Street to Bab Zuweila and containing markets and a number of historic monuments.

مغارة *maɣaara* /n/ **1** /pl *-aat*/ cave. **2** /no pl/ *[Chr]* stable of the Nativity.

اتغار *ʃitɣaar*^{1} /vi/ (impersonal) passive of *ɣaar*^{3}. *ʃayy*^{i} *ḥadaf mumkin yitɣaar ʕalee* any target may be raided. - iva *mitɣaar*.

أغار *ʃaɣaar*↑ /vi/ to make a raid. - vn *ʃiɣaara*; ava *muɣiir*.

غ و س see غ ى س : *ʃil-ɣoos*

غ و ش see غ و ى ش : *ɣiweeʃa*

غ و ص

غاص *ɣaaṣ (u)* /vi/ to go deep, submerge oneself. *laazim il-ɣawwaaṣa tɣuuṣ taḥt il-ʃalɣaam* the submarine has to dive below the mines. *ɣuṣna fil-mawḍuuʕ* we went deeply into the subject. *ʕaaʕid ɣaayiṣ fik-kursi* sitting sunk deep down in the chair. - vn *ɣooṣ, ɣawaṣaan*; pva *ɣaayiṣ*.

غوّاص *ɣawwaaṣ* /n pl *ɣawwaaṣiin, ɣawwaaṣa*/ (deep-sea) diver.

غوّاصة *ɣawwaaṣa* /n pl *-aat*/ submarine.

غ و ط

غوط *ɣiwiṭ (a)* /vi/ to become deep, deepen. *ʃil-ḥufra ɣiwṭit ʕal-ḥabl* the hole became too deep for the rope (to reach the bottom). - vn *ɣiwṭ, ɣawaṭaan*.

غوط *ɣiwṭ, ɣuwṭ* /n pl *ʃaɣwaaṭ*/ depth.

غويط *ɣawiiṭ* /adj * and pl *ɣiwaṭa*/ **1** deep. *nuʕra ɣawiiṭa* a deep hole. *ʃil-baḥr*^{i} *hina ɣawiiṭ* the sea is deep here. **2** crafty, sly and secretive. — *ʃil-ɣawiiṭ* /n/ **3** deep water. *ʃana ḥ-aʕuum fil-ɣawiiṭ* I'm going to swim where it's deep.

أغوط *ʃaɣwaṭ* /el/ **1** deeper/deepest. **2** more/most crafty, sly or secretive.

غوّط *ɣawwaṭ* **1** /vt/ to make deep(er), deepen. *ɣawwaṭ il-ḥufra* deepen the hole. **2** /vi/ to go deep. *ɣawwaṭna fig-gabal* we went deep into the desert. *ɣawwaṭ fil-*

mawquuʕ he delved deeply into the subject. -vn *taʁwiiṭ*; ava/pva *miʁawwaṭ*.

اتغوّط *ʔitʁawwaṭ* /vi/ to be deepened. -iva *mitʁawwaṭ*.

استغوط *ʔistaʁwaṭ* /vt/ **1** to consider (too) deep. **2** to select for being deep. -vn *ʔistiʁwaaṭ*; ava *mistaʁwaṭ*.

غ و ل

غول *ʁuul* /n pl *ʁilaan*/ ghoul. ‖ *bi-yaakul zayy il-ʁuul* ≈ he eats like a horse.

غولة *ʁuula* /n pl *ʁilaan*/ female ghoul. ‖ *ʔumm-i-na l-ʁuula* or *ʔumm il-ʁilaan* mother *ʁuula* (in children's stories). -*miin yiqdar yiquul lil-ʁuula ʕeen-ik ḥamra [prov]* who dares tell the *ʁuula*, 'Your eye is red'?

غوّل *ʁawwil* /vi/ **1** to extend, spread, branch out. *tisiib iz-zarʕ[a] ʕala ṭabiʕ-tu yʁawwil* if you leave the plants untended they bush out. *ʁawwil fil-maʃy' min ʁeer ma yḥiss* he walked too far without realizing it. **2** to make inroads. *ʁawwil fil-ʔakl* he consumed quantities of food. -vn *taʁwiil*; ava *miʁawwil*.

اتغوّل *ʔitʁawwil* = *ʁawwil*. -ava *mitʁawwil*.

استغول *ʔistaʁwil* **1** /vt/ to consider gluttonous. **2** /vi/ to encroach, make advances. *ʔistaʁwil fil-ʔakl* he got through huge quantities of food. -ava *mistaʁwil*.

غ و ى

غوى *ʁiwi (a)* /vt/ to become keen on, become enthusiastic about, delight in. *ʔana b-aʁwa t-tadriis* I love teaching. -vn *ʁawayaan*; ava *ʁaawi*.

غوى *ʁawa (i)* /vt/ to tempt, lure. *ʁawaa-ha b-filuus-u* he tempted her with his money. -vn *ʁayy*; ava *ʁaawi*; pva *maʁwi*.

غاوى *ʁaawi* /n/ enthusiast, devotee, fan. *ʁaawi koora* one who likes (playing or watching) football. *ʔil-ʁaawi ynaqqaṭ bi-ṭaqiyt-u [prov]* (the fan will donate his skull-cap) ≈ an enthusiast will give away everything he has for what he loves.

غيّة *ʁiyya* /n pl -*aat*/ **1** liking, inclination, fancy. *ʔabuu-ya lu ʁiyya fis-simiin* my father has a liking for fat. *kaan ʁiyya zamaan* it was a fad in the old days. **2** hobby. *lu ʁiyya fis-sibaaq* he's a race-goer. *ʁiyyit-u gamʕ iṭ-ṭawaabiʕ* his hobby is stamp collecting. **3** flock (e.g., of pigeons) kept as a hobby and not for eating. — /adj invar/ **4** kept as a hobby (of, e.g., pigeons).

اتغوى *ʔitʁawa* /vi/ to be tempted, be lured. -iva *mitʁiwi*.

أغوى *ʔaʁwa↑* = *ʁawa*. -vn *ʔiʁwa*; ava *miʁwi*.

غ و ى ش

غويشة *ʁiweeʃa* /n pl -*aat*, *ʁawaayiʃ*/ **1** bracelet. **2** keyhole cover.

غ ى ب [1]

غاب *ʁaab[2] (i)* /vi/ **1** to absent oneself. *ʔil-ʔustaaz ʁaab ʔusbuuʕ* the teacher was away for a week. ‖ *ʁaab il-quṭṭ ilʕab ya faar [prov]* ≈ when the cat's away, the mice will play. **2** to take (a long) time. *ḥa-tʁiib* will you be long? *raaḥ daaxil lil-maʃmuur ʁaab laḥẓa w-xarag* he went in to the superintendent, was away a moment and then came out again. *ʔir-ruxṣa bi-tʁiib ʕa-baal ma tiṭlaʕ* the licence takes a long time to be issued. -vn *ʁiyaab, ʁayabaan, ʁeeba*; ava *ʁaayib*.

¶ *ʁaab ʕan* to slip the memory of, be overlooked by. *ʔil-mawquuʕ da kaan ʁaayib ʕanni* I'd forgotton about that.

غياب *ʁiyaab* /n/ absence. *xad-u ʁiyaab* he marked him as absent.

غيابى *ʁiyaabi* /adj/ *[leg]* in absentia. *ḥukm' ʁyaabi* sentence (passed) in absentia. -/adverbially/ *ma-tuḥkum-ʃ' ʁyaabi* don't pass judgements before examining facts.

غيبه *ʁeeba* /n/ **1** absence. *ʁebt-ak il-marra di ṭawwilit* you were away for a long while this time. ‖ *ʁeeba bil-weeba* a prolonged absence. **2** talking about people behind their backs, backbiting.

غايب *ʁaayib* /adj */ absent. ‖ *ʕal-ʁaayib* from memory, as in *ḥafaẓ ʕala l-ʁaayib* to learn by heart, *sammaʕt-i-lu ʕal-ʁaayib* I recited it to him from memory. - *ʔil-ʁaayib ma-luu-ʃ naayib [prov]* (he who is absent has no share) ≈ out of sight out of mind. - *ʔil-ʁaayib ḥiggit-u maʕaa [prov]* (he who absents himself has his excuse with him) ≈ don't blame someone for not showing up - he must have his reasons. -*ṣalaat il-ʁaayib [Isl]* prayer for the dead performed in the absence of the corpse.

الغيب *ʔil-ʁeeb* /n/ the unknown, the future.

الغيوب *ʔil-ʁiyuub: ʕallaam il-ʁiyuub* Knower of the unknown (epithet of God).

غيبوبة *ʁaybuuba* /n/ unconsciousness, coma.

غيّب *ʁayyib* /vt/ **1** to record as absent. *mumkin tiʁayyib-ni bukra* could you mark me down as absent tomorrow? **2** to detain, delay, keep waiting. *ʔeeh illi ʁayyib-ak* what kept you? ‖ *ʔil-ʕaada baqa-lha ʃahreen miʁayyibaa-ni* my period is two months late. — /vi/ **3a** to absent oneself for a long time, be late. *ʁayyibt[a] ʕanni* (or *ʕalayya*) (1) it's ages since you came to see me. (2) you are late. **3b** *[coarse]* to take a long time in reaching orgasm. -ava/pva *miʁayyib*.

مغيّبات *muʁayyibaat* /pl n/ ointments etc. that delay orgasm.

اتغيّب *ʔitʁayyib* /vi/ passive of *ʁayyib*. -iva *mitʁayyib*.

استغيب *ʔistaʁyib* /vt/ **1** to consider (too) long absent. *ʔistaʁyibt-ak geet ʔanadii-k* you were too long coming

so I came to call you. **2** to take advantage of the absence of. *ʕistaɣyibuu-k wi-kalu l-ʃakl* they took advantage of your absence and ate the food. -vn *ʕistiɣyaab*; ava *mistaɣyib*.

غ ى ب [2] see غ ا ب : *ɣaab*[1], *ɣaaba*

غ ى ب و ب see غ ى ب [1] : *ɣaybuuba*

غ ى ث see غ ى س

غ ى ر [1]

غير *ɣeer* **1** /n/ person(s) other than the one(s) in question, other(s). *ʃamlaak il-ɣeer* other people's property. *ħagaat ɣeer-i* things that belongs to those other than myself, other people's things. *ɣeer-ak xad-u* someone other than you took it. *fuuf ɣer-na* find someone other than us. *laazim nistaħmil xaṭaʔ il-ɣeer* we have to put up with others' mistakes. **2** /prep/ **2a** except, apart from. *da ɣeer il-marḍa wig-garħa* that's apart from the sick and wounded. *ma-fii-ʃ ɣeeru* that's all there is. *talatt uʃhur ma-fii-ʃ ɣerhum* three months and no more. *ma-yaxud-ʃ*[i] *ɣeer sawaani* it only takes a few seconds. **2b** different from. *ʃana ɣeer dool* I am different from them. *da ɣeer (da)* that is different (from that). **3** /neg particle/ not (also non-, un-etc.). *ɣeer munaẓẓam* unorganized. *ɣeer iqtiṣaadi* uneconomic. *ʃil-kimya l-ɣeer ɛuḍwiyya* or *ʃil-kimya ɣeer il-ɛuḍwiyya* inorganic chemistry. *ḍarba ħurra ɣeer mubaʃra* an indirect free kick. *fi-ɣeer maṣlaħit il-balad* not in the country's interests. ¶ *min ɣeer* /prep/ without. *min ɣeer fuyl* without work. *miʃ ɑaadir ʃaɛiif min ɣeerak* I can't live without you! *min ɣeer ma* /conj/ without. *min ɣeer ma niɛraf* without our knowing. -*ɣeer lamma* /conj/ except, unless. *ma-b-tuxrug-ʃ*[i] *ɣeer lamma taaxud ʃuxt-a-ha maɛaaha* she never goes out without taking her sister with her. -*ɣer-ʃ* /conj/ but after all, only. *ʃay naɛam yistaahil id-dabħ*[i] *ɣer-ʃ ʃabuu ṣaħib-na* it's true he deserves the worst, only his father is a friend of ours.

غيار *ɣiyaar* **1** /vn/ changing (e.g., clothes or dressings). *ʃoodit ɣiyaar* changing room. ‖ *qiṭaɛ ɣiyaar* spare parts. **2** /n pl -*aat*/ **2a** replacement (for something worn out). *ʃil-ɑalam xiliṣ - ɛayiz-lu ɣyaar* the pen has run out - it needs a refill. **2b** change (e.g., of clothes, dressings). *bukra ħ-aɣsil ɣiyaraat il-ʃawlaad* I'll wash the children's dirty clothes tomorrow.

غيّر *ɣayyar* /vt/ to change, replace, alter. *ɣayyar is-siriir* change the bed-linen! *laazim niɣayyar ʃumbuubit il-butagaaz* we have to get a new bottle of butane gas. *ɣayyart*[i] *raʃy-i* I changed my mind. ‖ *ɣayyar filuus* to convert money from one currency to another. -*ɣayyar ik-kalaam* (1) to change the subject. (2) to misinterpret what has been said. -*ɣayyar ir-riiɑ* to have the first meal of the day. -*ɣayyar id-damm* to make furious. -vn *taɣyiir*; ava/pva *miɣayyar*.

تغيير *taɣyiir* /n pl -*aat*/ change, alteration. *ɛamalu taɣyiraat fil-maħall* they made changes in the shop.

تغييرة *taɣyiira* /n pl -*aat*/ **1** = *ɣiyaar* 2. **2** /inst n/ a changing. *ʃil-mumarriḍa ma-ɛamalit-lii-ʃ ɣeer taɣyiira waħda fil-ʃusbuuɛ* the nurse only gave me one change (of dressing) in a week.

مغيّر *muɣayyir, miɣayyar* /n/ Changer (epithet of God). *subħaan miɣayyar il-ʃaħwaal* ≈ what a change!

اتغيّر *ʃitɣayyar* /vi/ **1** to be changed, be replaced, be altered. *ʃil-maɛaad itɣayyar* the appointment was changed. *ʃil-ɛarabiyya mitʃaħħama w-mitɣayyar laha ẓ-ẓeet* the car has been greased and had its oil changed. **2** to change, become different. *ʃil-balaħ loon-u tɣayyar* the colour of the dates has changed. *ʃid-dinya tɣayyarit* times have changed. *ʃana m-atɣayyar-ʃ*[i] *ʃabadan* ≈ I am always dependable. *ʃinta tɣayyart*[i] *min gihat-i* you don't treat me (well) the way you used to. ‖ *loon-u* (or *damm-u) tɣayyar* he got upset. -vn *taɣayyur*; ava/iva *mitɣayyar*.

تغيّر *taɣayyur* /n pl -*aat*/ change, alteration. *ħaṣalit taɣayyuraat kitiir fil-balad* many changes have taken place in the country.

متغيّر *mutaɣayyir* /n pl -*aat*/ *[math]* variable.

غ ى ر [2]

غير *ɣaar*[5] *(i)* /vi/ to be jealous. *bi-yɣiir min ʕaṣħaab-u* he gets jealous of his friends. *bi-yɣiir ɛala mraat-u* he gets jealous about his wife. -vn *ɣiira, ɣayaraan*; ava *ɣaayir, ɣayraan*.

غيرة *ɣiira* /n/ jealousy. *ʃil-ɣiira murra [prov]* jealousy is bitter.

غيّار *ɣayyaar*[1] /adj */ jealous by nature, given to jealousy.

غيّور *ɣayyuur* = *ɣayyaar*.

اتغار *ʃitɣaar*[2] /vi/ (impersonal) passive of *ɣaar*[5]. *da yitɣaar minnu* he is likely to incur jealousy. -iva *mitɣaar*.

غ ى ر [3]

غار *ɣaar (i)* /vi/ to be ticklish. *b-aɣiir min riglay-ya* I'm ticklish in my feet. -vn *ɣiira, ɣayaraan*; ava *ɣaayir, ɣayraan*.

غيّار *ɣayyaar*[2] /adj */ ticklish.

غ ى ر [4] see غ ا ر : *ʁaar*[1]

غ ى ر [5] see غ و ر : *ʁaar*[2], *ʁaar*[3], *ʁaar*[4], *ʁaara*, *maʁaara*, *ʃaʁaar*

غ ى س

غاث، غات *ʁaas*, *ʁaat*↓ *(i)* /vt/ to come to the help of. *ʁiriqt' w-ma-ḥadd'-ʃ ʁas-ni* I was drowning and no one came to my aid. - vn *ʁoos*, *ʁayasaan*; ava *ʁaayis*.

الغوث *ʃil-ʁoos* /n/ the one who saves (title given in popular Sufism to certain saints).

أغاث *ʃaʁaas*↑ = *ʁaas*. - vn *ʃiʁaasa*; ava *muʁiis*.

مغيث *muʁiis*, *muʁiit*↓ /n/ Helper (epithet of God).

استغاث *ʃistaʁaas*↑ /vi/ to call for help. *ʃistaʁaasit bil-buliiṣ* she sought help from the police. - vn *ʃistiʁaasa*; ava *mistaʁiis*, *mustaʁiis*.

استغاثة *ʃistiʁaasa* /n pl *-aat*/ call for help.

غ ى ط

غيط *ʁeeṭ* /n pl *ʁeṭaan*/ field. ‖*ṣurṣaar il-ʁeeṭ [zool]* cricket. - *ʃabu l-ʁeeṭ* /prop n/ village near the Barrages north of Cairo, home of a group of musicians and dancers who perform at *zaar* ceremonies.

غيطانى *ʁeṭaani* **1** /adj pl *-yya*/ **1a** pertaining to the village of *ʃabu l-ʁeeṭ*. **1b** pertaining to the *ʃabu l-ʁeeṭ* troupe. **2** /adj invar/ farm-fresh (of vegetables).

غ ى ظ

غاظ *ʁaaẓ (i)* /vt/ **1** to hurt, cause irritation to. *marawḥ-i bi-tʁiẓ-ni* my lungs cause me irritation. **2** to make irritable, annoy, frustrate, infuriate. *ʃilli bi-yʁiẓ-ni ʃinn in-naas bi-yiftikru ʃinn ig-gawaaz fee ʃ sahl* what annoys me is that people think marriage is an easy business. **3** to tease. - vn *ʁeeẓ*, *ʁayaẓaan*; ava *ʁaayiẓ*.

غيظ *ʁeeẓ* /n/ irritation, annoyance, frustration. *ḥa-tṭaqq' mil-ʁeeẓ* she's about to explode with frustration. *muutu b-ʁeẓ-kum* (or *bi-ʁayẓ-i-kum*) ≈ may your vexation kill you!

اتغاظ *ʃitʁaaẓ* /vi/ to be or become irritated, annoyed, frustrated or infuriated. - ava/iva *mitʁaaẓ*.

استغاظ *ʃistaʁaaẓ*↓ = *ʃitʁaaẓ*. - ava *mistaʁaaẓ*.

غ ى م

غيم *ʁeem* /coll n/ cloud(s).

غيمة *ʁeema* /n/ **1** /unit n/ a cloud. ‖*ʁeema w-ɛaddit* it was bad but it passed, they were bad times but they're over now. **2** cloudiness, murkiness, gloom.

غيام *ʁayaam* (also *ʁayaan*) = *ʁeem*.

غيامة *ʁayaama* (also *ʁayaana*) /unit n, pl *-aat*/ a cloud.

غيّم *ʁayyim* (also *ʁayyin*) /vi/ to cloud over, become cloudy. *ʃig-gaww' ʁayyim* the weather turned cloudy. - vn *taʁyiim*; ava *miʁayyim*.

غ ى ن [1]

غين *ʁeen* /fem n, pl *-aat*/ nineteenth letter of the Arabic alphabet.

غ ى ن [2] see غ ى م : *ʁayaan*, *ʁayaana*, *ʁayyin*

غ ى ى see غ و ى : *ʁiyya*

ف

ف

ف *fa-* /conj/ **1** (and) so, therefore. *ma-kan-ʃ*^{i} *maʕaaya fluus fa-ruħt il-bank* I didn't have any money on me so I went to the bank. *bi-titħidif ħadfa muʕayyana fa-bi-tliff* it is thrown in a certain way and so it spins. **2** and there, and then. *kunt*^{i} *daaxil in-naadi fa-lamma geet ʕand il-baab ʔabilt*^{a} *ħasan* I was coming into the club and then, when I got to the door, I met Hasan. *kunt*^{i} *b-asammaʕ fa-ʔaṭiʕ-ni ʕand*^{i} *kilmit malʕuun* I was reciting, and at the word 'accursed' he interrupted me.

ف ا

فا *faa* /fem n/ twentieth letter of the Arabic alphabet. - also *faaʃ, fih, feeh.*

ف ا ء

فاء *faaʃ* /fem n, pl *-aat*/ twentieth letter of the Arabic alphabet. - also *faa, fih, feeh.*

(ف ا ر)

فار *faar*^{1} /n pl *firaan*/ mouse, rat. ‖ *ʃil-faar liʕib fi-ʕibb-i* I began to have suspicions, I smelled a rat. *-faar is-sabtiyya* see *ʃis-sabtiyya.*

فارة *faara* /n pl *-aat*/ *[carp]* plane. *faarit tafriib* smoothing plane. *faarit kaff* jack plane.

(ف ا ز)

فاز *faaz* <Fr> /n/ *[elec]* phase.

فازة *vaaza* or *vaaza, faaza*$^{\downarrow}$ or *faaza* <It *vaso*> /n pl *-aat, -aat*/ vase.

ف ا س

فاس *faas* /n, usu fem, pl *fuus*/ type of heavy hoe or mattock (see Pl.D, 6). ‖ *wiqiʕ il-faas fir-raas [prov]* (the *faas* has fallen on the head) things have gone past the point of no return.

ف ا ش

فاش *faaf* /coll n/ bird mite(s).

فاشة *faafa* /unit n, pl *-aat*/ a bird mite.

ف ا ل see **ف ء ل**: *faal*

ف ا و ل see **ف و ل** [3]: *faawil*

ف ا ى

فاية *faaya* /n/ *[naut]* halyard.

ف ء see also **ف ى ى**

فئة *fiʔa* /n pl *-aat*/ **1** civil service employment category covering certain salary grades. **2** *fiʔaat* /pl n/ *[pol]* category in the Egyptian electoral system comprising people other than labourers and peasants.

ف ء ف ء

فأفأ *faʔfaʔ* /vi/ to stammer. - vn *faʔfaʔa*; ava *mifaʔfaʔ.*

ف ء ل

فأل، فال *faal, faʔl* /n/ omen. ‖ *faal allaah wala faal-ak* ≈ God forbid! - *xudu fal-kum min ʕiyal-kum [prov]* ≈ out of the mouths of babes.

اتفائل *ʔitfaaʔil* /vi/ to become optimistic. *ʔitfaʔilt*^{i} *lamma smiʕt il-xabar* I started to feel optimistic when I heard the news. - ava *mitfaaʔil.*

تفاؤل *tafaaʔul*$^{\uparrow}$ /n/ optimism. see further under **ف و ل** [1]

ف ب ر

فبر *fibr* <Fr *fibre*> /n/ compressed cardboard.

- ف ب ر ا -

فبراير *fabraayir* /n/ February.

ف ب ر ك [1]
فابريكة *fabriika* <It *fabbrica*> /n pl *-aat*/ factory.

ف ب ر ك [2]
فبرك *fabrik* <perh It *fabbricare*> /vt/ to fabricate (a story etc.). - vn *fabraka*; ava/pva *mifabrik*.
اتفبرك *ʔitfabrik* /vi/ to be fabricated (of news, a story etc.). - vn *tifabrik*; iva *mitfabrik*.

ف ت see ف ت و [1]: *fata*

ف ت ت
فتّ *fatt (i)* **1** /vt/ to make into *fatta*. **2** /vi/ to prepare *fatta*. - vn *fatt, fatataan*; ava *faatit*; pva *maftuut*.
فتّة *fatta* /n/ a dish consisting of hot broth, or the like (e.g., milk), poured over crumbled bread. *fattit ʕads* bread in lentil soup. *fattit laban* bread and milk with sugar.
فتّاب *fattaat* /adj * and pl *fattaata*/ forever ready to sponge a meal.
فتّت *fattit* /vt/ to crumble, break into small pieces. - vn *taftit*; ava/pva *mifattit*.
اتفتّت *ʔitfattit* /vi/ to be crumbled or crumble, be broken into small pieces or break into small pieces. - ava/iva *mitfattit*.

ف ت ح
فتح *fataḥ (a)* /vt/ **1a** to open. *ʔiftaḥ il-baab* open the door! *ʔawwil ḥaaga fataḥt ᵃ ʕenay-ya ʕaleeha ṣ-ṣubḥ* the first thing my eyes lighted on in the morning. *ʕumr-a-ha ma-fataḥit buqq-a-ha ʕala ḥadd* she's never said a bad word to anyone! ‖*fataḥ ik-kutfiina* (or *ik-kitaab*) to tell fortunes by cards (or by the stars). **1b** to open up, make accessible. *fataḥ-li beet-u* he opened his house to me. *ʔis-sikka maftuḥaa-lak* the way is open to you. ‖*wilaada b-fatḥ' baṭn* Caesarean delivery. - *ʔiftaḥ-li s-sikka* clear the (telephone) line for me! - *yiftaḥ alla* (may God open a way!) ≈ certainly not! no go! no way! (in emphatic refusal of an offer). - *been il-baayiʕ wiṭ-ṭaari yiftaḥ alla* (between the vendor and the buyer: may God open a way!) ≈ if you don't like my price, you don't have to buy (or sell)! (said in bargaining). - *rabb-i-na yiftaḥ-ha ʕala* ... may Our Lord provide help or profit for ..., as in *rabb-i-na yiftaḥ-ha ʕalayya b-ʔirfeen* may Our Lord help me with some money. - *ʔiid-u* (or *beet-u*) *maftuuḥa* he's generous and openhanded. **2** to turn on, set going. *ʔiftaḥ in-nuur* switch on the light! ‖*fataḥ ṣoot-u* he let out a shout. - *fataḥ in-nifs* to stimulate the appetite, set one's mouth watering. **3** to set up, establish. *fataḥt' dukkaan* I opened a shop. *ʔaḥibb aftaḥ ḥisaab ʕandukum* I'd like to open an account with you. ‖*fataḥ beet* to set up (one's own) house. - *huwwa faatiḥ il-beet* he is the breadwinner. **4** to start, begin. *fataḥt' maḥḍar* I instituted legal proceedings. **5** to conquer. ‖*zayy' ma ykuun fataḥ ʕakka* (as if he had conquered Acre) ≈ as if he had accomplished the impossible. - /vi/ **6** to open, open up. *ʔil-baab fataḥ* the door opened. *ʔil-maḥallaat faṭḥa* the shops are open. ‖ *ʔil-ḥuṣaan haayig - ma-ṭiftaḥ-luu-ʃ* the horse is excited - don't give him his head! **7** to be set up, be established. *maṭʕam gidiid fataḥ fik-kurniiʃ* a new restaurant opened on the Corniche. **8** to become lighter (of colours). *ʔil-loon il-ʔaḥmar bi-yiftaḥ fiṭ-ṭams* red colours get lighter in the sun. - vn *fatḥ, fataḥaan, futuuḥ*; ava *faatiḥ*; pva *maftuuḥ*.
فتحه *fatḥa* /n pl *-aat*/ **1** instance noun of *fatḥ*. **2** *[gram]* vowel sign for short *a* (in Arabic writing). — /also pl *futaḥ*/ **3** aperture. *faṭḥaat iṭ-ṭababiik* the openings for the windows. ‖*faṭḥit ʕadasa* diaphragm of a (camera) lens. - *faṭḥit farag* anus
فتوح *futuuḥ* /vn/ ‖*futuuḥ rabbaani* divine grace bestowed on someone (as manifested, especially, in wealth).
فاتح *faatiḥ'* **1** /adj/ pale, light (of colour). *ʔazraq faatiḥ* light blue. - *fawaatiḥ* /pl n/ **2** light-coloured items. *ma-tiḫsilii-ʃ il-fawaatiḥ maʕa l-ḫawaamiq* don't wash the light- and dark-coloured things together!

الفاتحة *ʔil-faṭḥa* /n/ *[Isl]* **1** the opening chapter of the Koran (often read by parties to a preliminary contract or agreement as an earnest of good faith). *ʕaru faṭḥit-ha* they (i.e. the future bride's and groom's parents) confirmed their intentions by reading the opening chapter of the Koran. *ʕareena l-faṭḥa ʕala l-ʔamwaat* we read the Fatiha for the dead, we prayed for the dead. ‖ *ʔiʕra l-faṭḥa ʕala rooḥ-ak* say your prayers, (because I'm going to kill you)! **2** *fawaatiḥ* /pl n/ prayers for the dead.
مفتوح *maftuuḥ* /pva/ ‖*bil-maftuuḥ* openly, frankly, candidly.
أفتح *ʔaftaḥ* /el/ lighter/lightest (of colour).
فتّاح *fattaaḥ* /n/ Opener (of the way), Facilitator (epithet of God). ‖*ya fattaaḥ ya ʕaliim ya razzaaq ya karriim* ≈ (1) may this day be profitable (said at the start of a day). (2) the day is ruined for me (said in exasperation when things go wrong in the morning).
فتّاحه *fattaaḥa* /n pl *-aat*/ opener (e.g., for bottles, tins).
مفتاح *muftaaḥ* /n pl *mafatiiḥ*/ **1** key. *ʕafal iṭ-ṭaʕʕa bil-muftaaḥ* he locked the apartment. **2** spanner, wrench. *muftaaḥ ʔingiliizi* monkey wrench **3** switch, lever, (gas) tap. *muftaaḥ nuur* light-switch. *muftaaḥ hawa* gas control (of a welder's torch). *muftaaḥ (saaʕa)* crown (of

a watch). **4** *[mus]* peg (of a stringed instrument).

اتفتح ʔitfataḥ /vi/ **1a** to open, be opened. *ʔil-ʔabwaab itfataḥit l-istiqbaal il-ɛariis* the doors were opened to receive the bridegroom. **1b** to be made accessible. *ʔis-sikka tfataḥit-li* the way was opened to me. **2a** to be turned on, be switched on, be set going. *ʔir-radyu tfataḥ ʔizzaay* how did the radio come to be turned on? ‖ *ʔitfataḥit fi-goz-ha* she lashed out at her husband, she snarled at her husband. **2b** to embark, get going. *ʔitfataḥit fiʃ-ʃakwa* she launched into a long complaint. *ʔitfataḥu fig-giwaan* they've hit a scoring streak. *ḥaẓẓ-u tfataḥ* he's having a run of good luck. **3** to be set up, be established. **4** to be started, be begun. - ava/iva *mitfitiḥ*.

انفتح ʔinfataḥ = ʔitfataḥ. - vn *ʔinfitaaḥ*; ava/iva *minfitiḥ*.

الانفتاح ʔil-ʔinfitaaḥ (also ʔil-ʔinfitaaḥ il-ʔiqtiṣaadi) /n/ *[pol]* the 'open-door' policy, liberalization of the Egyptian economy instituted by President Sadat in 1974.

فتّح *fattaḥ* /vt/ **1** to open wide, or repeatedly, or several things. *fattaḥ iʃ-ʃiif* open (all) the shutters! ‖ *fattaḥ fi-ɛeen-(u)* to look (s.o.) in the eye. - *fattaḥ ɛeen-(u)* to be alert, keep (one's) wits about (one). - *fattaḥ-lu muxx-u* give him a bribe! - *fattaḥ fi-(i)* to answer (s.o.) back rudely. **2** *[print]* to develop (a plate). — /vi/ **3** to open one by one. *ʔil-ʔazhaar tifattaḥ fir-rabiiɛ* flowers bloom in spring. - vn *taftiiḥ*; ava/pva *mifattaḥ*.

مفتّح *mifattaḥ* /adj */ **1** seeing, not blind. **2** alert, cunning. *laazim iz-zibuun yibqa mfattaḥ* the customer should keep his wits about him. ‖ *bint[i] mfattaḥa* (over-) precocious (young) girl.

اتفتّح ʔitfattaḥ /vi/ passive of *fattaḥ*. - vn *tafattuḥ↑*; iva *mitfattaḥ*.

فاتح *faatiḥ*[2] /vt/ to address oneself to, approach. *ḥ-afatḥ-u fil-mawḍuuɛ* I'll raise the subject with him. *fatiḥ-ha fig-gawaaz* he proposed marriage to her. - vn *mufatḥa, mifatḥa*; ava *mifaatiḥ*.

اتفاتح ʔitfaatiḥ /vi/ to be addressed, be approached. - iva *mitfaatiḥ*.

افتتح ʔiftataḥ↑ /vt/ to inaugurate. *ʔiftitaaḥ qanaat is-siwees* the inauguration of the Suez Canal. - vn *ʔiftitaaḥ*; ava *miftitiḥ*.

افتتاحي ʔiftitaaḥi↑ /adj/ opening. *maqaala ʔiftitaḥiyya* leading article, editorial.

افتتاحيّة ʔiftitaḥiyya↑ /n pl *-aat/ *[mus]* overture.

استفتح ʔistaftaḥ **1** /vt/ to approach initially. *ʔistaftaḥ-ni biʃ-ʃitiima* he met me with insults. **2** /vi/ to open one's day's or life's work. *sawwaaq it-taks istaftaḥ biyya* I was the taxi-driver's first customer. *ʔistaftaḥ il-muḥaami fi-ʔawwil ma ʃtaɣal bi-ṭalaaq sitt* the lawyer began his career with a woman's divorce (case). *ḥallaaq bi-ʔaqraɛ istaftaḥ [prov]* ≈ (as unlucky as) a barber whose first customer is bald (from ringworm). *ʔistiftaaḥ-ak laban* you've set my day off to a good start! (from, e.g., a trader to his first customer of the day). - vn *ʔistiftaaḥ*; ava *mistaftaḥ*.

ف ت ر [1]

فترة *fatra* /n pl *-aat, fataraat/ period of time. *fatrit il-xuṭuuba* the engagement period. *bi-yiftaɣal fil-fatra l-masaʔiyya* he works the evening shift.

فتر *fitr* /n/ span, or measurement equivalent to the span, between the extended thumb and index finger.

ف ت ر [2]

فتر *fitir (u)* /vi/ to become tepid. *ʔil-ɛilaqaat illi benna fitrit* relations between us have cooled. *mayya fatra* lukewarm water. - vn *futuur*; ava *faatir*.

ف ت ر [3] see ف ت و ر : *fatuura*

ف ت ر ي ن

فترينة *vatriina* <It *vetrina*> /n pl *-aat, vatariin/ display case, display window, shop window. - also *batriina*.

ف ت س see ف ت ي س : *fitees, fitiis*

ف ت ش

فتش *fataʃ (i)* **1** /vt/ to disclose, reveal, divulge. *miin fataʃ is-sirr* who let the cat out of the bag? ‖ *sirr-u maftuuf* he can't keep a secret. **2** /vi/ to act as informer. *ḥ-aftiʃ ɛaleek* I'll tell on you. - vn *fatʃ, fataʃaan*; ava *faatiʃ*; pva *maftuuf*.

اتفتش ʔitfataʃ /vi/ to be disclosed, be revealed, be divulged. - iva *mitfitiʃ*.

انفتش ʔinfataʃ = ʔitfataʃ. - iva *minfitiʃ*.

فتش *fattiʃ* **1** /vt/ to make an inspection or search of. *taftiiʃ ɛaff* luggage inspection. *fattiʃu l-beet wi-laqu muxaddaraat* they searched the house and found drugs. **2** /vi/ to make an inspection or search. *qaɛadt[i] saaɛa ʔafattiʃ ɛala ḥittit il-waraqa di* I spent an hour hunting for this bit of paper. *ʔin-naʃʃaal bi-yirkab il-ʔutubiis ɛaʃaan yifattiʃ-lu ɛala ṣeeda* the pickpocket rides the buses in order to search out his prey. - vn *taftiiʃ*; ava *mifattiʃ*.

تفتيش *taftiiʃ* /n pl *tafatiiʃ/ district, inspectorate. *taftiiʃ rayy* irrigation circle, irrigation district.

مفتّش *mufattiʃ* /n */ inspector.

اتفتّش ʔitfattiʃ /vi/ **1** to be inspected, be searched. **2** (impersonal) passive of *fattiʃ* 2. *ʔil-muxaddaraat*

itfattif ɛaleeha f-kull' ħitta the drugs have been hunted for everywhere. - iva *mitfattif*.

ف ت غ ر -

فوتوغرافية *futuɣrafya* <It *fotografia*> /n pl *-aat/ [obsol]* camera.

فوتوغرافى *futuɣraafi* /adj/ photographic. *ṣuura futuɣrafiyya* photograph.

ف ت ف ت

فتفت *fatfit* /vt/ to crumble, break into tiny pieces. *fatfitna l-ɛeef* we crumbled the bread. - also *farfit*. - vn *fatfata*; ava/pva *mifatfit*.

فتفوتة *fatfuuta* /n pl *fatafiit/* tiny piece, crumb. *fatafiit xaʃab* slivers of wood. *fatfuutit ɛeef* a crumb of bread. - also *farfuuta*.

اتفتفت *ʔitfatfit* /vi/ to be crumbled, be broken into tiny pieces. - also *ʔitfarfit*. - iva *mitfatfit*.

ف ت ق

فتق *fataq (a)* /vt/ **1** to rip open (a garment) at the seams. **2** to deflower (a virgin). - vn *fatq, fataqaan*; ava *faatiq*; pva *maftuuq*. see further under ف ى ت ق

فتق *fatq* /n pl *futuuq/* **1** rent, tear. **2** *[path]* hernia.

فتقة *fatqa* /pl *-aat/* instance noun of *fatq*.

فتاق *fitaaq* /n pl *-aat/ [path]* hernia, rupture.

اتفتق *ʔitfataq* /vi/ **1** passive of *fataq*. **2** to come open at the seams. - ava/iva *mitfitiq*.

انفتق *ʔinfataq* = *ʔitfataq*. - ava/iva *minfitiq*.

فتّق *fattaq* **1** /vt/ to cause to tear or rip. *kutr if-ʃadd' bi-yfattaq il-ɋumaaʃ* too much stress will tear the material. ‖*ħ-afattaq-lu* I'll split his seams (so all his dirty secrets will come out), I'll expose him to the world. **2** /vi/ to rip open, split (at the seams, of a garment). - ava *mifattaq*.

مفتّقة *mifattaqa* /n/ jam-like mixture of spices, herbs, nuts and molasses (eaten by women as a fattener).

اتفتّق *ʔitfattaq* /vi/ to rip open at the seams (of a garment). *ʔil-banṭaloon itfattaq* the trousers burst at the seams. - ava *mitfattaq*.

ف ت ك

فتك *fatakˆ (a)* /vi/ to wreak destruction. *fataku b-ʔaɛdaʔ-hum* they annihilated their enemies. ‖*fatak bil-ʔakl* he wolfed down every last morsel of the food. - vn *fatakaan, fatk*; ava *faatik*.

فتك *fitik* /adj */ **1** clever and capable. **2** successful with women (of a man).

فتاكة *fataaka* /n/ cleverness and capability.

اتفتك *ʔitfatak* /vi/ (impersonal) passive of *fatak*. *ʔitfatak biihum waaħid waaħid* they were wiped out one after the other. - iva *mitfitik*.

انفتك *ʔinfatak* = *ʔitfatak*. - iva *minfitik*.

ف ت ل [1]

فتل *fatal (i)* /vt/ **1** to spin, twist together into strands. *fatl il-ħibaal* rope-making. ‖*min daqn-u wi-ftil-lu [prov]* (if he wants a rope, take hairs from his beard and make it for him) ≈ make him pay for all he gets. **2** to roll (dough) into strands. - vn *fatalaan, fatl*; ava *faatil*; pva *maftuul*.

فتلة *fatla* /n/ **1** /pl *-aat/* instance noun of *fatl*. **2** /pl *-aat, fitaal/* thread, piece of thread. *fatlit xeeṭ* a length of thread. *fatlit dubaara* a piece of string. *naqqaf bil-fatla* to pluck out facial hair with a twisted double thread (the hair is caught between the two strands and pulled out as the thread is passed over the face). ‖*ɛala l-fatla* exact, precise (i.e. to the last thread). - *ʔibn' fatla* a crafty fellow. - *ʃammaɛ il-fatla* he ran off, he beat it. **3** /pl *fitaal/* strand (e.g., of hair, dough).

فتول *fatuul* /n pl *fataayil/* tampon.

فتيل *fitiil* /n pl *fataayil/* **1a** lamp wick. **1b** pilot-light. **2** fuse (for setting off an explosive charge). **3** tampon. **4** square-headed screw. **5** /coll n/ seed onion(s).

فتيلة *fitiila* /n pl *fataayil/* **1** = *fitiil* 1 and 2. ‖*ħaṭṭ' fii fitiila* he added fuel to the fire, he exacerbated the situation. **2** strand (of dough). **3** *[med]* sponge. — /unit n, pl *-aat, fataayil/* **4** a seed onion.

اتفتل *ʔitfatal* /vi/ **1** to be spun, be twisted together (into strands). **2** to be rolled into strands (of dough). ‖*baɛd il-ɛiid ma-yitfatil-ʃ' kaħk [prov]* (after the festival *kaħk* is not made) ≈ one doesn't hang streamers after Christmas. - iva *mitfitil*.

انفتل *ʔinfatal* = *ʔitfatal*. - iva *minfitil*.

فتّل *fattil* /vt/ to twist, roll (into strands) repeatedly. *ɋaɛad yifattil ʃawarb-u* he sat twirling his moustache. *bi-nfattil il-ɛagiina* we make the dough into (lots of) strands. - vn *taftiil*; ava/pva *mifattil*.

اتفتّل *ʔitfattil* /vi/ to be twisted or rolled (into strands) repeatedly. - iva *mitfattil*.

ف ت ل [2] see ف ت ى ه : *futeel*

ف ت م ى ن

فيتامين *fitamiin, vitamiin* <Fr> /n pl *-aat/* vitamin.

ف ت ن [1]

فتن *fatan (i)* **1** /vt/ to charm, enchant. *gamal-ha yiftin il-ɛaql* her beauty would turn your head. **2** /vi/ to tell tales, tattle. *ʔidda-lna gneeh ɛaʃaan ma-niftin-ʃ' ɛalee*

he gave us a pound so that we wouldn't squeal on him. - vn *fitna, fatn*; ava *faatin*; pva *maftuun*.

فتنة *fitna* /n/ **1** /vn/ telling tales, tattling, squealing. – /pl *-aat, fitan*/ **2** conflict, discord, dissension. **3** sedition.

فتّان *fattaan* **1** /adj/ alluring, enchanting. **2** /n * and pl *fattaana*/ blabbermouth, tattler, squealer.

أفتن *ʕaftan* /el/ **1** more/most charming. **2** more/most tattling.

فتّن *fattin* /vt/ to make (s.o.) blab. *ħawilt afattin-u ɛaleek ma-qdirt^{i}-ʃ* I tried to make him squeal on you, but without success. - vn *taftiin*; ava/pva *mifattin*.

اتفتّن *ʕitfattin* /vi/ passive of *fattin*. - iva *mitfattin*.

ف ت ن ^{2}

فتنة *futna* /n/ *[bot]* cassie, popinac (Acacia farnesiana).

ف ت ه see ف ت ي ه : *futeeh*

ف ت و ^{1} see also ف ت و ن

فتى *fata^{1}* /n pl *fityaan*/ youth, young man.

فتاة *fataah* /n pl *fatayaat*/ young woman.

فتوّة *futuwwa↑* /n/ *[obsol]* military training (in schools).

فتوّة *fitiwwa* /n pl *-aat*/ **1** *[obsol]* neighbourhood strong-man and protector of local interests. **2** bully, tough guy, hood. – /adj invar/ **3** tough. *waad fitiwwa* a tough kid. *bint^{i} ftiwwa* a tough no-nonsense girl.

فتوّاية *fitiwwaaya* /n pl *-aat*/ *[obsol]* neighbourhood virago acting as protector of local interests. ‖ *bint^{i} ftiwwaaya* a tough girl, hoyden.

ف ت و ^{2} see ف ت ي ^{1} : *fatwa*

ف ت و ر

فاتورة *fatuura* <It *fattura*> /n pl *fawatiir*/ **1** invoice, bill. **2** *[text]* sample.

ف ت و ن

فتونة *fatwana* /n/ **1** verbal noun of *ʕitfatwin*. **2** *[obsol]* sum of qualities (strength, courage, generosity etc.) expected of a *fitiwwa*.

اتفتون *ʕitfatwin* /vi/ to act the tough, behave in a bullying fashion. - vn *fatwana*; ava *mitfatwin*. see further under ف ت و ^{1}

ف ت ي ^{1}

فتى *fata^{2} (i)* /vi/ **1** to issue a legal opinion. **2** to make pompous pronouncements, lay down the law. - vn *fatwa*; ava *faati*.

فتوى *fatwa* /n pl *-aat, fataawi*/ legal opinion, ruling.

أفتى *ʕafta* /vi/ = *fata^{2}*. *daar il-ʕiftaaʕ↑* or *daar il-ʕifta* central office of the Mufti of Egypt. - vn *ʕiftaaʕ, ʕifta*; ava *mufti*.

مفتى *mufti* /n */ *[Isl]* mufti.

استفتى *ʕistafta* /vt/ to ask for a legal opinion. - vn *ʕistiftaaʕ*; ava *mistafti*.

استفتاء *ʕistiftaaʕ* /n pl *-aat*/ referendum.

ف ت ي ^{2} see ف ت و ^{1} : *fata^{1}, fityaan, fataah, fatayaat*

ف ت ي س

فتيس *fitees, fitiis* <Fr *vitesse*> /n/ *[auto]* gear-shift lever.

ف ت ي ل see ف ت ي ه : *futeel*

ف ت ي ه

فوتيه *futeeh* (also *futeel*) <Fr *fauteuil*> /n pl *-aat*/ armchair.

ف ج ء

فجأة *fagʕa* /adv/ suddenly. *maat fagʕa* he died suddenly.

¶ *fagʕatan↑* = *fagʕa*.

فجائى *fugaaʕi* /adj/ surprise, surprising. *taftiif fugaaʕi* surprise inspection. *ʕil-xabar gaa-li b-ṭariiqa fugaʕiyya* the news reached me in an unexpected way.

فاجئ *faagiʕ* /vt/ to surprise, catch by surprise. *fagiʕ-ni l-ɛaya w-ʕana f-maktab-i b-aftaṿal* the illness hit me suddenly while I was working at the office. - /the literary passive occurs/ *fugiʕt^{i} lamma ʃuft-u* I was taken by surprise when I saw him. - vn *mifagʕa*; ava *mifaagiʕ, mufaagiʕ↑*; pva *mufaagaʕ↑*.

مفاجأة *mufagʕa* /n pl *-aat*/ surprise. *kaanit mufagʕa saɛiida liyya* it was a happy surprise to me.

اتفاجئ *ʕitfaagiʕ* /vi/ to be caught by surprise or unprepared. - iva *mitfaagiʕ*.

ف ج ج

فجّ *fagg (i)* /vi/ to burst forth, pour forth (of odour, light etc.). - vn *fagg, fagagaan*; ava *faagig*.

ف ج ر ^{1}

فجر *fagar (u)* **1** /vt/ to burst open. *ʕil-ɛarabiyya daasit ik-koora fagarit-ha* the car ran over the ball and burst it. ‖ *raaḥit mafguura fil-ɛiyaaṭ* she burst into tears. **2** /vi/ to overstep the bounds of decency. *kull^{i} maada wi-b-tufgur illi ḥawaleek* the more time passes the more

outrageous your behaviour becomes and the more you harm those around you. *ʕamil-ni b-fugr* he treated me outrageously. - vn *fugr, fagr, fuguriyya, fuguurˀ*; ava *faagir*; pva *mafguur, mafguur*.

فجر *fugr* /n/ immorality.

فجريّة *fuguriyya* = *fugr*.

فجرة *fagra* /pl *-aat*/ instance noun of *fagr*. ‖*ya fagrit-i minkum* I've had all I can stand from you!

فاجر *faagir* /n * and pl *fagara, fuggar*/ libertine, rake.

فاجرة *fagra* /n pl *-aat*/ loose woman.

فجر *fagr* /n/ **1** dawn. *maʕa ʔawwil xiyuuṭ il-fagr* at the crack of dawn. **2** morning prayer, the first of the five obligatory daily prayers of Islam.

فجريّة *fagriyya* /n/ (time of) dawn.

أفجر *ʔafgar* /el/ more/most immoral.

انفجر *ʔinfagar* /vi/ **1** to burst, be burst. **2** to explode, be exploded. *ʔil-ɋunbila nfagarit ʕaleehum* the bomb exploded on them. - vn *ʔinfigaar*; ava/iva *minfigir*.

انفجار *ʔinfigaar* /n pl *-aat*/ explosion. *simiʕna ṣoot infigaar* we heard (the sound of) an explosion. *ʔil-infigaar is-sukkaani* the population explosion.

اتفجر *ʔitfagar* = *ʔinfagar*. - ava/iva *mitfigir*.

فجّر *faggar* /vt/ to blow up, cause to explode. *faggaru g-gabal bid-dinamiit* they blasted through the hill with dynamite. - vn *tafgiir*; ava/pva *mifaggar*.

اتفجّر *ʔitfaggar* /vi/ to be blown up, be exploded. - iva *mitfaggar*.

متفجّرات *mutafaggiraatˀ* /pl n/ explosives.

ف ج ر ² see ف ج و ر: *faguura*

ف ج ع ¹

فجع *fagaʕ ¹ (a)* /vt/ to afflict, cause anguish to. *rabb-i-na fagaʕ-na biik* the good Lord has punished us with your presence! -/the literary passive occurs/ *fugiʕna lamma fufna g-garḥa* we were deeply distressed when we saw the wounded. - vn *fagaʕaan*; ava *faagiʕ*; pva *mafguuʕ*.

فاجعة *faagiʕa, fagʕa ¹* /n pl *fawaagiʕ*/ calamity, disaster.

فجيعة *fagiiʕa* /n pl *fagaayiʕ*/ calamity, misfortune, disaster.

اتفجع *ʔitfagaʕ ¹* /vi/ to be or become deeply distressed, suffer great anguish. *ʔitfagaʕit lamma diryit bi-moot ibn-a-ha* she was grief-stricken when she heard the news of her son's death. - ava/iva *mitfigiʕ*.

انفجع *ʔinfagaʕ ¹* = *ʔitfagaʕ ¹*. - ava/iva *minfigiʕ*.

ف ج ع ²

فجع *fagaʕ ² (a)* /vt/ to arouse greed in, make gluttonous. - vn *fagaʕaan*; ava *faagiʕ*; pva *mafguuʕ*.

مفجوع *mafguuʕ* /adj */ gluttonous.

فجعة *fagʕa ²* /n/ gluttony.

فجعان *fagʕaan* /adj */ gluttonous. see further under ف ج ع ن

فجاعة *fagaaʕa* = *fagʕa ²*.

اتفجع *ʔitfagaʕ ²* /vi/ **1** to become maddened with desire, have one's appetite strongly aroused. *ʔitfagaʕt' lamma ʃuft-a-ha ʕiryaana* I went crazy with desire when I saw her naked. *ʔitfagaʕ lamma famm il-laḥma l-maʃwiyya* appetite overwhelmed him when he smelled the grilled meat. **2** to become a glutton. *kaanit nifs-u ʕafiifa fil-ʔakl' w-min saaʕit ma mifi wayyaahum itfagaʕ* he had a delicate appetite (at first), but from the moment he started going around with them he turned into a glutton. - ava/iva *mitfigiʕ*.

انفجع *ʔinfagaʕ ²* = *ʔitfagaʕ ²*. - ava/iva *minfigiʕ*.

ف ج ع ن see also ² ف ج ع

فجعنة *fagʕana* /n/ gluttony, greed.

اتفجعن *ʔitfagʕan* /vi/ to be gluttonous, eat ravenously. - ava *mitfagʕan*.

ف ج ف ج

فجفج *fagfig* /vi/ to spread all over (of odours, light, and the like). - vn *fagfaga*; ava *mifagfig*.

اتفجفج *ʔitfagfig* /vi/ = *fagfig*. - ava *mitfagfig*.

ف ج ل

فجل *figl* /coll n/ radish(es). *lubya ya figl' lubya [vendor's cry]* radishes (as tender as) black-eyed peas! *figl' baladi* type of white elongated radish native to Egypt. *figl afrangi* round red-skinned radishes.

فجلة *figla* /unit n, pl *-aat*/ a radish.

فجلاية *figlaaya* = *figla*.

ف ج و

فجوة *fagwa* /n pl *-aat*/ gap, breach.

ف ج و ر

فجورة *faguura* <It *figura*> /n/ court card, face card.

ف ح ت

فحت *faḥat (a)* **1** /vt/ to dig, dig up, excavate (especially a wide area). *faḥatu f-faariʕ kull-u* they dug up the whole street. **2** /vi/ to dig, dig around (especially over a wide area). *ʕammaliin bi-yifḥatu f-waadi l-miluuk yidawwaru ʕala maɋaabir gidiida* they're always digging in the Valley of the Kings in search of new tombs. ‖ *ʔil-faaḥit naazil wil-baani ṭaaliʕ [prov]* (the digger de-

scends and the builder rises) ≈ the malicious will come to harm and the good will flourish. - vn *faḥataan, faḥt*; ava *faaḥit*; pva *maḥfuut*.

فحت *faḥt* /n pl *fuḥuut*/ hole, trench, excavation.

فحتة *faḥta* /inst n, pl *-aat*/ an excavation, a dig.

اتفحت *ʔitfaḥat* /vi/ to be dug, be dug up, be excavated. - iva *mitfiḥit*.

انفحت *ʔinfaḥat* = *ʔitfaḥat*. - iva *minfiḥit*.

فحّت *faḥḥat* **1** /vt/ to dig up or excavate repeatedly. **2** /vi/ to dig around. - vn *tafḥiit*; ava/pva *mifaḥḥat*.

اتفحّت *ʔitfaḥḥat* /vi/ passive of *faḥḥat* 1. - iva *mitfaḥḥat*.

ف ح ر

فحر *faḥar (a, u)* /vt/ **1** to dig. *bi-yifḥaru ʃ-ʃaariɛ ɛaʃaan il-mawasiir* they dig up the street on account of the pipes. ‖ *ʔallaah yifḥar rooḥ-u* God's curse on his soul! (of one deceased). **2** to make a groove or grooves in, chisel, carve, etc. — /vi/ **3** to dig, make holes. *ma-tifḥar-ʃ*^{i} *fil-ḥeeṭa* stop scratching holes in the wall! ‖ *bi-yifḥar waraaya* he's scheming behind my back. - *bi-yifḥar ɛaleeha* he's looking for it everywhere. - vn *faḥr*; ava *faaḥir*; pva *mafḥuur*.

مفحور *mafḥuur* /adj * and pl *mafaḥiir*/ accursed, damned (of a deceased person). *wil-mafḥuur gooz-ik kunti ɛayʃa maɛaa ʔizzaay* ≈ your late husband - damn his black soul - how could you live with him? - *ya wlaad il-mafaḥiir* ≈ you offspring of the damned!

فحرة *fuḥra* /n pl *-aat, fuḥar*/ hole.

فحيرة *faḥiira* /n pl *faḥaayir*/ ditch, trench.

مفحار *mufḥaar* /n pl *mafaḥiir*/ carpenter's chisel.

اتفحر *ʔitfaḥar* /vi/ passive of *faḥar*. - iva *mitfiḥir*.

انفحر *ʔinfaḥar* = *ʔitfaḥar*. - iva *minfiḥir*.

فحّر *faḥḥar* /vt/ to dig repeatedly or in several places. *ʔil-ʔaraanib faḥḥarit il-ʔarḍiyya* the rabbits have dug up the ground. - vn *tafḥiir*; ava/pva *mifaḥḥar*.

اتفحّر *ʔitfaḥḥar*./vi/ passive of *faḥḥar*. - iva *mitfaḥḥar*.

ف ح ش

فحش *fuḥʃ* /n/ act of an outrageous or highly immoral sort.

فاحش *faaḥiʃ* /adj/ outrageous, extreme. *ẓulm*^{i} *faaḥiʃ* monstrous injustice.

فاحشة *faḥʃa, faaḥiʃa*$^{\uparrow}$ /n pl *fawaaḥiʃ*$^{\uparrow}$/ (act of) adultery, fornication.

فواحشي *fawaḥʃi* /adj * and pl *-yya*/ adulterous.

ف ح ص

فحص *faḥaṣ (a)* /vt/ to examine, scrutinize. *faḥaṣ il-waraɋa kwayyis ɋabl*^{i} *ma ḥaṭṭ*^{i} *ʔimḍit-u ɛaleeha* he scrutinized the paper carefully before signing it. - vn *faḥṣ*; ava *faaḥiṣ*; pva *mafḥuuṣ*.

فحص *faḥṣ* /n pl *fuḥuuṣ*/ test, examination. *fuḥuuṣ ṭibbiyya* medical tests.

اتفحص *ʔitfaḥaṣ* /vi/ to be examined, be scrutinized. - iva *mitfiḥiṣ*.

انفحص *ʔinfaḥaṣ* = *ʔitfaḥaṣ*. - iva *minfiḥiṣ*.

ف ح ك ش

فحكش *faḥkiʃ* /vt/ *[slang]* to put into disorder, disarrange. *faɛr-a-ha mfaḥkiʃ* her hair is dishevelled. - also *faɛkiʃ*. - vn *faḥkaʃa*; ava/pva *mifaḥkiʃ*.

اتفحكش *ʔitfaḥkiʃ* /vi/ *[slang]* to become disordered, be put into disorder. - vn *tifaḥkiiʃ*; ava/iva *mitfaḥkiʃ*.

ف ح ل

فحل *faḥl* /n pl *fuḥúla*/ **1** stud bull. ‖ *faḥl*^{i} *baṣal* large onion. **2** irrigation ditch (see Pl.E, 17).

أفحل *ʔafḥal* /el/ *[deris]* more/most hulking or oafish.

فحّل *faḥḥal* /vi/ *[deris]* to grow into a hulking oaf. - vn *tafḥiil*; ava *mifaḥḥal*.

استفحل *ʔistafḥal* **1** /vi/ to go too far, get out of hand. **2** /vt/ *[deris]* **2a** to consider hulking or oafish. **2b** to select as hulking or oafish. - vn *ʔistifḥaal*; ava *mistafḥil*.

ف ح م [1]

فحم *faḥm* /coll n, pl *fuḥumaat*/ charcoal(s), coal(s). ‖ *faḥm*^{a} *ḥagari* anthracite. - *faḥm*^{i} *nabaati* charcoal. - *faḥm*^{i} *kuuk* coke.

فحمة *faḥma* /unit n, pl *-aat*/ a piece of charcoal, a piece of coal.

فحماية *faḥmaaya* = *faḥma*.

فحمي *faḥmi* /adj/ charcoal-grey.

فاحم *faaḥim* /adj/ intense, saturated (of black colour). *ʃaɛr*^{i} *ʔiswid faaḥim* jet black hair.

فحّام *faḥḥaam* /n */ charcoal dealer, coal merchant.

فحّم *faḥḥam* **1** /vt/ to burn to ashes, reduce to charcoal. *faḥḥam il-xaʃab* he burned the wood down to charcoal. **2** /vi/ to be reduced to ashes, be reduced to charcoal. *law il-ḥaraara zaadit ɛan il-maṭluub il-bilastik bi-yfaḥḥam* if the required temperature is exceeded the plastic burns up. - vn *tafḥiim*; ava/pva *mifaḥḥam*.

اتفحّم *ʔitfaḥḥam* /vi/ to burn or be burnt to ashes, be or become reduced to charcoal. - iva/ava *mitfaḥḥam*.

ف ح م [2]

فحم *faḥam (i)* /vt/ to overcome (of weeping). - vn *faḥamaan*; ava *faaḥim*; pva *mafḥuum*.

اتفحم *ʔitfaḥam* /vi/ to be overcome (by weeping). - iva *mitfiḥim*.

انفحم *ʔinfaḥam* = *ʔitfaḥam*. - iva *minfiḥim*.

ف خ ت
فخت *faxat (a)* /vt/ to pierce. *faxatit ɛeen-u bi-ṣbaɛ-ha* she poked him in the eye with her finger. *raagil bi-ɛeen mafxuuta* a one-eyed man. - also *faxas*. - vn *faxataan, faxt*; ava *faaxit*; pva *mafxuut*.
اتفخت *ʔitfaxat* /vi/ to be pierced. - ava/iva *mitfixit*.
فخّت *faxxat* /vt/ to pierce (the eyes). ‖*ḥ-afaxxat-lak ɛenee-k* ≈ I'll give you hell. - vn *tafxiit*; ava/pva *mifaxxat*.
اتفخّت *ʔitfaxxat* /vi/ to be pierced (of the eyes). - iva *mitfaxxat*.

ف خ خ
فخ *faxx* /n pl *fuxuux, fixaax*/ trap, snare. *faxx' taɛlab* a fox trap. *wiqiɛ fil-faxx* he fell into the trap.

ف خ د
فخذ، فخذ *faxd* /fem n, pl *ʔifxaad, fixaad*/ thigh, haunch.
فخذة *faxda* /n pl *-aat, fixad*/ **1** *[butcher]* haunch, leg, shank. **2** thigh.

ف خ ذ see ف خ د

ف خ ر [1]
فخر *faxr* /n/ boasting, bragging. *bi-yḥibb il-faxr* he likes to show off. ‖... *wala faxr* ≈ and that's enough honour to speak for itself, as in *ʔana baqa bn' ɛali baaʃa wala faxr* I am the son of Ali Pasha - no need to say anything more.
أفخر *ʔafxar* /el/ more/most excellent. *ʔid-duxxaan da ʔafxar nooɛ* this tobacco is the finest.
فخور *faxuur* /adj */ proud, feeling pride. *ʔiḥna faxuriin biik* we're proud of you!
فاخر *faaxir* /adj/ of outstanding quality. *ʔakl' faaxir* superb food. *mubilya faxra* top quality furniture.
اتفاخر *ʔitfaaxar* /vi/ to boast, brag. *dayman yitfaaxar bi-fluus-u* he's constantly bragging about his money. - vn *tafaaxur*; ava *mitfaaxir*.
افتخر *ʔiftaxar* /vi/ to feel pride. *ʔabuu-ya miftixir biyya* my father is proud of me. - vn *ʔiftixaar*; ava *miftixir*.
مفتخر *muftaxar* **1** /adj/ = *faaxir*. ‖*ɋumaaʃ muftaxar* cheap quality cotton material for peasant galabiyas. **2** /n/ *ʔil-muftaxar* the Pullman train.

ف خ ر [2]
فخرانى *faxaraani* /n pl *-yya*/ potter, manufacturer of pottery.
فاخورة *faxuura* /n pl *fawaxiir*/ pottery workshop. *loola k-kasuura ma-kaanit il-faxuura' [prov]* were it not for breakages, there would be no potteries.
فاخورى *faxuuri* /n pl *-yya*/ potter.
فخّار *fuxxaar* /n/ fired clay, earthenware.

ف خ س
فخس *faxas (i)* /vt/ **1** to pierce (the eye). - also *faxat*. **2** to cause to sink. *ḥ-axfis biih il-ʔarḍ* I'll ram him into the ground! *ʔitwalad wi-ɋurt-u mafxuusa* he was born with a low forehead. - vn *faxs, faxasaan*; ava *faaxis*; pva *mafxuus*.
اتفخس *ʔitfaxas* /vi/ passive of *faxas*. - iva *mitfaxis*.
انفخس *ʔinfaxas* = *ʔitfaxas*. - iva *minfixis*.

ف خ ف خ
فخفخة *faxfaxa* /vn/ luxurious living.
اتفخفخ *ʔitfaxfax* /vi/ to live in luxury. - ava *mitfaxfax*.

ف د ح
فادح *faadiḥ* /adj/ heavy, serious. *xusaara fadḥa* heavy loss.

ف د ر
فودرة *fudra* <perh It *fodera*> /n pl *fudar*/ pressing cloth, ironing cloth.

ف د غ
فدغ *fadaɣ (a)* /vt/ to crack open, split open, burst open. *fadaɣ id-dimmil* he burst the pimple. *kaan il-baab misankar fa-raaḥ fadɣ-u b-maṭraqa fataḥit-u* the door was locked, so he broke it open with a hammer. - vn *fadɣ, fadaɣaan*; ava *faadiɣ*; pva *mafduuɣ*.
اتفدغ *ʔitfadaɣ* /vi/ to be cracked, split or burst open. - iva *mitfidiɣ*.
انفدغ *ʔinfadaɣ* = *ʔitfadaɣ*. - iva *minfidiɣ*.

ف د ن
فدّان *faddaan* /n pl *fadadiin, ʔifdina, fidn*/ land measure equal to 1.038 acres, feddan. ‖*ɋiraaṭ ḥaẓẓ' wala faddaan faṭaara [prov]* ≈ an ounce of luck excels a pound of wit. - *ɋiraaṭ fil-liyya wala faddaan fil-kuruuʃ [prov]* ≈ quality counts more than quantity.

ف د و see ف د ى : *fadw*

ف د ى
فدى *fada (i)* /vt/ to ransom, redeem. *fadeet ṣiyaam-i b-taʔkiil ɛiʃriin maskiin* I redeemed my (not) fasting by feeding twenty poor souls. *ʔiʃ-ʃuhada raaḥu fida l-maṣr* the war dead died as a ransom for Egypt. *kull-u yhuun fida lil-ɛarabiyya* any sacrifice is worth it for the car.

‖*fadaa-k* it has gone as a ransom for you, it has taken the danger that was around on itself and left you unharmed (polite expression used to one who has broken or lost something). - *ʕafdii-k bi-rooḥ-i* I would lay down my life for you, I'd do anything for you. - vn *fady, fadw, fida*; ava *faadi*; pva *mafdi*.

فدو *fadw* /n/ *[Isl]* food or money given to the poor in compensation for the omission of certain religious duties.

فادى *faadi* /n/ *[Chr]* Redeemer (epithet of Jesus Christ).

فدية *fidya* /n pl *-aat*/ ransom. *xaṭafu l-ɛayyil wi-ṭalabu fidya* they kidnapped the child and demanded a ransom.

فداء *fidaaʕ* /n/ *[Chr]* redemption.

فدائى *fidaaʕi* /n */ commando, one of the fedayeen.

فادى *faada* /vt/ to avoid (e.g., hitting s.th.). *dust[i] faraamil ɛafaan ʕafaadi l-maṭabb* I stepped on the brakes to avoid (hitting) the pot-hole. - vn *mifadiyya*; ava/pva *mifaadi*.

اتفادى *ʕitfaada* **1** /vt/ to avoid, keep away from. *bi-titfadaa-ni leeh* why are you avoiding me? **2** /vi/ passive of *faada*. - vn *tafaadi*; ava/iva *mitfaadi*.

ف ذ ل ك see ف ز ل ك

ف ر ت ت

فروتة *firutta, furutta* <It *frutta*> /n/ **1** /coll/ fruit(s) (on a restaurant menu). **2** fruit flavours (of hard candy, ice cream). *firutta mʃakkila* assorted fruit-flavoured sweets.

ف ر ت ك [1]

فرتك *fartik* /vt/ **1** to rip apart, tear (to pieces). *ʕafartik-ak ḥitat* I'll rip you to pieces! **2** to squander (money). - also *fartin*. - vn *fartaka*; ava/pva *mifartik*.

اتفرتك *ʕitfartik* /vi/ to be ripped apart. *ʕik-kawitʃ[i] mitfartik* the tyre is in shreds. - vn *tifartiik*; ava *mitfartik*.

ف ر ت ك [2] see ف ر ت ى ك : *furteeka*

ف ر ت ن [1]

فرتن *fartin[1]* /vt/ to squander, waste. *fartinit il-ɢirfeen* she squandered the money. - also *fartik*. - vn *fartana*; ava/pva *mifartin*.

اتفرتن *ʕitfartin[1]* /vi/ to be squandered, be wasted. - iva *mitfartin*.

ف ر ت ن [2]

فرتينة *furteena* <perh T *fırtına* from It> /n/ trouble, discord. *dayman tiɛmil furteena been in-naas* she is constantly trying to stir up trouble between people.

فرتن *fartin[2]* /vt/ to separate, cause a rift between. *tann-u waraahum lamma fartin-hum min baɛḍ* he wouldn't rest until he had caused a rift between them. - vn *fartana*; ava/pva *mifartin*.

اتفرتن *ʕitfartin[2]* /vi/ to be separated, be split (up). - iva *mitfartin*.

ف ر ت ى ك

فورتيكة *furteeka*↓ <perh Gr *phourketa*> /n pl *-aat, faratiik*/ hairpin.

ف ر ج [1]

فرج *farag[1] (i)* /vt/ to alleviate, dispel. *rabb-i-na yifrig-ha* may God show (us) a way out! - /the literary passive occurs/ *furigat (wal-ḥamdu li-llaah)* everything is all right now (thank heavens)! - vn *farag, faragaan*; ava *faarig*; pva *mafruug*.

فرج *farag[2]* /n/ release, deliverance. *farag rabb-i-na* a godsend.

فرج *farg* /n pl *furuug*/ female genitalia.

فرج *firig* /adj/ large, roomy, spacious. *ṣaala firga* a large hall.

فرجيّة *faragiyya* /n pl *-aat*/ loose robe, wide gown (worn by religious figures).

فرّاج *farraag: ʕabu farraag* the Great Deliverer, epithet of el-Sayyid Badawi.

اتفرج *ʕitfarag* /vi/ to be alleviated, be dispelled. - iva *mitfirig*.

فرّج *farrag[1]* /vt/ to alleviate, dispel. *rabb-i-na yfarrag diɋt-ak* may God dispel your worries! - vn *tafriig*; ava/pva *mifarrag*.

اتفرّج *ʕitfarrag[1]* /vi/ to be alleviated, be dispelled. - iva *mitfarrag*.

أفرج *ʕafrag* **1** /vt/ to provide (a problem or dilemma) with a timely solution (of God). *bi-nistanna l-ḥadd[i] ma rabb-i-na yifrig-ha ɛaleena b-faɤɤaala kwayyisa* we're biding our time until, God willing, a suitable maid turns up. *bukra rabb-i-na yifrig-ha* ≈ tomorrow is another day. **2** /vi/ to grant release, grant freedom. *ʕafragu ɛannu b-kafaala* they released him on bail. - vn *ʕifraag*; ava *mufrig*; pva *mufrag*.

إفراج *ʕifraag* **1** /vn/ ‖ *ʕizn[i] ʕifraag* release permit (specifically for goods in customs). - *ʃihaadit ʕifraag ḍariibi* certificate showing that taxes have been paid in full (required of an heir before he can claim his inheritance). **2** /n/ release permit. *ʕifraag karantiina* quarantine release permit.

افترج *ʕiftarag* /vi/ to ease up, let up (of a problem, crisis

etc.). ‖*ma daaqit ʕilla ma ftaragit [prov]* ≈ the darkest hour comes before dawn. - vn *ʕiftiraag*; ava *miftirig*.

مفترج *muftarag: leela muftaraga* night of joy.

ف ر ج ²

فرجة *furga* /n/ **1** /vn/ viewing. *furgit iz-zaffa kwayyisa min il-balakoona* there is a good view of the bridal procession from the balcony. *madaam ʕintu miʃ qadd il-furga waqfiin tibaḫlaqu leeh* since you can't afford to watch (the show), why are you standing and staring? **2** sight, show, spectacle. *lamma daxalit ḫamaat-u fil-xinaaqa baqit furga* when his mother-in-law joined in the row it became a (real) spectacle! ‖*ʕarabiyya furga* a stylish car.

فرّج *farrag*² /vt/ to show, cause to look. *farrag-ni ʕala l-ʕiwaq* show me the rooms! *win-nabi l-afarrag-ha* ≈ by God, I'll show her a thing or two! ‖*farrag in-naas* (or *xalq illaah) ʕalayya* he made a public spectacle of me. - *ʕilli ḫabb-u rabb-u farrag-u ʕala mulk-u [prov]* God will show his kingdom to whom He loves (i.e., he will enable him to travel). - vn *tafriig*; ava *mifarrag*.

اتفرّج *ʕitfarrag*² /vi/ to look, take a look. *ʕaawiz ʕatfarrag fiwayya min if-fibbaak* I want to look out of the window a bit. *taʕaala ʕitfarrag ʕala beet-i g-gidiid* come and have a look at my new house. ‖*xalla lli ma yiftiri yitfarrag* to make a public spectacle, make a scene, as in *ḫ-astanna li-ḫadd' ʕaaxir if-ʃahr' w-ʕiza ma-dafaʕt'-ʃ ḫ-axalli lli ma yiftiri yitfarrag* I'll give you till the end of the month and if you don't pay I'll make a real scene. - ava *mitfarrag*.

متفرّج *mutafarrig*↑ /n */ spectator, onlooker, member of an audience.

ف ر ح

فرح *firiḫ (a)* /vi/ **1** to become happy, glad or joyful, rejoice. *ʕil-balad kullit-ha firḫit* the whole town rejoiced. *firiḫt' bil-hadiyya* I was overjoyed with the present. **2** to celebrate, hold a celebration. *ʕiz-zaahir ʕinn' ma-ḫadd'-ʃ fil-bilaad di yiʕraf yifraḫ min ʕeer mikrufoon wi-xamas sammaʕaat* it seems no one in this country knows how to celebrate without a microphone and five loudspeakers. *gat il-ḫaziina tifraḫ ma-laqit-ʃ' laha maṭraḫ [prov]* ≈ one who is born to suffer will find no opportunity to rejoice. ‖*ʕayziin nifraḫ biik* we're looking forward to seeing you married. - vn *faraḫ*; ava *farḫaan*.

¶ *firiḫ fi-* to gloat over (s.o's misfortunes).

فرح *faraḫ* /n pl *ʕafraaḫ*/ **1** joy. *ʕil-faraḫ id-daayim yiʕallim ɪr-raqṣ [prov]* (unceasing joy teaches dancing) ≈ practice makes perfect. **2** wedding celebration. **3** festivity. *ʕin-fa-lla fil-ʕafraaḫ* ≈ may we eat and drink with you on happy occasions (said to a host).

فرح *farḫ* /n/ joyousness. *fi-farḫ-u-hum mansiyyiin wi-f-hamm-u-hum madʕiyyiin [prov]* (you're) forgotten when they're happy, but invited to share their woes.

فرحة *farḫa* /n/ joy.

فرحان *farḫaan* /adj */ happy, joyful.

فرايحي *farayḫi* /adj invar/ cheerful, gay (of colours, music). *galabiyya zarqa farayḫi* a bright blue galabiya. ‖*ganaaza farayḫi* (or *farayḫiyya*) (1) *[joc]* a funeral where the feeling is one of relief rather than grief. (2) *[Chr]* in the Orthodox Church, a prayer for those who die during the fifty days between Easter and Pentecost, during which period funeral services do not take place.

فرّح *farraḫ* /vt/ to delight, cause joy to, make happy. *ʕir-raqṣ' b-yfarraḫ-na kull-ɪ-na* we all like dancing. *ya xabar yifarraḫ* what joyous news! - vn *tafriiḫ*; ava/pva *mifarraḫ*.

تفاريح *tafariiḫ* /pl n/ gaiety, fun-making. *da bass' mgarrad tafariiḫ* that's just for fun. *ḫa-yraqquu-k tafariiḫ* they'll promote you just for the fun of it.

ف ر ح ف -

فرحفزة *faraḫfaza* <P *farah-afzâ*> /n/ *[mus]* mode in Arabic music beginning on G and having B flat and E flat.

ف ر خ ¹

فرخ *farx'* /pl *furúxa*/ **1** /n/ chick. *ʕil-farx il-faṣiiḫ fil-beeḍa yṣiiḫ [prov]* (the bright chick crows while it's still in the egg) talent shows itself early. **2** /masc and fem adj/ thickset, heavily built, stocky. — /n pl *ʕifrux*/ **3** one of the connecting pieces which make up a *maʃrafiyya* design (see Pl.G, 4).

فرخة *farxa* /n pl *-aat, firaax*/ hen, chicken. *firaax ʕingiliizi* any large variety of chicken similar to Rhode Island Reds. ‖*zayy il-farxa d-dayxa* ≈ too tired to think straight, whacked, bushed.

فرّخ *farrax* **1** /vt/ to incubate (eggs). *maʕmal tafriix* chicken incubator. **2** /vi/ to incubate (of eggs). - vn *tafriix*; ava *mifarrax*.

اتفرّخ *ʕitfarrax* /vi/ to be incubated, be hatched artificially. - iva *mitfarrax*.

ف ر خ ²

فرخ *farx*² /n pl *furuux, ʕufrux, furúxa*/ sheet (of paper).

ف ر د [1]

فرد *farad, firid (i)* **1** /vt/ to straighten, extend. *ʕifrid diraaɛ-ak* stretch out your arm! *ʕifrid if-firaaɛ* unfurl the sail! *faradit il-ħaṣiira fif-fams* she spread out the mat in the sun. *faradt il-ɛagiina* I rolled (or stretched) out the dough. *faɛr-a-ha mafruud* she's had her hair straightened. ‖ *ʕifrid wiff-ak* don't frown so! cheer up! **2** /vi/ to become straight, become extended. *fuuf il-walad firid ʕizzaay* see how the boy has grown! - vn *faradaan, fard*; ava *faarid*; pva *mafruud*.

فردة *farda* [1] /pl *-aat*/ instance noun of *fard*. ‖ *kaan wiff-u mafruud farda* he grinned from ear to ear.

اتفرد *ʕitfarad* /vi/ to be straightened out, be extended. *ʕit-toob bi-yiigi malfuuf wi-baɛdeen yitfirid* the bolt of cloth comes rolled up and then it is unwound. *ʕil-ɛagiina b-titfirid bi-naffaaba* the dough is rolled out with a rolling-pin. ‖ *ʕitfirid fiwayya* relax! unwind a bit! - iva *mitfirid*.

انفرد *ʕinfarad* = *ʕitfarad*. - iva *minfirid*.

فرّد *farrad, farrad* /vt/ to spread out. *farradu s-sibaax ɛal-ʕarḍ* they spread the manure over the ground. *farradit ir-ruzz[a] ɛaʃaan tinaqqii* she spread out the rice so she could pick it over. - vn *tafriid*; ava/pva *mifarrad, mifarrad*.

اتفرّد *ʕitfarrad, ʕitfarrad* /vi/ to be spread out. - iva *mitfarrad, mitfarrad*.

ف ر د [2]

فرد *fard*↑ /n/ **1** /pl *ʕafraad*/ a single person, an individual. *fard[i] min il-ʕusra* a member of the family. *raʕiis ʃuʕuun il-ʕafraad* personnel manager. **2** /no pl/ **2a** One (epithet of God). **2b** epithet of Rajab, the seventh month in the Muslim year.

¶ *ʕafraadan: ʕagwaazan wi-ʕafraadan* to an extreme degree.

فرد *fard* /n/ **1** /in apposition/ **1a** a single unit (as opposed to a double or compound unit). *muftaaḥ fard* a single switch. *suluuk fard* single-strand wires. *siriir fard* a single bed, a bed for one person. **1b** odd number. **2** male pigeon. — /pl *furuud*/ **3** pistol. — /pl *furuud, furúda*/ **4** large type of *ɢuffa*.

فردة *farda* [2] /n pl *-aat, firad*/ **1** one of a pair. *farditeen gazma ʃmaal* two left shoes. **2** (also *fardit kawitʃ*) (automobile) tyre. **3** *[agric]* one of the major sections into which a field is divided to facilitate the control of irrigation (see Pl.E, 18). **4** pistol. — /pl *-aat* only/ **5** piece of hashish of approximately half a kilo in weight.

فردى *fardi* /adj **/ individual. *raʕy[i] fardi* individual opinion.

فردى *fardi* /adj/ odd (of numbers).

فردة *firda* /adv/ separately, alone, apart from others. *ɢaɛdiin firda l-waḥdii-hum* they are sitting alone.

فردانى *faradaani* /adj invar/ **1** composed of a single unit. *sillim faradaani* a straight (as opposed to a folding) ladder. **2a** accomodating one person. *ʕooḍa faradaani* a single room. *ṭayyaara faradaani* a single-seater plane. **2b** pulled by one animal (of a vehicle). *ɢarabiyya faradaani* a one-horse (or one-donkey) cart. — /adv/ **3** alone. *huwwa ɢaayiʃ faradaani* he lives alone. *b-aḥibb[i] ʕaakul faradaani* I like to eat alone.

فريد *fariid* /adj/ **1** lonely, solitary. *ɢaazib wi-ɢaayiʃ fariid waḥiid* he's a bachelor living all alone and by himself. **2** unique, matchless, peerless. *farḥid il-ḥusn* of singular beauty. *di zahra fariida f-noɛ-ha* it's a unique kind of flower.

فرّادى *farraadi, farraadi* = *faradaani*.

انفرد *ʕinfarad*↑ /vi/ **1** to withdraw, retire alone (with s.o.). *ʕinfarad biyya ɢaʃaan yiqul-li l-xabar* he took me off alone to tell me the news. **2** to stand alone, be unique. *ʕil-maḥall[i] da b-yinfirid bi-nooɛ ig-gizam di* this store is the only one to have that type of shoe. - vn *ʕinfiraad*; ava *minfirid, munfarid*.

انفرادى *ʕinfiraadi*↑ /adj/ individual, solitary. *ḥabs infiraadi* solitary confinement.

منفرد *munfarid*↑ /adj **/ single, individual. *tamrinaat munfarida* individual exercises.

مفرد *mifrid* /adj invar/ composed of a single unit. *mafatiiḥ mifrid* single switches. *ṭayyaara b-karaasi mifrid* a plane with single seats.

مفرد *mufrad* **1** /n/ *[gram]* singular. **2** /adj/ single. *xaṭṭ[i] mufrad* single-track railway line.

¶ *bi-mufrad-(u)* /adv/ alone. *misaafir bi-mufrad-u* he's travelling by himself.

مفردانى *mufradaani* /adj/ single.

مفردات *mufradaat*↑ or *mufradaat*↑ /pl n/ **1** units, individual items. *mufradaat il-murattab* the individual items contained in a breakdown of the salary. **2** lexical items. *mufradaat il-luɣa* the lexicon, or vocabulary, of the language.

استفرد *ʕistafrad* /vi/: *ʕistafrad bi-* to take advantage of (s.o.'s being alone). *baɛd[i] ma miskuu ʕistafradu bii w-ḍarabuu* after they caught him, they took him off alone and beat him up. *ʃaf-ni maqṭuuɛa min-ʃagara wi-stafrad biyya* he saw that I was alone in the world and took advantage of me. - vn *ʕistifraad*; ava *mistafrad*.

ف ر د و س

فردوس *firdoos* /n/ paradise.

ف ر ر [1]

فرّ *farr, farr (i)* **1** /vi/ to run fast. *firr' waraa ʕilḥaq-u* zip after him and catch up with him. *farr' minni* he sped away from me. *ʕid-dumuuʕ farrit min ʕeen-u* he wept uncontrollably. **2** /vt/ to flip through, go quickly through (a book, or the like). *ḥ-afirr ik-kitaab qabl' m-axuff il-imtiḥaan* I'll have a quick flip through the book before I go into the exam. - vn *firaar, farr*; ava *faarir*; pva *mafruur*.

فرّة *firra* /n pl *-aat, firar*/ epidemic (particularly among poultry). *firrit kulira* cholera epidemic.

فرار *faraar* /adj invar/ slippery. *dool naas faraar* they are shifty customers.

فرّيرة *furreera* /n pl *-aat, fararriir*/ **1** spinning-top. ‖*ʕadda zayy' il-furreera* he flashed past. **2** epidemic.

ف ر ر [2]

فرارجي *farargi* /n pl *-yya*/ poulterer.

ف ر ز [1]

فرز *faraz' (i)* /vt/ **1** to sort, separate into components or parts. *farz' ʕaṣwaat* vote-sorting. *faraz il-laban* to skim milk. **2** to scrutinize. *farazu l-ʕaruusa min taḥt' l-fooq* they inspected the bride from top to toe. - vn *farz, farazaan*; ava *faariz*; pva *mafruuz*.

فرز *farz* **1** /vn/ ‖*laban farz* skimmed milk. **2** /n/ *[mil]* medical test for recruits.

فرزة *farza* **1** /inst n, pl *-aat*/ a sorting. *quṭn' ʕawwil farza* first-grade cotton. **2** /adj invar/ rejected. *xiyaar farza* small poor-quality cucumbers.

فرّازة *farraaza, farraaza* /n pl *-aat*/ machine for sorting or separating. ‖*mitnaqqiyyiin ʕal-farraaza* selected with great care.

فرّيز *farriiz* /n pl *farriiza*/ one who sorts or grades. *farriiz quṭn* cotton grader.

اتفرز *ʔitfaraz* /vi/ to be sorted, be separated into components. - iva *mitfiriz*.

انفرز *ʔinfaraz* = *ʔitfaraz*. - iva *minfiriz*.

ف ر ز [2]

فريزة *fariiza* or *fireeza* <Fr *fraise*> /n pl *-aat, faraayiz*/ **1** *[metal]* milling machine. **2** *[dent]* dental unit. **3** ream (of paper).

فرّز *farraz* /vt/ **1** *[carp]* to cut a rabbet in. **2** *[metal]* to mill. - vn *tafriiz*; ava/pva *mifarraz*.

تفريزة *tafriiza* /n pl *-aat*/ *[carp]* rabbet.

اتفرّز *ʔitfarraz* /vi/ **1** *[carp]* to be rabbeted. **2** *[metal]* to be milled. - iva *mitfarraz*.

ف ر ز [3]

فرز *faraz [2] (i)* /vt/ to secrete, ooze. *ʔig-garḥ' b-yifriz midda* the wound is oozing pus. - ava *faariz*; pva *mafruuz*.

أفرز *ʔafraz* /vt/ to secrete, ooze. - vn *ʔifraaz*; ava *mifriz, mufriz*↑; pva *mufraz*↑.

إفراز *ʔifraaz* /n pl *-aat*/ secretion.

ف ر ز [4] see ف ر و ز : *faruuz, faruuz, faruuzi*

ف ر ز [5] see ف ر ي ز : *firiiz*

ف ر س [1]

فرس *faras* /n pl *ʔafraas*/ mare, (loosely) horse. ‖*faras in-nabi* praying mantis. - *faras il-baḥr* hippopotamus.

فرسة *farasa* /n pl *-aat*/ **1** mare. **2** bridge (of a stringed instrument, see Pl.J, 14).

فروسيّة *furusiyya* /n/ horsemanship.

فارس *faaris'* /n pl *firsaan, fursaan*/ **1** horseman. **2** knight.

فوارس *fawaaris: ʔabu l-fawaaris* Father of Horsemen (epithet of Antar (*ʕantar ibn' ʃaddaad*), and thus of any brave man).

ف ر س [2]

فريسة *fariisa* /n pl *-aat, faraayis*/ prey.

افترس *ʔiftaras* /vt/ to devour (of an animal). *ʔit-taʕlab iftaras il-farxa* the fox devoured the chicken. ‖ *ʔiftarasit-na fil-kalaam* she beat us hands down in the discussion. - vn *ʔiftiraas*; ava *muftaris*.

ف ر س [3]

فراسة *faraasa* /n/ intuitive understanding.

اتفرّس *ʔitfarras* /vi/ to gaze intently (into s.o.'s face). *laqeet-u b-yitfarras fi-wiff-i zayy' ma ykuun yifabbih ʕalayya* I found him scrutinizing my face as if trying to place me. - ava *mitfarras*.

ف ر س [4]

فرس *faras (i)* /vt/ to infuriate, enrage. - vn *farasaan*; ava *faaris*; pva *mafruus*.

فرسة *farsa* /inst n, pl *-aat*/ an enraging. *ʃamma faras-ni farsa* did he ever make me furious!

اتفرس *ʔitfaras* /vi/ to be or become infuriated, be or become enraged. - ava/iva *mitfiris*.

انفرس *ʔinfaras* = *ʔitfaras*. - ava/iva *minfiris*.

ف ر س [5]

فارس *faaris [2]* /prop n/ Persia.

فارسي *farsi, faarisi*↑ **1** /adj */ Persian. ‖*xaṭṭ' farsi* a flowing slanted Arabic script. **2a** /n *-* and pl *furs*/ a Persian. ‖*bilaad il-furs [obsol]* Persia. **2b** /no pl/ the Persian language.

ف ر س ك ا
فرسكا *firiska* <perh It *fresca*> /n/ **1** type of lightweight woollen material. **2** sweet biscuit popular at beach resorts, made of two wafers stuck together with honey or other filling.

ف ر س ل ى
فرسالية *firsalya* /n/ type of stiff artificial silk (used in linings).

ف ر س ن ت
فروسنت *furusint* <Engl>: *lamba furusint* fluorescent light. - also *fulurusint*.

ف ر ش ¹
فرش *faraʃ, faraʃ (i)* /vt/ **1** to spread, lay out. *bi-nifriʃ il-baṭaṭiin fooq is-suṭuuḥ* we lay the blankets out on the roof. ‖*faraʃit-lu l-milaaya* ≈ she bawled him out, cursed him and made a public spectacle of it all. **2** *[constr]* to lay out (a roof) by putting in the reinforcement rods prior to laying the concrete. **3** to furnish, provide the necessary accoutrements. *faqqa mafruuʃa* a furnished flat. *faraʃit is-siriir* she made up the bed. - vn *farʃ*; ava *faariʃ*; pva *mafruuʃ*.
فرش *farʃ* /n/ **1** furnishings, appointments. *farʃ il-ʕooḍa* the furnishings of the room. *farʃ il-ɛarabiyya* the interior (furnishings and accessories) of the car. *farʃ[a] ɛaza* a set of (caterer's) furnishings for condolence ceremonies (e.g., a marquee, chairs, loudspeakers etc.). ‖*farʃ[i] gazma* insoles. **2** working surface (e.g., a counter-top, the top of a vendor's stall). **3** bedding. *hawwi l-farʃ* air the bedding. *milayaat farʃ* bed sheets. ‖*farʃ[i] w-ɤaṭa* everything. **4** *[constr]* bottom layer of a two layer grid of metal rods over which concrete is poured to form a floor or roof.
فرسة *farʃa* /n pl *-aat*/ **1** set of bedding. **2** pavement vendor's spread of merchandise. **3** = *farʃ* 4.
فراش *faraaʃ* /coll n/ **1** butterflies. **2** moth(s).
فراشة *faraaʃa* /n pl *-aat*/ **1** /unit n/ **1a** a butterfly. **1b** a moth. **2** butterfly stroke (in swimming).
فراشة *firaaʃa* /n/ **1** /pl *-aat*/ caterer's set of furnishings for a marriage, mourning ceremony, or the like (i.e., a marquee, chairs, microphones etc.). **2** /no pl/ *ʃil-firaaʃa* catering, the catering profession.
فرّاش *farraaʃ* /n */ office employee with janitorial and messenger duties, office servant.
مفرش *mafraʃ* /n pl *mafaariʃ*/ **1** table-cloth, table-mat. **2** bed spread.
اتفرش *ʃitfaraʃ* /vi/ passive of *faraʃ*. - iva *mitfiriʃ*.
انفرش *ʃinfaraʃ* = *itfaraʃ*. - iva *minfiriʃ*.

فرّش *farraʃ[1]* /vi/ to sprawl, lie spread-eagled. *ɛarabiyya xabaṭit-u nizil mifarraʃ ɛal-ʃarḍ* a car ran into him (and) he fell sprawled out on the ground. - vn *tafriiʃ*; ava *mifarraʃ*.

ف ر ش ²
فرشة *furʃa* <T *fırça*> /n/ **1** /pl *furaʃ*/ brush. *furʃit id-daqn* shaving brush. **2** *[coarse]* frottage.
فرّش *farraʃ[2]* /vt/ **1** to brush. **2** *[coarse]* to indulge in frottage with. - vn *tafriiʃ*; ava/pva *mifarraʃ*.
مفرّشاتي *mifaraʃaati* /n pl *-yya*/ frotteur.
اتفرّش *ʃitfarraʃ* /vi/ **1** to be brushed. **2** *[coarse]* to be subjected to frottage. - iva *mitfarraʃ*.

ف ر ش ح
فرشح *farʃaḥ* (also *farʃax*) **1** /vt/ to spread apart, spread open. *farʃaḥ riglee* he opened his legs. *farʃaḥit il-furʃiina* she opened the hairpin. **2** /vi/ to spread apart, spread open. - vn *farʃaḥa*; ava/pva *mifarʃaḥ*.
اتفرشح *ʃitfarʃaḥ* /vi/ to be spread apart, be spread open. - iva *mitfarʃaḥ*.

ف ر ش خ see ف ر ش ح : *farʃax*

ف ر ش ى ن
فرشينة *furʃiina* <It *forcina*> /n pl *farʃiin*/ hairpin.

ف ر ص
فرصة *furṣa* /n pl *-aat, furaṣ*/ opportunity.
فرصجي *furṣagi* /n pl *-yya*/ opportunist.

ف ر ض
فرض *faraḍ (i)* /vt/ **1** to impose, make incumbent. *damm-u tqiil wi-b-yifriḍ wuguud-u ɛaleena leel winhaar* he's an insensitive boor and imposes his presence on us day and night. *bi-yifriḍ ɛaleehum ʃataawa* he makes them pay protection money. *ṣiyaam mafruuḍ* obligatory fasting. **2** to suppose, assume. *ʃifriḍ ʃinn ik-kalaam bitaaɛ-u ṣaḥḥ* suppose that what he says is true. *faraḍna ma-gaa-ʃ* let's suppose he doesn't come. ‖*wi-friḍ* so what! - vn *farḍ*; ava *faariḍ*; pva *mafruuḍ*.
فرض *farḍ* /n pl *furuuḍ*/ **1** duty, obligation. *ḥubb il-waṭan farḍ[a] ɛaleena* love for our country is our duty. **2** *[Isl]* obligatory ritual act (as, e.g., the five ritual prayers, giving of alms etc.). **3** assumption, supposition.
مفروض *mafruuḍ* or *ʃil-mafruuḍ* /invar/ **1** it is considered proper, the right and proper thing would be, as in *ʃil-bint[i] mafruuḍ ʃinnaha titgawwiz* a girl should get married. *mafruuḍ is-suʃaal da ma-yitqal-ʃ* that question

ought not to be asked. *ma-kan-f' mafruuḍ yiruuḥ* he shouldn't have gone. *ʔil-mafruuḍ illi yibtidi ḥaaga yxallaṣ-ha* one should finish what one begins. **2** it is assumed, the assumption is, as in *kaan mafruuḍ nikuun waṣalna maṣr' min saɛteen* we should have reached Cairo two hours ago. *ʔil-mafruuḍ ʔinnu yiigi l-lelaa-di* he's supposed to be coming tonight. *ʔil-mafruuḍ ʔinnu ɛayyaan bass' ʔuft-u fiʔ-ʔaariɛ* he's supposed to be sick, but I saw him in the street.

اتفرض *ʔitfaraḍ* /vi/ to be imposed. *ḍariiba tfaraḍit ɛala l-fallaḥiin* a tax was imposed on the peasants. - iva *mitfiriḍ*.

انفرض *ʔinfaraḍ* = *ʔitfaraḍ*. - iva *minfiriḍ*.

افترض *ʔiftaraḍ* /vt/ to suppose, assume. *ʔiftaraḍna ʔinnu miʃ gayy* we assumed he wasn't coming. - vn *ʔiftiraaḍ*; ava *miftiriḍ*.

ف ر ط

فرط *faraṭ (u)* **1** /vt/ **1a** to disjoin or break up into constituent parts. *faraṭit il-ɛuqd* she unstrung the necklace. **1b** to undo. *tiḥibb' tufruṭ faɛr-a-ha* she likes to let her hair hang loose. **1c** to scatter. *faraṭit il-hiduum ɛas-siriir* she flung the clothes all over the bed. ‖ *ʔafruṭ-ak* ≈ I'll break you into a million pieces! **2** /vi/ to become disjoined, break up. *kuuz id-dura lamma yinʃaf bi-yufruṭ* the ear of maize, when it dries, breaks up (into separate kernels). - vn *farṭ, faraṭaan*; ava *faariṭ*; pva *mafruuṭ*.

فرط *farṭ* **1** /adv/ (bought and sold) individually (usually of cigarettes). *b-afukk il-ɛilba w-ʔabiiɛ is-sagaayir farṭ* I undo the pack and sell the cigarettes one by one. **2** /adj invar/ loose, unpackaged. *duxxaan farṭ* loose tobacco. *ɛinab farṭ* grapes which have fallen off the bunches and are sold off cheaply.

فرط *firiṭ* /adj */ **1** excessive, extreme. *wilaad-u firṭiin fiṭ-ṭuul* his sons are exceedingly tall. **2** extravagant, wasteful. *ʔiid-u firṭa* he's an extravagant spender.

فراطة *furaaṭa* = *farṭ*. ‖*naas furaaṭa* riff-raff, rabble.

اتفرط *ʔitfaraṭ* /vi/ **1** to become disjoined, break up into component parts. *ʔiṣ-ṣuḥba tfaraṭit* the posy came apart. *ʃaddit fil-ɛuqd' qaam itfaraṭ minha* she pulled at the necklace and it broke scattering the beads. **2** passive of *faraṭ*. - ava/iva *mitfiriṭ*.

انفرط *ʔinfaraṭ* = *ʔitfaraṭ*. - ava/iva *minfiriṭ*.

فرّط *farraṭ* /vt/ to disjoin or break up (several items) into constituent parts. *bi-nfarraṭ id-dura* we strip the maize of its kernels. - vn *tafriiṭ*; ava *mifarraṭ*.

¶ *farraṭ fi-* to be negligent in keeping a hold on. *bi-yfarraṭ fi-faraf-u* he is careless with his integrity. *huwwa lissa gdiid wi-m-aqdar-ʃ afarraṭ fii* it's still new and I can't part with it.

اتفرّط *ʔitfarraṭ* /vi/ to be disjoined, be broken up into constituent parts (of several items). - iva *mitfarraṭ*.

¶ *ʔitfarraṭ fi-* (impersonal) passive of *farraṭ fi-*.

ف ر ط ح

فرطح *farṭaḥ* **1** /vt/ to flatten. *farṭaḥ-u min il-ginaab* flatten it at the sides. **2** /vi/ to become flat. - vn *farṭaḥa*; ava/pva *mifarṭaḥ*.

اتفرطح *ʔitfarṭaḥ* /vi/ **1** to be flattened. **2** to become flat. - vn *tifarṭiiḥ*; iva/ava *mitfarṭaḥ*.

ف ر ع

فرع *farɛ* /n pl *furuuɛ, ʔafruɛ, ʔufruɛ, furúɛa*↓/ **1a** branch, bough (of a tree). ‖*ɣurzit farɛ [needlew]* stem-stitch. **1b** branch (of the Nile). *farɛ' dumyaaṭ* the Damietta branch of the Nile. **1c** *[mus]* variant on a basic mode. *furuuɛ rast* the subsidiary modes based on the mode *rast*. **2** subdivision, branch (of a commercial establishment). *ʔil-bank' luu furuuɛ fi-kull' balad* the bank has branches in every town.

فرعى *farɛi* /adj */ branch, subsidiary. *ṭurɛa farɛiyya* subsidiary canal.

فرع *firiɛ* /adj */ tall, erect, well-grown.

أفرع *ʔafraɛ* /el/ more/most erect etc.

فارع *faariɛ* /adj */ tall, erect well-grown.

فرّع *farraɛ* /vi/ to branch, branch out. *ʔiʃ-ʃagara farraɛit ɛag-gineena wiʃ-ʃaariɛ* the tree (grew and) spread its branches over the garden and the street. - also *farɛan*. - vn *tafriiɛ*; ava *mifarraɛ*.

تفريعة *tafriiɛa* /n pl *-aat*/ branch, division. *tafriiɛit in-niil* branch of the Nile.

اتفرّع *ʔitfarraɛ* /vi/ to branch out, divide. *ʔin-niil bi-yitfarraɛ hina* the Nile divides here. - ava *mitfarraɛ*.

ف ر ع ن [1]

فرعون *faraɛoon, firɛoon* /n pl *faraɛna*/ **1** pharaoh. **2** tyrant. **3** giant, a mountain of a man.

فرعونى *faraɛooni, firɛooni* /adj/ pharaonic. *ʔasaar faraɛoniyya* relics of the pharaonic period.

فرعن *farɛan* [1] /vt/ to turn into a tyrant, make arrogant and wilful. *dalaɛ ʔumm-u lu farɛan-u* his mother's spoiling him made him into a little tyrant. *ʔil-qirfeen farɛanuu-hum* money made them think they could behave as they wanted. *ya faraɛoon ʔeef farɛan-ak*. - *qaal ma-ḥadd'-ʃ radd-i-ni [prov]* They said, 'Tyrant, what made you tyrannical?' He said, 'No one corrected me.' - vn *farɛana*; ava/iva *mifarɛan*.

اتفرعن *ʔitfarɛan* /vi/ to behave like a tyrant, behave wilfully and arrogantly. - vn *tifarɛiin*; ava *mitfarɛan*.

ف ر ع ن [2]

فرعن *farʕan*[2] /vi/ to flourish and spread (of a plant). - also *farraʕ*. - vn *farʕana*; ava *mifarʕan*.

ف ر غ

فرغ *firiɣ (a)* /vi/ **1** to become empty. *ʕif-fiwaal firiɣ* the sack emptied. *ʕil-baṭṭariyya firɣit* the battery has discharged. *qazaayiz farɣa* empty bottles. ‖*tuuta tuuta firɣit il-ḥadduuta* terminating phrase for a children's story ≈ (and) so the tale is done. - *firiɣ il-hizaar - ma baqa ʕilla g-gadd [prov]* ≈ the time for joking is over. **2** to become unoccupied, become at leisure. *ḥ-akallim-ak lamma ʕafraɣ mif-fuɣlaana di* I'll speak to you when I'm finished with this job. - vn *furuuɣ, faraɣaan*; ava *faariɣ*; pva *mafruuɣ*.

فروغ *furuuɣ* /vn/ ‖*bi-furuuɣ ṣabr* impatiently.

فروغيّه *furuɣiyya* /n/ emptiness. ‖*furuɣiyyit ʕeen* insatiable greed.

فارغ *faariɣ* **1** /ava/ ‖*ʕeen-u farɣa* he is insatiably greedy. **2** /adj/ void of meaning, inane, senseless. *kalaam faariɣ* senseless talk or behaviour, nonsense. ‖*ʕil-ḥikaaya kull-a-ha farɣa* the whole thing's totally unimportant.

فارغه *farɣa* /n pl *-aat*/ kerosene tank (of a primus stove).

فوارغ *fawaariɣ* /pl n/ empty bottles. *lamma tʕuuz tiftiri biira laazim tigiib il-fawaariɣ maʕaak* when you want to buy beer you must bring the empties with you.

مفروغ *mafruuɣ* /pva/ ‖*ʕamr[i] mafruuɣ minnu* (1) something virtually, or as good as, done. (2) a matter of complete agreement.

أفرغ *ʕafraɣ* /el/ more/most senseless, inane or meaningless.

فراغ *faraaɣ* /n/ **1** emptiness, space. *fii faraaɣ been sinaan-u* he's gap-toothed. **2** leisure, freedom from work. *waqt il-faraaɣ* free time.

فراغه *faraaɣa* /n/ **1** emptiness. ‖*faraaɣit ʕeen* insatiable greed. **2** /pl *-aat*/ empty space. *ʕimḍi fil-faraaɣa di* sign in this space. *ḥuṭṭ il-ʕarabiyya fil-faraaɣa hnaak* park the car in the space over there.

فرّغ *farraɣ* or *farraɣ* /vt/ **1a** to empty out (contents). *farraɣt il-filuus min geeb-i* I emptied the money out of my pocket. *farraɣ kimmiyyit ṭiina tanya* pour out another quantity of clay! **1b** to empty out the contents of *farraɣ il-bakar* he unwound the spools. *farraɣ il-musaddas fii* he emptied the gun into him. *tafriiɣ il-markib* the unloading of the ship. **2** to free, make unoccupied. *ḥ-afarraɣ nafs-i l-xidmit-hum* I'll devote myself to serving them. **3a** to transfer (contents, by copying). *farraɣ nimar iṭ-ṭalaba fi-kfuuf xaṣṣa* he transferred the students' marks to special lists. **3b** to transfer the contents of (by copying). *farraɣ-li f-firiiṭ* he copied the tape for me. **4** to hollow out, make a hollow in. *laazim tifarraɣ ḥawaleen kull' fatla* you must make a hollow around each seedling. *ṭuub mifarraɣ* hollow brick. – /vi/ **5** to discharge contents. *ʕil-musaddas farraɣ fi-wiff-u* the gun went off in his face. **6** to become hollow. *xuduud-u farraɣit* his cheeks became hollow. - vn *tafriiɣ*; ava/pva *mifarraɣ, mifarraɣ*.

تفريغ *tafriiɣ* /n/ *[med]* dilation and curettage (D and C).

تفريغه *tafriiɣa* /n/ concavity, hollow.

اتفرّغ *ʕitfarraɣ* or *ʕitfarraɣ* /vi/ **1a** to be or become emptied out (of contents). **1b** to be emptied (of a container). **2a** to be transferred (by copying, of contents). **2b** to be transferred (by having the contents copied). *ʕil-lista tfarraɣit fid-daftar* the list was transferred to the ledger. **3** to become hollow, be hollowed out. **4** to gain leisure time, disengage oneself (for a particular activity). *ʕil-minḥa xallit-ni ʕatfarraɣ lik-kitaaba* the grant left me free to write. - ava/iva *mitfarraɣ, mitfarraɣ*.

تفرّغ *tafarruɣ* /n pl *-aat*/ **1** (also *minḥit tafarruɣ*) grant, scholarship. **2** (also *badal tafarruɣ*) subsidy.

استفرغ *ʕistafraɣ, ʕistafraɣ* /vi/ to vomit. - vn *ʕistifraaɣ*; ava *mistafraɣ*.

ف ر ف ت

فرفت *farfit* /vt/ to break into tiny pieces, crumble. - also *fatfit*. - vn *farfata*; ava/pva *mifarfit*.

فرفوته *farfuuta* /n pl *farafiit*/ tiny piece, crumb. - also *fatfuuta*.

اتفرفت *ʕitfarfit* /vi/ to be broken into tiny pieces, be crumbled. - also *ʕitfatfit*. - vn *tifarfiit*; iva *mitfarfit*.

ف ر ف ر [1]

فرفر *farfar, farfir* /vi/ **1** to flutter the wings. **2** to shake oneself, squirm. **3** to be convulsed before dying (of an animal). – /vt/ **4** to gin (cotton). - vn *farfara*; ava/pva *mifarfar, mifarfir*.

اتفرفر *ʕitfarfar* /vi/ to be ginned (of cotton). - iva *mitfarfar*.

ف ر ف ر [2]

فرفر *firfir* /n pl *faraafir*/ revolver, handgun. - also *rifulfar*.

ف ر ف ش

فرفس *farfiʃ* **1** /vt/ to make happy, cheer up. *kaan ḥaziin ḥawilt afarfiʃ-u* he was depressed, so I tried to cheer

him up. **2** /vi/ to become happy or cheerful, enjoy oneself. *taɛaala nifrab wi-nfarfif il-lelaa-di* come, let's drink and be merry tonight. - vn *farfaʃa*; ava *mifarfif*.

اتفرفش *ʔitfarfif* /vi/ **1** to become happy, cheer up. **2** to be made happy. - vn *tifarfiif*; ava/iva *mitfarfif*.

ف ر ف ط

فرفط *farfaṭ* /vt/ to spread out or scatter. *farfaṭt' il-xaraz ɋuddaami ɛaʃaan ʔanaqqi k-kubaar* I spread the beads out in front of me so I could pick out the big ones. ‖*farfaṭ-i-lu snaan-u* I knocked his teeth out. - vn *farfaṭa*; ava/pva *mifarfaṭ*.

اتفرفط *ʔitfarfaṭ* /vi/ to be or become widely spread out, be or become scattered. *ʔil-birʃaam wiqiɛ min ʔiid-i wi-tfarfaṭ ɛal-ʔarḍ* the pills fell from my hand and scattered over the ground. - vn *tifarfiiṭ*; ava/iva *mitfarfaṭ*.

ف ر ق

فرق *faraq (i)* **1** /vi/ to differ, be different. *faxṣiyyit-u b-tifriq ɛan faxṣiyyit-i* his personality differs from mine. ‖*ma-tifriq-ʃ* it makes no difference. - *raagil ɛan raagil yifriq* there are men and then there are men! **2** /vt/ **2a** to separate. *ʔil-ħarb' faraqit-na ɛan baɛḍ* the war separated us. **2b** to make a parting in (hair). - vn *farq*; ava *faariq*; pva *mafruuq*.

فرق *farq* /n pl *firuuq, furuuq, firuqaat, furuqaat*/ **1** difference, variation. *ma-fii-ʃ farq* there's no difference. **2** balance. *badil-ni ɛala fanṭit-ak w-adfaɛ-lak il-farq* give me your bag in exchange and I'll pay the difference. **3a** break, divide, gap. *fii farq' waasiɛ been iṣ-ṣaffeen* there's a wide gap between the two rows. **3b** parting (in the hair).

فارق *faariq*[1] /n pl *fawaariq*/ = *farq*.

فرقة *firqa* /n pl *firaq*/ **1** (organized) group, troupe. *firqit tamsiil* an acting troupe. *firqit daggaliin* a band of swindlers. **2** team. *firqit koora* football team. **3** *[mil]* division (of an army). **4** *[mil]* training course (in the work of a particular unit). *xadt' firqa dfaaɛ madani* I took a course in civil defence.

فراق *firaaq* or *furaaq* /n/ separation, parting. *ʔil-firaaq ṣaɛb* parting is difficult. ‖*ʔahi leela w-firaq-ha ṣubħ [prov]* ≈ after the dark the dawn.

فاروقيّة *faruqiyya* /n/ *[obsol]* forage cap.

فريق *fariiq* /n/ **1** /pl *firaq*/ *[sport]* team. **2** /pl *furaqaaʔ*/ *[mil]* general.

اتفرق *ʔitfaraq* /vi/ **1** to separate, be separated. **2** to be parted (of hair). - ava/iva *mitfiriq*.

انفرق *ʔinfaraq* = *ʔitfaraq*. - ava/iva *minfiriq*.

فرّق *farraq* /vt/ **1** to cause to separate, break up. *ʔil-buliiṣ farraqu l-muẓahra* the police broke up the demonstration. **2** to distribute. *farraqna l-ʃakl[a] ɛal-ɣalaaba* we distributed the food among the poor. *farraq ik-kutʃiina* deal out the cards! — /vi/ **3** to bring about a separation. *ʔil-ʔayyaam farraqit benna* time separated us. **4** to make a distinction, differentiate. *ma-tiɛraf-ʃ' tfarraq benna* she can't tell us apart. - vn *tafriiq*; ava/pva *mifarraq*.

اتفرّق *ʔitfarraq* /vi/ to be made to separate or separate, be dispersed or disperse. *min ʃiddit iz-zaḥma tfarraqna* the crowd was so thick we were forced to split up. *baɛd il-ʔahl' ma maatu ʔitfarraqit il-ɛeela* after the parents died the family split up. - ava/iva *mitfarraq*.

فارق *faariq*[2] /vi/ to separate oneself from, depart from. ‖*(ruuḥ) fariq-na* get lost! - *ʔiʃ-ʃibbaak mifaariq* there is a gap between the window-frame and the wall. - vn *mufarqa, mifarqa*; ava *mifaariq*.

مفارقة *mufaaraqa* /n pl *-aat*/ absurdity. *ʔid-dunya malyaana mufaaraqaat* life is full of absurdities.

اتفارق *ʔitfaariq* /vi/ passive of *faariq*[2]. - iva *mitfaariq*.

افترق *ʔiftaraq* /vi/ **1** to differ. *ʔil-madrasteen bi-yiftirqu ktiir ɛan baɛḍ-u-hum* there's quite a difference between the two schools. **2** to part company. *ma-b-yiftirquu-ʃ ɛan baɛḍ' xaaliṣ* they're never out of each other's sight. - vn *ʔiftiraaq*; ava *miftiriq*.

ف ر ق ط

فرقاطة *furqaaṭa*[t] <It *fregata*> /n pl *-aat*/ frigate.

ف ر ق ع

فرقع *farqaɛ* **1** /vt/ **1a** to cause to burst, cause to explode. *farqaɛ ballont-i* he popped my balloon. ‖*farqaɛít-u* she blew the date with him, she stood him up. - *farqaɛít-u baɛḍ' ʔarbaɛ siniin ɣaraam* she broke with him after four years of passion. **1b** to cause to make an explosive sound. *farqaɛ ik-kurbaag* he cracked the whip. **2** /vi/ **2a** to burst, snap. *ʔil-ɛagala ħa-tfarqaɛ* the tyre is about to burst. *ʔil-ħabl' farqaɛ* the rope snapped. **2b** to make an explosive sound. *simiɛt il-farqaɛa btaaɛit ik-kurbaag* I heard the cracking of the whip. - vn *farqaɛa*; ava *mifarqaɛ*.

فرقعة *farqaɛa* /n pl *-aat, faraqiiɛ*/ explosion.

فرقع *furquɛ: furquɛ looz* type of black beetle which, when overturned, jumps with a cracking sound to right itself. *ɋayy' furquɛ looz* always jumping about.

فرقيعة *furqeeɛa* /n pl *-aat*/ = *farqaɛa*.

مفرقعات *mufarqaɛaat, mufarqaɛaat* /pl n/ explosives, fireworks.

اتفرقع *ʔitfarqaɛ* /vi/ passive of *farqaɛ*. - vn *tifarqiiɛ*; iva *mitfarqaɛ*.

ف ر ق ل ل

فرقلّة *farçilla* /n pl *-aat, faraçill, faraaçil*/ drover's whip. ‖*lisaan-u zayy il-farçilla* he has a vicious tongue.

ف ر ك

فرك *farak, farak (u, i)* /vt/ **1** to rub. *ʕittaawib wi-farak ʕenee* he yawned and rubbed his eyes. **2** to rub to bits, crumble. *ʕufruki l-ʕeef* crumble the bread. - vn *fark, firaaka*; ava *faarik*; pva *mafruuk*.

فركة *farka* /inst n, pl *-aat*/ a rubbing, a rub. ‖*farkit kaʕb* (a rubbing of the heel) a short distance, a stone's throw.

مفروكة *mafruuka* /n/ *[rur]* type of fine maize couscous, usually eaten with milk and sugar.

فراكة *furaaka* /n/ fragments of matter cleaned off a surface by rubbing. *furaakit ħalla* cooking-pot scourings.

فريك *firiik* /n/ green wheat which has been cut and roasted.

مفراك *mufraak* /n pl *mafaarik*/ wooden whisk twirled between the hands (used, especially, to break up cooked mallow) (see Pl.B, 6).

اتفرك *ʕitfarak, ʕitfarak* /vi/ **1** passive of *farak*. **2** to become crumbly. *tibissi d-diqiiq wis-samn^{i} maʕa baʕd^{i} l-ħadd^{i} ma yitfirik* you work the flour and clarified butter together until it becomes crumbly. - ava/iva *mitfirik*.

انفرك *ʕinfarak, ʕinfarak* = *ʕitfarak*. - ava/iva *minfirik*.

ف ر ك ش

فركش *farkiʃ* /vt/ to scatter, disperse. *nizil fiihum bi-qarb iʃ-ʃuum ʕaʃaan yifarkiʃ-hum* he went at them with a cudgel to disperse them. - vn *farkaʃa*; ava *mifarkiʃ*.

فركيشة *furkeeʃa* /n/ *[slang]* disarray, shambles.

اتفركش *ʕitfarkiʃ* /vi/ to be scattered, be dispersed. - vn *tifarkiiʃ*; iva *mitfarkiʃ*.

ف ر م [1]

فرم *faram (u)* /vt/ to mince, grind (e.g., meat). *laħma mafruuma* minced meat. - vn *farm*; ava *faarim*; pva *mafruum*.

مفرمة *maframa* /n pl *mafaarim*/ mincer, meat grinder.

اتفرم *ʕitfaram* /vi/ to be minced, be ground. - iva *mitfirim*.

انفرم *ʕinfaram* = *ʕitfaram*. - iva *minfirim*.

ف ر م [2]

فورمة *furma* <It *forma*> /n pl *-aat, furam*/ **1a** matrix, mould, pattern. **1b** *[print]* forme. **2** hair style. **3** physical condition, fitness. ‖*fil-furma* in (good) shape, fit.

فرمة *firma* <It *firma*> /n pl *-aat, firam*/ **1** decorative form or shape. **2** signature characterized by flourishes.

ف ر م ا ن

فرمان *faramaan* <T *ferman* from P> /n pl *-aat*/ **1** *[obsol]* firman. **2** *[joc]* pronouncement.

ف ر م س –

فرمسيلاّ *farmisilla* (also *fukulaata farmisilla*) <Fr *vermicelle*> /n/ chocolate vermicelli, chocolate strands (for cake decoration).

ف ر م ل

فرملة *farmala* /n pl *faraamil*/ brake.

فرملجى *farmalgi* /n pl *-yya*/ brakeman (on a train).

فرمل *farmil* /vi/ **1** to brake, apply the brakes. *yadoobak farmilt^{i} qabl^{i} m-ʕaxbaṭ fii* I only just managed to brake before I ran into it. – /vt/ **2** to apply the brake to. *ma-tfarmil-ʃ il-ʕarabiyya ʕaʃaan ʕarkin-haa-lak kiwayyis* don't leave the hand-brake on, so that I can park the car nicely for you. **3** to block, obstruct. ‖*ʕamal farmala [soccer]* to make a blocking play. - vn *farmala*; ava/pva *mifarmil*.

اتفرمل *ʕitfarmil* /vi/ passive of *farmil* 2 and 3. - iva *mitfarmil*.

ف ر م ن see ف ر م ا ن: *faramaan*

ف ر ن [1]

فرن *furn* /n pl *ʕafraan, firaan*/ **1a** oven (for an illustration of a traditional mud oven see Pl.C, 6). *makaroona fil-furn* baked macaroni. ‖*tiħbal fil-furn^{i} w-tiwlid figgurn [prov]* (she conceives in the oven and gives birth in the village square) ≈ your sins will find you out. **1b** kiln. **2** bakery. *furn^{i} baladi* a bakery making traditional types of bread. *furn afrangi* a bakery making western types of bread.

فرّان *farraan* /n */ baker.

ف ر ن [2] see ف ا ر: *firaan*

ف ر ن ج see also ء ف ر ن ج

فرنجة *farnaga* /vn/ aping of Westerners.

اتفرنج *ʕitfarnag* /vi/ to ape the Europeans, affect European manners and tastes. - vn *tafarnug*; ava *mitfarnag*.

متفرنج *mitfarnag* /adj */ Europeanized, Westernized.

ف ر ن د
فرندة *faranda, varanda* <It> /n pl *-aat*/ veranda. - also *baranda*.

ف ر ن س
فرنسا *faransa* /prop n/ France.
فرنسى *faransi, firinsi* **1** /adj */ French. **2** /n */ Frenchman.
فرنساوى *faransaawi* **1** /adj */ French. *naas faransawiyyiin* French people. *sitt' faransawiyya* a Frenchwoman. *farankaat faransaawi* French francs. ‖*muftaaḥ faransaawi* adjustable spanner, monkey wrench. **2** /n */ a Frenchman. **3** /n, no pl/ the French language.

ف ر ن ش
فرنشة *faranʃa* <perh Fr *frange*> /n pl *-aat*/ (decorative) fringe, braid.

ف ر ن ك
فرنك *firank, farank* <Fr> /n pl *-aat*/ franc. *firankaat siwisriyya* Swiss francs. ‖*nuṣṣ frank [obsol]* two piastres, a two-piastre coin.

ف ر ه د
فرهد *farhad* /vi/ to become totally exhausted. *farhadt' min kutr ız-zaḥma* I was completely worn out by all the crowds. - vn *farhada*; ava *mifarhad*.
اتفرهد *ʔitfarhad = farhad*. - vn *tifarhiid*; ava *mitfarhad*.

ف ر و
فرو *farw* /coll n/ fur(s), fleece(s).
فروة *farwa* /unit n, pl *faraawi*/ a fur, a fleece. *farwit xaruuf* a sheepskin. ‖*ʔabu farwa* chestnut(s). - *qaṭṭaɛ fi-farwit(-u)* to speak badly of (s.o.) behind his back, spread scandal about (s.o.).

ف ر و د
فرود *firwid* <Engl> **1** /n pl *farawda*/ *[soccer]* forward (player). **2** *farawda* /pl n/ minions.

ف ر و ز
فيروز *faruuz, faruuz* <P *fīroza*> /n/ turquoise.
فيروزى *faruuzi* /adj invar/ turquoise.

ف ر و ل [1]
فرول *farwil* **1** /vt/ to crumble (between the fingers). **2** /vi/ to become crumbly. *ʔil-fiṭiir mifarwil xaaliṣ* the pastry is very crumbly. - also *barwıl*. - vn *farwala*; ava/pva *mifarwil*.
اتفرول *ʔitfarwil* /vi/ to be crumbled or become crumbly. - also *ʔitbarwil*. - ava/iva *mitfarwil*.

ف ر و ل [2]
فراولة *firawla, farawla* <It *fragola*> /coll n/ **1** strawberries. **2** a drink of fresh strawberry juice.
فراولاية *firawlaaya, farawlaaya, farawlaaya* /unit n, pl *-aat*/ a strawberry.
فراوليّاية *firawliyyaaya, farawliyyaaya, farawliyyaaya = firawlaaya*.

ف ر ى
افترى *ʔiftara* /vi/ **1** to act unjustly. *bitaaɛ il-xuḍaar bi-yiftiri fil-ʔasɛaar* the greengrocer charges unfair prices. **2** to go to excess. *ʔiftareena fil-ʔakl' lamma kaan ḥa-ygi-lna tuxma* we stuffed ourselves with food till we almost got indigestion. **3** to make an unjust accusation. *ʔiftaru ɛala l-ɛaskari ʔinnu xad raʃwa* they unjustly accused the policeman of taking a bribe. - vn *ʔiftira, ʔiftira*; ava *miftiri*.
مفترى *muftàri* /adj */ **1** ruthless and unjust. **2** having insatiable appetite(s). *muftari fil-ʔakl* gluttonous.

ف ر ى ز
فريز *firiiz* <prob Fr> /n pl *-aat*/ frieze, skirt (of furniture).

ف ر ى ز ر
فريزر *firiizar, fireezar* <Engl> /n/ freezing compartment in a refrigerator.

ف ز ت see ف ز ى ت : *fiziita*

ف ز د ق
فستق *fuzduq* (also *fustuq*) /coll n/ pistachio(s).
فستقة *fuzduqa* (also *fustuqa*) /unit n, pl *-aat*/ a pistachio.
فستقاية *fuzduqaaya* (also *fustuqaaya*) *= fuzduqa*.
فستقى *fuzduqi* /adj/ pistachio-coloured, pale green.

ف ز ر [1]
فزر *fazar (u)* /vt/ to burst. *ɛagala mafzuura* a burst tyre. *fazart il-balloona* I popped the balloon. - vn *fazr, fazaraan*; ava *faazir*; pva *mafzuur*.
اتفزر *ʔitfazar* /vi/ to burst, be burst. *baṭn-a-ha kbiira tqul-f' ḥa-titfizir* her stomach's so big it looks as if it's about to burst. - ava/iva *mitfizir*.
فزّر *fazzar [1]* /vt/ to make a split in, burst open (the weave of s.th.). *libis jakittit-i w-fazzar-ha min ḍahr-a-ha* he put on my jacket and split it down the back. ‖*ḥ-afazzar-ak* I'll split your seams! I'll tear you apart!

-laḥm-a-ha mfazzar she has stretch marks on her body (as, e.g., after pregnancy). -vn *tafziir*; ava/pva *mifazzar*.
اتفزّر *ʔitfazzar* /vi/ to be split open (of weave). *waḥda mdamliga hdum-ha mitfazzara ʕaleeha* a woman so curvaceous that her clothes are bursting on her. *ʔik-kawitf[i] raaḥ mitfazzar* the tyre shredded. -iva *mitfazzar*.

ف ز ر ²
فزّورة *fazzuura* /n pl *fawaziir*/ riddle, conundrum.
فزّر *fazzar*²: *ḥazzar fazzar* make a guess!

ف ز ز
فزّ *fazz (i)* /vi/ to get up abruptly, spring up. *ʠuum fizz* on your feet! ‖*fizz[i] min hina* buzz off! -vn *fazz, fazazaan*; ava *faaziz*.
فزّة *fazza* /inst n, pl *-aat*/ a springing up, a jumping up.
مفزوز *mafzuuz* /adj */ restive, jumpy, nervous.
فزّز *fazziz* /vt/ **1** to kick (s.o.) out of his seat. *fazziz-u min hina* chuck him out of here! **2** to make restive or restless. *ʔil-ḥumma kaanit bi-tfazziz-u* the fever made him toss and turn. -vn *tafziiz*; ava/pva *mifazziz*.
اتفزّز *ʔitfazziz* /vi/ passive of *fazziz*. -iva *mitfazziz*.
استفزّ *ʔistafazz* /vt/ to provoke, incite. *kalaam-u stafazz-i-ni* what he said made me lose my temper. -vn *ʔistifzaaz*; ava/pva *mistafizz, mistifizz*.
استفزاز *ʔistifzaaz* /n pl *-aat*/ incitement, provocation.
استفزازى *ʔistifzaazi* /adj/ provocative.

ف ز ع
فزع *fazaʕ (a)* **1** /vt/ to frighten, startle. *ʂuwat-ha fazaʕ-na* her screams startled us. *ʠaamit min in-noom mafzuuʕa* she woke up with a start. **2** /vi/ to make a scary sound. *geet min wara w-fazaʕt[i] fii* I came up from behind and scared him. -vn *fazaʕ*; ava *faaziʕ*; pva *mafzuuʕ*.
فزعة *fazʕa* /inst n, pl *-aat*/ a fright.
اتفزع *ʔitfazaʕ* /vi/ to be given a fright, be startled. -iva *mitfiziʕ*.
انفزع *ʔinfazaʕ* = *ʔitfazaʕ*. -iva *minfiziʕ*.
اتفزّع *ʔitfazzaʕ* /vi/ **1** to gather one's strength (before striking s.o.). *ʔitfazzaʕt[i] w-ḍarabt-u ʠalam ʠafal ʕeen-u* I gathered all my strength and gave him a slap that closed his eye. **2** to feign an attack. -ava *mitfazzaʕ*.

ف ز ل ك
فزلك *fazlik* /vt/ *[joc]* to fuss over, go to pernickety lengths over. *ma-b-tinzil-f[i] mil-beet ʏeer lamma tkuun mifazlika roḥ-ha ʕal-ʔaaxir* she never leaves the house without having first dolled herself up to the nines. -vn *fazlaka*; ava *mifazlik*.
فذلكة *fazlaka* /n pl *-aat, fazaalik*/ **1** *[joc]* (short) comment. *ʕandi fazlaka ʠuṣayyara ʕan il-mawḍuuʕ* I have a few words to say on the subject. **2** fuss, ado. **3** palm-greasing, bribery.
اتفزلك *ʔitfazlik* /vi/ *[joc]* to act in a fussy or pernickety way. -ava *mitfazlik*.

ف ز ل ن
فازلين *fazliin, vazliin↑* <trade name *Vaseline*> /n/ **1** petroleum jelly. **2** hair cream, brilliantine.
فزلن *fazlin* /vt/ to apply *fazliin* to. -vn *fazlana, vazlana*; ava/pva *mifazlin, mivazlin*.
اتفزلن *ʔitfazlin* /vi/ passive of *fazlin*. -vn *tifazliin*; ava/pva *mitfazlin*.

ف ز ى ت
فزيتة *fiziita* <It *visita*> /n/ *[med]* consultation fee.

ف س ت ا ن
فستان *fustaan* <prob T *fiston* from It; cf Engl *fustian*> /n pl *fasatiin*/ woman's dress, frock.

ف س ت ق see ف ز د ق: *fustuq, fustuqa, fustuqaaya*

ف س ت و ن
فستون *fistoon* <Fr *feston*> /n/ *[needlew]* scallop. *ʏurzit fistoon* buttonhole-stitch.
فستونة *fistoona* = *fistoon*.

ف س ح
فسح *fasaḥ (a)* /vt/ to clear, make room in. *ʔifsaḥ iṭ-ṭariiʠ* make way! ‖*fasaḥnaa-lu magaal ʕafaan yifarik-na fir-riḥla* we gave him the opportunity of joining us on the trip. -vn *fasaḥaan*; ava *faasiḥ*; pva *mafsuuḥ*.
فسحة *fusḥa* /n pl *fusaḥ*/ **1a** stroll, outing. **1b** interval between classes, recess. **2** *[children]* **2a** act of excreting. **2b** excrement.
فسحة *fasaḥa* /n pl *-aat*/ **1** hallway, vestibule. **2** open area, open space.
أفسح *ʔafsaḥ[1]* /el/ more/most spacious.
اتفسح *ʔitfasaḥ* /vi/ to be cleared, be made spacious. -iva *mitfisiḥ*.
انفسح *ʔinfasaḥ* = *ʔitfasaḥ*. -vn *ʔinfisaaḥ*; iva *minfisiḥ*.
فسّح *fassaḥ* **1** /vt/ **1a** to take for a stroll, take for an outing. *fassaḥ-ni fil-haram* he took me out to the Pyramids. **1b** *[criminal slang]* to take for a walk, rub out. **2** /vi/ to make room, give room. *ʔitfaʕlaʠt[a] ʕas-sillim*

ɛaʃaan ma-fassaḫu-lii-ʃ guwwa l-ʃutubiis I hung on to the steps because they wouldn't make room for me inside the bus. - vn *tafsiiḫ*; ava *mifassaḫ*.

اتفسّح ʃitfassaḫ /vi/ **1** to stroll around, go for a stroll, go on an outing. ʃitfassaḫna ɛal-kurniif we went for a stroll along the river road. **2** to relieve oneself, ease nature. ʃil-ɛayyil itfassaḫ ɛala nafs-u the child soiled himself. - ava *mitfassaḫ*.

أفسح ʃafsaḫ[2] = *fasaḫ*. - vn *ʃifsaaḫ*; ava *mufsiḫ*.

ف س خ [1]

فسخ *fasax, fisix (a)* /vt/ **1** to sunder, disjoin. *fasax if-fatla miṭ-ṭiin* he pulled the seedling out of the soil. *ʃifsax riglee-k* open your legs! **2** *[leg]* to declare (a contract) invalid. ‖*fasaxit xuṭubit-ha* she broke off her engagement. - vn *fasx, fasaxaan*; ava *faasix*; pva *mafsuux*.

انفسخ ʃitfasax /vi/ **1** to be sundered, be disjoined. **2** *[leg]* to be declared invalid. - iva *mitfisix*.

انفسخ ʃinfasax = ʃitfasax. - iva *minfisix*.

فسّخ *fassax*[1] /vt/ to tear apart. ʃafassax-ak I'll tear you apart! *bi-ngiib il-ʃanfaar wi-nxallii-hum yifassaxu ʃ-ʃatl* we bring the labourers and have them break up the (bundles of) seedlings. - vn *tafsiix*; ava/pva *mifassax*.

اتفسّخ ʃitfassax[1] /vi/ to be torn apart. - ava/iva *mitfassax*.

ف س خ [2]

فسيخ *fisiix* /coll n/ salt-cured fish, especially grey mullet. ‖*yiɛmil min il-fisiix ʃarbaat [prov]* ≈ he makes silk purses out of sows' ears.

فسيخة *fisiixa* /unit n, pl *-aat*/ a salt-cured fish. ‖*naam zayy il-fisiixa* he slept like a log.

فسخاني *fasaxaani* /n pl *-yya*/ maker and seller of salt-cured fish.

فسّخ *fassax*[2] /vt/ to salt-cure (fish). - vn *tafsiix*; ava/pva *mifassax*.

اتفسّخ ʃitfassax[2] /vi/ to be salt-cured (of fish). - iva *mitfassax*.

[3] ف س خ see ف س و خ : *fasuux, fasuuxa*

ف س د

فسد *fisid (a)* /vi/ **1** to become corrupt. ʃaxlaaq-u fisdit his morals became corrupt. **2** to go off, spoil. ʃil-laḥma fisdit the meat went bad. - vn *fasaad, fasadaan*; ava *fasdaan, faasid*.

فسد *fasad (i)* /vt/ **1** to corrupt. ʃif-ʃubbaan tifsid-ha l-filuus ik-kitiir too much money corrupts the young. ʃin-naas fasaad in-naas *[prov]* nothing corrupts people like people. **2** to put out of order, ruin. *miin fasad ir-radyu* who put the radio out of order? **3** to spoil, cause to go off. ʃil-ḥarr' fasad il-ʃakl the heat spoiled the food. - vn *fasaad*; ava *faasid*; pva *mafsuud*.

فساد *fasaad* /n/ **1** rottenness, decay. **2** decadence. **3** corruption, immorality.

فسدان *fasdaan* /adj */ **1** morally corrupted. **2** rotten, bad, spoiled, decayed. **3** out of order.

أفسد ʃafsad[1] /el/ more/most spoiled, corrupted etc.

مفسدة *mafsada* /n pl *mafaasid*/ cause of corruption, source of evil. *kutr il-fuluus mafsada liʃ-ʃubbaan* too much money corrupts the young.

أفسد ʃafsad[2] = *fasad*. - vn *ʃifsaad*; ava *mufsid*.

ف س ر

فسّر *fassar* /vt/ **1** to expound, explain in detail. *tafsiir il-qurʃaan* the exegesis of the Koran. *fassar (fi-wiʃʃ-)* to detail misfortune or possible misfortune (to s.o.'s face) thus tempting providence and jeopardizing the other's plans. **2a** to interpret (dreams). **2b** to confirm (a dream vision) in reality. **3** to show details (of a picture). ʃiṣ-ṣuura mfassara wiʃʃ-ik xaaliṣ the photo shows your face very clearly. ‖*wiʃʃ-a-ha mfassar* she has clear features. - vn *tafsiir*; ava/pva *mifassar*.

تفسير *tafsiir* /n pl *-aat, tafasiir*/ **1** explanation. **2** commentary, exegetic work.

اتفسّر ʃitfassar /vi/ passive of *fassar*. - iva *mitfassar*.

استفسر ʃistafsar **1** /vi/ to inquire. ʃil-ʃaḫsan tistafsar minnu you'd better inquire with him. **2** /vt/ to ask, consult. *ruuḥ istafsar-u ɛan il-ɋaḍiyya* go and ask him about the case. - vn *ʃistifsaar*; ava *mistafsar*.

استفسر ʃistifsaar /n pl *-aat*/ inquiry.

ف س س

فسّ *fiss* /onom/ sound of air escaping, hiss.

فسّ *fass (i)* **1** /vi/ to leak air or gas. ʃil-kåwitf' raaḥ faasis the air hissed out of the tyre. **2** /vt/ to let air or gas out of (a tyre, tank etc.). *fiss-a-ha ʃwayya ɛaʃaan tiɋallil iḍ-ḍaṿṭ* let a little air out of it to reduce the pressure. - vn *fasasaan*; ava *faasis*; pva *mafsuus*.

ف س ف ا ت

فوسفات *fusfaat* <Fr> /coll n/ phosphate(s).

ف س ف س

فسفس *fasfis* /vi/ to erupt (of the skin), break out in pimples. - vn *fasfasa*; ava *mifasfis*.

فسفوسة *fasfuusa* /n pl *fasafiis*/ skin eruption, pimple. *fasfuusa sooda* blackhead.

فسافيسي *fasafiisi* /adj invar/ unstable, capricious,

guided by whim. *ma-yibqaa-ſ ɛaql-ak fasafiisi* don't make a fool of youself!

ف س ف و ر

فسفور *fusfuur, fusfoor* <Fr *phosphore*> /n/ phosphorus.

فسفوري *fusfuuri* /adj/ phosphorous, phosphoric.

ف س ق [1]

فسق *fasaqˀ, fasaq (a)* /vi/ **1** to indulge in licentiousness. **2** to commit adultery, fornicate. *fasaq fiiha* he fornicated with her. - vn *fisq, fisq*; ava *faasiq, faasiq*.

فاسق *faasiq, faasiq* /n * and pl *fussaaq*/ moral offender, specifically an adulterer.

أفسق *ʔafsaq* /el/ more/most sinful, licentious etc.

اتفسق *ʔitfasaq* /vi/ (impersonal) passive of *fasaq*. *fi-ʔayyaam il-ħuruub yaama byuut fariifa b-yitfisiq fiiha* in times of war, many an honourable family becomes the victim of rape and licentiousness. - iva *mitfisiq*.

ف س ق [2]

فسقيّة *fasqiyya* /n pl *-aat, fasaaqi*/ fountain.

ف س ل

فسل *fasl* /adj invar/ asinine, silly (of a person).

أفسل *ʔafsal* /el/ more/most asinine or silly.

فسالة *fasaala* /n/ pettiness.

فسيلة *fasiila* /n pl *fasaayil*/ palm shoot (growing out from the base of the trunk).

ف س و خ

فسوخ *fasuux* /coll n/ type of black resin, used for burning as incense and for sticking charms against the evil eye onto a baby's head.

فسوخة *fasuuxa* /unit n, pl *-aat*/ a piece of *fasuux*.

ف س ي

فسى *fisi (i)* /vi/ **1** to leak air or gas (of, e.g., a tyre). **2** to break wind silently. - vn *fisa*; ava *faasi*.

فسى *fasa (i)* /vt/ to disrupt, throw into disorder. *ʔawwil ma daxal fil-liɛba fasaa-ha* as soon as he joined in the game he made a shambles of it. *fiiha l-afsii-ha [children]* let me play or I'll ruin your game! - vn *fasayaan*; ava *faasi*; pva *mafsi*.

فسى *fasya* /n pl *-aat*/ noiseless fart.

فسّى *fassa* **1** /vt/ to leak air or gas out of (e.g., a tyre, tank). **2** /vi/ **2a** to leak air or gas (of, e.g., a tyre). **2b** to break wind silently. - vn *tafsiyya*; ava/pva *mifassi*.

اتفسّى *ʔitfassa* /vi/ passive of *fassa* 1. - iva *mitfassi*.

ف ش خ

فشخ *faſax (a)* /vt/ *[coarse]* to spread open, open wide. *faſax riglee* he spread his legs. ‖*ma-tiffax-ſ[i] buqq-ak [abus]* shut your gob! (to one laughing inappropriately). - vn *faſx*; ava *faafix*; pva *maffuux*.

فشخة *faſxa* /n pl *-aat*/ **1** instance noun of *faſx*. **2** *[deris]* boast.

اتفشخ *ʔitfaſax* /vi/ **1** *[coarse]* to spread open, be spread open. **2** *[abus]* to boast, brag. - ava/iva *mitfifix*.

انفشخ *ʔinfaſax* = *ʔitfaſax*. - ava/iva *minfifix*.

فشّخ *faſſax* **1** /vt/ to spread open, open wide. **2** /vi/ to cleave gradually. *ʔil-ħeeṭa faſſaxit* the wall has developed wide cracks. - vn *taffiix*; ava *mifaſſax*.

ف ش خ ر

فشخر *faſxar* /vi/ *[abus]* to go to expense for the sake of appearances, squander money ostentatiously. - vn *faſxara*; ava *mifaſxar*.

اتفشخر *ʔitfaſxar* = *faſxar*. - ava *mitfaſxar*.

ف ش ر [1]

فشر *faſar[1] (a)* /vi/ to boast, brag, talk big. - vn *faſr*; ava *faafir*.

فشرة *faſra* /n pl *-aat*/ a tall story.

فشر *faſar[2]* **1** /interj/ nonsense! impossible! **2** /n in constr/ (that which) makes a nonsense of .... *laha ɛiima faſar il-laħma* it really beats meat for value. *dukkaan faſar maħall[i] ʔalf[i] ɛanf* a shop to put an emporium to shame.

فشّار *faſſaar* /n */ braggart, big talker.

ف ش ر [2]

فشار *fiſaar, fuſaar* /n/ popcorn.

فشّر *faſſar* **1** /vt/ to make (especially corn) pop. *dura mfaſſar* popcorn. **2** /vi/ to pop (especially of corn). - vn *taffiir*; ava/pva *mifaſſar*.

اتفشّر *ʔitfaſſar* /vi/ passive of *faſſar*. - iva *mitfaſſar*.

ف ش ش [1]

فشّ *faſſ (i)* /vt/ **1** to deflate. *faſſ il-ɛagalaˌ* he let the air out of the tyre. ‖*faſſ[i] ɤill-u* (or *ɤaliil-u*) to vent one's anger, as in *faſſit ɤill-a-ha fiyya* she vented her anger on me. **2** to break, smash. *fiſſ il-ħagar da* break this stone. — /vi/ **3** to deflate, go down. *ʔil-balloona faſſit* the air went out of the balloon. *ʔil-waram faſſ* the swelling subsided. - vn *faſaſaan*; ava *faaſif*; pva *maffuuf*.

فشّ *fiſſ: ṭuzz[i] fiſſ* see *ṭuzz*.

فشوش *faſuuf* /adv/ in vain, to no avail. *ṭiliɛ faſuuf* or *raaħ (ɛala) faſuuf* to come to nothing, prove useless or fruitless.

مفشّ *mifaff* /adj invar/ *[slang]* given to empty talk, full of hot air.
اتفشّ *ʔitfaff* /vi/ **1** to be deflated. **2** to be smashed. - iva *mitfaff*.
انفشّ *ʔinfaff* = *ʔitfaff*. - iva *minfaff*.
فشّش *faffif* /vt/ **1** to deflate. **2** to smash, shatter. - also *faffif*. - vn *taffiif*; ava/pva *mifaffif*.
اتفشّش *ʔitfaffif* /vi/ **1** to be deflated. **2** to be smashed. - iva *mitfaffif*.

ف ش ش 2
فشّة *fiffa* **1** /coll n/ lung(s), light(s). **2** /unit n, pl *-aat, fifaf*/ a lung. ‖*fiffit-u ɛayma [deris]* (1) he loves to laugh, he's a jolly soul. (2) he is a braggart.

ف ش ف ش
فشفش *faffif* /vt/ to crush, break into pieces. *faat ɛalee il-ɋaṭr' faffif dimaaɣ-u* the train ran over him and crushed his head. - also *faffif*. - vn *faffafa*; ava/pva *mifaffif*.
اتفشفش *ʔitfaffif* /vi/ to be crushed, be broken in pieces. - vn *tifaffiif*; iva *mitfaffif*.

ف ش ق
فشق *faʃaq (i)* /vi/ to take a long step. - vn *faʃq, faʃaqaan*; ava *faafiq*.
فشقة *faʃqa* /n pl *-aat*/ **1** wide step, stride. *liɛbit il-faʃqa* a children's game in which the contestants try to accomplish the longest step possible. **2** distance traversed in a stride.
فشّق *faffaq* /vi/ **1** to walk with a waddling gait. **2** to straddle the legs. - vn *taffiiq*; ava *mifaffaq*.
اتفشّق *ʔitfaffaq* = *faffaq*. - ava *mitfaffaq*.

ف ش ك ل
فشكل *faʃkil* /vt/ **1** to make (s.th.) go wrong, cause to fail. *ɦawlu yfaʃkilu g-gawaaza* they tried to break up the marriage. **2** to sap the energy of, debilitate. *ʔil-bard' faʃkil-ni* the cold made me feel rotten. — /vi/ **3** to go wrong, fail. - vn *faʃkala*; ava/pva *mifaʃkil*.
اتفشكل *ʔitfaʃkil* /vi/ **1** passive of *faʃkil* 1 and 2. **2** = *faʃkil* 3. - vn *tifaʃkiil*; ava/pva *mitfaʃkil*.

ف ش ل 1
فشل *faʃal*[1], *fiʃil (a)* /vi/ to fail. *ʔilli b-yiffal fil-imtiɦaan bi-yɛiid is-sana* whoever fails the examination repeats the year. - vn *faʃal*; ava *faaʃil*.
فشل *faʃal*[2] /n/ failure, flop.
فاشل *faaʃil* /adj */ unsuccessful. *gawaaz bil-ɛafya maɛnaa gawaaz faaʃil* a forced marriage means an unsuccessful marriage.
أفشل *ʔaffal* /el/ more/most unsuccessful.

ف ش ل 2
فشل *fiʃl* /coll n/ dung (of beasts of burden).
فشلة *fiʃla* /unit n, pl *-aat*/ a piece of dung, a dropping.
فشلاية *fiʃlaaya* = *fiʃla*.
فشّل *faʃʃil* /vi/ to drop dung (especially of beasts of burden). ‖*kaanit bi-tirdaɦ lina wi-tfaʃʃil fitiima zayy iṭ-ṭuub* she showered us with abusive language. - vn *taffiil*; ava *mifaʃʃil*.

ف ش ل لِ
فشلِ *fiʃill* /n pl *-aat*/ *[deris]* fatso, fatty. *ya ffiill* hey fatty!
فشلّة *fiʃilla* = *fiʃill*.

ف ش ن ك
فشنك *fiʃink* <prob T *fiṣek*> /adj invar/ blank (of cartridges). ‖*ṭiliɛ fiʃink* it came to nothing. - *raagil fiʃink* a nobody, a wash-out, a failure.

ف ش و see **ف ش ى** : *faʃw*

ف ش ى
فشى *faʃa (i)* /vt/ to divulge, reveal. *gaabu sawwaaq ma-yiffii-ʃ il-ʔasraar* they got a driver who is discreet. - vn *faʃy, faʃayaan, faʃw*; ava *faaʃi*; pva *maffi*.
اتفشى *ʔitfaʃa* /vi/ to be divulged, be revealed, be betrayed (especially of secrets). - iva *mitfiʃi*.
أفشى *ʔaffa* = *faʃa*. - vn *ʔiffaaʔ*; ava *miffi, muffi*.
مفتشى *miftiʃi: bil-miftiʃi* bluntly, in plain words.

ف ص ا د
فصادة *faṣaada: ʔabu faṣaada [zool]* wagtail. ‖*ɛaamil zayy" ʔabu faṣaada* he's acting like a buffoon.

ف ص ح 1
فصح *fiṣiɦ* /adj * and pl *fuṣaɦa*/ = *faṣiiɦ*.
فصاحة *faṣaaɦa* /n/ eloquence.
فصيح *faṣiiɦ* /adj pl *fuṣaɦa*/ eloquent. ‖*bil-ɛarabi l-faṣiiɦ* (1) in literary Arabic. (2) in plain Arabic, in plain speech. - *ʔid-diik il-faṣiiɦ min il-beeḍa yṣiiɦ [prov]* ≈ talent shows itself early.
أفصح *ʔafṣaɦ*[1] /el/ more/most eloquent.
الفصحى *ʔil-fuṣɦa* /n/ the literary Arabic language.
أفصح *ʔafṣaɦ*[2]: *ʔafṣaɦ ɛan*↑ to give expression to. *ʔafṣaɦ ɛan illi fi-nafs-u* he came out with what was on his mind. - vn *ʔifṣaaɦ*; ava *mufṣiɦ*.

ف ص ح [2]
فصح *fiṣḥ: ɛiid il-fiṣḥ [Chr]* Easter.

ف ص د [1]
فصد *faṣad (u)* /vt/ to draw (blood). *faṣd id-damm[i] mil-ɛiruuq yinazzil iḍ-ḍaɣṭ* bloodletting lowers blood pressure. - vn *faṣd, fiṣaada, faṣadaan*; ava *faaṣid*; pva *mafṣuud*.
اتفصد *ʔitfaṣad* /vi/ passive of *faṣad*. - iva *mitfiṣid*.

ف ص د [2] see ف ص ا د : *faṣaada*

ف ص ص
فصّ *faṣṣ* /n pl *fuṣuuṣ*/ **1** segment, detachable piece (of a fruit or the like). *faṣṣ[i] burtuqaan* a segment of orange. *faṣṣ[i] toom* a clove of garlic. *faṣṣ[i] malḥ* a crystal of coarse salt. ‖*faṣṣ[i] malḥ[i] w-daab* ≈ he vanished into thin air. **2** pinch (of hashish, opium etc.). **3** gemstone. **4** pastern joint (of a horse, cow etc.).
فصّص *faṣṣaṣ* /vt/ **1** to divide into segments. ‖*faṣṣaṣ bisilla* to shell peas. **2** to dissect, analyse (a subject). - vn *tafṣiiṣ*; ava *mifaṣṣaṣ*.
اتفصّص *ʔitfaṣṣaṣ* /vi/ **1** to be divided into segments. **2** to be dissected, be analysed. - iva *mitfaṣṣaṣ*.

ف ص ل
فصل *faṣal (i)* /vt/ **1** to separate, detach. *bi-yifṣilu r-raas qabl[i] ma yusluxu g-gism* they detach the head before flaying the body. *ʔit-tirmustaat bi-yifṣil it-tayyaar lamma s-saxxaan yisxan qawi* the thermostat disconnects the current when the heater gets too hot. ‖*faṣl[i] quwwaat [mil]* disengagement of forces. **2** to expel, sack. *faṣaluu mik-kulliyya* they expelled him from the faculty. *ʔiɛtibir nafs-ak mafṣuul min bukra* consider yourself fired as from tomorrow. — /vi/ **3** to separate, become detached. *ʔil-lazq[i] b-yifṣil lamma yiqdam* the adhesive tape comes off when it gets old. **4** to act as a divide. *ʔil-qaṭuuɛ bi-yifṣil been il-ɛanaabir wil-mutoor* the bulkhead serves to separate the holds from the engine. **5a** to decide, be decisive. *raʔy il-qaaḍi ḥuwwa lli faaṣil fil-qaḍiyya* it's the judge's opinion which is decisive in the case. **5b** to decide, arrive at a decision. *kifaaya kalaam laazim tifṣil kida ʔaw kida* that's enough talk, you must decide one way or the other. **6** to name a price. *da b-kaam.* - *ʔifṣil inta* 'How much is that?' 'You name your price.' - vn *faṣl, faṣalaan*; ava *faaṣil*; pva *mafṣuul*.
فصل *faṣl* /n pl *fuṣuul*/ **1a** classroom. **1b** class. **2a** act (of a play). **2b** chapter, section (of a book). **3** season (of the year). **4** trick. *ɛamal fiina faṣl* he played a trick on us.
فصلة *faṣla[1]* /inst n, pl *-aat*/ a separation, a division, an expulsion.
فاصل *faaṣil[1]* /n pl *fawaaṣil*/ **1** partition, divide. *ɛamalna faaṣil been ig-ginenteen* we made a partition between the two gardens. ‖*faaṣil musiiqi* musical interlude. **2** *[anat]* meniscus. **3** section, defined part. *faaṣil min ḥayaat-i* a chapter from my life.
فاصلة *faṣla[2]* /n pl *-aat*/ comma.
فصيلة *faṣiila* /n pl *faṣaayil*/ **1** type, kind, species. *faṣiilit damm* blood group. **2** *[bot, zool]* family. **3** *[mil]* platoon.
مفصل *mafṣal* /n pl *mafaaṣil*/ joint (of the body).
مفصلي *mafṣali* /adj/ pertaining to the joints (of the body). ‖*rumatizm[i] mafṣali* rheumatoid arthritis.
اتفصل *ʔitfaṣal* /vi/ **1** to be or become detached. *bi-yiṣvar wi-byitfiṣil* it shrinks and separates. **2** to be cut off, be disconnected. *ʔik-kahraba tfaṣalit* the electricity was disconnected. **3** to be expelled, be sacked. *ʔitfaṣal min il-firqa* he was expelled from the team. **4** (impersonal) passive of *faṣal* 4, 5 and 6. - ava/iva *mitfiṣil*.
انفصل *ʔinfaṣal* = *ʔitfaṣal*. - vn *ʔinfiṣaal*; iva *minfiṣil*.
انفصال *ʔinfiṣaal* /n/ *[path]* detachment. *ʔinfiṣaal fiʃ-ʃabakiyya* detachment of the retina.

فصّل *faṣṣal* /vt/ **1** to cut and tailor to measure. *naaxud il-qumaaʃ nifaṣṣal-u ɛal-batroon* we take the cloth and cut it to the pattern. *ɛayz-ak tifaṣṣal-li jakitta* I want you to make me a jacket. **2** to have tailored. *faṣṣalt il-banṭaloon da ɛand[i] miin* where did you have those trousers made? **3** to expound, explain in detail. *faṣṣal-li l-mawduuɛ* he gave me a detailed account of the matter. - vn *tafṣiil*; ava/pva *mifaṣṣal*.
تفصيل *tafṣiil* **1** /vn/ ‖*bit-tafṣiil* in detail. **2** /adj invar/ made-to-measure.
تفصيلة *tafṣiila* /n pl *-aat, tafaṣiil*/ **1** cut (of a garment). *badla tafṣiila ʔamrikaani* an American-style suit. **2** detail. *tafṣilaat il-mawduuɛ* the details of the subject.
تفصيلي *tafṣiili* /adj/ detailed. *waṣf[i] tafṣiili* a detailed description.
مفصّل *mifaṣṣal* /pva/ ‖*mifaṣṣal ɛala* perfectly fitted to, made for, as in *ʔif-fuvlaana di mfaṣṣala ɛalayya* this job suits me to a T.
مفصّلة *mifaṣṣala* /n pl *-aat*/ hinge.
اتفصّل *ʔitfaṣṣal* /vi/ to be cut and tailored to measure. - iva *mitfaṣṣal*.
متفصّل *mitfaṣṣal* /iva/ ‖*mitfaṣṣal ɛala* perfectly fitted to, as in *ʔij-jakitta mitfaṣṣala ɛalee* the jacket fits him perfectly.

فاصل *faaṣil*[2] **1** /vi/ to bargain, haggle. *faṣilna fis-siʕr* we bargained over the price. **2** /vt/ to bargain with, haggle with. *faṣilt it-taagir* I haggled with the dealer. - vn *fiṣaal, mifaṣla, mufaṣla*; ava *mifaaṣil*.

فصال *fiṣaal* /n/ bargaining. *ma-ʕagab-naa-ʃ fiṣaal-u* we didn't like the way he bargained. *ma-ʕanduu-ʃ fiṣaal* he charges fixed prices.

اتفاصل *ʔitfaaṣil* /vi/ **1** to bargain with one another. **2** (impersonal) passive of *faaṣil*[2] 1. *ʔir-ragil-da ma-yitfaṣil-ʃ' mʕaa* this man cannot be bargained with. - ava/iva *mitfaaṣil*.

ف ص ل ى

فاصوليا *faṣulya* <perh T *fasulya* from Gr> /coll n/ haricot bean(s). *faṣulya beeḍa* dried beans. *faṣulya xaḍra* green beans, French beans.

ف ص م

انفصام *ʔinfiṣaam*↑ /n/ splitting. *ʔinfiṣaam ʃaxṣiyya [path]* schizophrenia.

ف ض ح

فضح *faḍaḥ (a, i)* /vt/ to subject to scandal, disgrace. *ma-tiddi-luu-ʃ ʕirʃ' f-ʔaaxir il-ʕarḍ' yifḍaḥ-ak* if you don't give him a piastre at the end of the show, he'll make you a public spectacle. || *ʔallaah yifḍiḥ-ak* ≈ God damn you! - *ʔallaah la yifḍiḥ-lak wiliyya [beggars]* ≈ may God protect the reputation of your womenfolk! - vn *faḍḥ*; ava *faaḍiḥ*; pva *mafḍuuḥ*.

فضحة *faḍḥa* /inst n/ a scandal, a public disgrace.

فاضح *faaḍiḥ* /adj/ scandalous, indecent. *fiʕl' faaḍiḥ [leg]* indecent act (e.g., indecent exposure, streaking etc.).

مفضوح *mafḍuuḥ* /n * and pl *mafaḍiiḥ*/ moral reprobate. ||*ʃuuf il-mafḍuuḥa bint il-mafaḍiiḥ* ≈ just look at the shameless slut!

فضحي *fuḍaḥi* /adj * and pl -*yya*/ scandal-mongering, mud-slinging.

أفضح *ʔafḍaḥ* /el/ more/most disgraceful, scandalous etc.

فضيحة *fiḍiiḥa* /n pl *faḍaayiḥ*/ scandal, public disgrace. *ma-rḍit-ʃ' ʔatkallim ʕaʃaan m-aʕmil-ʃ' fḍiiḥa fiʃ-ʃaariʕ* I kept quiet, so as not to cause a scene in the street. *ya-di-l-fiḍiiḥa* how shocking! ||*ya fḍiḥt-i [trad soc]* ≈ God forbid! (an expression of indignation or disbelief, used by women on hearing malicious gossip).

فضايحي *faḍayḥi* /adj * and pl -*yya*/ **1** scandalous. **2** scandal-mongering, mud-slinging.

اتفضح *ʔitfaḍaḥ* /vi/ to be subjected to scandal. - iva *mitfiḍiḥ*.

انفضح *ʔinfaḍaḥ* = *ʔitfaḍaḥ*. - iva *minfiḍiḥ*.

ف ض ض [1]

فضّ *faḍḍ (u)* /vt/ **1** to put an end to, have done with. *ga l-buliis faḍḍ il-xinaaʕa* the police came and broke up the fight. **2** to rid (o.s.). *fuḍḍ-i-na min di s-siira* let's drop the subject! *fuḍḍ-ak mik-kalaam* quit gabbing! ||*fuḍḍ-ak baʕa* have done! enough! **3** to break (a seal). ||*faḍḍ' bakarit-ha* he deflowered her. - vn *faḍaḍaan, faḍḍ*; ava *faaḍiḍ*; pva *mafḍuuḍ*.

انفضّ *ʔinfaḍḍ* /vi/ passive of *faḍḍ*. - iva *minfaḍḍ*.

اتفضّ *ʔitfaḍḍ* = *ʔinfaḍḍ*. - iva *mitfaḍḍ*.

ف ض ض [2]

فضّة *faḍḍa*[1] /n/ **1** silver. ||*filuus faḍḍa* coins (in contrast with paper money). **2** *[obsol]* para, one fortieth of a piastre.

فضّي *faḍḍi* /adj/ **1** made of silver. *ʕumla faḍḍiyya* silver currency. **2** silver-coloured. *waraʕ faḍḍi* silver paper, tinfoil.

فضّاية *faḍḍaaya* /unit n, pl -*aat*/ of a piece of silver.

فضّيّة *faḍḍiyya* /coll n, pl -*aat*/ **1** silverware. **2** silver coins.

فضّض *faḍḍaḍ* /vt/ to silver. ||*waraʕ mifaḍḍaḍ* silver foil, tinfoil. - vn *tafḍiiḍ*; ava/pva *mifaḍḍaḍ*.

اتفضّض *ʔitfaḍḍaḍ* /vi/ to be silvered. - iva *mitfaḍḍaḍ*.

ف ض ف ض

فضفض *faḍfaḍ* /vt/ to unburden oneself of (feelings etc.). *ʔinfarad biyya ʕaʃaan yifaḍfaḍ-li lli f-ʕalb-u kull-u* he took me off alone to pour out to me all that was in his heart. *ʔinta ʕaawiz waaḥid mumkin tifaḍfaḍ-lu* you need someone you can open your heart to. - vn *faḍfaḍa*; ava *mifaḍfaḍ*.

اتفضفض *ʔitfaḍfaḍ* /vi/ passive of *faḍfaḍ*. - iva *mitfaḍfaḍ*.

ف ض ل

فضل *fiḍil (a)* /vi/ **1** to remain, be left. *ʈilʕu l-ʔingiliiz fiḍlit ʕarabiyyat-hum* the English left; their cars remained. *faḍil-lina nuṣṣ' saaʕa* we still have half an hour to go. ||*fiḍilt' waraa* I kept on after him. **2** /preverb/ to continue, go on (doing something). *fiḍil yibuṣṣ' f-saʕt-u* he kept looking at his watch. - vn *faḍalaan*; ava *faaḍil*.

فاضل *faaḍil* /adj, fem *faaḍila*, pl *ʔafaaḍil*/ ≈ distinguished, honourable (a formal epithet accompanying, especially in writing, certain titles). *ḥaḍaraat il-ʔafaaḍil* ≈ distinguished guests! *ʔil-ʔustaaza l-faaḍila naẓrit il-madrasa* ≈ the very honourable headmistress of the school.

فضل *faḍl* /n pl *ʔafḍaal*/ grace, goodness, favour, benefit. *faḍl-ak ɛalayya kbiir* you've been very generous to me. *bi-faḍl illaah* by the grace of God. *miin yinkir faḍl it-taɛliim* who can deny the benefit of education? ‖ *bi-faḍl* thanks to, as in *kull*^{i} *da b-faḍl il-ɛarabiyya* it's all thanks to the car - *ʔil-faḍl*^{i} *liyya* it is (or was) thanks to me, I deserved the credit. - *min faḍl-ak* please! - *yiduum faḍl-ak* may your bounty last! (conventional reply to *ʔitfaḍḍal* q.v.).

¶ *faḍlan ɛan*↑ /prep/ besides, in addition to. *bi-yiqbaḍ mukafʔa fahriyya faḍlan ɛan murattab-u* he takes a monthly bonus in addition to his salary.

فضلة *faḍla* /n pl *fiḍal, fuḍal, fawaaḍil*/ left-over, remnant. *fiḍal ɋumaaf* remnants of material. ‖ *(min) faḍlit xeer-ak*↓ conventional formula employed when food is mentioned, as in *xadt*^{i} *maɛaaya baɋa faḍlit xeer-ak laḥma w-burtuɋaan wi-mooz* ≈ so I took along with me - all from the bounty of your goodness - meat and oranges and bananas.

فضلات *faḍalaat* /pl n/ **1** left-overs, remnants. ‖ *ʔusbuuɛ il-faḍalaat* annual week-long sale of left-over pieces of cloth **2** *[euphem]* excreta, discharges.

أفضل *ʔafḍal* /el/ better/best, preferable.

فضول *fuḍuul* /n/ nosiness, officiousness.

فضولى *fuḍuuli* /adj * and pl *-yya*/ nosey, meddlesome, officious.

فضوليّة *fuḍuliyya* /n/ nosiness, officiousness.

فضيل *faḍiil* /n pl *fuḍala*/ man of sterling character. ‖ *ʔil-faḍla lil-faḍiil* (the rest goes to the best) an expression of consolation to someone who is not getting his fair share in a deal.

فضيلة *faḍiila* /n pl *faḍaayil*/ **1** virtue, merit. *ma-ḥadd*^{i}*-ʃ yinkir ʔinn il-karam faḍiila* no one will deny that generosity is a virtue. **2** formal title of, and form of polite reference to, an Azhar scholar. *faḍiilit if-feex* ≈ His Eminence the Sheikh. *ṣaaḥib il-faḍiila* ≈ His Eminence.

مفضال *mifḍaal* /adj, no pl/ *[usu iron]* = *faaḍil*.

فضّل *faḍḍal* /vt/ **1** to prefer, favour. *ʔana ʔafaḍḍal il-qism il-ʔadabi* I prefer the Arts Department. *faḍḍal-ak ɛalayya* he preferred you to me. *ʔil-ʔadab faḍḍaluu ɛala l-ɛilm* (or *ɛan il-ɛilm*) *[prov]* ≈ better well-bred than well-read. *ʔil-ʔakl il-mufaḍḍal ɛandi* my favourite food. **2** to leave, leave behind. *ma-tfaḍḍal-ʃ*^{i} *ḥaaga fis-sanduuɋ* don't leave anything in the box. - vn *tafḍiil*; ava/pva *mifaḍḍal, mufaḍḍal*.

اتفضّل *ʔitfaḍḍal* /vi/ **1** to be preferred. *ʔin-nooɛ il-ɋadiim lissa mitfaḍḍal ɛan ig-gidiid* the old type is still preferred to the new. **2** to remain, be left over. *biɛna lli tfaḍḍal* we sold what was left. **3** to render a kindness. *ʔitfaḍḍal ɛaleena b-xibrit-ak* be so kind as to give us the benefit of your experience. *ʔitfaḍḍalu ɛalayya b-baaɋi l-ʔakl* they were kind enough to give me the rest of the food. *ma-titfaḍḍal ɛaleena b-ziyaara* do honour us with a visit! *miʃ sid-na ʃ-ʃeex yitfaḍḍal maɛaaya nuɋɛud fil-ɋahwa* would not the reverend Sheikh be so good as to sit with me in the café? - ava/iva *mitfaḍḍal*.

¶ *ʔitfaḍḍal* /fem *ʔitfaḍḍali*, pl *ʔitfaḍḍalu*/ formula of invitation. *ʔitfaḍḍal maɛaaya* please come with me. *ʔitfaḍḍal uɋɛud* please sit down. *ʔitfaḍḍali ya sitt-i* please (come in), ma'am!

ف ض ى

فضى *fiḍi (a)* /vi/ **1** to become empty. *ʔiʃ-ʃaɋɋa fiḍyit* the flat fell vacant. *laazim tistanna lamma d-daraga tifḍa* you must wait till the position becomes vacant. ‖ *ʔil-baṭṭariyya fiḍyit* the battery has gone dead. - *saɛt-i fiḍyit* my watch has run down. **2** to become unoccupied, become at leisure. *baɛd*^{i} *m-afḍa miʃ-ʃuɣl* when I'm no longer busy with work. *faaḍi ya ʔusṭa* are you free, driver? *ʔil-faaḍi yiɛmil ɋaaḍi [prov]* ≈ the idler sets himself up as a judge (over other people's affairs). - vn *faḍayaan, faḍa, fuḍiyy*; ava *faaḍi*.

فضاء، فضا *faḍa* /n/ **1** empty space. *ʔarḍ*^{i} *faḍa* vacant land. **2** interplanetary space. *safiinit faḍa* space-ship. **3** leisure time. *saɛaat faḍaa-hum* their spare time.

فضىّ *fuḍiyy* /n/ (state of) emptiness. *fuḍiyy if-fawaariɛ xawwif-na* the emptiness of the streets scared us.

فاضى *faaḍi* /adj */ empty. ‖ *rigiɛna faḍyiin* we returned empty-handed. *-kalaam faaḍi* empty senseless talk. *-ɛal-faaḍi* (1) to no purpose, as in *ʔitkallim ɛal-faaḍi* he talked to no avail, *ga ɛal-faaḍi* he came in vain, *ʔil-ʔizaaɛa xilṣit wir-radyu maftuuḥ ɛal-faaḍi* the transmission has finished and the radio is on to no purpose. (2) (also *ɛal-faaḍi w-ɛal-malyaan*) for no reason, as in *bi-yitkallim ɛal-faaḍi w-ɛal-malyaan* he'll talk whether he has anything to say or not, *bi-yiḍḥak ɛal-faaḍi w-ɛal-malyaan* he laughs for no reason.

أفضى *ʔafḍa* /el/ more/most empty.

فضّى *faḍḍa*^{2} /vt/ **1** to empty. *faḍḍeet l-ḥooḍ mil-mayya* I emptied the basin of water. **2** to free, set at leisure. *faḍḍi nafs-ak ʃiwayya* make yourself free for a while. — /vi/ **3** to empty, become empty. ‖ *ʔil-baṭṭariyya faḍḍit* the battery has gone dead. - *ʔis-saaɛa faḍḍit* the watch has run down. - vn *tafḍiyya*; ava/pva *mifaḍḍi*.

اتفضّى *ʔitfaḍḍa* /vi/ **1** to be emptied. **2** to be set at leisure. - iva *mitfaḍḍi*.

استفضى *ʔistafḍa* /vt/ **1** to consider free or unoccupied. *lamma ʔastafḍa nafs-i ḥ-azuur-ak* as soon as I can see my way out of things I'll visit you. **2** to select for empti-

ness. *ʔistafḍa ɋzaaza w-hat-ha* find an empty bottle and bring it here. - ava *mistafḍi*.

ف ط ر [1]

فطر *fiṭir (a)* /vi/ **1** to break a fast. *fiṭirt' yomeen fi-ramaḍaan* I broke the fast for two days during Ramadan. *ʔinta ṣaayim walla faaṭir* are you fasting or not? *ṣaam wi-fiṭir ɛala baṣala* he observed the fast and broke it with but an onion (a comment on illogical behaviour, or an expression of sympathy at a disappointing outcome). **2** to eat breakfast. *ʔil-baaʃa bi-yḥibb' yifrab ʃaay ɋabl' ma yifṭar* the Pasha likes to drink tea before he has breakfast. *fiṭirna b-gibna* we had cheese for breakfast. *ʔiftar-bu ɋabl' ma yitɤadda biik [prov]* (have him for breakfast before he has you for lunch) get in your blow before he gets in his. - vn *fuṭuur, fiṭaar*; ava *faaṭir, faṭraan*.

فطور *fuṭuur* /n/ **1** breakfast. **2** meal, eaten at sunset, with which the daily Ramadan fast is broken.

فطار *fiṭaar = fuṭuur*.

فطارى *fiṭaari* /adj invar/ *[Chr]* containing animal products and therefore not permitted during a fast (of food).

فطر *fiṭr* /n/ fast breaking. *ɛiid il-fiṭr* the Feast of the Breaking of the (Ramadan) Fast, Lesser Bairam.

فطرة *fuṭra↓* /n/ nuts, candy and sweets (especially those eaten at the feast celebrating the end of Ramadan).

فطير *fiṭiir* /coll n/ rounds or squares of many-layered pastry (the plainer sort may be broken in pieces and dipped into cheese, honey, cream etc., while the finer sort are made of flaky pastry with a sweet or savoury topping or filling). ‖*fiṭiir laff* rich pastry made with cream, eaten with cheese or honey. - *fiṭiir maɋli* type of round pastry cooked by frying. - *fiṭiir ir-raḥma* type of pastry distributed to the poor by those visiting the tombs of their dead relatives. - *fiṭiir miʃaltit* large rounds of rich multi-layered pastry, specifically those baked in mud ovens (considered a delicacy).

فطيرة *fiṭiira* /unit n, pl *-aat, faṭaayir*/ a round or square of *fiṭiir*.

فطاطرى *faṭaṭri* /n pl *-yya*/ professional *fiṭiir* cook, maker and seller of *fiṭiir*.

فطّر *faṭṭar* **1** /vi/ to constitute fast-breaking. *ʔil-ḥuɋan bi-tfaṭṭar fi-ramaḍaan* do injections break the Ramadan fast? **2** /vt/ to give breakfast to. *ʔil-lukanda bi-tfaṭṭar iz-zabaayin* the hotel provides breakfast for the customers. - vn *taftiir*; ava *mifaṭṭar*.

اتفطّر *ʔitfaṭṭar* /vi/ to be given breakfast. - iva *mitfaṭṭar*.

إفطار *ʔiftaar* /vn/ breaking of the (Ramadan) fast. *madfaɛ il-ʔiftaar* the cannon shot announcing the end of the daily fasting period during Ramadan.

ف ط ر [2]

فطر *faṭar (u)* /vt/ to distress. *ʔil-ḥuzn' faṭar ɋalb-i* sorrow broke my heart. - vn *faṭr, faṭaraan*; ava *faaṭir*; pva *maftuur*.

اتفطر *ʔitfaṭar* /vi/ to become heavy or distressed (of the heart). *ɋalb-i ɛala ʔibn-i tfaṭar wi-ɋalb ibn-i ɛalayya zayy il-ḥagar [prov]* (I was heart-broken over my son, but my son's heart was like stone to me) ≈ children are certain cares, but uncertain comforts. - ava *mitfiṭir*.

انفطر *ʔinfaṭar = ʔitfaṭar*. - ava *minfiṭir*.

ف ط س

فطس *fiṭis [1] (a)* /vi/ **1a** to suffocate, choke. *ʔana faṭsaan min il-ḥarr' da* I'm suffocating from this heat. **1b** to become fed up. *fiṭist' min il-ɛiiʃa di* I got choked off with that life. **2** *[deris]* to perish (of a person). *fiṭsit taḥt[a] ɛarabiyya* she got snuffed out in a car accident. ‖*fiṭis (ɛala rooḥ-u) mid-diḥk* he almost died laughing. **3** *[Isl]* to die (of animals) without being slaughtered according to the precepts governing ritual purity. *ʈallaɛ fii ʔil-ɋuʈaʈ il-faṭsa [prov]* (he claimed it had dead cats in it) he could find nothing but bad to say for it. - vn *faṭasaan*; ava *faaṭis, faṭsaan*.

فطس *faṭas (u)* /vt/ to depress, press down. *ʔil-lakma faṭasit manaxiir-u* the blow flattened his nose. - vn *faṭs*; ava *faaṭis*; pva *maftuus*.

فطس *fiṭis [2]* /adj */ gluttonous.

أفطس *ʔaftas* /adj fem *faṭsa*, pl *fuṭs*/ flat, basheḍ-in. *manaxiir faṭsa* a boxer's nose.

فطيس *fiṭiis* /adj invar/ **1** *[Isl]* not slaughtered according to Islamic precepts and hence considered inedible. **2** suffocating, airless. *ʔid-dinya ftiis* the weather is stifling. — /adv/ **3** in vain, for nothing. *raaḥ fiṭiis* it ended up a waste, as in *taɛab-i raaḥ fiṭiis* my efforts were in vain, *ʔil-ɛarabiyya raaḥit fiṭiis* the car was a total write-off. *maat fiṭiis* (1) he died for nothing. (2) he died in total obscurity.

اتفطس *ʔitfaṭas* /vi/ **1** to be depressed, be pressed down. **2** to cave in. - ava/iva *mitfiṭis*.

انفطس *ʔinfaṭas = ʔitfaṭas*. - ava/iva *minfiṭis*.

فطّس *faṭṭas* /vt/ **1** to choke, suffocate. **2** *[slang]* to kill, snuff out, bump off. - vn *taftiis*; ava *mifaṭṭas*.

اتفطّس *ʔitfaṭṭas* /vi/ passive of *faṭṭas*. - iva *mitfaṭṭas*.

ف ط ط

فطّ *faṭṭ (u)* /vi/ to spring, bound. *ʔiḍ-ḍufdaɛ raaḥ faaṭiṭ* the frog hopped away. *kaan bi-yilɛab bi-ʔastik raaḥ*

faaṭiṭ fi-wiff-u he was playing with a rubber band and it shot into his face. - vn *faṭṭ, faṭaṭaan*; ava *faaṭiṭ*.

فطّة *faṭṭa* /inst n, pl *-aat*/ a jump, a leap.

فطّط *faṭṭaṭ* /vt/ to cause to jump. - vn *taftiiṭ*; ava/pva *mifaṭṭaṭ*.

اتفطّط *ʔitfaṭṭaṭ* /vi/ **1** to jump up and down. **2** to be made to jump. - ava/iva *mitfaṭṭaṭ*.

ف ط ط ر ى see ف ط ر ١ : *faṭaṭri, faṭaṭriyya*

ف ط ف ط

فطفط *faṭfaṭ* /vi/ to jump up and down, jump about. - vn *faṭfaṭa*; ava *mifaṭfaṭ*.

ف ط م

فطم *faṭam (u)* /vt/ to wean. *faṭamit-u ɛala sana* she weaned him at a year. ‖*faṭam ir-rayy*ª *ɛan* to cease irrigating (a crop). - vn *fiṭaam, faṭm, faṭamaan*; ava *faaṭim*; pva *maftuum*.

فطمة *faṭma*¹ /pl *-aat*/ instance noun of *faṭm*.

فاطمة *faaṭimaʔ, faṭma*² /prop n/ (the Prophet's daughter) Fatima. *sitt-i-na faṭma, ʔis-sayyida faaṭima*, or *faṭma z-zahraaʔ* the Lady Fatima. - also *faṭna*.

فاطمي *faaṭimiʔ, faṭmi* **1** /adj */ Fatimid. *ʔid-dawla l-faaṭimiyya* (or *l-faṭmiyya*) the Fatimid dynasty. **2** /n */ a Fatimid.

اتفطم *ʔitfaṭam* /vi/ to be weaned. - iva *mitfiṭim*.

انفطم *ʔinfaṭam* = *ʔitfaṭam*. - iva *minfiṭim*.

ف ط ن ١

فطن *fiṭin*¹ *(a)* /vi/ to be (astutely) aware. *law fiṭint*ⁱ *lil-mawḍuuɛ mil-ʔawwil kunt*ⁱ *manaɛt-u* if I'd been aware of the matter from the beginning, I would have put a stop to it. - vn *faṭaana*.

فطن *fiṭin*² /adj * and pl *fuṭana*/ astute.

فطانة *faṭaana* /n/ astuteness.

فطين *faṭiin* /adj pl *fuṭana*/ astute.

اتفطّن *ʔitfaṭṭan* = *fiṭin*¹. *kunt*ⁱ *mitfaṭṭan li-kull*ⁱ *muʔamrat-hum il-xabiisa* I was fully aware of all their evil schemes. - vn *tafaṭṭunʔ*; ava *mitfaṭṭan*.

ف ط ن ٢

فاطمة *faṭna* /prop n/ variant of the name of (the Prophet's daughter) Fatima. - see ف ط م

ف ظ ظ

فظّ *faẓẓ* /adj pl *fuẓẓaaẓ, fuẓaẓa*/ insolent, loutish, rude.

فظاظة *faẓaaẓa* /n/ insolence.

ف ظ ع

فظاعة *faẓaaɛa* /n/ **1** hideousness, repulsiveness, heinousness. **2** /pl *-aat*/ atrocity.

فظيع *faẓiiɛ* /adj pl *fuẓaaɛ*/ **1** abominable, hideous, terrible. **2** prodigious, tremendous, terrific.

أفظع *ʔafẓaɛ* /el/ **1** more/most abominable, hideous or terrible. **2** more/most prodigious, tremendous or terrific.

استفظع *ʔistafẓaɛ* /vt/ to consider abominable, hideous or atrocious. - vn *ʔistifẓaaɛ*; ava *mistafẓaɛ*.

ف ع ص

فعص *faɛaṣ (a)* /vt/ to squash, crush. *ʔil-ɛarabiyya faɛaṣit il-waad* the car crushed the boy. - vn *faɛṣ, faɛaṣaan*; ava *faaɛiṣ*; pva *mafɛuuṣ*.

مفعوص *mafɛuuṣ* /adj pl *mafaɛiiṣ*/ runty, undersized. *ʔinta lissa ɛayyil mafɛuuṣ* you're still just a little pip-squeak. *ʔir-raagil il-mafɛuuṣ da* that little runt of a man. *ʔaxuu l-mafɛuuṣ da* that worthless squirt of a brother of his.

اتفعص *ʔitfaɛaṣ* /vi/ to be squashed, be crushed. - iva *mitfiɛiṣ*.

فعّص *faɛɛaṣ* **1** /vt/ to crush (totally or successively). *ɡuuṭa mfaɛɛaṣa* squashy tomatoes. **2** /vi/ to poke around. *balaaf tifaɛɛaṣ fil-ʔakl* stop poking around in the food. *ma tuɡɛud-fⁱ tfaɛɛaṣ fi-ɛeen-ak* don't keep rubbing your eyes. - vn *tafɛiiṣ*; ava/pva *mifaɛɛaṣ*.

اتفعّص *ʔitfaɛɛaṣ* /vi/ to be crushed (totally or successively). - iva *mitfaɛɛaṣ*.

ف ع ك ش

فعكش *faɛkiʃ* /vt/ to put into disorder, disarrange. ‖*kidbⁱ msaawi wala sudqⁱ mfaɛkiʃ [prov]* ≈ a smooth lie is more effective than an awkward truth. - also *faɦkiʃ*. - vn *faɛkaʃa*; ava/pva *mifaɛkiʃ*.

اتفعكس *ʔitfaɛkiʃ* /vi/ to become disordered, be thrown into disorder. - vn *tifaɛkiiʃ*; ava/iva *mitfaɛkiʃ*.

ف ع ل

فعل *faɛal (a)* **1** /vt/ to do, perform. *ma-yɦibbⁱ-ʃ yifɛal il-xeer* he doesn't like to do good. **2** /vi/ to act. *lamma tɡuul laazim tifɛal* when you promise (something) you should act (on it). *ʔil-ʔismⁱ l-ṭuuba wil-fiɛlⁱ l-ʔamʃiir [prov]* (talk for (the cold month of) Tuba and action for (the stormy month of) Amshir) the action doesn't match the words. - vn *fiɛl, faɛalaan*; ava *faaɛil*; pva *mafɛuul*.

¶ *faɛal fi-* to fornicate with.

فعل *fiɛl* /n pl *ʔafɛaal, fiɛaal*/ **1** action. *ʔik-kalaam sahlⁱ laakin il-fiɛlⁱ ṣaɛb* to talk is easy, to act hard. ‖*radd*ⁱ *fiɛl*

reaction. -*bil-fiʕl* in fact, really, truly. **2** /pl *ʔafʕaal* only/ *[gram]* verb.

¶ *fiʕlan* /adv/ in fact, really, truly. *ʔir-rakk' fiʕlan ʕar-raagil* it does indeed all depend on the man. *ʔil-beet maskuun fiʕlan* the house really is haunted.

فعلي *fiʕli* /adj/ actual, real. *ʔit-taxtiit il-fiʕli* the actual planning.

فاعل *faaʕil* /n/ **1** /pl *faʕala*/ doer. *faʕalit xeer* charitable people. *haniyyaa-lak ya faaʕil il-xeer [beggars]* may it reward you well, you charitable one! **2** /pl also *fuʕala*/ (unskilled) labourer. **3** /pl *-iin/ [gram]* subject (of a verbal sentence). — *ʔil-faaʕil* /no pl/ **4** unskilled manual labour force. *tiqul-f' b-tiftaval fil-faaʕil* you're acting as if you had to do menial work!

فاعليّة *faaʕiliyya*↑ /n/ efficacy. *lu faaʕiliyya ʕaʒiima f-fifaaʔ il-ʔamraaq* it has great efficacy in curing diseases.

فواعلي *fawaʕli* **1** /n pl *-yya*/ (unskilled) construction worker. **2** /adj pl *-yya/ [deris]* hardworking, characterized by brawn rather than brain.

مفعول *mafʕuul* /n/ **1** effect. *ʔil-musakkin da lu mafʕuul gaamid* this sedative has a powerful effect. ‖*naafiz il-mafʕuul* effective. -*saari l-mafʕuul* valid. -*sariiʕ il-mafʕuul* quick-acting. **2** /pl *mafaʕiil/ [gram]* object.

اتفعل *ʔitfaʕal* /vi/ passive of *faʕal*. -iva *mitfiʕil, mitfaʕal*.

انفعل *ʔinfaʕal* /vi/ **1** to react in an emotional or excited fashion, become excited, become stirred up. *ʔinfaʕalt' bil-ħikaaya di* I got worked up by this story. **2** = *ʔitfaʕal*. - vn *ʔinfiʕaal*; ava/iva *minfiʕil*.

انفعالي *ʔinfiʕaali* /adj/ melodramatic, emotional.

مفاعل *mufaaʕil* /n pl *-aat*/ reactor. *mufaaʕil zarri* nuclear reactor.

اتفاعل *ʔitfaaʕil*↑ /vi/ *[chem]* to react, interact. -vn *tafaaʕul*; ava *mutafaaʕil*.

تفاعل *tafaaʕul*↑ /n pl *-aat/ [chem]* reaction, interaction.

استفعل *ʔistafʕal*↓: *ʔistafʕal fi-*↓ to fornicate with. *ʕayzaa yistafʕal fiiha* she wants him to sleep with her. -ava *mistafʕal*.

ف ق د

فقد *faqad (i)* /vt/ **1** to cease to maintain, cease to keep, lose. *faqadt il-ħamaasa f-nuṣṣ is-sikka* I lost enthusiasm half-way through. *faqad is-sayṭara ʕala nafs-u* he lost control of himself. *faqad il-waʕy* he lost consciousness. -/the literary passive occurs/ *saʕt-i fuqdit minni* I lost my watch. **2** to bring about the downfall of. *ʔiṭ-ṭamaʕ huwwa lli faqad il-ħaraami* it was greed which ended the thief's career. *muzakrit-u maʕa ʔaṣħab-u faqadit-u* his studying with his friends led to his failure. — /vi/ **3** to retire from life's struggle, give up caring. *faqadt[a] xalaṣ ma-ʕad-f' ħadd' yhimm-i-ni* I've thrown in the towel -I don't care about anyone anymore. -vn *faqadaan*; ava *faaqid*; pva *mafquud*.

فاقد *faaqid* /adj/ **1** lost. ‖*badal faaqid* replacement for a lost official document (e.g., a passport, a driver's licence). **2** desperate.

مفقود *mafquud* /n */ missing person.

أفقد *ʔafqad* /el/ more/most desperate or ruthless. *ʔafqad walad fil-ħitta* the most ruthless character in the neighbourhood.

الفقيد *ʔil-faqiid, ʔil-faqiid* /n/ the late lamented.

اتفقد *ʔitfaqad* /vi/ passive of *faqad* 1 and 2. -iva *mitfiqid*.

انفقد *ʔinfaqad* = *ʔitfaqad*. -iva *minfiqid*.

اتفقّد *ʔitfaqqad* /vt/ to inspect, check up on. *bi-nitfaqqad ħaal iz-zarʕ* we inspect the crops. -ava *mitfaqqad*.

افتقد *ʔiftaqad* /vt/ *[Chr]* to visit and encourage (lapsed church members). *ħa-niṭlaʕ iftiqaad qabl il-ʕiid* we'll go out encouraging people to come to church (a few days) before the feast. -vn *ʔiftiqaad*.

ف ق ر[1]

فقر *fiqir* or *fuqur (a)* /vi/ to become poor. -vn *faqaraan, faqr*; ava *faqraan*.

فقر *faqar (i)* /vt/ to impoverish. *ʔis-suuq kal filuus-i w-faqar-ni* the market devoured my money and reduced me to poverty. -vn *faqr*; ava *faaqir*.

فقر *faqr* /n/ **1** poverty. **2** want, lack, shortage. ‖*faqr' damm* anaemia.

فقران *faqraan* /adj */ poor, destitute.

فقرى *faqri* /adj */ bringing bad luck, unlucky. *yoom faqri* an unlucky day. *dool naas faqriyyiin - kull' m-azur-hum ʔatniħis* those people have a curse on them; whenever I visit them I have bad luck.

فقير *faqiir* /adj pl *fuqara, faqaara/* (miserably) poor. *ʔil-faqiir riħt-u wiħʃa [prov]* ≈ the reek of poverty drives people away. *xuduu-hum faqaara yixnii-ku llaah [prov]* marry into a poor family and God will make you wealthy.

أفقر *ʔafqar* /el/ more/most destitute. *ʔafqar min ganaaħ id-dabbuur [prov]* (poorer than a wasp's wing) poorer than a church mouse.

فقايري *faqayri* /adj inv/ poor, humble.

فقّر *faqqar*[1] /vt/ to reduce to abject poverty, make destitute. -vn *tafqiir*; ava *mifaqqar*.

¶ *faqqar ɛala* to jinx with constant ill-wishing.
افتقر *ʔiftaqar* /vi/ to become poor. *fallis wi-ftaqar* he went bankrupt and became poor. - ava *miftiqir*.

ف ق ر [2]
فقرة *faqraʔ* /n pl *faqaraat*/ **1** vertebra. **2** paragraph.
فقرى *faqriʔ* /adj/ vertebral, vertebrate. *ʔil-ɛamuud il-faqri* the spinal column. *ħayawanaat faqriyya* vertebrate animals.

ف ق ر [3]
فقر *faqqar*[2] /vi/ **1** to sway rhythmically (as at a *zikr* or *zaar*). **2** to nod, rock (e.g., from drowsiness or pain). ‖ *ʔif-ʃamɛa bi-tfaqqar* the candle is flickering. - vn *tafqiir*; ava *mifaqqar*.

ف ق س [1]
فقس *faqas (i)* **1** /vi/ to hatch, hatch out. *beeḍa faqsa* a hatched egg. *kull[i] laṭɛa laazim titnaqqa qabl[i] ma tifqis* each egg-cluster must be picked off before it hatches. **2** /vt/ to catch out (s.o.) in trickery, catch out (a trick). *kaan bi-yisraħ biyya bass[a] ʔana faqast-u* he was trying to fool me but I caught him out. *faqasu l-malɛuub* they uncovered the trick. - vn *faqs, faqasaan*; ava *faaqis*; pva *maqfuus*.
فقس *faqs* /n/ hatch, brood. *baṭṭa w-faqs-a-ha* a duck and her newly-hatched brood.
فقسة *faqsa* /inst n, pl *-aat*/ a hatching out.
اتفقس *ʔitfaqas* /vi/ to be caught out. - iva *mitfiqis, mitfaqas*.
انفقس *ʔinfaqas* = *ʔitfaqas*. - iva *minfiqis*.
فقّس *faqqas* **1** /vt/ to cause to hatch. *ʔil-ħaraara faqqasit il-beeḍ badri* heat caused the eggs to hatch early. **2** /vi/ to hatch successively at short intervals (of eggs). - vn *tafqiis*; ava/pva *mifaqqas*.
اتفقّس *ʔitfaqqas* /vi/ passive of *faqqas* 1. - iva *mitfaqqas*.

ف ق س [2] see ف ق و س : *faqquus, faqquusa*

ف ق ش
فقش *faqaʃ (i)* /vt/ to break, crack. *faqaʃt il-beeḍa* I broke the egg. - vn *faqʃ, faqaʃaan*; ava *faaqiʃ*; pva *mafquuʃ*.
اتفقش *ʔitfaqaʃ* /vi/ to be broken, be cracked. - iva *mitfiqiʃ, mitfaqaʃ*.
انفقش *ʔinfaqaʃ* = *ʔitfaqaʃ*. - iva *minfiqiʃ*.
فقّش *faqqaʃ* /vt/ to smash (s.th.) or break (several things) in succession. - vn *tafqiiʃ*; ava/pva *mifaqqaʃ*.
اتفقّش *ʔitfaqqaʃ* /vi/ to be smashed (repeatedly or of several things). - iva *mitfaqqaʃ*.

ف ق ط
فقط *faqaṭ, faqaṭ* /adv/ only (so much and no more), altogether (after a sum of money). *ʔil-ʔooḍa di lil-mudarrisiin faqaṭ* this room is for teachers only.
فقّط *faqqaṭ* /vt/ to write out (the figures expressing a sum of money) in words. - vn *tafqiiṭ*; ava/pva *mifaqqaṭ*.
تفقيطة *tafqiiṭa* /pl *-aat*/ instance noun of *tafqiiṭ*.
اتفقّط *ʔitfaqqaṭ* /vi/ to be written out in words (of the figures expressing a sum of money). - iva *mitfaqqaṭ*.

ف ق ع
فقع *faqaɛ (a)* /vt/ **1** to burst. *balloona mafquuɛa* a burst balloon. *ḍaɣaṭ bi-ṣawabɛ-u ɛad-dimmil faqaɛ-u* he pressed the boil with his fingers and made it burst open. ‖ *faqaɛ giiṣ* he ripped off a loud fart. - *faqaɛ diħka* he burst out with a laugh. - *faqaɛ-u qalam* he gave him a resounding slap. - *bi-yifqaɛ il-maraara* it's infuriating. - *bi-yifqaɛ il-beḍaan [coarse]* it's a real balls-ache. **2** to infuriate, incense. — /vi/ **3** to burst out. *faqaɛit biṣ-ṣoot* she burst out screaming. - vn *faqaɛaan, faqɛ*; ava *faaqiɛ*; pva *mafquuɛ*.
فاقع *faaqiɛ* /adj/ bright, vivid, loud (of colours).
أفقع *ʔafqaɛ* /el/ **1** more/most vivid (of colours). **2** more/most extreme.
اتفقع *ʔitfaqaɛ* /vi/ **1** to burst, be burst. **2** to be or become infuriated, be or become incensed. - ava/iva *mitfiqiɛ*.
انفقع *ʔinfaqaɛ* = *ʔitfaqaɛ*. - ava/iva *minfiqiɛ*.
فقّع *faqqaɛ* /vt/ **1** to burst repeatedly or successively. **2** to bake (bread) twice over. — /vi/ **3** to become lean or thin. *gism-a-ha faqqaɛ mil-ɛaya* she lost weight because of the illness. - vn *tafqiiɛ*; ava/pva *mifaqqaɛ*.
اتفقّع *ʔitfaqqaɛ* /vi/ passive of *faqqaɛ* 1 and 2. - iva *mitfaqqaɛ*.

ف ق ف ق
فقفق *faqfaq* /vi/ to blister. *ʔidee faqfaqit* his hands came out in blisters. - vn *faqfaqa*; ava *mifaqfaq*.
فقفوقة *faqfuuqa* /n pl *-aat, faqafiiq*/ blister.
فقفيقة *fuqfeeqa* = *faqfuuqa*.

ف ق و س
فاقوس *faqquus* /coll n/ half-grown honeydew melon(s). ‖ *ʔin-naas ɛandak xiyaar wi-faqquus* ≈ you differentiate unfairly between people.
فاقوسة *faqquusa* /pl *-aat*/ unit noun of *faqquus*.

ف ق ه
فقه *fiqhʔ* /n/ Islamic jurisprudence.
فقهى *fiqhiʔ* /adj/ pertaining to jurisprudence.

فقى *fiqi* /n pl *fuqaha/* **1** professional reciter or teacher of the Koran. **2** one who combines sanctimonious hypocrisy with low scavenging ways. see further under ف ق ه ن

ف ق ه ن see also ف ق ه

فقهنة *faqhana* /n/ sanctimoniousness combined with low scavenging ways.

اتفقهن *ʕitfaqhan* /vi/ to behave in a sanctimonious yet base and greedy way. - ava *mitfaqhan*.

ف ق ى see ف ق ه : *fiqi*

ف ك ر

فكر *fikr* /n/ **1** thought, thinking. *bi-yidris fikr' syaasi* he studies political thought. *fikr-ak ʕeeh* what is your opinion? *fikr-ak yibiɛ-li bit-tasɛiira* do you imagine he'd sell to me at the fixed price? **2** care, worry. *ɛandu fikr* he has something on his mind. *balaaʃ il-fikr* stop worrying!

فكرة *fikra* /n pl *ʕafkaar/* thought, idea, conception. *ma-ɛandii-ʃ fikra xaaliṣ* I haven't the slightest idea. *fikra gdiida fiṭ-ṭibaaɛa* a new idea in printing. *ɛawziin naaxud fikra ɛan if-fuʏl* we'd like to get some idea of the work. ‖*ɛala fikra* by the way, incidentally.

فاكر *faakir* /ava/ **1** thinking. *kunt' faakir ʕinnak miʃ ḥa-tiigi* I thought you weren't coming. **2** remembering. *miʃ laazim tifakkar-ni - ʕana faakir kull[a] ḥaaga* you don't have to remind me, I remember everything. *ma-ḥadd'-ʃ fiiku fakir-ni* does none of you remember me?

فكّر *fakkar* **1** /vt/ **1a** to address (s.o.) with intent to remind. *fakkar-ni ʕakallim-u bukra* remind me to speak to him tomorrow. **1b** to call or bring to (s.o.)'s mind. *bi-yfakkar-ni b-ʕaxuu-ya* he reminds me of my brother. *ʕil-ʕuʏniyya fakkarit-ni b-ʕayyaam ʃabaab-i* the song brought back to me memories of my youth. **2** /vi/ to ponder, give thought. *xallii-ni ʕafakkar fiiha ʃwayya* let me give it some thought. *bi-yfakkar fiiha ɛala ṭuul* he thinks about her all the time. *fakkart abaṭṭal is-sagaayir* I thought of stopping smoking. ‖*ʕil-ɛabd' fit-tafkiir wir-rabb' fit-tadbiir [prov]* ≈ man proposes, God disposes. - vn *tafkiir*; ava/pva *mifakkar*.

مفكّرة *mufakkira* /n pl -*aat*/ diary, memo book, notebook.

اتفكّر *ʕitfakkar* /vi/ **1** to be reminded. **2** to ponder, give thought. *titfakkar titɛakkar [prov]* the more one thinks (about one's affairs), the more one gets depressed. - iva/ava *mitfakkar*.

افتكر *ʕiftakar* /vt/ **1** to think of as, take as. *ʕiftakart-ak if-ʃeex ɛali* I took you for Sheikh Ali. *tiftikir it-taɛyiin sahl* do you suppose it's easy to get appointed? **2** to recall, remember. *ɛala m-aftikir ma-ʃuft-uu-ʃ ɋabl' kida* as far as I remember I never saw him before. *ma-ɋdirt'-ʃ ʕaftikir ism-u* I couldn't remember his name. **3** to think of. *baɋeet ʕaftikir kalaam in-naas ɛan miraat-i* I started to think of what people had said about my wife. ‖*ʕiftikir ḥaaga ḥilwa* (or *ɛidla*) change the subject to something nicer! - *kunt iftikir ḥaaga ʕaḥsan* (you should have mentioned something better!) ≈ talk of the devil! (when an unwelcome subject of conversation appears). - *rabb-i-na ftakar-u* he died. - *ʕiftikaar-u raḥma* the fact that God thinks (of us) is a (sign of) divine mercy (said as a consolation at times of anguish and distress). - vn *ʕiftikaar*; ava *miftikir*.

ف ك ك

فكّ *fakk' (u, i)* /vt/ **1a** to undo, release, free. *fakkit iz-zaraayir* she undid the buttons. *fakk' hduum-u* he loosened his clothes. *fakkeet iṣ-ṣamuula* I unscrewed the nut. *b-afukk is-sagaayir w-abiɛ-hum farṭ* I unpackage the cigarettes and sell them one by one. ‖*fakk' gild* to soften leather. - *fakk' wiʃʃ-u* he stopped frowning, he cheered up. - *fukk-a-ha* cheer up! - *ʕahu kalaam fakk' magaalis* it's just small talk, it's just said to make conversation. **1b** to make null, invalidate. *huwwa ḥa-yfukk-i-lak is-siḥr* he will undo the spell for you. *fakk' wuḍuww-u* he invalidated his ablution (e.g., by going to the lavatory). **2a** to take apart, dismantle. *fakkeena l-mutoor* we dismantled the engine. *fakk' il-ɛuɋda* he untied the knot. *ḥabl' mafkuuk* unravelled rope. ‖*rabb-i-na yfukk' ɛuɋdit-ha* may God find her a husband. - *rabb-i-na yfukk[a] ɛaɋit-ha* may God grant her a child. - *yiɛraf yifukk il-xaṭṭ* he just about knows how to read. - *fakk iz-zimaam [admin]* demarcation of land boundaries. **2b** to change (money) into smaller units. *tifukk-i-li gneeh* could you change a pound for me? ‖*ʕafukk-u feen* ≈ a fat lot of good that does me, as in *ʕana ʕaasif giddan*. - *ʕafukk-a-ha feen ʕana ʕaasif di* 'I'm very sorry.' 'What bloody use is your being sorry to me?' **2c** *[agric]* to plough (land), break up (soil) for the first time after a previous crop has been cleared, or after irrigation. **3** to solve, relieve (pressure, tension). *fakk' zanɋit-i* he got me out of a tight spot. *ḥa-nfukk il-muʃkila di ʕizzaay* how can we resolve this problem? ‖*fakk[a] ḥaṣr*↓ to urinate, have a pee. - *xud il-filuus wi-fukk' nafs-ak* take the money and relieve yourself of your worries. — /vi/ **4** to come apart, loosen. *ʕil-faraamil fakkit* the brakes have become loose. **5a** to relax, let up (of pressure, tension), go down (of a swelling). *ʕil-waram lissa ma-fakk'-ʃ ɛanni* the swelling still

hasn't left me. *ʕiṭ-ṭawaariʔ fakkit* the emergency blew over. *ʕiz-zamta fakkit* the hot spell (of weather) broke. *diqt-u fakkit* his troubles have come to an end. **5b** to relax, have one's mind relieved of worry. *xud il-ḥuqna w-fukk" ɛan nafs-ak* get the injection and stop worrying. **6** to make off, run off. *xad il-filuus wi-fakk* he took the money and ran. *fakkeet minnu* I escaped from him. - vn *fakakaan, fakk*; ava *faakik*; pva *mafkuuk*.

فكّ *fakk*[2] /n pl *fukuuk*/ jaw.

فكّة *fakka* /n pl *-aat*/ **1** small change, coins or notes of low denomination. *ma-maɛii-ʃ fakka ʕadfaɛ it-taks* I've no change with which to pay for the taxi. **2** change (given for a larger sum of money). *maɛaak fakkit xamsa gneeh* do you have change for five pounds?

فكوك *fukuuk* /n/ incense (thus named because of its use in breaking spells).

فكيك *fakiik: qaal ya fakiik* ≈ to take to one's heels. *nataʃt[i] minnu l-maḫfaẓa w-qult[i] ya fakiik* I snatched the wallet from him and made off.

مفكّ *mifakk* /n pl *-aat*/ screwdriver.

اتفكّ *ʕitfakk* /vi/ passive of *fakk*[1] 1, 2 and 3. ‖*mafaṣl-i tfakkit* (1) I went limp (from exhaustion). (2) my joints turned to water (from fright). - iva *mitfakk*.

انفكّ *ʕinfakk* = *ʕitfakk*. - iva *minfakk*.

فكّك *fakkik* /vt/ **1** to undo successively, release successively. **2** to dismantle, take apart piece by piece. **3a** to cause to be loose. *siwaqt-ak ḫa-tfakkik il-faraamil* your driving will loosen the brakes. **3b** *[agric]* to loosen (the soil with a plough). **4** to heat and so soften (stale bread). - vn *tafkiik*; ava/pva *mifakkik*.

اتفكّك *ʕitfakkik* /vi/ **1** passive of *fakkik*. **2** to come loose. - ava/iva *mitfakkik*.

ف ك ه [1]

فاكهة *fakha* /coll n, pl *fawaakih*/ fruit(s). ‖*malḫ[i] fawaakih* liver salts.

فكهاني *fakahaani* /n pl *-yya*/ fruiterer.

ف ك ه [2]

فكاهة *fukaaha* /n/ humour.

فكيه *fakiih* /adj * and pl *fukaha*/ merry, full of humour, funny.

أفكه *ʕafkah* /el/ **1** more/most funny, entertaining etc. (of persons). **2↓** more/most attractive etc. (of things).

اتفكّه *ʕitfakkih* /vi/ to engage in light-hearted conversation, kid around. - vn *tafakkuh*; ava *mitfakkih*.

ف ل ا ر

فولار *fulaar* <Fr *foulard*> /n/ type of cheap unpatterned cotton cloth.

ف ل ا ش

فلاش *filaaʃ* <Engl> /n pl *-aat*/ **1** *[phot]* flash attachment. **2** torch, flashlight.

ف ل ا ن

فلان *fulaan[1]* <Fr *flan*> /n pl *-aat*/ *[print]* flong.

ف ل ت

فلت *filit* or *falat (i)* **1** /vi/ to slip away, slip loose. *ʕil-qalawooz itkasar fa-ṣ-ṣamuula filtit* the thread broke so the screw slipped out. *filit min ʕiid-i* he slipped from my grasp. *filitt[i] mis-sign* I escaped from prison. *ʕil-luṭaɛ illi filtit min in-naqaawa l-yadawiyya* the egg-clusters that were missed during hand-picking. *filit minhum iz-zimaam* they lost control. **2** /vt/ to let slip away. *ma-tiflituu-ʃ min ʕiid-ak* don't let it go. ‖*leeh lisaan-ak mafluut* why are you so insolent? - *ɛiyar-ha mafluut* she has no sense of proportion. - also *falaṭ*. - vn *falt, falataan*; ava *faalit*; pva *mafluut*.

فلتة *falta* /n pl *-aat*/ **1** instance noun of *falt*. ‖*faltit lisaan* a slip of the tongue. **2** prize specimen, one in a million.

مفلوت *mafluut* /adj */ loose, out of control. *mafluut il-lisaan* loose-tongued, foul-mouthed and rude.

فلاتي *falaati* /n pl *-yya*/ skirt-chaser, womanizer.

اتفلت *ʕitfalat* /vi/ **1** to work loose, slip (away). **2** passive of *falat* 2. - ava/iva *mitfilit*.

انفلت *ʕinfalat* = *ʕitfalat*. - ava/iva *minfilit*.

فلّت *fallit* /vt/ **1** to let go, let slip (away). *fallit kalaam* to make a slip of the tongue. — /vi/ **2** to slip away, make off. **3** to break wind. - vn *tafliit*; ava/pva *mifallit*.

تفليتة *tafliita* /inst n, pl *-aat, tafaliit*/ a slip. - /adverbially/ *xaragu mil-maktab tafaliit* they sneaked out of the office.

اتفلّت *ʕitfallit* /vi/ **1** to slip away one after the other. **2** to be let go, be let slip. - ava/iva *mitfallit*.

ف ل ت ت و

فلتّو *filittu* <It *filetto*> /n/ **1** *[butcher]* filet of meat. **2a** decorative edging, piping. **2b** fillet, decorated border or edge (e.g., around tiles or the face of an *ɛuud*).

ف ل ت ر

فلتر *filtar* <Engl> /n pl *falaatir*/ filter. *filtar zeet* oil filter.

ف ل ت ر -

فيلتريه *filtireeh* <Fr *fil tiré*> /n/ *[needlew]* drawn-thread work.

ف ل ج

فالج *faalig* /n/ *[path]* hemiplegia.

ف ل ح [1]
فلح *falaḥ, filiḥ (a)* **1** /vi/ to do well, succeed, prosper. *ma-falaḥ-ʃ' fil-madrasa* he didn't do well at school. *ma-fii-ʃ ḫaaga yiɛmil-ha w-yiflaḥ* he does not succeed in anything he does. *ʕit-tigaara falaḥit fi-ʕiid-u* the business flourished under his direction. *ɛumr il-xaayin ma-yiflaḥ* the treacherous never prosper. ‖*ya faaliḥ* wise guy! **2** /vt/ *[non-Cairene]* to deflower (especially with the finger). - vn *filaaḥ, falaḥaan*; ava *faaliḥ*; pva *mafluuḥa*.

ف ل ح [2]
فلح *filḥ* /adj invar/ boorish, uncouth, rough.
فليح *fileeḥ, filiiḥ: ʕabu fleeḥ* a yokel, a hick.
فلاح *fallaaḥ* /n */ **1** peasant, fellah. *ʕeeʃ ɛarraf il-fallaaḥ bi-ʕakl it-tiffaaḥ [prov]* (what does the peasant know of eating apples?) ≈ what can you expect a bumpkin to know of life's refinements? **2** *ʕil-fallaḥiin* /pl n/ the countryside. *ɛayʃiin fil-fallaḥiin wi-ma-ɛanduhum-ʃ' ʕayy' fikra ɛan il-bandar* they live in the country and don't know anything about city life.
فلاّحى *fallaaḥi* /adj invar/ pertaining to peasants. *libs' fallaaḥi* peasant dress. *daar fallaaḥi* village house built around a farmyard. ‖*gibna fallaaḥi* cheese made from skimmed milk. - *ɛeeʃ fallaaḥi* large thin round flat loaves of bread, usually eaten dry.
فلّح *fallaḥ* /vi/ to become a fellah. *saab il-madrasa w-fallaḥ min zamaan* he left school and began working as a fellah long ago. - vn *tafliiḥ*; ava *mifallaḥ*.
استفلح *ʕistaflaḥ* /vt/ **1** to regard as a hick. **2** to select for boorishness. *ya-bn-i di miʃ ɋimt-ak - tiruuḥ ʕaḥsan tistaflaḥ laha waaḥid zayyaha w-titgawwiz-u* my son, she's not for you; she had better find herself a husband as uncouth as she is. — /vi/ **3** to behave like a boor. - vn *ʕistiflaaḥ*; ava *mistaflaḥ*. see further under ف ل ح ن

ف ل ح س
فلحسة *falḥasa* /vn/ cocksureness, conceited know-it-all behaviour.
فلحوس *falḥuus* /adj/ smart-alecky, conceited.
اتفلحس *ʕitfalḥas* /vi/ to give oneself know-it-all airs, be smart-alecky. - ava *mitfalḥas*.

ف ل ح ن see also ف ل ح [2]
فلحنة *falḥana* /vn/ boorishness, boorish manners.
اتفلحن *ʕitfalḥan* /vi/ to display boorish manners. - vn *tifalḥiin*; ava *mifalḥin*.

ف ل ر see ف ل ا ر: *fulaar*

ف ل ر س –
فلوروسنت *fulurusint* <Engl>: *lamba flurusint* fluorescent light. - also *furusint*.

ف ل س [1]
فلسان *falsaan* /adj */ penniless, broke. *ʕana falsaan iʃ-ʃahr' da* I am broke this month.
فلس *falas* /n/ penury. *miʃ ɋaadir yaakul min il-falas illi huwwa fii* he's so broke he can't feed himself. ‖*ma-ɛanduu-ʃ riiḥit il-falas* he doesn't have a penny to his name, he has absolutely nothing.
¶ *bil-falas* /adv/ gratuitously. *ʕiṯ-ṭalaba b-yingaḥu l-ʕayyam-di bil-falas* these days, students pass exams without doing any work for them.
فلسانجى *falasangi* /n pl *-yya/ [joc]* bankrupt, penniless man.
أفلس *ʕaflas[1]* /el/ more/most penurious.
فلوس *filuus* /pl n/ money. *filuus waraɋ* banknotes. *filuus faḍḍa* coins. ‖*filuus migammida* large-denomination notes. - *ʕilli fluus-u ḫaraam yiɛraf baab il-maḥkama [prov]* (he whose money is tainted will know the door of the court-house) ≈ having to take your disputes to court is the surest way to financial ruin. - *ʕilli fluus-u f-geeb-u ma-ybaan ɛeeb-u [prov]* ≈ the shortcomings of a rich man are gold-plated.
فلّس *fallis* **1** /vt/ to reduce to penury, cause to go bankrupt. *liɛb il-kuʧiina fallis-ni* playing cards has left me broke. — /vi/ **2** to become broke, go bankrupt. **3** to reach the end of one's resources. *ʕana fallist' mil-wadda* I give up on that boy! - vn *tafliis*; ava/pva *mifallis*.
تفليسة *tafliisa* /n pl *-aat, tafaliis/* declaration of bankruptcy.
مفلّس *mifallis* /n */ bankrupt, penniless person. *ʕil-mifallis yifattiʃ fid-dafaatir il-ɋadiima [prov]* (a bankrupt will search in old account books) ≈ a desperate man will clutch at any straw.
اتفلّس *ʕitfallis* /vi/ to be reduced to penury. - iva *mitfallis*.
أفلس *ʕaflas[2]↑* /vi/ to go bankrupt. ‖*siyaasit il-wifaaɋ ʕaflasit* the policy of détente has failed. - vn *ʕiflaas*; ava *muflis*.
إفلاس *ʕiflaas* /n/ bankruptcy.

ف ل س [2]
فلس *fils* /n pl *ʕiflaas/ [coarse]* anus, arsehole.

ف ل س س see ف ل ف س: *falsuus*

ف ل س ط –
فلسطين *filisṭiin* or *falasṭiin* /prop n/ Palestine.

فلسطيني *filisṭiini* or *falasṭiini* **1** /adj */ Palestinian. **2** /n */ a Palestinian.

ف ل س ع

فلسع *falsaɛ* /vi/ to skedaddle, hop it. *kull[i] yoom yiruuḥ if-fuvl[i] yimḍi wi-yfalsaɛ* every day he goes to work, signs in and beats it. *ʔistalaf il-filuus wi-falsaɛ* he borrowed the money and was never seen again. - vn *falsaɛa*; ava *mifalsaɛ*.

ف ل س ف

فلسفة *falsafa* /n pl *-aat*/ philosophy. *ʔil-falsafa l-ʔislamiyya* Islamic philosophy.

فلسفي *falsafi* /adj/ philosophical.

فيلسوف *faylasuuf, filasuuf* (also *falyasuuf*) /n pl *falasfa*/ **1** philosopher. **2** egghead, intellectual.

اتفلسف *ʔitfalsif* /vi/ to split hairs, engage in casuistry. - ava *mitfalsif*.

ف ل س ن – see ف ل س [1] : *falasangi, falasangiyya*

ف ل ش see ف ل ا ش : *filaaf*

ف ل ش ش

فلش *filuff* <Engl> /n/ flush (in cards).

ف ل ص و

فالصو *falṣu* <It *falso*> /adj invar/ **1** false, counterfeit. *filuus falṣu* counterfeit money. **2** of poor quality, worthless. *raagil falṣu* a worthless man. *ʔiz-zaman illi-ḥna fii zaman falṣu* this is a lousy age that we are in.

ف ل ط [1]

فلط *falaṭ (u)* **1** /vi/ to slip away. *ʔil-ʔarnab falaṭ min ʔid-ha* the rabbit wriggled out of her hand. **2** /vt/ to allow to slip away. - also *falaṭ*. - vn *falṭ, falaṭaan*; ava *faaliṭ*; pva *mafluuṭ*.

اتفلط *ʔitfalaṭ* /vi/ **1** to slip away, escape. **2** to be let slip. - ava/iva *mitfiliṭ*.

انفلط *ʔinfalaṭ* = *ʔitfalaṭ*. - ava/iva *minfiliṭ*.

فلّط *fallaṭ* **1** /vt/ to allow to slip away successively or repeatedly. **2** /vi/ to slip away one after the other. *fallaṭna mil-madrasa mil-ḥiṣṣa l-ʔuula* we slipped out of school right from the first period. - vn *tafliiṭ*; ava/pva *mifallaṭ*.

اتفلّط *ʔitfallaṭ* /vi/ **1** passive of *fallaṭ* 1. **2** to slip away, escape. - ava/iva *mitfallaṭ*.

ف ل ط [2] see ف ل ل و ط : *falluuṭ, falluuṭa*

ف ل ط ح

فلطح *falṭaḥ* /vt/ **1** to widen (by flattening) at one end. **2** to make concave. - vn *falṭaḥa*; ava *mifalṭaḥ*.

مفلطح *mifalṭaḥ* /adj/ **1** flat, shallow. *ʔaṭbaaq mifalṭaḥa* dinner plate. **2** concave. *ɛadasa mifalṭaḥa* a concave lens.

اتفلطح *ʔitfalṭaḥ* /vi/ **1** to flatten out at the edges. **2** passive of *falṭaḥ*. - vn *tifalṭiiḥ*; ava/iva *mitfalṭaḥ*.

ف ل ع

فلعة *falɛa* /n/ huff. *balaaf il-falɛa btaɛt-ak di* there's no need for you to be so huffy.

اتفلع *ʔitfalaɛ* /vi/ to get into a huff. *bi-nkallim-u tfalaɛ wi-sab-na* we started to talk to him, but he left us in a huff. - ava *mitfiliɛ*.

ف ل ع ص

فلعص *falɛaṣ* **1** /vt/ to make chubby. **2** /vi/ to become chubby. - vn *falɛaṣa*; ava/pva *mifalɛaṣ*.

مفلعص *mifalɛaṣ* /adj/ chubby, plump.

فلعوص *falɛuuṣ* /adj/ *[deris]* self-important, uppity.

اتفلعص *ʔitfalɛaṣ* /vi/ to behave haughtily or overbearingly. *bi-yitfalɛaṣ ɛan-naas ɛala ma-fii-ʃ* he looks down on people although he is really nobody. - vn *tifalɛiiṣ*; ava *mitfalɛaṣ*.

ف ل ف س

فلفسة *falfasa* /vn/ *[joc]* high-flown drivel.

فلفوس *falfuus* (also *falsuus*) /n pl *falafiis*/ *[joc]* clever dick, smart-aleck.

اتفلفس *ʔitfalfis* /vi/ *[joc]* to give oneself know-it-all airs. - vn *tifalfiis*; ava *mitfalfis*. cf ف ل س ف

ف ل ف ص

فلفص *falfaṣ* /vi/ to wriggle (out of bonds, out of a tight spot). *fiḍilt afalfaṣ li-ḥadd[i] ma fakkeet nafs-i mit-taktiifa* I kept wriggling until I worked myself free of the bonds. *misku fiyya ɛaʃaan il-ʏada bass[i] ɋdirt afalfaṣ miz-zanɋa di* they pressed me to stay for lunch but I managed to wriggle out of that tight spot. - vn *falfaṣa*; ava *mifalfaṣ*.

فلفوص *falfuuṣ* /n pl *falafiiṣ*/ a shifty individual, a slippery customer.

اتفلفص *ʔitfalfaṣ* = *falfaṣ*. - vn *tifalfiiṣ*; ava *mitfalfaṣ*.

ف ل ف ل

فلفل *filfil* /coll n/ pepper(s), peppercorn(s). *filfil ʔiswid* black pepper. *filfil ruumi* sweet peppers. *filfil baladi* chili peppers.

فلفلة *filfila* /unit n, pl *-aat*/ a pepper, a peppercorn. ‖*ya filfila ya kaydaa-hum* you saucy tease!
فلفلاية *filfilaaya* = *filfila*.
فلافل *falaafil* /pl n/ common dish consisting of dried broad beans soaked and pounded together with herbs and spices, shaped into balls and deep-fried in oil (more often called *ṭaʕmiyya*).
فلفل *falfil* /vt/ **1** to pepper, apply pepper to. **2** to cook (especially rice) plain. *ruzz' mfalfil* plain boiled rice. — /vi/ **3** to become incensed, become agitated. *bi-tḥaawil tixallii-ni ʔafalfil mil-ɣiira* she's trying to make me burn with jealousy. - vn *falfala*; ava/pva *mifalfil*.
مفلفل *mifalfil* /adj/ kinky (of hair).
اتفلفل *ʔitfalfil* /vi/ **1** to be seasoned with pepper. **2** to be cooked plain (especially of rice). **3** to become incensed, become agitated. - vn *tifalfiil*; ava/iva *mitfalfil*.

ف ل ق
فلق *falaq (a)* /vt/ **1** to split, crack in two. *falaq dimaɣ-ha bil-balṭa* he split her head in two with the axe. **2** to annoy, irritate, incense. *di ḥaaga tiflaq* this is maddening! - vn *falq, falaqaan*; ava *faaliq*; pva *mafluuq*.
فلق *falq* /n pl *fuluuq*/ **1** split length of a (palm) trunk (used in rural building as a rafter, prop etc.). **2** crack. *falq' fil-ḥeeṭa* a crack in the wall.
فلقة *falqa* /n pl *-aat*/ **1** /inst n/ **1a** a splitting, a crashing. **1b** an irritation, an annoyance. **2** /also pl *filaq*/ half (of s.th. split in two parts). ‖*falqit qamar* (a slice of moon) ≈ a beauty.
فالق *faaliq* /n pl *fawaaliq*/ fault (in the earth's crust).
فلقة *falaqa* /n/ pl *-aat*/ staff with a rope looped through its ends which, when twisted, secures the feet of one who is to be bastinadoed. - also *falaka*.
اتفلق *ʔitfalaq* /vi/ passive of *falaq*. ‖*ʔitfiliq* ≈ if you don't like it, lump it! - *xallii yitfiliq* he can go to hell! - iva *mitfiliq*.
انفلق *ʔinfalaq* = *ʔitfalaq*. - iva *minfiliq*.
فلّق *fallaq* /vt/ **1** to split into several pieces. *fallaqt-a-ha talat ḥitat* I split it in three. **2** to administer the bastinado to. — /vi/ **3** to become cracked, become covered with cracks. *ʔarḍ' mfallaqa* cracked (parched) earth. **4** to take to one's heels, beat it. **5** *[naut]* to drift away from dockside. - vn *tafliiq*; ava/pva *mifallaq*.
تفاليق *tafaliiq* /pl n/ *[text]* dye-streaks.
اتفلّق *ʔitfallaq* /vi/ **1** to become cracked. *ʔil-ḥeṭaan itfallaqit* the walls have become covered with cracks. **2** to be split into several pieces. **3** to be bastinadoed. - ava/iva *mitfallaq*.

ف ل ق س
فلقس *falqas* **1** /vt/ *[coarse]* to make (s.o.) bend over. **2** /vi/ to bend over. - vn *falqasa*; ava/pva *mifalqas*.
اتفلقس *ʔitfalqas* /vi/ **1** to bend over. **2** to be made to bend over. - vn *tifalqiis*; ava/pva *mitfalqas*.

ف ل ك [1]
فلك *falak* /n/ **1** universe, celestial sphere. *ʕilm il-falak* astronomy. **2** /coll n/ metal discs on the bottom of a threshing sled (see Pl.D, 2). **3** /pl *falaayik*/ buttocks. **4** /n pl *ʔaflaak*/ star, planet.
فلكة *falaka*[1] /unit n, pl *-aat*/ **1** one of the metal discs on the bottom of a threshing sled (see Pl.D, 2). **2** *[slang]* a buttock.
فلكى *falaki* /adj/ **1** astronomic(al). **2** astrological.

ف ل ك [2]
فلوكة *filuuka* /n pl *falaayik*/ felucca, (small) boat with sail.
فلايكى *falayki* /n pl *-yya*/ sailor of a felucca, boatman.

ف ل ك [3]
فلكة *falaka*[2] <T *falaka*> /n pl *-aat*/ staff with a rope looped through its ends which, when twisted, secures the feet of one who is to be bastinadoed. - also *falaqa*.
فلّك *fallik* /vt/ to administer the bastinado to. - vn *tafliik*; ava/pva *mifallik*.
اتفلّك *ʔitfallik* /vi/ to be bastinadoed. - iva *mitfallik*.

(ف ل ك س)
فلكس *falaks* <Engl *flux*> /n/ soldering alloy.
فولكس *vulkis* or *fulkis* or *fuluks* <Germ trade name> /n/ Volkswagen car.

ف ل ك ش
فلكش *falkif* /vt/ to upset, throw into disarray. *falkift ig-gawaaza* I upset the marriage arrangements. - vn *falkaʃa*; ava/pva *mifalkif*.
اتفلكش *ʔitfalkif* /vi/ to be upset, be thrown into disarray. - iva *mitfalkif*.

ف ل ل [1]
فلّ *fall*[1] *(i)* /vi/ to slip away, make off. *ʔil-ḥabl' fall' min ʔiid-u* the rope slipped out of his hand. ‖*fall' w-ṭaar* he sped off. - vn *fall, falalaan*; ava *faalil*.
فالل *faalil* /adj/ unravelled, untwisted. *ḥabl' faalil* unravelled rope.
فلّ *fall*[2] /n/ cheap quality jute cloth used for sacking.
فلّة *falla*[1] /unit n, pl *-aat*/ piece of jute cloth.

اتفلّ ʕitfall /vi/ to unravel, untwine. *ʕil-ħabl itfall* the rope has untwisted. - ava *mitfall*.

ف ل ل [2]
فلّ *fall*[3↑] *(i)* /vt/ to dent (iron). - commonly used in unelevated speech in the expressions *ma-yfill*[i]*-ʃ il-ħadiid ʕilla l-ħadiid [prov]* (only iron dents iron) ≈ diamonds cut diamonds. *ʁamal-ha b-ṭariiqa tfill il-ħadiid* he did it with great force. - vn *fall, falalaan*; ava *faalil*; pva *mafluul*.

ف ل ل [3]
فلّ *fill* <Gr *phellos*> /coll n/ cork.
فلّة *filla*[1] /n pl *-aat*/ **1** /unit n/ a cork, a piece of cork. **2** cigarette filter.
فلّاية *fillaaya = filla*.

ف ل ل [4]
فلّ *full* /coll n/ Arabian jasmine (Jasminum sambac). - applied metaphorically with a complimentary sense: *bint*[i] *zayy il-full* a perfectly lovely girl. *ʕil-ʕasʁaar rixiiṣa w-maʁquula w-zayy il-full* the prices are cheap, reasonable and just dandy. *xallit if-faqqa zayy il-full* she left the flat in perfect condition. *ʕana ʁawza l-hiduum zayy il-full* I want the clothes white as snow. ‖*ṣabaaħ-ak full* and *ṣabaaħ il-full* ≈ a lovely morning to you! - *ya miit full* cheerful greeting or compliment. - *full*[a] *ʁaleek* well done!
فلّة *fulla* /unit n, pl *-aat*/ a jasmine flower.
فلّاية *fullaaya = fulla*.

ف ل ل ا
فيلاّ *villa, filla*[2↓] <It *villa*> /fem n pl *-aat, vilal*/ **1** villa, detached house, bungalow. *villit-ak* or *ʕil-villa btaʁt-ak* your villa. **2** self-contained apartment comprising two storeys within a larger building, duplex apartment.

ف ل ل و ط
فلّوط *falluuṭ* /adj pl *falaliiṭ*/ self-important.
فلّوطة *falluuṭa* /n/ pompous person.

ف ل ل ي ن
فلّين *filliin* /coll n/ **1** cork. **2** *[bot]* phellem.
فلّينة *filliina, falliina* /unit n, pl *-aat*/ a cork, a piece of cork.

ف ل م
فيلم *film* <Engl> /n pl *ʕaflaam*/ **1** film, movie. **2** photographic film.

ف ل م ن ك
فلمنك *falamank* <prob T *felemenk*> (also *gibna falamank*) /n/ Edam(-type) cheese.

ف ل ن [1]
فلان *fulaan*[2] or *filaan* /n, fem *fulaana* or *filaana*/ designation substituted for the name of an unspecified person. *bi-yquulu ʁala waaħid fulaan qalb-u ħnayyin* they say about someone, 'So-and-so has a kind heart'. *fulaan il-fulaani* Mr. So-and-so. *lis-sitt ik-kibiira fis-sinn aquul ya xalt-i fulaana* an older woman I address as my Aunt So-and-so. - /frequently used to avoid mentioning one's own name/ *qul-lu flaan bi-ysallim ʁaleek* ≈ give him my best wishes.
فلانى *fulaani* or *filaani* /adj */ adjectival equivalent of *fulaan*. *di nẓam-ha tirkab biṭ-ṭariiqa l-fulaniyya* it should be mounted in such-and-such a way. *ma-tqul-lii-ʃ raaħ ħitta - qul-li raaħ il-ħitta l-fulaniyya* don't just tell me he's gone somewhere; tell me where he went exactly.

ف ل ن [2] see ف ل ا ن : *fulaan*[1]

ف ل ن [3] see ف ل ل ى ن : *filliin, filliina, falliina*

ف ل ن ك
فلنك *falank* <T *felenk*> /coll n/ sleeper(s), tie(s) (in a railway track).
فلنكة *falanka* /unit n, pl *-aat*/ a sleeper, a tie (in a railway track).
فلنكاية *falankaaya = falanka*.

ف ل ن ن see ف ن ل ل : *falinna*[↓]

ف ل و
فلو *falw* /n/ colt.
فلوة *filwa* /n/ filly.

ف ل ى
فلّاية *fallaaya* /n pl *-aat*/ fine-tooth comb.
فلّى *falla*[2] /vt/ **1** to remove lice, nits, fleas or bugs from the hair or clothes of (s.o.). *ʕil-ʕumm*[i] *bi-tfalli ʁyal-ha* the mother picks the lice and nits from her children's hair. **2** to do a thorough and careful job on. *ʕana ʁawz-ak tifalli l-ʁarabiyya kull-a-ha* I want you to go over the whole car with a fine-tooth comb. - vn *tafliyya*; ava/pva *mifalli*.
اتفلّى *ʕitfalla* /vi/ **1a** to be removed from the hair and clothes (of lice etc.). **1b** to remove one's lice etc., or have them removed. *ʕiṭ-ṭeer bi-yitfalla wiṣ-ṣayyaad*

qaaɛid yitqalla [prov] (the birds pick at their nits while the hunter is on tenterhooks) while the unwary are at ease, he who wishes to exploit them tensely makes his plans. **2** to be gone over carefully and thoroughly, be gone over with a fine-tooth comb. - ava/iva *mitfalli*.

ف ل ى س – see ف ل س ف : *falyasuuf*

ف ل ى ن see ف ن ل ل : *falaayin*

ف ل ى ه
فيليه *fileeh* <Fr> /n pl *-aat*/ filet (of meat).

ف م ل ى ا
فاميليا *familya* <It *famiglia*> /n pl *-aat*/ family. ‖ *ʔil-familya* polite form of reference to a wife.

ف م م
فمّ *fumm* /n pl *ʔifmaam, fimaam*/ **1a** mouth, orifice. ‖ *fumm il-miɛda* the epigastrium. - *fumm il-xaliig* a district in Cairo, opposite Roda Island, at the entrance of the ancient Canal. - *ʔitkallim bil-fumm il-malyaan* he didn't mince his words. - *yislam fumm-ak* well said! - *yislam fumm illi sammaa-k* ≈ well said! well done! (indirect compliment to the person addressed). **1b** mouth-piece (of, e.g., a water-pipe, see Pl.I, 6). *fumm' sgaara* cigarette-holder. **2** (one) washing. *ʔil-ɤasiil ɛaayiz fummeen qabl' ma tiṭlaɛ il-buqaɛ* the laundry needs a couple of washings before the stains will come out.

ف ن ا ر
فنار *fanaar* <T *fenar* from Gr> /n pl *-aat*/ lighthouse.

ف ن ء see ف ن ى ¹ : *finaaʔ*

ف ن ج ا ن see ف ن ج ل : *fingaan*

ف ن ج ر
فنجر *fangar* **1** /vt/ to lavish money on. *fuufi gooz ʔuxt-ik mifangar-ha ʔizzaay* just look how your sister's husband showers money on her! **2** /vi/ to spend lavishly (on s.o.). *ʔawwil ma qabaḍ il-ġirfeen raaḥ fangar biihum ɛala ʔaṣḥaab-u* as soon as he had cashed the money he went and blew it all on (things for) his friends. - vn *fangara*; ava/pva *mifangar*.
فنجرى *fanjari* /n pl *-yya*/ big spender.
اتفنجر *ʔitfangar* /vi/ to spend money lavishly, be prodigal with money. *ʔayy' ḥaaga tuqaɛ fi-ʔiid-u b-yitfangar biiha* everything that comes his way he spends straight off. - vn *tifangiir*; ava *mitfangar*.

ف ن ج ص
فنجص *fangaṣ [deris]* **1** /vt/ to lavish money on. **2** /vi/ to live in high style. - vn *fangaṣa*; ava *mifangaṣ*.
اتفنجص *ʔitfangaṣ* /vi/ to spend money lavishly, be a big spender. - vn *tifangiiṣ*; ava *mitfanɤaṣ*.

ف ن ج ل
فنجال *fingaal* (also *fingaan*) /n pl *fanagiil, fanagiin*/ cup. *fingaal qahwa* (1) a coffee-cup. (2) a cup of coffee.
فنجل *fangil* **1** /vt/ to make (the eyes) round as saucers. **2** /vi/ to become wide open (of the eyes). ‖ *ɛenee mifangila* he is wide awake. - vn *fangala*; ava/pva *mifangil*.
اتفنجل *ʔitfangil* /vi/ to grow round as saucers (of eyes). - ava *mitfangil*.

ف ن خ
فنخ *fanax (a)* **1** /vt/ to undo, break up. *fanaxu l-xuṭuuba* they broke the engagement. **2** /vi/ to fail, collapse. *ʔig-gawaaza fanaxit* the marriage has failed. - vn *fanx, fanaxaan*; ava *faanix*; pva *mafnuux*.
اتفنخ *ʔitfanax* /vi/ **1** to fail, come to naught. **2** to be made to fail, be brought to naught. - ava/iva *mitfinix*.
فنّخ *fannax* /vi/ to feel lazy, drowsy or listless (e.g., after a heavy meal). - vn *tafniix*; ava *mifannax*. see further under ف ن ى خ

ف ن د ا
فوندا *funda* <It *fonda*> /interj/ *[naut]* drop anchor!

ف ن د ا ن
فندان *fundaan* <Fr> /n/ fondant.
فندانة *fundaana* /unit n, pl *-aat*/ a piece of fondant.
فندناية *fundanaaya* = *fundaana*.

ف ن د ق
فندق *funduq* /n pl *fanaadiq*/ hotel.
فندق *fandaq* /vt/ to open completely (e.g., a door). *miin mifandaq il-baab kida* who's left the door wide open like that? - vn *fandaqa*; ava/pva *mifandaq*.
اتفندق *ʔitfandaq* /vi/ to be opened completely. - iva *mitfandaq*.

ف ن د ى
فوندى *fundi* <perh It *fondo*> /n/ **1** make-up base, foundation cream. **2** toe and heel reinforcements (of shoes).

ف ن ر see ف ن ا ر : *fanaar*

[1] (ف ن س)
فنس *fans* /adj invar/ useless, pointless. *riḥla fans* a useless trip.
فونس *funs* <prop n *Alphonse*> /n/ Alphonse mangoes. ‖ *ʕaamil funs* ≈ full of himself, - also *ʔalfuns*.

[2] ف ن س see ف ن و س : *fanuus*

[1] ف ن ش
فنش *finiʃ* <Engl> /n/ finish, finishing off (in carpentry, varnishing etc.). *ʕamalt[i] finiʃ lik-kursi* I've put the finishing touches to the chair. *ʔidda l-maktab warniiʃ il-finiʃ* he gave the desk the final coat of varnish.
فنّش *fanniʃ* /vt/ **1** to leave unfinished. *fanniʃt iʃ-ʃuɣla leeh* why did you drop the work in midstream? **2** to fire, give the sack to. - vn *tafniiʃ*; ava/pva *mifannaʃ*.
اتفنّش *ʔitfanniʃ* /vi/ **1** to be left unfinished. **2** to be fired, be sacked. - iva *mitfannaʃ*.

[2] ف ن ش
مفنش *mifanniʃ: manaxiir mifanniʃa* wide, flaring nostrils.

[1] ف ن ط
فنط *funṭ* <perh It *punto*> /n/ champ, scorer. *ḥaawil yiʕmil funṭ[i] ʠuddaam il-banaat* he tried to show off in front of the girls.

[2] ف ن ط
فنّط *fannaṭ* /vt/ to shuffle (cards). *fannaṭ il-kutʃiina w-ʠaṭaʕ-ha* he shuffled the cards and cut them. ‖ *ʔana fannaṭt il-mugtamaʕ* I've been all through society, I've riffled through society. - vn *tafniiṭ*; ava/pva *mifannaṭ*.
اتفنّط *ʔitfannaṭ* /vi/ to be shuffled (of cards). ‖ *naas mitfannaṭiin [slang]* select people, the *crème de la crème*. - iva *mitfannaṭ*.

ف ن ط ا ز see ف ن ط ا س : *funṭaaz*

ف ن ط ا س
فنطاس *funṭaas, fintaas* (also *funṭaaz*) /n pl *fanaṭiis, fanaṭiiz*/ large storage tank. *funṭaas gaaz* kerosene tank.

ف ن ط ز
فنطزيّة *fanṭaziyya* <It *fantasia*> **1** /n/ extravaganza. *lamma tirgaʕ ḥa-niʕmil fanṭaziyya* when you return we'll put on an extravaganza. *ʕamalu fanṭaziyya fid-dukkaan* they've done up the shop quite imaginatively. *hidum-ha baʠit fanṭaziyya* her clothes, now, are mere whimsy. *ʠaḍḍeena yoom ʔaaxir fanṭaziyya* we've spent a most fantastic day! **2** /adj invar/ fanciful, capricious. *kalaam fanṭaziyya* fanciful talk, talk not to be taken seriously. *ʕiiʃa fanṭaziyya* life of pleasure, dolce vita. **3** /adv/ for free, gratis. *ʔiddaa-ni k-kitaab fanṭaziyya* he gave me the book with no charge. *rikibna l-ʔutubiis fanṭaziyya* we got a free bus ride.
فنطز *fanṭaz* **1** /vt/ to show a good time to. *ʔana ḥ-afanṭaz-ak lamma ʔangaḥ* I'll take you out on the town when I pass my exams. **2** /vi/ to enjoy oneself, have a good time. - vn *fanṭaza*; ava/pva *mifanṭaz*.
اتفنطز *ʔitfanṭaz* /vi/ **1** to enjoy oneself, have a good time. **2** to give oneself airs. *ʔinta b-titfanṭaz ʕala ʔeeh* what makes you so cocky? **3** to be given a good time. - ava/iva *mitfanṭaz*.

ف ن غ ر –
فونوغراف *funuɣraaf* <Fr> /n pl *-aat/ [obsol]* phonograph, record-player.

ف ن ك see ف ن ى ك : *finiik*

ف ن ل ل
فنلّة *fanilla* (also *falinna*↓) <prob T *fanilâ* from It> /n pl *-aat, fanaayil, falaayin/* **1** vest, undershirt. **2** any short-sleeved casual shirt of lightweight (usually knitted) material, T-shirt. – /no pl/ **3** flannel. *banṭaloon fanilla* flannel slacks.

ف ن ل ى ا
فانيليا *fanilya* or *vanilya* (also *banilya*↓) <It *vaniglia*> /n/ vanilla. *jilaati vanilya* vanilla ice cream.

ف ن ن
فنّ *fann* /n pl *funuun/* **1** art. *fann is-sinima* the art of the cinema. *ʔil-funuun ig-gamiila* the fine arts. ‖ *ʔibn[i] fann* a skilled, dexterous person. - *ʔig-gunuun funuun [prov]* madness is of (all) kinds, it takes all sorts. **2** *ʔil-fann* the art of Egyptian popular song. *ɣaawi l-fann* devotee of popular music and song. *ʔahl il-fann* singers and musicians.
فنّي *fanni* /adj */ **1** artistic. *maghuud fanni* artistic effort. *rattibit il-ward[i] b-ṭariiʠa fanniyya* she arranged the flowers artistically. *ʕamal fanni* a work of art. **2** expert. *ʃuɣl[i] fanni* expert workmanship. *naas fanniyyiin fin-nukat* expert jokers. **3** technical. *taʕliim fanni* technical training. *muṣṭalaḥaat fanniyya* technical terms. *li-ʔasbaab fanniyya* for technical reasons. *ʠarba*

qaḍya fanniyya technical knockout. — /n */ **4** (certified) technician.

فنّان *fannaan* /n */ artist.

فنّن *fannin* /vi/ to be ingenious, be inventive. *bi-tfannin fil-ʕakl* she is a creative cook. *fannin fin-nayama* he juggled cleverly with the tune. ‖*saʕalt-u suʕaal duɣri wi-qaɛad yifannin* I asked him a straight question but he went on beating about the bush. - vn *tafniin*; ava *mifannin*.

تفنينة *tafniina* /pl *-aat, tafaniin/* instance noun of *tafniin*. ‖ *ʕabu t-tafaniin* a versatile man, a man of many talents.

اتفنّن *ʕitfannin* = *fannin*. *ʕin-naas il-ʕayyaam di b-yitfanninu fil-hayaafa* people these days are masters of triviality. - ava *mitfannin*.

ف ن و س

فانوس *fanuus* <Gr *phanos*> /n pl *fawaniis/* lantern. *fawaniis ramaḍaan* lanterns carried by children (originally by children begging a traditional tip) during Ramadan. ‖*fanuus ɛarabiyya* car headlight. - *fanuus siḥri* epidiascope, magic lantern.

ف ن ى [1]

فنى *fini (a)* /vi/ to come to nothing, perish. *yaama giil fini baɛd' giil* how many generations have come and gone! *ḥabaayib ktiir finyu taḥt' riglee-ha* many lovers were destroyed by her. - vn *fana*; ava *faani*.

فنى *fana (i)* /vt/ **1** to cause to perish, cause to come to nothing. *ʕiz-zinuub hiyya ɛadiww-i-na l-faani* sins are our mortal enemy, sins are our undoing. **2** to spend to no avail, waste. *faneet ɛumr-i f-xidmit-hum gum il-ʕaaxir daasu ɛalayya* I wasted my whole life in their service, and in the end they treated me like dirt. *yaama faneet waraq fi-ktaabit gawabaat* how much paper I've wasted writing letters. - vn *fanayaan*; ava *faani*; pva *mafni*.

فانى *faani* /adj */ **1** transient, ephemeral. *ʕid-dinya fanya* the world is ephemeral. *kull-u faani [prov]* nothing will last forever. **2** mortal.

فناء *finaaʕ* /n pl *-aat, ʕafniya/* courtyard. *finaaʕ il-madrasa* school yard, school playground.

اتفنى *ʕitfana* /vi/ passive of *fana*. - iva *mitfini*.

ف ن ى [2]

فونية *funya* <T *funya* from Gr> /n pl *-aat, funay, funy, fawaani/* nozzle (e.g., of a primus stove).

ف ن ى خ see also ف ن خ

فنيخ *fanyax* /vt/ **1** to prevent the fulfilment of. *fanyax il-fusḥa* he called off the outing. — /vi/ **2** to fail to be fulfilled, come to nothing. *ʕil-ɛuzuuma fanyaxit* the party never took place. *ʕil-ittifaaq fanyax* the agreement came to nothing. **3** to lie about, laze about. - vn *fanyaxa*; ava/pva *mifanyax*.

اتفنيخ *ʕitfanyax* /vi/ **1** passive of *fanyax* 1. **2** to feel lazy, feel drowsy (e.g., after a heavy meal). - vn *tifanyiix*; iva/ava *mitfanyax*.

ف ن ى ر

فنيار *funyaar* /n pl *-aat, fanayiir/* flaming torch, lamp with a naked flame.

فنير *fanyar* /vi/ to shine brightly (of a lamp, and the like). - vn *fanyara*; ava *mifanyar*.

ف ن ى ك

فنيك *finiik* <Fr *phénique*> /n/ carbolic acid.

ف ه

فه *fih* /fem n, pl *-aat/* twentieth letter of the Arabic alphabet. - also *faa, faaʕ, feeh*.

ف ه د

فهد *fahd* /n pl *fuhuud, fuhúda/* leopard.

ف ه ر س

فهرس *fihris, fahras* [1] /n pl *fahaaris/* index, catalogue. *fihris muḥtawayaat ik-kitaab* index of the contents of the book. *fihris kuruut* a card catalogue.

فهرس *fahras* [2] /vt/ to make a list of, index, catalogue. *bi-yfahrasu l-mawaḍiiɛ illi ḥa-titzaaɛ* they list the topics that will be broadcast. - vn *fahrasa*; ava/pva *mifahras*; pva *mufahras*.

اتفهرس *ʕitfahras* /vi/ to be indexed, be catalogued, be listed in order. - iva *mitfahras*.

ف ه ق

فهق *fahaq (a)* /vi/ to gasp, catch one's breath (in surprise or awe). ‖*fahaqit fi-wiff-u* she has cast an evil spell on him (by gasping with envy in his presence). - vn *fahq, fahaqaan*; ava *faahiq*.

فهقة *fahqa* /n pl *-aat/* **1** /inst n/ a gasp. **2** facial skin blemish (believed to be caused by the gasp of a person with the evil eye).

اتفهق *ʕitfahaq* /vi/ (impersonal) passive of *fahaq*. *ʕitfahaq fi-wiff(-a-ha)* (she is) under a spell (caused by the gasp of a person with the evil eye). - iva *mitfihiq*.

ف ه ل و

فهلوى *fahlawi* <P *pahlawî*> /adj * and pl *-yya/* clever,

shrewd. *ʕil-walad da fahlawi* that boy is a smart operator.

فهلوة *fahlawa* /n/ cleverness. *xallaṣ iʃ-ʃuvl^{i} b-fahlawa* he accomplished the work with nimble thinking. *nigiḥ bil-fahlawa* he pulled it off with his wits.

ف ه م

فهم *fihim (a)* /vt/ **1a** to understand. comprehend. *ma-fhimt^{i}-ʃ id-dars* I didn't understand the lesson. *ʕinta miʃ faahim ʔilmit kalaam-i* you don't realize what I'm saying. *bi-nifham baʕḍ* we understand each other. *fihimt il-maʔlab* I caught on to the trick. **1b** to see the reason for. *ʕana miʃ fahma ʔillit ʕadab-ak di* I don't understand your rudeness. **2** to have a grasp of. *ma-b-yifham-ʃ ingiliizi* he doesn't understand English. **3** to assume (to be plausible). *kunt^{i} faahim ʕinnu msaafir* I understood that he was out of town. — /vi/ **4** to have knowledge, be knowledgeable. *bi-tifham fil-muḥasba* do you know anything about accounting? *hiyya b-tifham fil-ʕuṣuul* she knows how to follow the code of social conduct. - vn *fahm*; ava *faahim*; pva *mafhuum*.

مفهوم *mafhuum*↑ /n pl *mafahiim*/ notion, concept. *ʕil-masal da ɣalaṭ bil-mafhuum ig-gidiid* that proverb is wrong according to the new way of thinking.

مفهوميّة *mafhumiyya* /n/ **1** understanding, judgement. *mafhumiyyit-i lil-mawḍuuʕ ʕinnu miʃ ḥa-yingaḥ* as I understand the matter, it will not succeed. ‖*yikuun fi-mafhumiyyit-ak ʕinn* be informed that, as in *yikuun fi-mafhumiyyit-ak ʕinni miʃ ḥ-aagi l-ʕaṣr* for your information, I shan't be coming in the afternoon. **2** understanding, sympathy. *ʕinta ʕabu l-mafhumiyya* or *ʕinta kull-ak mafhumiyya* you are very understanding.

فهّامة *fahhaama*↑ /adj invar/ discerning, intelligent, sharp.

فهّيم *fahhiim* /adj pl *fahhiima*/ discerning, intelligent, sharp.

اتفهم *ʔitfaham* /vi/ passive of *fihim*. - iva *mitfihim*.

انفهم *ʔinfaham* = *ʔitfaham*. - iva *minfihim*.

فهّم *fahhim* /vt/ to make understand, explain to. *fahhim-na yaʕni ʕeeh* tell us what it means. *xallii-ni ʕafahhim saami ʕaʃaan ma-yizʕal-ʃ* let me explain to Sami so that he doesn't get upset. - vn *tafhiim*; ava *mifahhim*.

اتفهّم *ʔitfahhim* /vt/ **1** to have (s.th.) explained. *ʔitfahhimna l-mawḍuuʕ kull-u* we had the whole thing explained to us. **2** to arrive at an understanding of. *xallii-ni ʕatfahhim il-mawʔif ig-gidiid li-waḥd-i* let me figure out the new situation by myself. - vn *tafahhum*; ava *mitfahhim*.

اتفاهم *ʔitfaahim* /vi/ **1** to seek a mutual understanding. *ʔaʕadt^{i} yoom bi-ḥaal-u ʕatfaahim maʕaa min ɣeer fayda* I spent a whole day trying to come to a mutual understanding with him, but it was no use. *sib-hum yitfahmu maʕa baʕḍ* leave them to work it out between themselves. **2** to arrive at a mutual understanding. *ʔitneen yiʃarku baʕḍ^{i} f-ʃaʔʔa laazim yikuunu mitfahmiin* two people who share a flat must be in mutual agreement. - vn *tafaahum*; ava *mitfaahim*.

تفاهم *tafaahum* /n/ understanding, agreement. *suuʕ tafaahum* misunderstanding.

استفهم *ʔistafhim* /vi/ to inquire, make inquiries. *yalla nistafhim minhum ʕan il-ʔaḍiyya* let us ask them about the case. ‖*ʕalaamit istifhaam* question mark. - vn *ʔistifhaam*; ava *mistafhim*.

ف و ا ل

فوال *fuwaal, vuwaal* (also *buwaal*↓) <Fr> /n/ cotton voile.

ف و ت ١

فات *faat (u)* /vt/ **1** to leave behind. *fuutu ʃ-ʃunaṭ ʕandi* leave the bags at my place. *ma-han-ʃ^{i} ʕalayya ʕamʃi w-ʕafut-kum* I didn't have the heart to go away and leave you. *fatuu naas-u* his family abandoned him. **2** to pass by, slip by. *ʔid-door faat-ak* you missed your turn. *ma-yfut-ak-ʃ^{i} wala hamsa* not a whisper escapes you. *fat-ni l-ʔutubiis* I missed the bus. ‖*fat-ha l-ʔaṭr* she's missed the boat, she's on the shelf. - *ḥ-afut-lak di l-beeʕa* you can have it at your price this time. - *ʔilli faat-ak fuut-u [prov]* ≈ don't waste time with those who neglect you. - *faat-ak nuṣṣ^{i} ʕumr-ak* you missed something wonderful as in *faat-ak nuṣṣ^{i} ʕumr-ak illi ma-kunt^{i}-ʃ maʕaana ʔimbaariḥ bil-leel* you really missed something by not being with us last night! — /vi/ **3** to elapse, go by. *faat kaam yoom* a few days went by. *ʔis-sana lli faatit* last year. ‖ *ʔilli faat maat [prov]* ≈ what is done is done, let bygones be bygones. - *xalli yoom-ak yifuut ʕala xeer* ≈ lay off (or else)! - *yoom* (or *leela* etc.) *miʃ faayit* a day (or night) of unending trouble. - *nahaar-ak miʃ faayit* you won't see another day! I'll get you for that! **4a** to pass, pass by. *bi-tfuut min hina kull^{i} yoom* she passes through here daily. *ʔil-mayya bi-tfuut min taḥt il-baab* the water flows under the door. ‖*fuut ʕalee bil-makwa* give it a going-over with the iron. **4b** to slip by, slip past. *law ik-koora faatit minnu tibʔa goon* if the ball gets past him it's a goal. *ʔin-nukta faatit ʕalee* he didn't get the joke. **5** to pay a call, drop in. *fuut bukra*

drop in tomorrow. *futt[a] ʕala ʔaxuu-ya* I paid a call on my brother. *ma-tfuut ʕaleena* come and see us! ‖*fuut* (or *fuutu) biina ʕala* ... let's be off to .... **6** to become clear, become unblocked. *ʔil-masuura faatit* the pipe became unblocked. - vn *foot, fawaat, fawataan*; ava *faayit*.

¶ *faat fi-* to pass through, go through. ‖*yifuut fil-ħadiid* ≈ he is invincible.

فوتة *foota* /inst n, pl *-aat*/ **1** (short) visit. *futna ʕaleehum foota qṣayyara* we dropped in on them for a short visit. **2** bout, fit (of illness). *ʔikminnaha ħaamil bi-tfuut ʕaleeha fotaat kull' saaʕa wit-tanya* since she's pregnant she has frequent (fainting) spells.

فوّت *fawwit* /vt/ **1** to allow to elapse. *ya rabb' fawwit il-ʔayyaam di ʕala xeer* O Lord, let these days pass without harm! **2** to allow to go past, let through. *ʔil-buliiṣ ma-fawwit-naa-ʃ min if-ʃariʕ* the police wouldn't let us through the street. *ʔil-baab ma-bi-yfawwit-ʃ il-ʕarabiyya* the doorway is too narrow for the car. *fawwit-lu l-ɣalṭa* overlook his mistake. ‖*ʔil-baab yifawwit gamal* (the door can let a camel through) ≈ go then! no one's stopping you! - *ʔismaʕ min hina w-fawwit min hina* let it in one ear and out the other. - *fawwit(-ha)* never mind! forget it! - *dool fawwituu-ha ʕaleek* they seem to have put one over on you. **3** to pass, cause to go along or through. *xad ik-koora w-fawwit-ha tafwiita ħilwa* he took the ball and made a beautiful pass. *fawwit il-xeeṭ fil-xaraz* string the beads! **4** to sanction, permit. *madaam ʕarabiyyaat if-firka ʕaṭlaana fawwituu-li ʔugrit it-taks* since the company car is out of order allow me the taxi fare. **5a** to cause to pass by, take past. *fawwit-ni min is-suuq* he took me past the market. **5b** to cause to visit, take for a visit. *fawwitt-a-ha ʕala ʔumm-i* I took her to visit my mother. — /vi/ **6** to slip. *ʔit-tiruus bi-tfawwit* the gears slip. ‖*muxx-i fawwit* I've slipped a cog, I can't keep my mind on things. - *fawwit fi-taqdiir* he miscalculated. **7** to be leaky. *ʔis-sifoon bi-yfawwit* the cistern leaks. **8** to break wind silently. - vn *tafwiit*; ava *mifawwit*.

تفويتة *tafwiita* /pl *-aat*/ instance noun of *tafwiit*.

اتفوّت *ʔitfawwit* /vi/ passive of *fawwit*. - iva *mitfawwit*.

اتفاوت *ʔitfaawit* /vi/ to vary. *mustawayaat mitfawta* varying standards. - vn *tafaawut*; ava *mitfaawit, mutafaawit*.

ف و ت [2]

فوت *fuut* <Engl *foot*>: *gazma fuut* soccer boots.

ف و ج

فوج *foog* /n pl *ʔafwaag*/ group, party, band.

ف و ح

فاح *faaħ (u)* /vi/ to spread, diffuse itself (of an odour). ‖*riiħ-u faaħit* ≈ his reputation has begun to stink. - *takl-u yruuħ tifarraq-u yfuuħ [prov]* ≈ food eaten is gone, food distributed to the poor is not forgotten. - vn *fooħ, fawaħaan*; ava *faayiħ*.

فوّح *fawwaħ* **1** /vt/ to cause to diffuse, spread (a smell). **2** /vi/ = *faaħ*. - vn *tafwiiħ*; ava/pva *mifawwaħ*.

ف و خ ر

فوخر *fooxar* /vi/ to become hollow, disintegrate from within. *ʔil-ħeeṭa mfoxra* the wall is full of cavities. ‖*ʕaql-u mfooxar* he has holes in his head, he's loony. - ava *mifooxar*.

ف و ر [1]

فار *faar[2] (u)* /vi/ to boil to overflowing. *ʔibʕid il-laban ʕan in-naar qabl' ma yfuur* take the milk from the fire before it boils over. ‖*damm-u faar* his blood boiled, he became furious. - vn *fawaraan*; ava *faayir*.

فاير *faayir* /adj/ **1** (too) large. *maqaas faayir* large-size. *ʔij-jakitta fayra ʕalee* the jacket is too big for him. **2** vivacious and (too) accessible (of a girl). **3** ripe (of fruit).

فور *foor*↑: *ʕala l-foor* immediately, straight away.

¶ *fawran* /adv/ immediately, straight away.

فورى *fawri* /adj/ instantaneous. ‖*targama fawriyya* simultaneous translation.

فورى *foori* /adv/ immediately, straight away. *ʔil-muħaami b-yiqbaq il-muqaddam foori* the lawyer cashes the advance payment immediately. · *dafʕ' b-taqsiiṭ ʔaw foori* payment in instalments or all at once.

فوّار *fawwaar* /adj invar/ effervescent, fizzy.

فوّر *fawwar[1]* /vt/ to cause to boil up. *ma-tfawwar-ʃ il-qahwa laħsan yiruuħ il-wiff* don't let the coffee boil up or it'll lose its 'head'! ‖*fawwar damm-i* he made my blood boil, he made me furious. - vn *tafwiir*; ava/pva *mifawwar*.

اتفوّر *ʔitfawwar[1]* /vi/ to be boiled up. - iva *mitfawwar*.

ف و ر [2]

فورة *foora* <It *fuori*> /n/ score set before the start of a game, the first player to reach it being the winner.

فار *faar[3] (u)* /vi/ to be completed (of a game, the players having reached the set score). - vn *fawaraan*; ava *faayir*.

فوّر *fawwar[2]* /vi/ **1** to reach the set score (in a game). — /vt/ **2** to reject, dispense with, drop. *fawwarna xamsiin fil-miyya min il-muwaẓẓafiin* we dismissed fifty percent of the employees, *fawwaru l-mafruuʕ* they

dropped the project. *laazim tifawwar il-beet* you must get the house off your hands. **3** to dismantle, take apart. *fawwar iṭ-ṭurumba* he dismantled the pump. *markib mifawwara* an unrigged ship. - vn *tafwiir*; ava/pva *mifawwar*.

اتفوّر *ʔitfawwar²* /vi/ passive of *fawwar²*. - iva *mitfawwar*.

ف و ز

فاز *faaz (u)* /vi/ to win. *faazu bil-matʃ* they won the match. *fuzt[a] ɛalee* I beat him. *faaz bi-faraf* to win honourably. - vn *fawazaan, fooz*; ava *faayiz*.

فوز *fooz* /n/ victory.

فايز *faayiz* /n */ winner, victor.

ف و ض [1]

فوضى *fawḍa* /n/ chaos.

فوضوى *fawḍawi* **1** /adj * and pl *-yya*/ chaotic, anarchical. **2** /n * and pl *-yya*/ anarchist.

الفوضويّة *ʔil-fawḍawiyya* /n/ anarchism.

فوضجي *fawḍagi* /adj pl *-yya*/ **1** anarchical, disorderly. **2** heedless, irresponsible.

ف و ض [2]

فوّض *fawwaḍ[1], fawwiḍ* /vt/ **1** to entrust, commit. *fawwiḍt[i] ʔamr-i liik ya rabb* Lord, I have entrusted my fate to You! **2** to empower, commission. *ʔana mfawwaḍ-ak fil-mawḍuuɛ* I've given you full powers to act in the matter. - vn *tafwiiḍ*; ava/pva *mifawwaḍ*.

مفوّض *mufawwaḍ* /adj */ empowered, authorized. *waziir mufawwaḍ* minister plenipotentiary.

مفوّضيّة *mifawwaḍiyya, mufawwaḍiyya* /n pl *-aat*/ (diplomatic) legation.

اتفوّض *ʔitfawwaḍ[1]* /vi/ **1** to be entrusted, be committed. **2** to be empowered, be commissioned. - iva *mitfawwaḍ*.

فاوض *faawiḍ* /vt/ to negotiate with. *ḥa-nfawiḍ-hum ɛala ḥquq-na* are we going to negotiate with them about our rights? - vn *mifawḍa, mufawḍa*; ava *mifaawiḍ*.

مفاوضة *mufawḍa* /n pl *-aat*/ negotiation.

اتفاوض *ʔitfaawiḍ* /vi/ **1** to negotiate (with one another). **2** to be negotiated with. - vn *tafaawuḍ*; ava/iva *mitfaawiḍ*.

ف و ض [3]

فوّض *fawwaḍ²* /vt/ to leave (as a remnant). *lahafu l-ʔakl[i] w-ma-fawwaḍu-lii-ʃ ḥaaga* they wolfed down the food and left me nothing. - vn *tafwiiḍ*; ava/pva *mifawwaḍ*.

اتفوّض *ʔitfawwaḍ²* /vi/ to be left over. - iva *mitfawwaḍ*.

see further under ف ى ض

ف و ط

فوطة *fuuṭa* /n pl *fiwaṭ, fuwaṭ*/ **1a** towel. *fuuṭit wiʃʃ* hand towel. **1b** napkin. **2** dusting cloth. **3** saddle cloth. **4** covering or veil for a woman's head. **5** sanitary towel.

فوّاطة *fawwaaṭa* /n pl *-aat*/ towel rail, towel rack.

فوّط *fawwaṭ* /vt/ **1** to cover with a *fuuṭa*. *sawwaaq it-taks[i] fawwaṭ il-ɛaddaad ɛaʃaan ma-ḥadd[i]-ʃ yiqul-lu ʔuqaf* the taxi-driver wrapped the meter with a duster so that no-one would tell him to stop. **2** to dry with a towel. *fawwaṭit ras-ha* she dried her hair with a towel. — /vi/ **3** to put on a sanitary towel. - vn *tafwiiṭ*; ava/pva *mifawwaṭ*.

اتفوّط *ʔitfawwaṭ* /vi/ to be covered or cover oneself with a *fuuṭa*. - ava/iva *mitfawwaṭ*.

ف و ق

فاق *faaq (u)* **1** /vt/ to surpass. *faaq il-kull* he surpassed everyone. *ḥubb[i] yfuuq il-waṣf* a love beyond description. **2** /vi/ to return to one's normal state of consciousness. *lissa ɛalayya n-noom - ʔistanna lamma ʔafuuq* I'm still sleepy, wait till I'm properly awake. *faaq min taʔsiir il-minawwim* he recovered from the effect of the sleeping pills. *fuqt[i] w-ɛirifʔ[i] ʔamʃi* I sobered up and found I could walk. *faayiq wi-raayiq* in the best of (mental or physical) health. ‖*faaq li-nafs-(u)* to regain (one's) senses, start behaving in a reasonable manner again. - *da-nta faayiq* ≈ so you're in the mood (well, I'm not). - vn *fawaqaan*; ava *faayiq*.

فوق *fooq* **1** (also *fooq min*) /prep, w pron suff also *foqii-* (1st sing *fooqi* or *foqiyya*)/ **1a** on top of. *fooq is-suṭuuḥ* on the roof. *bi-yitlibis fooq ir-raas* it is worn on the head. *wiqiɛ min fooq il-madna* he fell from the top of the minaret. *lamma l-quuṭa tissabbik xaaliṣ fis-samna w-tibqa fooq minnaha* when the tomatoes are well cooked in the clarified butter and it has risen to the top. ‖*fooq ir-riiḥ* windward. **1b** over and above, in excess of. *ḥ-aḥuṭṭ-i-lak di fooq il-beeɛa* I'll throw this in for you free of charge. *ɛadad-hum fooq il-miyya* there are more than a hundred of them. **1c** above and beyond. *di ṣaɛba fooq ʔimkaniyyit if-fubbaan* this is too difficult for the young. *fooq il-ɛaada* extraordinary. **2** /adv/ above. *ma-fii-ʃ ḥadd[i] fooq* there's no one above, there's no one upstairs. *bi-yitɛayyinu min fooq* they are appointed from above. *bi-yaaxud kart[i] min fooq w-kart[i] min taḥt* he takes a card from the top and a card from the bottom. *baṣṣit-li min fooq li-taḥt* she looked me up and down. ‖*baqa fooq* he improved his lot. - *ʔilli ybuṣṣ[i]*

fooq yitɛab [prov] (who looks up will tire) ≈ envying those who are richer than yourself will bring you grief. ¶ *fooq ma* /conj/ above what, beyond what. *b-aḥibb-ik fooq ma titṣawwari* I love you more than you imagine. *ʔif-faay murr' fooq ma d-dinya murra* the tea is more bitter than life! -*fooq ɛan* /prep/ more than. *ɛumr-u fooq ɛan miit sana* it is more than a hundred years old.

فوقاني *foqaani* /adj */ upper, uppermost. *ʔil-fakk il-foqaani* the upper jaw. *ʔil-foqaani taḥtaani* upside-down, topsy-turvy.

فوّق *fawwaq* /vt/ to restore to (one's normal state of) consciousness. *ʔiddii-lu qalam yifawwaq-u* give him a slap to bring him to. -vn *tafwiiq*; ava *mifawwaq*.

اتفوّق *ʔitfawwaq* /vi/ **1** to be brought to normal consciousness. **2** (also *tafawwaq*) to excel. *ʔil-quṭn il-maṣri b-yitfawwaq fit-tiila* Egyptian cotton has the best staple. *nagaḥ bi-tafawwuq* he passed with high marks. -vn *tafawwuq*; ava/iva *mitfawwaq, mutafawwiq*.

ف و ل [1] see also ف ء ل

فوّل *fawwil'* /vi/ to mention possible misfortune, thus tempting Providence. *ma-tfawwil-ʃ' ɛalee* don't jinx him by going on about it! -vn *tafwiil*; ava *mifawwil*.

اتفوّل *ʔitfawwil* /vi/ (impersonal) passive of *fawwil'*. *dool wahmagiyya l-daragit ʔinnuhum yixaafu min ʔayy' ḥaaga yitfawwil ɛaleeha* they are so superstitious that they fear anything one can possibly associate with an omen. -iva *mitfawwil*.

ف و ل [2]

فول *fuul* /coll n/ bean(s) (especially broad beans, one of the staples of the Egyptian diet). *fuul midammis* dried broad beans cooked in a stoppered container over a slow fire or in hot ashes. *fuul naabit* (1) dried broad beans soaked till they sprout. (2) a dish made of the same, variously seasoned. ‖*fuul sudaani* peanuts. -*fuul ruumi* a variety of large broad bean.

فولة *fuula* /unit n, pl -*aat*/ a bean, a broad bean. ‖*kull' fuula w-laha kayyaal [prov]* (every bean has its weigher) ≈ every Jack has his Jill. -*ma-titball'-ʃ fi-buqq-u fuula [prov]* he can't keep his mouth shut about anything, he has a big mouth. -*laqaṭt il-fuula* I saw through the trick. -*ɛaawiz yiɛraf il-fuula w-miin zaraɛ-ha* he wants to know every little detail. -*fuula wi-tqasamit nuṣṣeen* as like as two peas in a pod.

فولاية *fulaaya* = *fuula*.

فوليّة *fuliyya* /n/ **1** dish of peeled sprouted broad beans cooked with tomatoes. **2** confection made with peanuts.

فوّال *fawwaal* /n pl *fawwaala*/ grain-seller, corn-chandler.

فوّالة *fawwaala* /n pl -*aat*/ urn-shaped pot used for slow-cooking beans.

ف و ل [3]

فاول *faawil* <Engl> /n pl -*aat*/ foul, instance of foul play (in team games). *qarab fawlaat kitiir* he committed a lot of fouls.

فوّل *fawwil*[2] /vi/ to play dirty (in team sports). -vn *tafwiil*; ava *mifawwil*.

ف و ل [4] see ف و ا ل: *fuwaal*

ف ى

فى *fi-* /w pron suff *fii-* (1st sing *fiyya*)/ preposition indicating **1** location or position, both tangible and intangible. *fil-beet* in the house, at home. *fis-suuq* on the market. *qabilt-u fis-sikka* I met him on the way. *fir-radyu* on the radio. *mitrakkib fis-saqf* mounted on the ceiling. *fil-miraaya* in the mirror. *fit-tilifoon* on the telephone. *ʔid-daɛwa fil-maḥkama* the case is in the court. *fii f-raas-u ḥagaat* (1) he is planning something, he has designs. (2) he has something on his mind. ‖*laabis ʔaxḍar f-axḍar* dressed all in green. **2** direction toward or to a position of contact with. *ramit nafs-a-ha fil-baḥr* she threw herself into the sea. *ma-tbuṣṣ'-ʃ fiʃ-fams* don't look into the sun. *wiff' f-wiff* face to face. *manaxiir-u fis-sama* he has his nose in the air, he is conceited. *ʔil-maḍrab xabaṭ fiṭ-ṭarabeeza* the bat knocked against the table. **3** circumstance or condition. *fil-bard* in the cold. *fin-naṭara* in the rain. *fi-faqr* in poverty. *fi-ɣyaab-ak* in your absence. *fi-ɛizz in-noom* in the depths of sleep. *qult' f-sirr-i* I said to myself. **4** position or point in time. *ʔiḥna ʔasfiin ʔinn' ginaa-lak fis-saɛaa-di* we're sorry to have come at such an hour. *fi-yoom il-gumɛa* on Friday. *fi-mawaɛiid muḥaddada* at specified times. *ma-qult'-lii-ʃ fil-ʔawwil leeh* why didn't you tell me in the first place? *ʔiḥna f-fahr' sitta* this is the month of June. **5** qualification or specification. *ʔarbiɛiin santi fiṭ-ṭuul* forty centimetres in length. **6** object of attention, endeavour or design. *bi-yitkallim fiʃ-ʃuɣl* he's talking about work. *ḥ-aɛmil ʔeeh fir-raagil da* what am I to do with this man? *huwwa lli ɛamal-ha fiina* he's the one who did it to us. *qaddim fiyya ɛariiḍa* he presented a petition against me. *ʔawṣaaf ma-hiyyaa-ʃ fii* inapposite descriptions of him. *ʔana fi-lli baɛd' kida* I'm worried about what's coming. *xud-lak fiiha bariiza* take ten piastres for it. *ɣaff' fil-miɀaan* he rigged the scales. *fiiha*

ʃeeh law xaragt^{i} l-waḥd-i what's wrong with my going out on my own? **7** cause or reason. *ɛiyi fiiha* he became ill because of it. *ʃitxanɋu fi-bint* they quarrelled over a girl. *xadt^{i} fiiha talatt iyyaam giza* I was docked three days' pay because of it. **8** multiplication. *talaata f-talaata* three times three. **9a** ratio. *dasatiir xamsiin fi-xamsiin* building stones, fifty by fifty. *ɛaʃara fil-miyya* ten percent. **9b** rate. *ʃooḍa bi-tneen gineeh fiʃ-ʃahr* a room for two pounds a month. **10** partitive relationship. *waaḥid fiina* one of us. *ḥadd^{i} fiikum muɛtariḍ* does anyone of you object? *miin fiihum ʃaḥsan xayyaaṭ* which of them is the best tailor? || *ʃinta lli fiihum* you're the best among them. **11** sequential relationship. *yoom fi-yoom* day after day. *sigaara f-sigaara* cigarette after cigarette. **12** /with transitive verbs/ intensification or prolongation of action. *bi-yḥayyu f-baɛḍ* they greet one another warmly. *bi-ynaḍḍaf fis-silaaḥ* he's cleaning away at the weapons. *ḍarab fiyya* he gave me a beating. *zaakir fi-duruus-ak ʃaḥsan-lak* you'd do better to work at your lessons.

فيه *fii, fiih* /part/ there is, there are. *fii ɛarabiyya barra* there is a car outside. *ma-fii-ʃ ḥadd^{i} hina* there is no one here. *fii sittaat bi-yiʃtaɤalu fil-ḥukuuma* there are women working in the government. *fii naas ṣanayɛiyya b-tilbis ɛafriita* there are some workmen who wear overalls. ||*fii ʃeeh* what's up? what's the matter? - *(lissa) ma-fii-ʃ* there has not (yet) elapsed, as in *miʃi min hina ma-fii-ʃ saaɛa* he left here less than an hour ago, *lissa ma-fii-ʃ gumɛa* less than a week ago.

ف ى ت ق see also ف ت ق

فيتق *feetaq* /vi/ to develop a hernia. - ava *mifeetaq*.

ف ى د

فاد *faad (i)* /vt/ **1** to benefit. *da mumkin yifiid il-balad kitiir* that could help the country a lot. **2** to apprise. *fad-ni ɛan istilaam gawaab-i* he acknowledged receipt of my letter. **3** to reply to (s.o.) in response to a request for information. *ma-fidt^{i}-nii-ʃ bil-maḷluub* you didn't give me the information I asked for. - vn *fayadaan*; ava *faayid*.

فايدة، فائدة *fayda* /n pl *fawaayid*/ **1** benefit, advantage. *ʃeeh faydit il-ɤamm* what's the use of worrying? *di baɛzaɋa fi-lli ma-luu-ʃ fayda* this is squandering money for nothing. ||*ma-fii-ʃ fayda* it's no use, there's no point, as in *ʃana garrabt^{i} kull^{a} ḥaaga bass^{i} ma-fii-ʃ fayda* I have tried everything, but nothing works. **2** interest (on an investment). *siɛr il-fayda* the rate of interest.

أفيد *ʃafyad* /el/ more/most beneficial, more/most advantageous.

أفاد *ʃafaad↑ = faad.* - vn *ʃifaada*; ava *mufiid*.

إفادة *ʃifaada* /n pl *-aat*/ **1** response to a request for information. **2** notification.

مفيد *mufiid* /adj/ **1** useful,' beneficial. *ʃakl^{i} mufiid* nourishing food. ||*ʃil-muxtaṣar il-mufiid* in short. **2** *[gram]* complete (of a sentence).

استفاد *ʃistafaad (yistafiid, yistafaad↓)* /vi/ to derive benefit. *ʃid-dars illi tɛallimnaa ɋaruuri nistafaad minnu* we'll surely benefit by the lesson we've learned. - vn *ʃistifaada*; ava *mistifiid, mustafiid*.

مستفيد *mustafiid* /n */ beneficiary.

ف ى ر

فير *feer* <Fr *fer*> /n pl *-aat*/ curling or crimping iron.

ف ى ر و ز see ف ر و ز

ف ى ز

فيزة *fiiza, viisa* <prob Fr> /n pl *-aat, fiyaz*/ visa.

ف ى س ك

فياسكة *fiyaska* <It *fiasca*> /n pl *-aat*/ flask.

ف ى ش

فيش *fiiʃ* <Fr *fiche*> /coll n/ **1a** counter(s), token(s), chip(s) (in games). **1b** metal tokens stamped by the bank with the number of a promissory note and retained by the drawer. **2** index cards. — /n/ **3** *fiiʃ wi-taʃbiih* official police document bearing finger-prints and a photograph which a citizen must present when applying for the Civil Service or the Armed Forces.

فيشة *fiiʃa* **1** /n pl *-aat*/ electric plug. **2** /unit n pl *-aat, fiyaʃ*/ **2a** a counter, a token, a chip (in games). **2b** a metal token given to the drawer of a promissory note. **2c** an index card. **3** /no pl/ *= fiiʃ w-taʃbiih.*

فيّش *fayyiʃ* /vt/ to make a record of (promissory notes, of a bank). - vn *tafyiiʃ*; ava *mifayyiʃ*.

اتفيّش *ʃitfayyiʃ* /vi/ passive of *fayyiʃ. kimbiyaala mitfayyiʃa* recorded promissory note. - iva *mitfayyiʃ*.

ف ى ض see also ف و ض [3]

فاض *faaḍ (i)* /vi/ **1** to be left over, remain. *faaḍ maɛaaya xamsa saaɤ* I was left with five piastres. *ʃilli yfiiḍ mid-diriis yiwakkiluu lil-bahaayim* the dried clover that's left they feed to the animals. **2** to flood, overflow. *ʃil-baḥr^{i} faaḍ* the river flooded. *ɛenay-ya faaḍit bid-dumuuɛ* my eyes flooded with tears. ||*faaḍ biiha l-buka* she could not restrain her tears. - *faaḍ biihum* they had enough, they became fed up. - *ɛala feeḍ il-kariim* (living

on the bounty of God) penniless. - vn *feeḍ, fayaḍaan*; ava *faayiḍ*.
فيضان *fayaḍaan* /n pl *-aat*/ flood.

ف ى ظ
فايظ *faayiż* /n/ **1** excess, overflow, surplus. *ʕif-fakmaan bi-yṭallaɛ il-faayiż min il-ɛarabiyya* the exhaust-pipe lets the excess gases out of the car. **2** overflow outlet. *faayiż il-banyu* the bath-tub overflow outlet. **3a** usurious rate of interest. *xad ɛalee faayiż* he charged an excessive rate of interest on it. *bi-ysallif bil-faayiż* he makes loans at usurious rates. **3b** *ʕil-faayiż* usury. *fuɤlit-u l-faayiż* his profession is usury.
فايظجى *fayiżgi* /n pl *-yya*/ usurer.
فيّظ *fayyaż* **1** /vt/ to relieve or carry off an overflow. *ʕil-xurm' bi-yfayyaż il-mayya lamma tziid* the hole lets out the water when it rises. **2** /vi/ to act as an outlet for an overflow. *ʕil-balf' bi-yfayyaż li-waḥd-u* the (relief) valve works automatically. **3** to practise usury. - vn *tafyiiż*; ava/pva *mifayyaż*.

ف ى ع
فاع *faaɛ (i)* /vi/ **1** to spread, diffuse (of an odour). **2** to bestir oneself to (vigorous) action. *fiɛt' fiihum ḍarb' bil-ɛaṣaaya* I fell upon them with the stick. - vn *feeɛ, fayaɛaan*; ava *faayiɛ*.
فيعة *feeɛa* /inst n, pl *-aat*/ a spurt of activity.
فيّع *fayyaɛ* /vt/ **1** to diffuse (an odour). **2** to arouse to (vigorous) action. *kal ṭurfi fayyaɛ-u fil-ʕakl' xallaṣ ɛalee* the pickles he ate made him attack the food with gusto so that he polished it off. - vn *tafyiiɛ*; ava/pva *mifayyaɛ*.
اتفيّع *ʕitfayyaɛ* /vi/ to be aroused to (vigorous) action. - iva *mitfayyaɛ*.

ف ى ل [1]
فيل *fiil* /n pl *fiyala, ʕafyaal, fiyaal, fiyuul, fuyuul, fiyúla, fiyíla*/ **1** elephant. ‖*banṭaloon rigl il-fiil* bell-bottomed trousers. - *sinn il-fiil* ivory. - *daaʕ il-fiil [path]* elephantiasis. **2** bishop (in chess).
فيلة *fiila*[1] /n pl *-aat*/ female elephant.
فيّل *fayyil* /vi/ *[deris]* to grow to elephantine proportions, become big and fat. - vn *tafyiil*; ava *mifayyil*.

ف ى ل [2]
فيله *fiila*[2] <Gr *phullo*> /n/ paper-thin sheets of dough used in flaky pastry, mille-feuille.

ف ى ل س – see ف ل س ف : *faylasuuf*

ف ى ل ل إ
فيلاّ *fiyilla* <trade name *Viyella*> /n/ twill-weave flannel made of a mixture of cotton and wool.

ف ى ن
فين *feen* **1** /interrog adv/ where? at what place? *sagayr-i feen* where are my cigarettes? *huwwa saakin feen* where does he live? *ʕinta ruḥt' feen* where did you go? ‖*di kaanit feen w-ana feen* or *wi-da kan-li feen* ≈ how in the world did this happen to me? - *ʕinta feen-ak* where've you been keeping yourself? - *feen wi-feen lamma* it seemed like an eternity, it took a long time, as in *feen wi-feen lamma ga taks' w-wiqif* it seemed like an eternity before a taxi came and stopped! *feen wi-feen lamma yxallaṣ* it takes him ages to finish! *feen wi-feen lamma tlaaqi l-mubilyaat di* this furniture is hard to find, you'll spend ages looking for it! - *feen* ... exclamation expressing nostalgia or nostalgic regret ≈ ah, alas, how long ago ..., as in *feen ʕayyaam-ak lamma kunna b-niftaɤal sawa* alas, how long it's been since we worked together! *feen min yoom ma kunna sawa f-bariis* ah, how long ago it was that we were in Paris together! - *(bass') feen* ... but alas, as in *kunta ɛawza ʕasaafir bariis bass' feen* I wanted to travel to Paris, but alas .... **2** /rel pron/ wherever. *feen ṭarabeezit il-ʕakl' tlaqii gambaha* wherever the dining table is, you'll find him beside it. ‖*law kunt' feen* wherever you may be, as in *ḫ-agiib-ak taani law kunt' feen* I'll bring you back no matter where you may be.

ف ى ن ك
فيونكة *fiyunka* <T *fiyonga* from It> /n pl *-aat*/ bow. *ɛamalit laha ḍfirteen bi-fyunka* she put her hair in two plaits tied with a bow.

ف ى ن و
فينو *fiinu* <It *fino*> /adj invar/ fine, fine-textured. *xarasaana fiinu* fine-textured concrete. ‖*ɛeef fiinu* French(-style) bread (usually made with white flour).

ف ى ه
فيه *feeh* /fem n, pl *-aat*/ twentieth letter of the Arabic alphabet. - also *faa, faaʕ, fih*.

ف ى ى [1]
فيّة، فئة *fiyya* /n pl *-aat*/ grade, category. *ʕil-ɋumaaf fiyyaat tabaɛ guudit iṣ-ṣanf* cloth comes in different grades according to the quality of the type. *ʕiddii-ni talat ṭawaabiɛ min fiyyit ɛaʃara saaɤ* give me three ten-piastre stamps. see further under ف ء

فيّا *fayya* /vt/ to grade, categorize, sort. *ʔil-beeḍ nifayyii ḥasab il-ḥagm* we sort the eggs according to size. - ava/ pva *mifayyi*.
اتفيّا *ʔitfayya* /vi/ to be graded, be categorized, be sorted. - iva *mitfayyi*.

² ف ى ى see ف ا ى : *faaya*

ف ى ى و م
الفيّوم *ʔil-fayyuum* /prop n/ the Fayoum, large oasis south of Cairo (one of the richest agricultural areas of Egypt, considered, by some, to be the dividing point between Upper and Lower Egypt).

فيّومى *fayyuumi* `/pl -yya/ **1** /adj/ pertaining to the Fayoum. ‖*(ʒinab) fayyuumi* variety of sweet yellow grape. -*farxa fayyuumi* variety of speckled chicken. **2** /n/ an inhabitant of the Fayoum.

ف ى ى ى س
فيّيس *fayyiis* /adj pl *fayyiisa*/ extravagantly generous, excessively open-handed.

ق

ق ا ع see ق ؤ ع : *qaaɛ, qaaɛa, ɢaaɛa*

ق ا ف

قاف *qaaf* /fem n, pl *-aat*/ twenty-first letter of the Arabic alphabet. ‖ *gabal qaaf* name of legendary mountain, said to lie at the end of the earth and to be the place upon which Adam descended after being expelled from the Garden.

قاف *ɢaaf: bi-yitkallim bil-ɢaaf [deris]* he speaks in a pompous way.

ق ا م see ق و م ¹ : *ɢaama*

ق ب ب

قبّ *ɢabb (i)* /vi/ **1** to rise, swell. *ʕik-karbunaatu yxalli l-keeka tɢibb* baking-soda makes the cake rise. **2** to bob up, surface. *xiṭis wi-ɢabb' bʕiid ɛanni* he dived and surfaced far from me. ‖ *ɢabb' bil-filuus* he came up with the money (i.e. having dived into his resources or pockets for it). - vn *ɢabb, ɢababaan*; ava *ɢaabib*.

قبّة *ɢabba'* /n pl *-aat, ɢabaabi↓*/ neck opening of a galabiya or *sideeri*.

قبّة *ɢubba* /n pl *ɢubab, ɢubbaat*/ **1** dome, cupola. ‖ *yiɛmil min il-ḥabba ɢubba [prov]* ≈ he makes a mountain out of a molehill. - *faakir ʕinn' taḥt il-ɢubba feex [prov]* (he is) under the impression that there is a buried saint under the dome (of one who is deceived by outward appearances). **2** roof of a mud oven (see Pl.C, 7).

قبّب *ɢabbib* /vt/ **1** to puff up, cause to swell. *ʕil-xabṭa ɢabbibit ɢurt-u* the blow made his forehead swell. *ʕif-fams' ɢabbibit gild-i* the sun blistered my skin. **2** to cause to rise, cause to surface. — /vi/ **3** to break out in blisters. - vn *taɢbiib*; ava/pva *miɢabbib*.

مقبّب *miɢabbib* /adj */ domed, convex.

اتقبّب *ʕitɢabbib* /vi/ passive of *ɢabbib* 1 and 2. - iva *mitɢabbib*.

ق ب ح

قباحة *ɢabaaḥa* /n/ **1** obscenity. *kalaam ɢabaaḥa [children]* dirty words. **2** rudeness.

قبيح *qabiiḥ* /adj/ ugly.

قبيح *ɢabiiḥ* /adj pl *ɢubaḥa, ɢubaaḥ*/ obscene (especially in language). *walad ɢabiiḥ* foul-mouthed kid. *film' ɢabiiḥ* blue movie.

قبايح *ɢabaayiḥ* /pl n/ dirty tricks, low acts.

أقبح *ʕaɢbaḥ* /el/ **1** more/most obscene or foul-mouthed. **2** more/most ugly.

قبّوح *ɢabbuuḥ: ɢabbuuḥ ya ɢabbuuḥ* ≈ what a crying shame! (the opening line of a folk song surviving only in a children's counting game).

قبّح *ɢabbaḥ* /vi/ to behave in an obscene or objectionable manner (especially by using bad language). - vn *taɢbiiḥ*; ava *miɢabbaḥ*.

اتقبّح *ʕitɢabbaḥ* /vi/ (impersonal) passive of *ɢabbaḥ*. *yaama tɢabbaḥ fiyya* how many times I was abused! - iva *mitɢabbaḥ*.

ق ب ر

قبر *ɢabar (u)* /vt/ to destroy, ruin (s.o. or s.o.'s career). *taɢriir il-mudiir ɢabar il-muwaẓẓaf bi-ḥirmaan-a mit-tarɢiyya* the manager's report has ruined the employee by depriving him of promotion. - vn *ɢabr*; ava *ɢaabir*; pva *maɢbuur*.

قبر *ɢabr* /n pl *ɢubuur*/ grave, tomb. ‖ *rigl-u wil-ɢabr* he is too old to live long. - *laha ɛeen baṣṣit-ha wil-ɢabr* ≈ she has an evil eye that is lethal.

مقبرة *maɢbara* /n pl *maɢaabir*/ **1** grave. ‖ *baɛd' ma raaḥ il-maɢbara baɢa fii sukkara [prov]* ≈ he was praised only after death (of one who, when alive, suffered from people's ingratitude). **2** /also pl *maqaabir*/ graveyard.

اتقبر *ʕitɢabar* /vi/ to be entombed. *ʕahu tɢabar allaah la*

yirḥam-u ≈ now he's buried may God have no mercy on him! - iva *mitqibir*.

انقبر *ʔinqabar* = *ʔitqabar*. - iva *minqibir*.

ق ب ر ص

قبرص *qubruṣ* /prop n/ Cyprus.

قبرصى *qubruṣi* /pl *qabarṣa*/ **1** /adj/ pertaining to Cyprus. ‖*ḥumaar qubruṣi* breed of tall black donkey. **2** /n/ a Cypriot.

ق ب ص

قبّص *qabbaṣ* **1** /vt/ to knead (dough). **2** /vi/ *[coarse]* to masturbate, jerk off. - vn *taqbiiṣ*; ava/pva *miqabbaṣ*.

اتقبّص *ʔitqabbaṣ* /vi/ to be kneaded (of dough). - iva *mitqabbaṣ*.

ق ب ض

قبض *qabaḍ (a)* /vt/ **1** to cash, convert into cash. *qabaḍt*^{i} *fiik* I cashed a cheque. *qabaḍ il-murattab* he cashed his salary. **2** to receive payment, get paid. *bi-yiqbaḍ mil-murattab talatiin gineeh* he receives thirty pounds in salary. *ḥ-araggaʕ-lak il-filuus lamma ʔaqbaḍ* I'll return the money to you when I'm paid. **3** to depress (emotionally). *ʔil-manẓar da ḥaqiiqi qabaḍ-ni* that sight really depressed me. *qalb-i maqbuuḍ* or *nifs-i maqbuuḍa* I'm depressed. — /vi/ **4a** to take hold. *qabaḍ fiyya* he seized me. ‖*nafas-i maqbuuḍ* I can hardly breathe. **4b** to make an arrest. *lamma qabaḍu ʕalayya ʔiʕtaraft*^{i} *quddaam il-buliṣ* when they arrested me I confessed before the police. - vn *qabḍ, qabaḍaan*; ava *qaabiḍ*; pva *maqbuuḍ*.

قبضة *qabḍa* /n pl *-aat, qubaḍ*/ **1** linear measure equal to 12.5 centimetres. **2a** fist. ‖*qabḍit ḥadiid* knuckle-duster. - *qabḍit baab* door knocker. **2b** hilt, handle. **2c** crosspiece forming the grip on the upright handle of a plough (see Pl.D, 17). — /no pl/ **3** depression.

قبضيّة *qabḍiyya* /n pl *-aat*/ cash payment (of salary or wages).

مقبوض *maqbuuḍ* /n/ down payment.

مقبض *maqbaḍ* /n pl *maqaabiḍ*/ handle. *maqbaḍ il-baab* door knob.

مقبض *muqbiḍ* /adj */ depressing, oppressive. *ma-qdirt*^{i}*-ʃ ʔastaḥmil il-gaww il-muqbiḍ da* I couldn't bear that heavy atmosphere.

اتقبض *ʔitqabaḍ* /vi/ **1** to be cashed, be converted into cash. **2a** to be gripped, be seized. *ʔitqabaḍt*^{i} *min kitf-i* I was seized by the shoulder. **2b** to seize up, contract. *ʔir-raḥim itqabaḍ* the uterus contracted. **2c** (impersonal) passive of *qabaḍ* 3b. *ʔitqabaḍ ʕal-ḥaraami* the thief was caught. **3** to become depressed. *ʔitqabaḍna min il-film* we were depressed by the film. - ava/iva *mitqibiḍ*.

انقبض *ʔinqabaḍ* = *ʔitqabaḍ*. - vn *ʔinqibaaḍ*; ava/iva *minqibiḍ*.

قبّض *qabbaḍ* /vt/ to hand over (money due) to. *ḥ-aqabbaḍ-ak bukra* I'll pay you tomorrow. *ʔiṣ-ṣarraaf ma-rḍii-ʃ yiqabbaḍ-ni* the cashier wouldn't give me my money. - vn *taqbiiḍ*; ava/pva *miqabbaḍ*.

اتقبّض *ʔitqabbaḍ* /vi/ to be paid. - iva *mitqabbaḍ*.

متقبّض *mitqabbaḍ* /n/ **1** down payment. **2** *ʔil-mitqabbaḍ* the first part of the marriage settlement (the second being payable in the event of divorce or of the death of the husband).

ق ب ط

قبطى *qibṭi* /pl *ʔaqbaaṭ, qabaṭ, qibaṭ*/ **1** /adj/ Coptic. **2** /n/ **2a** a Copt. **2b** /no pl/ the Coptic language.

ق ب ط ا ن

قبطان *qubṭaan, qabṭaan* <It *capitano*> /n pl *qabaṭna*/ ship's captain.

ق ب ق ب [1]

قبقاب *qubqaab* /n pl *qabaqiib*/ **1** pair of pattens, pair of wooden-soled sandals (see Pl.F, 19). ‖*qubqaab bi-ʕagal* pair of roller-skates. **2** *[auto]* tilting blocks for a car.

قباقيبى *qabaqiibi* /adj invar/ pertaining to *qabaqiib*, clog-like. ‖*musmaar qabaqiibi [carp]* tack.

ق ب ق ب [2]

قبقب *qabqib, qabqab* **1** /vt/ to cause to swell or blister. *ʔeeh illi qabqib ʃafayf-ak kida* what gave you these blisters on your lips? **2** /vi/ to become puffy, swell. *ʕeef miqabqib* light puffy bread. - vn *qabqaba*; ava/pva *miqabqib, miqabqab*.

ق ب ل [1]

قبل *qibil, qabal*^{I} *(a)* /vt/ **1a** to accept. *ʔik-kulliyya qiblit-ni* the college accepted me. *ma-b-aqbal-ʃ*^{i} *rafwa* I don't take bribes. *ʔin-nabi qibil il-hadiyya* the Prophet accepted gifts! (in urging acceptance of s.th.). **1b** to find acceptable. *ʔil-makana di ma-b-tiqbal-ʃ*^{i} *banziin* this machine won't take petrol. *ʔir-raagil da m-aqbal-uu-ʃ xaaliṣ* I can't stand that man! ‖*ḥaaga tiqbal-ha l-ʕeen* something pleasing to the eye. — /vi/ **2** to be accepted, be admitted. *qibil fi-kulliyyit iṭ-ṭibb* he was admitted to the faculty of medicine. **3** /preverb/ to find it acceptable to, be willing to. *ma-qiblit-ʃ*^{i} *titgawwiz-u* she wasn't willing to marry him. - vn

ɋabalaan, ɋubuul, ɋabuul; ava *ɋaabil, ɋablaan*; pva *maɋbuul*.

¶ *ɋaabil* (or *ɋaabil) li-↑* capable of, susceptible to, as in *ɋaabil lil-iftiʕaal* combustible, *raagil ɋaabil lil-iɋtinaaʕ* a man who can be convinced, *ʃil-iqtiraaḥ ɋaabil lit-tanfiiz* the suggestion is practicable.

قبول *ɋubuul, ɋabuul, ɋubuul, ɋabuul* /n/ assent, approval, acceptance. ‖*(ʃimtiḥaan) il-ɋubuul* elementary school certificate.

قابليّة *ɋaabiliyya* /n/ **1** inclination. *ma-lii-ʃ ɋaabiliyya lil-ʃakl* I don't feel like eating. *ma-luu-ʃ ɋaabiliyya yitkallim fil-mawɋuuʕ da* he doesn't feel like talking about that. **2** susceptibility. *ʕandu ɋaabiliyya lil-bard* he is susceptible to colds. **3** capability. *ma-luu-ʃ ɋaabiliyya lit-tafaahum* he's incapable of being reasoned with.

مقبول *maɋbuul* /n/ *[acad]* the university grade Satisfactory (the lowest pass grade).

قبيلة *ɋabiila* /n pl *ɋabaayil*/ tribe.

اتقبل *ʃitɋabal* /vi/ to be accepted. *ʃitɋabal fil-mustaffa* he was admitted to the hospital. - iva *mitɋibil*.

انقبل *ʃinɋabal* = *ʃitɋabal*. - iva *minɋibil*.

قبّل *ɋabbil'* /vt/ to cause to be accepted. *daragaat-i ɋabbilit-ni fil-ḫuɋuuɋ* my grades secured me a place in the (faculty of) law. - ava/pva *miɋabbil*.

اتقبّل *ʃitɋabbil* /vt/ to accept, receive. *rabb-i-na yitɋabbil iṣ-ṣala* God hears (our) prayers. *ʃitɋabbilna l-ʕaza* we received condolences. *ma-b-titɋabbil-ʃ' kalaam-i* she doesn't accept my advice. - ava *mitɋabbil*.

ق ب ل [2]

قبل *ɋabl* (also *ɋabl' min*) /prep; w foll pron suff also *ɋablii-* (1st sing *ɋabliyya*)/ before. *miin kaan saakin hina ɋablina* who was living here before us? *ga ɋabliiha b-yoom* he arrived a day before her. *ʃitʕayyin ɋabl' minni b-xamas siniin* he was appointed five years before me. ‖*la ɋabli wala baʕdi* ≈ my like has not been seen before nor will it be seen again! as in *ʃiftara ʕarabiyya bi-tɋuul la ɋabli wala baʕdi* he bought a car the like of which has never been seen. - *ʃin-nahar-da ɋabl' bukra* the sooner the better.

¶ *ɋabl' ma* /conj/ before. *bi-yaakul kitiir ɋabl' ma ynaam* he eats heavily before going to sleep.

قبلين *ɋableen: la baʕdeen wala ɋableen* retort used as a response to *baʕdeen* (q.v.) ≈ never mind about later! *ḫa-taaxud ʃugrit-ak baʕdeen. - la baʕdeen wala ɋableen ʃana ʕayiz-ha dilwaɋti* 'You will get your wages later.' 'Never mind later, I want them now!' *taʕaala zur-na baʕdeen ʃiḫna maʃɣuliin dilwaɋti. - la baʕdeen wala ɋableen ʕumr-ak ma-ḫa-tʃuf-ni ʕandak* 'Come and visit us some other time, we are busy now.' 'There won't be any other time; you'll never see me at your place!' ‖*wi-baʕdeen. - wala ɋableen* 'Whatever next!' 'Don't make such a fuss - it's nothing to get excited about.'

قبل *ɋabla* /adv/ before, first. *ʃana gayya bass[a] ʕawza ʃafuut ʕala ʃumm-i ɋabla* I'm coming, but I want to drop by my mother's first. *kallim-u ɋabla* speak to him first!

قبليّة *ɋabliyya* = *ɋabla*.

قبلة *ɋibla* /n/ *[Isl]* **1** direction towards which Muslims face in prayer. (i.e. the direction of the Kaaba in Mecca). **2** niche in the wall of a mosque indicating the direction for praying.

قبلي *ɋibli* **1** /adj/ southern. *baab ɋibli* southern door. ‖*ʃil-wagh il-ɋibli* Upper Egypt. **2** /prep/ to the south of, in the south of. *ʃil-madrasa ɋibli l-balad* the school is in the southern part of town. **3** /adv/ south(ward). *ʃir-riiḥ bi-thibb' min ɋibli* the wind is blowing from the south.

قبل *ɋabal[2]* = *ɋubaal*.

قبال *ɋubaal* /prep/ **1** facing, opposite. *balakonit-hum ɋubaal balakonit-na* their balcony faces ours. **2** in return for, in exchange for. *xud ik-kitaab da ɋubaal illi xadt-u minnak ʃimbaariḥ* take this book in return for the one I took from you yesterday.

قبّل *ɋabbil[2]* /vi/ to go south, go in a southern direction. - ava *miɋabbil*.

قابل *ɋaabil* /vt/ **1** to meet (s.o.) at an expected place or time. *ma-ḥadd'-ʃ ɋabil-ni fil-maṭaar* no one met me at the airport. ‖*ʃibɋa ɋabil-ni law ...* ≈ come and have a laugh at my expense if ..., as in *ʃibɋu ɋabluu-ni law kaan fii ʕaʃa* it's a sure bet there'll be no supper! *ʃibɋa ɋabil-ni law gawwizt-a-ha* I'll eat my hat if you (manage to) marry her off! **2a** to encounter, come across. *ma-ɋabilt'-ʃ zayyak kitiir fi-ḥayaat-i* I haven't come across many like you in my lifetime. **2b** to make the acquaintance of. *ɋabilt-a-ha w-ʃana lissa ṭaalib* I met her while I was still a student. **3** to meet, welcome, greet. *ɋabluu-na muɋabla kwayyisa* they received us well. **4** to correspond with. *ʃil-fuul ʕand il-maṣriyyiin yiɋaabil il-makaroona ʕand iṭ-ṭalayna* broad beans are to the Egyptians what pasta is to the Italians. ‖*fi-muɋaabil* in return for, as in *xadt' saʕt-u f-muɋaabil saʕt-i* I took his watch in return for mine. - *bi-duun* (or *min ɣeer) muɋaabil* without compensation, gratis. - vn *muɋabla*; ava *muɋaabil, miɋaabil*.

مقابلة *muɋabla* /n pl -*aat*/ meeting, encounter.

اتقابل *ʃitɋaabil* /vi/ **1** to meet together. *ḫa-nitɋaabil fi-bariis in ʃaaʃ allaah* we'll get together in Paris, God willing. **2a** to encounter one another. *ʃitɋabilna fif-*

ʃaariʒ we ran into each other in the street. **2b** to make one another's acquaintance. *ʔitqablu ʃayyaam il-ħarb* they met during the war. **3** passive of *qaabil*. - ava/iva *mitqaabil*.

أقبل *ʔaqbal*↑ /vi/ to respond with enthusiasm. *gumhuur kitiir ʔaqbal ɛal-film*ⁱ the film was very popular. - vn *ʔiqbaal*; ava *muqbil*.

مقتبل *muqtabal: fi-muqtabal* ... in the early stages of .... *fi-muqtabal il-ɛumr* in (one's) youth.

استقبل *ʔistaqbil* /vt/ **1** to receive. *ħaflit istiqbaal is-safiir* the reception for the ambassador. *ʔinfataħit il-ʔabwaab l-istiqbaal il-ɛariis* the doors were opened to receive the groom. *ʔir-radyu b-yistaqbil maħaṭṭaat biɛiida* the radio picks up distant stations. **2** *[naut]* to anchor. *ʔistaqbilu l-markib fil-xaliig* they anchored the ship in the bay. — /vi/ **3** *[naut]* to be anchored. - vn *ʔistiqbaal*; ava *mustaqbil*; ava/pva *mistaqbil*.

¶ *ʔistaqbil il-qibla [Isl]* to face in the direction of Mecca for the purpose of ritual prayer.

استقبال *ʔistiqbaal* /n pl *-aat*/ reception lobby, reception area, reception desk.

مستقبل *mustaqbal, mustaqbil*↓ /n/ **1** future. *ʔil-mustaqbal bi-yadd illaah [prov]* the future is in God's hands, God alone knows the future. **2** (future) career. *ʔil-qumaar ḍayyaɛ-lu mustaqbal-u* gambling lost (him) his career, gambling ruined him.

ق ب ن .

قبانة *qibaana* /n/ **1a** weighing (with a steelyard). **1b** profession of weighing (with a steelyard). **2** fee for weighing (with a steelyard).

قبّاني *qabbaani* /n pl *-yya*/ one who weighs with a steelyard. *mizaan qabbaani* a steelyard.

قبّن *qabbin* /vt/ **1** to weigh with a steelyard. — /vi/ **2** to become a professional steelyard weighing man. **3** to tip. *tuql il-buḍaaɛa xalla l-ɛarabiyya qabbinit li-wara* the weight of the goods made the cart tip backwards. *ʔil-mizaan qabbin* the scale tipped. - vn *taqbiin*; ava *miqabbin*.

اتقبّن *ʔitqabbin* /vi/ to be weighed with a steelyard. - iva *mitqabbin*.

ق ب و

قبو *qabw* /n/ vault, cellar, tunnel.

قبوة *qabwa* /n pl *-aat, qibaw*/ **1** vault, inside of a dome. **2** arcade.

قبّى *qabba*² /vt/ to make concave. - vn *taqbiyya*; ava/pva *miqabbi*.

اتقبّى *ʔitqabba* /vi/ to be made concave. - iva *mitqabbi*.

استقبّى *ʔistiqabba*↓ **1** /vt/ to make concave. **2** /vi/ to become concave. - ava/pva *mistiqabbi*.

ق ب ى see ق ب و : *qabba*², *ʔitqabba, ʔistiqabba*↓

ق ت ب

قتب *qatab* /n pl *ʔiqtaab*/ hump (on the back). *ʔabu qatab* hunchback.

قتّب *qattib* **1** /vt/ to cause to be hunched. *kaan qaaɛid miqattib ḍahr-u* he was sitting with his back hunched. **2** /vi/ to become hunched. *qattibit min kutr il-muzakra* she became hunched from so much studying. - vn *taqtiib*; ava/pva *miqattib*.

اتقتّب *ʔitqattib* /vi/ to be or become hunched or bowed. *ḍahr-u tqattib min tuql if-feela* his back was bent from the weight of the load. - also *qootab*. - ava/iva *mitqattib*.

ق ت ت ¹

قتّت *qattit* /vi/ to be niggardly, be stingy. *bi-yqattit ɛala ɛyaal-u maɛa ʔinnu ɣani* although he is rich, he is stingy towards his children. - vn *taqtiit*; ava *miqattit*.

ق ت ت ² see ق ت ى : *qatta, qattaaya*

ق ت ر

قتّر *qattar* /vi/ to be stingy. *ɣani wi-mqattar ħatta ɛala rooḥ-u* he is rich but tight-fisted even toward himself. - vn *taqtiir*; ava *miqattar*.

اتقتّر *ʔitqattar* /vi/ (impersonal) passive of *qattar*. *ħatta l-xaddamiin ṭafaṭu min kutrⁱ ma tqattar ɛaleehum* even the servants have left because they were given such stingy treatment. - iva *mitqattar*.

ق ت ل

قتل *qatal (i)* **1** /vt/ to kill, murder. *ɛawziin ħaaga ɛaʃaan qatl il-ħaʃaraat* we want something to kill the insects. ‖*ma-fii-ʃ ɣeer-ik ħaddⁱ qatal-ni - win-nabi tirħami* it's you alone who have slain me; - I implore you, have mercy! (flirtatious remark to a girl). **2** /vi/ to commit murder. *ħabasuu ɛaʃaan qatal* he was imprisoned for murder. *qatlⁱ xaṭaʔ* or *qatlⁱ min ɣeer qaṣd [leg]* manslaughter. *qatlᵃ ɛamdⁱ maɛa sabq il-ʔiṣraar [leg]* premeditated murder. - vn *qatl*; ava *qaatil*; pva *maqtuul*.

قتلة *qatla* /n pl *-aat*/ **1** /inst n/ a killing. ‖*qatla w-ʃibra* type of children's marble game. **2** brawl.

قاتل *qaatilˡ* /n pl *qatala*/ killer, murderer.

قتيل *qatiil* /n pl *qutala*/ one killed. ‖*naam zayy il-qatiil* he slept like a log. *- yiqtil il-qatiil wi-yimʃi f-ganazt-u [prov]* he murders the victim and (then) walks in his funeral procession (applied to a ruthless person).

قتّال *qattaal: qattaal qutala* a hardened murderer.
مقتل *maqtal* /n pl *maqaatil*/ mortal spot, vulnerable spot. *ʃinqarab fi-maqtal* he was fatally wounded.
اتقتل *ʃitqatal* /vi/ to be killed, be murdered. - iva *mitqitil*.
انقتل *ʃinqatal* = *ʃitqatal*. - iva *minqitil*.
قتل *qattil* /vt/ to kill (in numbers). *bi-yqattilu (fi)k-kilaab is-saɛraana* they're killing off rabid dogs. - vn *taqtiil*; ava/pva *miqattil*.
اتقتّل *ʃitqattil* /vi/ to be killed (in numbers). - iva *mitqattil*.
قاتل *qaatil*[2] /vt/ to fight against, engage in a struggle with. *ɛammaal yiqaatil (f)in-noom* he keeps fighting against sleep. - vn *qitaal, miqatla*; ava *miqaatil*.
قتال *qitaal* /n/ fight, struggle. *midaan qitaal* a battlefield.
مقاتلة *muqatla* /n pl *-aat*/ fighter (plane).
مقاتل *muqaatil* /n */ *[mil]* private soldier.
اتقاتل *ʃitqaatil* /vi/ to fight, do battle. *ʃin-naas bi-yitqatlu ɛal-bidaaɛa* the people are fighting over the goods. - ava *mitqaatil*.
استقتل *ʃistaqtil* /vi/ to fight desperately. *bi-yistaqtilu leel wi-nhaar ɛafaan luqmit il-ɛeef* they strive desperately day and night for a livelihood. - vn *ʃistiqtaal*; ava *mistaqtil*.

ق ت م
قاتم *qaatim* /adj/ dark (of colour).
قتّم *qattim* **1** /vt/ to darken, blacken. *ʃif-fams' qattimit wiff-u* the sun tanned his face. **2** /vi/ to become dark. *wiff-u qattim miz-zaɛal* his face darkened with fury. - vn *taqtiim*; ava *miqattim*.

ق ت ى
قتّة، قثاء *qatta* /coll n/ variety of long cucumber (Cucumis sativus). ‖*bi-yaakul fi-qatta maħluula* ≈ he has an easy life.
قتّاية *qattaaya* /unit n, pl *-aat*/ a cucumber of the *qatta* variety.
مقاتة *maqaata* /n pl *-aat*/ melon and cucumber plantation. ‖*xayaal il-maqaata* scarecrow.

ق ث ء see ق ت ى

ق ح ب
قحبة *qaħba* /n pl *qaħaayib*/ whore, harlot. *ya-bn il-qaħba* son of a whore!

ق ح ح
قحّ *quħħ* /adj invar/ through and through, one hundred percent. *fallaaħ quħħ* a peasant through and through. *ħumaar quħħ* a complete idiot.

ق ح ط
قحّط *qaħħaṭ* **1** /vt/ to scrape, strip. *qaħħaṭ il-buuya min ɛaṭ-ṭarabeeza* scrape the paint off the table! *ʃil-qumaar qaħħaṭ-u* gambling cleaned him out, gambling made him penniless. **2** /vi/ to dry up, become parched. *zoor-i qaħħaṭ miṣ-ṣiyaam* my throat became parched from fasting. ‖*ʃana qaħħaṭt' mil-filuus* I became penniless. - vn *taqħiiṭ*; ava/pva *miqaħħaṭ*.
اتقحّط *ʃitqaħħaṭ* /vi/ to be scraped, be stripped. - iva *mitqaħħaṭ*.

ق ح ف
قحف *qaħf* /n pl *quħuuf, quħúfa*/ **1** broad part of a palm branch (where it joins the trunk). **2** (strong) brute.

ق د
قد *qad*↑ /adj/ **1** (also *laqad*) /w foll perf v/ already. **2** /w foll imperf v/ perhaps.

ق د ح [1]
قدح *qadaħ*[1] *(a)* /vt/ **1** to heat to the required temperature. *qadaħit il-furn* she heated the oven to baking temperature. *laazim tiqdaħi s-samn* you must heat the clarified butter to smoking point (i.e. ready for frying). **2** to strike (a light) with flint or steel. ‖*qadaħ-ni qalam* he gave me a slap (that made the sparks fly). **3** to throw, cast. — /vi/ **4** to reach the required temperature. *ʃil-furn' qadaħ* the oven is hot and ready for baking. - vn *qadħ, qadaħaan, qadiiħ*; ava *qaadiħ*; pva *maqduuħ*.
قدحة *qadħa* /inst n, pl *-aat*/ **1** a heating. **2** (physical) affliction. *gat-(ak) qadħa f-gittit-(ak) [abus]* may (your) body be afflicted!
أقدح *ʔaqdaħ* /el/ more/most striking. *ħiyya ʔaqdaħ min ʃuxt-a-ha fig-gamaal* she's more strikingly beautiful than her sister.
اتقدح *ʃitqadaħ* /vi/ to be or become heated to the required temperature. *ʃiz-zeet itqadaħ* the oil has reached smoking point (i.e. it is ready for frying). - ava/iva *mitqidiħ*.
انقدح *ʃinqadaħ* = *ʃitqadaħ*. - ava/iva *minqidiħ*.

ق د ح [2]
قدح *qadaħ*[2] /n pl *ʔaqdaaħ, qidaaħ*/ dry measure equal to 2.062 litres. *ma-yiksar-ʃ it-taħuuna illa ʃabu qadaħ [prov]* (it's the man with only a small quantity to grind who breaks the mill) poverty and bad luck go hand in hand.

ق د د ¹

قدّ *ʔadd¹ (u)* /vt/ to split. *ḍarab-u ḍarba ʔadd-u nuṣṣeen* he gave it a blow and split it in two. - vn *ʔadd, ʔadadaan*; ava *ʔaadid*; pva *maʔduud*.

قدّ *ʔadd²* /n/ **1** size. *ya reet-u ʕala ʔadd-i* I wish it were my size. *ʔaadir yifiil ʃarbaʕa ʔadd-i* he can carry four people the size of me. **2** extent, amount. *ḥa-tviib ʔadd¹ ʃeeh* how long will you be away? *ʔadd¹ kida* this much (big, long etc.). *ʔiwwit ig-geef ʕala ʔadd¹ ʃimaan if-ʃaʕb* the power of the army is commensurate with the faith of the people. *ʔadd¹ ʃeeh is-sitt¹ di gamiila* how beautiful that woman is! *ʔadd¹ baʕḍ¹ fil-irtifaaʕ* of equal height. ‖ *miʃ ʔadd¹ kida* not good, pretty bad, as in *riḥit-ha miʃ ʔadd¹ kida* she doesn't smell very nice. - *ʔadd id-dinya* a world's worth, as in *b-aḥibb-u ʔadd id-dinya* I love him enormously! *ʕandik fasatiin ʔadd id-dinya* you have masses of dresses! *taagir ʔadd id-dinya* a thriving merchant, *raagil ʔadd id-dinya* a man of inestimable worth, a superior man. **3** calibre, capacity. *ʃinta miʃ ʔadd-i* you're no match for me. *huwwa-nta ʔadd-i-na* do you really imagine you're in the same league as us? ‖ *ʃana muʃ ʔadd il-fustaan* I can't afford the dress. - *ʕala ʔadd-(u)* of little worth or capacity, as in *xaṭṭaaṭ ʕala ʔadd-u* a mediocre calligrapher, *naẓar-u ʕala ʔadd-u* his vision is limited, *maṣruuf-u ʕala ʔadd-u* he has little to spend, *ʕaʔl-u ʕala ʔadd-u* he's not very bright, *kalaam-u ʕala ʔadd-u* he speaks naively, *raagil ʕala ʔadd-u* or *raagil ʕala ʔadd¹ ḥaal-u* a poor man. ¶ *(ʕala) ʔadd¹ ma* /conj/ (1) as much as. *bi-yidfaʕ ʕala ʔadd¹ ma yiʔdar* he pays what he can. *ʔumaaʃ ʔadd¹ ma yiʕmil ʔamiiṣ* enough material to make a shirt. (2) however much. *ʕala ʔadd¹ ma ʃasallim ʕalee barḍu miʃ ʕaawiz yiʕabbar-ni* however often I greet him he still doesn't want to pay me any attention.

قدّة *ʔadda* /n pl *-aat*/ **1** instance noun of *ʔadd*. **2** strip of material used in appliqué designs (see Pl.H, 15).

قدّة *ʔidda* /n pl *-aat, ʔidad*/ levelling board (for mortar).

قدود *ʔuduud: ʔadd¹* (or *ʔadd-...*) *wi-ʔuduud* the match of ... and more. *da-na ʔadd-ak wi-ʔuduud* I'm your equal and more!

اتقدّ *ʃitʔadd* /vi/ to be split. - iva *mitʔadd*.

انقدّ *ʃinʔadd* = *ʃitʔadd*. - iva *minʔadd*.

ق د د ²

قدّد *ʔaddid* **1** /vt/ to dry by heat. *xud il-ʕeeʃ ʔaddid-u* take the bread and dry it. **2** /vi/ to dry up. ‖ *mara mʔaddida* a skinny woman. - vn *taʔdiid*; ava/pva *miʔaddid*.

اتقدّد *ʃitʔaddid* /vi/ to be dried by heat. - iva *mitʔaddid*.

ق د ر ¹

قدر *ʔidir (a)* /vi/ **1** /preverb/ to be able to, be capable of. *ma-ʔdirnaa-ʃ niigi* we were unable to come. *tiʔdar tiʔul-li gara-lhum ʃeeh* can you tell me what happened to them? *ḥadd¹ fiina yiʔdar yiftaḥ ḥanak-u* is anyone of us in a position to speak out? **2a** to be master, be in command. *ma-yiʔdar ʕala l-ʔudra ʃilla rabb-i-na [prov]* ≈ only God can do the impossible. *ma-yiʔdar-ʃ¹ ʕaleeha ʃayy¹ ḥadd* nobody could do it. *da b-yiʔdar ʕala k-kalaam bass* he's a man of words, not action. ‖ *ma-ʔdir-ʃ¹ ʕala l-ḥumaar ʃiʃʃaṭṭar ʕal-bardaʕa [prov]* he couldn't master the donkey so he took it out on the saddle. **2b** to bear, be able to bear. *m-aʔdar-ʃ¹ ʕala zaʕal-u* I can't bear his being cross! *tiʔdar ʕal-wagaʕ* can you stand the pain? - vn *ʔudra, ʔadaara*; ava *ʔaadir*; pva *maʔduur*.

قدارة *ʔadaara* /n/ impertinence, cheek. *ya ʔadart-ak* how cheeky you are!

قادر *ʔaadir* **1** /ava/ ‖ *rabb-i-na ʔaadir ʕala kull¹ ʃeeʃ* ≈ anything is possible in God's creation! **2** /n/ Almighty One, Omnipotent One (epithet of God). ‖ *bi-ʔudrit ʔaadir* ≈ for no rhyme or reason. - *ʃaayil ʕabd il-ʔaadir* ≈ he looks as though he's carrying the troubles of the whole world on his shoulders. — /adj */ **3** cheeky. **4** wealthy, of means. *ʃilli yitgawwiz itneen ya ʔaadir ya faagir [prov]* the man who marries two wives is either rich or debauched!

القادريّة *ʃil-ʔadriyya* /prop n/ Sufi order founded by Abd el-Qadir el-Gilani.

مقدور *maʔduur* **1** /pva/ ‖ *maʔduur ʕala* manageable, as in *da ḥaaga maʔduur ʕaleeha* this is something that can be managed. — /n/ **2** capacity, ability. *kull¹ waaḥid wi-maʔduur-u* each according to his means. *fi-maʔduur* ... within the capacity of, as in *fi-maʔduur-u yaakul toor li-waḥd-u* he's capable of eating an ox on his own. **3** *ʃil-maʔduur* what is fated, what is destined.

المقادير *ʃil-maʔadiir, ʃil-maʔadiir* /pl n/ Fate, the Fates. *ʔaliil it-tadbiir yiḥiil ʕala l-maʔadiir [prov]* the disorganised man leaves matters to Fate.

قدر *ʔadr* /n/ **1** worth. *ʔadr-ak maḥfuuẓ* your worth is maintained. ‖ *bi-galaalit ʔadr-.. [deris]* ≈ in all (one's) shining glory, as in *huwwa lamma yiigi b-galaalit ʔadr-u ḥa-yxawwif-na* ≈ does his lordship imagine he'll scare us when he arrives? **2**: *leelit il-ʔadr [Isl]* a night in Ramadan on which, it is believed, a light *(ṭaaʔit il-ʔadr)* appears to a chosen few, who thereby acquire fulfilment of a wish. *ṭaaʔit il-ʔadr infataḥit-lak* ≈ the world is at your feet, you have a bright future!

قدرة *ʔudra* /n pl *-aat*/ capacity, capability. *ʕandaha*

ʔudra timʃi masafaat ʧiwiila she is capable of walking long distances. *ʕala ħasab ʔudrit-ha lil-ħarb* according to its fighting capacity. *bi-ʔudrit illaah* by the power of God.

قدر *ʔadar, qadar* /n pl *ʔaʔdaar, ʔaqdaar*/ Fate, Destiny. ‖*saaʕit il-ʔadar yiʕma l-baṣar [prov]* (when it is time for Fate (to be realized), (one's) sight is blinded) no amount of wisdom can help one escape one's fate.

قدير *ʔadiir, qadiir*↑ **1** /n/ Almighty One, Omnipotent One (epithet of God). **2** /adj/ having mastery, capable.

مقدرة *maʔdira, maʔdara* /n/ financial capability. *ma-ʕanduu-ʃ maʔdara yiftiri laħma* he can't afford to buy meat.

مقدار *muʔdaar, miʔdaar* /n/ **1** /pl *maʔadiir*/ quantity, amount. *bi-yistahlik miʔdaar kibiir min il-banziin* it consumes a large quantity of petrol. *yikuun biʕiid ʕan il-ʕarḍ' b-muʔdaar xamastaaʃar santi* it is fifteen centimetres above ground. **2** /no pl/ worth, value. *yiʕizz' muʔdaar-ak [women in trad soc]* response to *xaṭwa ʕaziiza* (q.v.) ≈ may your worth be increased.

اتقدر *ʔitʔadar* /vi/ (impersonal) passive of *ʔadar* 2. *kull-u yitʔidir ʕalee ʔilla l-ʕaṭaʃ* everything is bearable except thirst. -iva *mitʔidir*.

انقدر *ʔinʔadar* = *ʔitʔadar*. -iva *minʔidir*.

قدّر *ʔaddar* /vt/ **1** to (pre)destine (of God). *kull-u mʔaddar* everything is fore-ordained. ‖*ʔaddar wi-laṭaf* ≈ it could have been worse. **2** to enable (of God). *rabb-i-na bi-yʔaddar-na ʕaʃ-ʃuɤl* God enables us to do our work. *rabb-i-na yʔaddar-ni ʕala xidmit-ak* may God enable me to serve you (deferential expression of one's willingness to be of service). **3a** to appraise, estimate. *ʔawarrii-k il-ʕarabiyya wi-nta tʔaddar it-taman* I'll show you the car and you make an estimate of the price. *ʔaddart' ʔinnu mumkin yikuun zaʕlaan min il-ħikaaya di* I reckoned he might be upset by this matter. **3b** to appreciate, esteem. *fii zabaayin bi-tʔaddar il-ħaaga l-ħilwa* there are customers who appreciate nice things. *ma-bi-yʔaddar-nii-ʃ* he doesn't value me (as he should). -vn *taʔdiir*; ava/pva *miʔaddar*; pva *muʔaddar*.

¶ *ʔaddar ʔinn* ... suppose that ..., what if ..., as in *ʔaddar ʔinn' naas ħaramiyya ʧilʕu ʕalee* what if thieves had attacked him? *ʔaddari ʔinn' ma-lkii-ʃ ʔixwaat* suppose that you didn't have any brothers or sisters.

تقدير *taʔdiir* /n pl *-aat*/ **1** appraisal, estimate. *ʕala ʔaʔall' taʔdiir* at lowest estimate. **2** *[acad]* grading, ranking (of achievement). *xadt' taʔdiir gayyid fil-imtiħaan* I got a ranking of Good in the exam.

تقديرى *taʔdiiri* /adj/ **1** pertaining to individual estimations, relative. *masaaʔil taʔdiriyya* matters of (personal) judgement. **2** approximate. *ʔasʕaar taʔdiriyya* approximate prices.

مقدّر *miʔaddar, muʔaddar* /n pl *-aat*/ destiny.

اتقدّر *ʔitʔaddar* /vi/ **1** to be appraised, be estimated. *farħit-i biiku ma-titʔaddar-ʃ* my joy in you cannot be estimated. **2** to be appreciated, be esteemed. -iva *mitʔaddar*.

مقتدر *muʔtadir* **1** /adj */ financially capable. *ʔinta muʔtadir wi-tiʔdar tifaṣṣal badla* you can well afford to have a suit of clothes made. **2** (also *muqtadir*) /n/ Omnipotent One (epithet of God).

ق د ر [2]

قدرة *ʔidra* /pl *ʔidar*/ urn-shaped metal or earthenware vessel (see Pl.A, 5).

ق د س [1]

قدس *ʔuds, quds* /n/ *[Chr]* holiness. *ʔuds il-ʔiʔdaas* or *ʔuds il-ʔaʔdaas* or *quds il-ʔaqdaas* the holy of holies. ‖*ʔuds-ak* form of address to Coptic clergy. -*ʔuds abuuna* formal term of address or reference to a Coptic priest.

القدس *ʔil-ʔuds, ʔil-quds* /prop n/ Jerusalem.

قدسى *ʔudsi, qudsi* /adj/ *[Isl]* sacred, divine (especially of Muslim tradition in which God himself speaks).

قدسيّة *ʔudsiyya*↑ /n/ holiness, sacredness. *ʔudsiyyit il-makaan* the holiness of the place.

قدس *ʔudus* or *ʔudus: ʔir-rooħ il-ʔudus [Chr]* the Holy Spirit.

أقدس *ʔaʔdas* /el/ more/most holy.

قداسة *ʔadaasa* /n/ holiness. *ʔadaasit il-baaba* His Holiness the Pope. *ṣaaħib il-ʔadaasa* His Holiness.

قدّاس *ʔuddaas* /n pl *ʔadadiis, ʔuddasaat*/ *[Chr]* liturgy of the Mass, eucharistic liturgy.

قدّوس *ʔudduus* /n/ Most Holy One (epithet of God).

قدّيس *ʔaddiis, ʔiddiis, ʔiddiis* /n */ Christian saint.

أقداس *ʔiʔdaas, ʔaʔdaas, ʔaqdaas* see *ʔuds*.

قدّس *ʔaddis* /vi/ **1** *[Chr]* to make a pilgrimage to Jerusalem. **2** *[Chr]* to celebrate Mass, celebrate the Eucharist (of a priest). — /vt/ **3** to sanctify, bless. **4** to hold sacred, venerate. *bi-yʔaddis il-ħayaah ʉz-zawgiyya* he holds married life sacred. -vn *taʔdiis*; ava *miʔaddis*; pva *muʔaddas*.

مقدّس *miʔaddis* /n */ a Christian who has made a pilgrimage to Jerusalem.

مقدّس *muʔaddas* or *muqaddas*↑ /adj */ holy. *ʔil-ʕeela l-muʔaddasa* the Holy Family. *ʔik-kitaab il-muʔaddas* (or *il-muqaddas*) the Holy Bible. *ʔil-ʔarḍ il-muqaddasa* the Holy Land, Palestine.

اتقدّس ʔitqaddis /vi/ passive of *qaddis* 3 and 4. - iva *mitqaddis*.

ق د س [2] see ق د و س : *qaduus*

ق د ف [1]

قدف *qadaf[1] (i)* /vt/ to make (a stroke) in rowing. *qadaf qadfiteen wil-miqdaaf itkasar* he rowed two strokes and the oar broke. - vn *qadf*; ava *qaadif*.

قدفة *qadfa[1]* /inst n, pl *-aat*/ a stroke (in rowing).

مقداف *miqdaaf, muqdaaf* /n pl *maqadiif*/ oar. - also *migdaaf, mugdaaf*.

اتقدف ʔitqadaf[1] /vi/ to be rowed (of strokes). - iva *mitqidif*.

انقدف ʔinqadaf[1] = ʔitqadaf[1]. - iva *minqidif*.

قدّف *qaddif[1]* /vi/ to row. - vn *taqdiif*; ava *miqaddif*.

اتقدّف ʔitqaddif[1] /vi/ to be rowed, be propelled by oars (of a boat). - iva *mitqaddif*.

ق د ف [2]

قذف *qadaf[2] (i)* /vt/ to aim at, or strike by throwing. *qadaf-ha b-ħagar* he threw a stone at her. - vn *qadf, qadafaan*; ava *qaadif*; pva *maqduuf*.

قذف *qazaf (i)* /vt/ **1** to bombard. *qazf[i] bil-qanaabil* bombing. **2** to libel, defame. — /vi/ **3** to ejaculate, eject semen. - vn *qazf*; ava *qaazif*; pva *maqzuuf*.

قذفة *qadfa[2]* /inst n, pl *-aat*/ a throw.

قاذفة *qaazifa* /n pl *-aat*/ ejector. *qaazifit qanaabil* bomber. *qaazifit lahab* flame-thrower.

مقذوف *maqzuuf* /n pl *maqaziif*/ bullet.

قذيفة *qaziifa* /n pl *qazaayif*/ shell, bomb. *qaziifa yadawiyya* hand-grenade.

اتقذف ʔitqadaf[2] /vi/ passive of *qadaf*[2]. - iva *mitqidif*.

انقذف ʔinqadaf[2] = ʔitqadaf[2]. - iva *mitqidif*.

قذّف *qaddif[2]* /vt/ to pelt. *qaʕad yiqaddif-ni* (or *yiqaddif fiyya) b-ħigaara* he kept pelting me with stones. - vn *taqdiif*; ava/pva *miqaddif*.

اتقذّف ʔitqaddif[2] /vi/ to be pelted. - iva *mitqaddif*.

ق د م [1]

قدم *qidim, qudum (a)* /vi/ to become old. *lamma l-ʕarabiyya tiqdam* when the car gets old. *ʔin-nukta di qidmit* that has become an old joke. - vn *qudumiyya, qidam, qadamaan*.

قدميّة *qudumiyya* /n/ oldness, age.

قديم *qadiim, qadiim* /adj pl *qudaam, qudama, qudamaaʔ*/ old, ancient. *min qadiim iz-zamaan* from ancient times. *qudamaaʔ il-maṣriyyiin* the ancient Egyptians. ‖*gibna qadiima* sharp aged white cheese. - *ʔil-qadiima tiħla wa-law kaanit waħla [prov]* (the first wife is sweet even if she's a clod) ≈ the old shoe is more comfortable than the new. - *gaab il-qadiim ʕag-gidiid* to dredge up the past. - *qadiim fil-mihna* or *qadiim fiṣ-ṣanʕa* or *qadiim fik-kaar* experienced, of mature skill(s). - *maṣr il-qadiima* Old Cairo, the southernmost district of Cairo proper, situated on the eastern bank of the Nile at the site of the fortress and settlement conquered by the Arabs in 641.

أقدم ʔaqdam /el/ older/oldest.

أقدميّة ʔaqdamiyya /n pl *-aat*/ seniority.

استقدم ʔistaqdim /vt/ **1** to reject as (too) old. **2** to select for oldness. - vn *ʔistiqdaam*; ava *mistaqdim*.

ق د م [2]

قدم *qadam, qadam* /fem n, pl *ʔaqdaam*/ **1** foot. ‖*qadam-ak xeer ʕalayya* ≈ your arrival has brought me good fortune. - *ʔaqdaam wi-ʔaʕtaab (wi-nawaaṣi)* (feet and thresholds (and corners)) all a matter of luck, a toss-up. *ʔin-naas ʔaqdaam wi-ʔaʕtaab [prov]* some people bring good luck, some bring bad. **2** foot (linear measurement).

قدمة *qadama* /n pl *-aat*/ *[geom]* vernier caliper.

قدوم *quduum* /n/ coming, arrival. *quduum-ak xeer* (we consider) your arrival to be a good omen. *ṭawaaf il-quduum [Isl]* the greeting of the Kaaba (by circuiting it) on arrival in Mecca.

قدّام *quddaam* **1** /prep/ in front of. *ʔilli quddaamu fiṭ-ṭabuur* the one ahead of him in the queue. *quddaam ʕenee* before his very eyes. ‖ *ʔilli waraa wi-lli quddaamu* all his worldly goods. **2** /adv/ in front. *ʕarabiyya fiiha mutoor quddaam* a car which has the motor in front. *fiḍil yimfi l-quddaam* he continued moving forward. ‖*quddaami* in front of me ≈ get moving! get going!

قدّامانى *quddamaani* /adj */ front, frontal, foremost. *ʕagal quddamaani* front wheel. *misik kitf il-quddamaniyya* he grasped the shoulder of the girl (or woman) ahead of him.

قيدومة *qayduuma* /n/ *[naut]* prow.

مقدم *muqdim* /adj * and pl *maqaadim*/ smart-alecky.

قدّم *qaddim* /vt/ **1** to cause to advance, cause to move forward. *qaddimu maʕaad safar-hum* they moved up the date of their journey. **2a** to present, introduce. *kaatib il-muḥaami bi-yqaddim id-daʕwa lil-maḥkama* the lawyer's clerk presents the case to the court. *qaddim musawwayaat taʕyiin-u* he presented his credentials. **3a** to offer. *qaddim-lina ʃaay* he offered us tea. *mustaʕidd[i] yqaddim ḥayaat-u l-maṣr* he's prepared to offer his life for Egypt. **3b** to hand over, deliver. *qaddim il-filuus* he handed over the money. — /vi/ **4** to advance, move forward. *saʕt-i bi-tqaddim* my watch

gains time. *ramaḍaan kull' sana bi-yqaddim ḥawaali ḥdaafar yoom ɛan is-sana lli qabliiha* Ramadan comes about eleven days earlier every year. **5** to make haste. *qaddim - ʃiḥna mitʃaxxariin* hurry up! we're late! **6** to apply, make application. *miʃ kull' waaḥid yiqdar yiqaddim fil-ʃazhar* not everyone can apply to el-Azhar. - vn *taqdiim*; ava/pva *miqaddim*.

مقدّمة *muqaddima, muqaddima*↑ /n pl *-aat*/ **1** forefront, vanguard. *muqaddimit ig-geeʃ* the vanguard of the army. **2** introduction. *bi-duun muqaddimaat nizil fiina ʃtiima* ≈ without any warning he showered us with insults.

مقدّم *muqaddam* /n/ **1a** down payment, advance payment, initial payment of a larger sum which is due. **1b** part of the marriage settlement paid to the bride at the time of marriage. **2** front part, forepart. *muqaddam il-markib huwwa l-biriwwa* the forepart of the ship is the bow.

¶ *muqaddaman* /adv/ in advance, beforehand. *ʃid-dafɛ' muqaddaman* payment in advance. ‖*naɛiiman muqaddaman* complimentary remark made during the cutting of hair or during shaving ≈ may it make you feel good!

مقدّم *muqaddim, muqaddam* /n */ lieutenant-colonel.

اتقدّم *ʃitqaddim* /vi/ **1** passive of *qaddim*. **2** to progress, make progress. *ʃil-balad itqaddimit qawi* the country has made great progress. *ʃitqaddim fiṭ-ṭabuur* he moved up in the queue. **3** to present oneself, submit oneself. *kull' sana iṭ-ṭaalib b-yitqaddim lil-imtiḥaan* every year the student presents himself for examination. *ʃitqaddim-li ktiir rafaḍt-u-hum kull-u-hum* many (suitors) have presented themselves to me, (but) I've refused them all. - vn *taqaddum*; ava/pva *mitqaddim*.

متقدّم *mitqaddim* /n */ applicant.

ق د م[3] see ق د و م : *qaduum*

ق د و س

قادوس *qaduus* /n pl *qawadiis*/ **1** large funnel or cone which receives material for processing. *qaduus (iṭ-ṭaḥuuna)* (mill) hopper. **2** jar of a water-wheel (see Pl.E, 11). **3** bell-shaped pigeon-hole.

ق د و م

قدوم *qaduum* /n pl *qawadiim*/ mason's adze, hammer.

ق ذ ر see ق ز ر

ق ذ ف see ق د ف

ق ر ا ط

قيراط *qiraaṭ* /n pl *qarariiṭ*/ **1** approximate measure equal to a finger's width, about an inch. **2** dry measure equal to 0.064 litres. **3** square measure equal to 175.035 square metres. ‖*qiraaṭ baxt' wala faddaan faṭaara [prov]* ≈ better an inch of luck than a mile of cleverness. **4** carat, a unit of weight equal to 0.195 grammes. *ʃarbaɛa w-ɛifriin qiraaṭ* (twenty-four carat) expression indicating superlativeness ≈ top-notch, one hundred percent, as in *kunt' mabsuuṭ ʃarbaɛa w-ɛifriin qiraaṭ* I was totally happy.

ق ر ا ف

قرافة *qaraafa* /n pl *-aat*/ cemetery. *ʃil-qaraafa* large Muslim cemetery on the eastern edge of Cairo at the foot of the Muqattam hills, the site of many tombs of historical and artistic importance.

ق ر ء see ق ر ى[1]

ق ر ب[1]

قرب *qurub, qirib (a)* /vi/ **1** to become near. *qurb-ik naar* your nearness is (like) fire. *maṣr' qurbit* (Cairo has become near) we're almost at Cairo. **2** /imperf only/ to be a kinsman, be a relative. *huwwa yiqrab-li* he's a relative of mine. *bi-yiqrab-lak ʃeeh* how is he related to you? - vn *qurb, qaraaba*.

قرابة *qaraaba* **1** /vn/ *fii ṣilat qaraaba benhum* there is a bond of kinship between them. **2** /coll n, pl-*aat*/ kindred, relatives. *miʃ ḥa-yiɛrafuu-na - dool qarabaat biɛiida* they won't recognize us - they're distant relatives.

قرب *qurb* /prep/ **1** near, near to. *qaɛdiin qurb' baɛḍ* they are sitting near each other. *saakin qurb' min il-maktab* he lives near the office. **2** about. *qurb' saaɛa* almost an hour, nearly an hour.

قربان *qurbaan* /n/ *[Chr]* **1** /coll n/ small round loaves impressed with a stamp, either consecrated as communion bread or distributed among the congregation after the eucharistic liturgy. **2** /pl *qarabiin*/ offering.

قربانة *qurbaana* /n pl *-aat*/ unit noun of *qurbaan* 1.

قرابنى *qarabni* /n pl *-yya*/ *[Chr]* baker of *qurbaan*.

قريب *qariib* **1** /n pl *qaraayib*/ relative, kinsman. **2** = *qurayyib*. *fil-qariib il-ɛaagil* in the immediate future. *kull' ʃaatin qariib [prov]* everything (destined) to come is (relatively) imminent. *ʃid-duxxaan il-qariib yiɛmi [prov]* ≈ you can't see the wood for the trees.

قريبا *qariiban*↑ /adv/ soon, shortly.

قريّب *qurayyib* **1** /adj */ **1a** near, nearby. *ʃil-bilaad il-qurayyiba* the nearby towns. ‖ *ʃil-biḍaaɛa qrayyiba* the

goods are available. - *riḍaa ɢurayyib* he's easy to please. - *mihna ɢrayyiba* an easily-acquired skill. **1b** recent. *li-ɣaayit mudda ɢrayyiba* until recently. **2** /adv/ **2a** near, nearby. *saakin ɢurayyib* he lives nearby. **2b** soon. *ḫa-tiigi ɢrayyib* she'll be coming soon.

أقرب ʕaɢrab /el/ **1** nearer/nearest. **2** sooner/soonest.

قرّب ɢarrab /vi/ **1** to come near. *ɢarrabna ɛal-beet* we approached the house. *ɢarrab ɛalayya* he drew near to me. **2** /preverb/ to reach the point of (doing s.th.). *kaan ɢarrab yiṭallaɢ-ha* he almost divorced her. *kaanit ɢarrabit timuut* she came close to dying. *li-ɣaayit ma tɢarrab tinʃaf* until it has almost dried out. — /vt/ **3** to cause to come near. *ɢarrab-li l-mikrifoon* move the mike close to me! - vn *taɢriib*; ava *miɢarrab*.

تقريب *taɢriib* ‖*ɛala wagh it-taɢriib* and *bit-taɢriib* approximately.

¶ *taɢriiban* /adv/ approximately. *ʕil-yoom taɢriiban xiliṣ* the day is almost over.

تقريبى *taɢriibi* /adj */ approximate. *ʕarqaam taɢribiyya* approximate numbers.

مقرّب *muɢarrab, muqarrab*↑ /n */ close companion, favourite. *w-aadi waaḥid mil-muɢarrabiin li-galalt-u* here's one of His Majesty's favourites.

اتقرّب ʕitɢarrab /vi/ **1** to become close or closer (in a relationship). *ɢaɛad yitɢarrab laha li-ḥadd*^{i} *ma riḍyit tiggawwiz-u* he went on cultivating his relationship with her until she agreed to marry him. **2** to be brought near. *ʕil-ʕakl itɢarrab mil-kalb* the food was brought close to the dog. - vn *taɢarrub*; ava/iva *mitɢarrab*.

قارب *ɢaarib*^{1} /vt/ to become close to, approximate. *ʕiḥna bi-nɢaarib baɛḍ*^{i} *fis-sinn* we're close to each other in age. - vn *miɢarba*; ava *miɢaarib*.

اتقارب ʕitɢaarib /vi/ to become close to one another, approximate one another. *humma mitɢarbiin fiṭ-ṭuul* they're close to each other in height. - ava *mitɢaarib*.

استقرب ʕistaɢrab /vt/ **1** to consider close. *ʕistaɢrabt il-masaafa wi-mifiit ɛala riglay-ya* I thought it a short distance so I walked. **2a** to render shorter. *ʕistaɢrabna s-sikka ɛan ṭariiɢ ig-gaamiɛ* we took a short cut by way of the mosque. **2b** to render sooner. *ʕistaɢrab il-maɛaad* he moved up the appointment. - vn *ʕistiɢraab*; ava *mistaɢrab*.

ق ر ب [2]

قربة *ɢirba* /n pl *ɢirab*/ **1a** water-skin. ‖*bi-yunfux fi-ɢirba maɢṭuuɛa* (he puffs on a torn water-skin) ≈ he's flogging a dead horse. **1b** hot-water bottle. **2** (set of) bagpipes. *musiiqa l-ɢirab* bagpipe music.

قارب *ɢaarib*^{2} /n pl *ɢawaarib*/ **1** rowing boat. **2a** oval-shaped platter. **2b** sauce-boat.

ق ر ب ز

قرابيز *ɢarabiiz, ɢarabiiz* (also *ɢarbuuz*): *fi-ɢarabiiz-, fi-ɢarabiiz-* (also *fi-ɢarbuuz*) in the area of the responsibility of, in the lap of. *ḫaṭṭeet il-ḫikaaya f-ɢarabiiz-u* I dumped the matter into his lap, I left the matter up to him. *wiɢiɛ fi-ɢarbuuz-i* it devolved upon me.

ق ر ب ط

قربط *ɢarbaṭ* /vi/ to limit one's spending, cut down on one's expenses. *ɢarbaṭt*^{a} *ɛala nafs-i fis-sagaayir* I cut down on what I spent on cigarettes. - also *ɢarmaṭ*. - vn *ɢarbaṭa*; ava *miɢarbaṭ*.

اتقربط ʕitɢarbaṭ /vi/ (impersonal) passive of *ɢarbaṭ*. *kaan bi-yitɢarbaṭ ɛaleehum wi-humma ṣɣayyariin* when they were young, they were kept short of money. - vn *tiɢarbiiṭ*; iva *mitɢarbaṭ*.

ق ر ب ع

قربع *ɢarbaɛ* /vt/ to gulp down. *b-aɢarbaɛ fingaan ɢahwa ɢabl*^{i} *m-aruuḥ if-fuɣl* I gulp down a cup of coffee before going to work. - vn *ɢarbaɛa*; ava *miɢarbaɛ*.

اتقربع ʕitɢarbaɛ /vi/ to be gulped down. - iva *mitɢarbaɛ*.

ق ر ج غ –

قارجغار *qargaɣaar* <T *karcığar*> /n/ *[mus]* mode in Arabic music beginning on D and having E half flat and A flat (see also *fuuri*).

ق ر ج و ز

قراجوز، أراجوز *ɢaragooz* <T *karagöz*> /n/ puppet show similar to Punch and Judy.

ق ر ح [1]

قرح *ɢaraḥ*^{1}, *ɢaraḥ (a)* /vt/ to upset, hurt (s.o.). *yaama ɢalb-a-ha kaan maɢruuḥ mil-ɣiira* how much her heart was wounded by jealousy. *ya ɢarḥit-hum minha* how upset they are by her! - vn *ɢarḥ, ɢarḥ, ɢarḥa, ɢarḥa*; ava *ɢaariḥ*; pva *maɢruuḥ, maɢruuḥ*.

قرح *ɢaraḥ*^{2} *(a)* /vi/ to become shameless, hardened or tough. - vn *ɢarḥ, ɢuruḥiyya*; ava *ɢaariḥ*.

قرح *ɢurḥ* /n/ shamelessness, insensibility to disgrace. *ʕil-ɢurḥ*^{i} *bi-yṭull*^{i} *min ɛenee-ha* ≈ she has a brazen look.

قرحة *ɢurḥa, qurḥa* /n pl *ɢuraḥ, quraḥ*/ ulcer, sore.

قرح *ɢiriḥ* /adj * and pl *ɢuraḥa*/ bold, hardened, shameless. *kaddaab wi-ɢiriḥ* a shameless liar.

قروحيّة *ɢuruḥiyya = ɢurḥ. di ɢuruḥiyyit ɛeen minnu* this is shameless behaviour on his part!

اتقرح ʕitɢaraḥ, ʕitɢaraḥ /vi/ to be made or become

upset, be or become hurt. - ava/iva *mitqirih*.

انقرح *ʔinqarah, ʔinqarah* = *ʔitqarah*. - ava/iva *minqirih*.

قرّح *qarrah, qarrah* **1** /vt/ to make sore. *ʔil-ħuzn' qarrah qalb-a-ha* ≈ sadness made her heart heavy. – /vi/ **2** to become sore. *ʃafayf-u qarrahit mil-bard* his lips became sore from the cold. **3a** to become fixed or ingrained. *ʔil-wasaaxa mqarraha fil-libs* the dirt is ingrained in the clothing. *ʔil-kidb' mqarrah fii* lying is ingrained in him, he's an inveterate liar. **3b** to become seasoned, hardened, or well-tried. - vn *taqriih*; ava/pva *miqarrah, miqarrah*.

اتقرّح *ʔitqarrah, ʔitqarrah* /vi/ to be made sore. - iva *mitqarrah, mitqarrah*.

ق ر ح [2]

قريحة *qariiha: bil-qariiha* intuitively. *qidirt afham il-mawḍuuʕ bil-qariiha* I was able to understand the subject intuitively.

اقترح *ʔiqtarah* /vt/ to propose, suggest. *bi-tiqtirih ʔeeh* what do you propose? - vn *ʔiqtiraah*; ava *miqtirih, miqtirih*; pva *muqtarah*.

اقتراح *ʔiqtiraah* /n pl *-aat, -aat*/ suggestion, proposition, proposal.

مقترحات *muqtarahaat* /pl n/ suggestions, propositions, proposals.

ق ر د [1]

قردخانة *qardaxaana* (also *qardaʏaana*) /n pl *-aat*/ noise, uproar. *ʕamal qardaxaana* he made a big hullabaloo, he raised pandemonium.

قرد *qird* /n pl *quruud*/ baboon, ape. *ʔil-qird' f-ʕeen ʔumm-u ʏazaal [prov]* ≈ love is blind.

قرداتي *quradaati* /n pl *-yya*/ street entertainer who performs with a baboon or monkey.

قرّد *qarrad* /vi/ to be responsible for monkey-like people (usually children). *ʔiħna l-mudarrisiin baqa qaʕdiin niqarrad ṭuul in-nahaar* we teachers, now, are training monkeys all day long! *ʔatgawwiz bint' ʕumr-a-ha nuṣṣ' ʕumr-i - huwwa-na ħ-aqarrad baqa* marry a girl half my age? do you think I have the patience to humour and play with kids! - vn *taqriid*; ava *miqarrad*.

ق ر د [2]

قراد *quraad* /coll n/ tick(s).

قرادة *quraada* /unit n, pl *-aat*/ a tick.

ق ر د ح

قرديحى *qurdeeḥi* /adj invar/ of poor quality, second-rate. *mubilya qurdeeḥi* cheap shabby furniture. *ʔakl' qurdeeḥi* miserable food (without meat).

ق ر د غ – see [1] ق ر د : *qardaʏaana*

ق ر د ن

قردان *qirdaan: ʔabu qirdaan* white egret, cattle egret. ‖*zayy' ʔabu qirdaan haayif wi-nḍiif* ≈ meticulous and tidy but simple-minded.

قردن *qardin* /vi/ to become thin (like an egret). *ma-lha qardinit kida* what's happened to make her lose weight like this? - vn *qardana*; ava *miqardin*.

ق ر ر [1]

قرّ *qarr'*, *qarr (i)* /vi/ to confess, come out with the truth. *min qarr' b-zamb-u ʏafar-lu rabb-u [prov]* God forgives him who admits his fault. - vn *qarr, qarr, qararaan*; ava *qaarir*.

قرار *qaraar* /n pl *-aat*/ **1** bottom, bottom part. *baḥr' ma-luu-ʃ qaraar* a bottomless sea. ‖*gaab qaraar-u* he did him in. - *ma-ħadd'-ʃ ʕirif-lu qaraar* no one could trace him, he wasn't to be found. **2** *[mus]* **2a** bass register, lowest octave of an instrument. **2b** instrumental piece played as introduction to a singer, and repeated as refrain.

قرارى *qiraari* /adj * and pl *-yya*/ inveterate, seasoned.

قرار *qaraar*↑ /n pl *-aat*/ **1** decision. **2** decree, ruling. *qararaat gumhuriyya* presidential decrees.

مقرّ *maqarr*↑ /n pl *maqaarr*/ **1** site. *maqarr*[a] *ʕamal* work site, work premises. **2** headquarters. *maqarr il-ʔumam il-muttaḥida* the Headquarters of the United Nations.

قارّة *qarra*↑, *qaarra*↑ /n pl *qaarraat*/ continent.

قرّر *qarrar* /vt/ **1** to cause to confess, force the truth out of. **2** to question (s.o.) with the intention of extracting a confession. - vn *taqriir, taqriir*; ava/pva *miqarrar*.

قرّر *qarrar*↑ /vt/ **1** to fix, stipulate. *ʕeeh ik-kutub illi qarrarit-ha wzaarit it-taʕliim lis-sana g-gayya* which books has the Ministry of Education set for the coming year? *rasm' muqarrar* set fee. **2** to decide. *qarrart asaafir fil-ħaal* I've decided to travel immediately. *qarraru (ʔinn') yigtimʕu* they decided to hold a meeting. - vn *taqriir*; ava *muqarrir*; pva *muqarrar*.

تقرير *taqriir* /n pl *taqariir*/ report. *bi-yfattif wi-yiktib taqriir* he makes an inspection and writes a report.

مقرّر *muqarrir*↑ /n */ chairman.

مقرّر *muqarrar*↑ /n pl *-aat*/ syllabus.

اتقرّر *ʔitqarrar* /vi/ passive of *qarrar*. - iva *mitqarrar*.

اتقرّر *ʔitqarrar*↑ /vi/ **1** to be fixed, be stipulated. **2** to be decided. - iva *mitqarrar*.

إقرار *ʔiqraar*↑ /n pl *-aat*/ declaration. *ʔiqraar zimma*

maliyya civil servant's declaration of personal assets. *ʕiqraar gumruki* customs declaration.

استقرّ *ʕistaqarr, ʕistaqarr* /vi/ to settle down, become settled. *ʕaawiz yitgawwiz wi-yistaqirr* (or *yistaqarr*) he wants to get married and settle down. *laazim yastaqirru ʕala raʕy* they must make a decision. - vn *ʕistiqraar, ʕistiqraar*; ava *mistiqirr, mistaqarr*.

ق ر ر [2]

قرّ *qarr[2] (u)* /vi/ **1** to jabber on about something, thus risking attracting the evil eye. *min kutr[i] ma qarreeti (ʕaleehum) ma-tgawwizuu-ʃ* you jinxed their getting married with all your jabbering (about them). ‖ *ya naas ya ʃarr[i] kfaaya qarr* phrase (found in particular inscribed on vehicles) intended to discourage envious comments. **2** to nag. *tiʕibt[i] min qarr[i] mraat-i* I got tired of my wife's nagging. **3** to rumble, growl (of a stomach). - vn *qarr, qararaan*; ava *qaarir*; pva *maqruur*.

اتقرّ *ʕitqarr* /vi/ (impersonal) passive of *qarr[2]*. *min yoom ma tqarr[a] ʕala ʃiħħit-u w-huwwa ʕayyaan* he's been ill since the chatter about his being so healthy and strong. - iva *mitqarr*.

انقرّ *ʕinqarr* = *ʕitqarr*. - iva *minqarr*.

ق ر ش [1]

قرش *qaraʃ, qaraʃ (u)* /vt/ to crunch, crush with the teeth. *qaʕad gamb[i] minni yuqruʃ ʕala nyaab-u* he sat next to me grinding his teeth. ‖ *qaarif malħit(-u)* always picking on (s.o.). - vn *qarf, qarf, qaraʃaan*; ava *qaarif*; pva *maqruuf, maqruuf*.

اتقرش *ʕitqaraʃ, ʕitqaraʃ* /vi/ to be crunched, be crushed with the teeth. - iva *mitqirif*.

انقرش *ʕinqaraʃ, ʕinqaraʃ* = *ʕitqaraʃ*. - iva *minqirif*.

ق ر ش [2]

قرش *qirf[1]* <T *kuruş*> /n pl *quruuf, qurúfa*/ **1a** one piastre, a one-piastre coin. *ʕilli ma-maʕ-huu-ʃ qirf[i] ma-ysawii-ʃ qirf [prov]* who hasn't a penny isn't worth a penny. ‖ *qirfeen* (1) two piastres. (2) indeterminate sum of money. - *qirf abyaḍ* half-piastre coin. - *ʕil-qirf il-ʕabyaḍ yinfaʕ fil-yoom il-ʕiswid [prov]* ≈ save for a rainy day. **1b** *[non-Cairene]* half a piastre, a half-piastre coin. **2** unit of weight for measuring hashish based on the obsolete half-piastre with a hole in the centre.

قروش *quruuf* /pl n/ fish scales.

قروشي *quruufi* /adj invar/ dappled. *ħuṣaan ʕazraq quruufi* a dapple-grey horse.

ق ر ش [3]

قرش *qirf[2]* /n/ shark. *samakit qirf* a shark.

ق ر ش [4] see ق ر ى ش : *qariif*

ق ر ش ا ن

قرسانة *qarafaana* /n pl *-aat*/ old battle-axe (of a woman).

ق ر ص [1]

قرص *qaraṣ (u)* /vt/ **1** to sting, bite (of an insect, a snake). ‖ *ma-tasiq-ʃ[i] fir-raagil da - da-na lissa maqruuṣ minnu* don't trust that man! I've just been stung by him! **2** to pinch, tweak. ‖ *ma-tilʕab-ʃ[i] maʕaa - da b-yuqruṣ iz-zahr* don't play with him, he cheats with the dice! **3** to tighten, pull tight. *ʕuqruṣ il-ħizaam* tighten the girth! - vn *qarṣ*; ava *qaariṣ*; pva *maqruuṣ*.

¶ *qaraṣ ʕala* to apply pressure to. *ʕaawiz ħadd[i] yuqruṣ ʕalee ʕaʃaan yiʃtaɣal* he needs someone to constrain him to work. *qaraṣ ʕala ʕiid-i* he squeezed my hand. *qaraṣ ʕal-banziin* he stepped on the gas.

قرص *qiriṣ, quruṣ (a)* /vi/ to be bitten, be stung (by an insect or a snake). - vn *qaraṣ*; ava *qarṣaan*.

قرصة *qarṣa* /pl *-aat*/ instance noun of *qarṣ*.

قرصان *qarṣaan* /adj */ **1** bitten or stung (by an insect or snake). **2** *[slang]* penny-pinching, tight-fisted. *naas qarṣaana (ʕal-filuus)* penny-pinching people.

اتقرص *ʕitqaraṣ* /vi/ passive of *qaraṣ*. ‖ *ga ʕaʃaan itqaraṣ ʕalee* he came because he was constrained. - iva *mitqiriṣ*.

انقرص *ʕinqaraṣ* = *ʕitqaraṣ*. - iva *minqiriṣ*.

قرّص *qarraṣ[1]* /vt/ **1** to sting, bite (repeatedly, of an insect). *ʕin-namuus qarraṣ-ni bil-leel* the mosquitoes ate me up last night! **2** to pinch, tweak (hard or repeatedly). - vn *taqriiṣ*; ava *miqarraṣ*.

اتقرّص *ʕitqarraṣ[1]* /vi/ **1** to be stung or bitten (repeatedly, by an insect). **2** to be pinched or tweaked (hard or repeatedly). - iva *mitqarraṣ*.

ق ر ص [2]

قرص *qurṣ* /n pl *ʕiqraaṣ, ʕaqraaṣ*/ **1a** disc, something disc-shaped. ‖ *qurṣ[i] gilla* a dung cake. - *qurṣ ig-gamal* a camel's chest-callus. - *qurṣ il-makana* vaporization chamber of a primus stove. - *qurṣ[i] tilifoon* telephone dial. - *qurṣ[i] ʕasal* honeycomb. **1b** *[athl]* discus. **2** pill, tablet. *qurṣ[i] mnawwim* a sleeping pill.

قرصة *qurṣa* /n pl *-aat, quraṣ*/ **1a** large disc-shaped roll of bread. **1b** disc-shaped piece of *kaḥk*. **2** any of various objects having a disc-like or circular shape (e.g., sewn-in crown-piece of a cap or hat, small round mat to

protect a table surface). **3** panel of wood (especially as part of a piece of furniture). *qurṣit maktab* top of a desk. *qurṣit kursi* seat of a chair.

قرّص *qarraṣ*[2] /vt/ to shape (dough) into rounds. - vn *taqriiṣ*; ava *miqarraṣ*.

اتقرّص *ʔitqarraṣ*[2] /vi/ to be shaped into rounds (of dough). - iva *mitqarraṣ*.

[3] ق ر ص see [1] ق ر و ص : *qaruuṣ, qaruuṣa*[1]

[4] ق ر ص see [2] ق ر و ص : *qaruuṣa*[2]

ق ر ص ن

قرصنة *qarṣana* /n/ piracy. *ʔil-qarṣana l-gawwiyya* air piracy, hijacking.

قرصان *qurṣaan, qurṣaan* /n pl *qaraṣna, qaraṣna*↑/ pirate.

ق ر ص ى ا

قراصيا *qaraṣya* <Gr *kerasia*> /coll n/ prune(s).

قراصياية *qaraṣyaaya* /unit n, pl *-aat*/ a prune.

[1] ق ر ض

قرض *qaraḍ*[1] *(u)* /vt/ **1** to punch (paper). *ʔil-kumsari qaraḍ it-ṭazaakir* the conductor punched the tickets. **2** to scrub (clothes). **3** to gnaw on (of rodents). — /vi/ **4** to gnaw. *ma-tuqruḍ-ʃ' f-ḍawafr-ak* don't chew your finger-nails! ‖ *qaraḍ ɛala snaan-u* he gnashed his teeth in anger. - vn *qarḍ, qaraḍaan*; ava *qaariḍ*; pva *maqruuḍ*.

اتقرض *ʔitqaraḍ* /vi/ passive of *qaraḍ*. - iva *mitqiriḍ*.

انقرض *ʔinqaraḍ* /vi/ **1** = *ʔitqaraḍ*. **2** to become extinct. - vn *ʔinqiraaḍ*; ava *munqariḍ*; iva *minqiriḍ*.

[2] ق ر ض

قرض *qarḍ*↑ /n pl *quruuḍ*/ loan.

أقرض *ʔaqraḍ* /vt/ to lend (s.th.) to (s.o.). - vn *ʔiqraaḍ*; ava *muqriḍ*.

اقترض *ʔiqtaraḍ*↑ /vi/ to borrow (money), take a loan. - vn *ʔiqtiraaḍ*; ava *muqtariḍ*.

[3] ق ر ض

قرض، قرظ *qaraḍ*[2] /coll n/ pods of the sunt tree (used medicinally and in the manufacture of ink).

قرضة، قرظة *qaraḍa* /unit n, pl *-aat*/ a pod of the sunt tree.

[1] ق ر ط

قرط *qaraṭ (u)* **1** /vt/ to cut off. *ʃiil ʔiid-ak ya waad l-aqruṭ-ha* take your hand away, kid, or I'll cut it off! *qaraṭ-u bi-snaan-u* he bit it off. **2** /vi/ to tighten, become tight. *ʔig-gazma b-tuqruṭ ɛala rigl-i* the shoe pinches my foot. *ʔil-baab qaraṭ ɛala ṣbaaɛ-i* the door squashed my finger. *baṭn-i b-tuqruṭ ɛalayya* my stomach has cramps. - vn *qarṭ, qaraṭaan*; ava *qaariṭ*; pva *maqruuṭ*.

قرطة *qarṭa* /n pl *-aat*/ **1** instance noun of *qarṭ*. **2** /also pl *quraṭ*/ (head) kerchief.

مقروطة *maqruuṭa* /n pl *maqariiṭ*/ sawn-off shotgun.

اتقرط *ʔitqaraṭ* /vi/ to be cut off. - vn *mitqiriṭ*.

انقرط *ʔinqaraṭ* = *ʔitqaraṭ*. - iva *minqiriṭ*.

قرّط *qarraṭ* /vt/ **1** intensive of *qaraṭ* 1. **2** to tighten. *ʔir-rubaaṭ ɛaawiz taqriiṭ* the bandage needs tightening. *qarraṭ iṣ-ṣamuula* he tightened the screw. - /eliptically/ *ma-tqarraṭ-ʃ' ɛala baṭn-i* don't tighten (e.g., the belt) round my stomach! — /vi/ **3** to press, apply pressure. *qarraṭ ɛal-faraamil* step on the brakes! *qarraṭt*[a] *ɛalee ɛaʃaan yiigi* I pressed him to come. - vn *taqriiṭ*; ava/pva *miqarraṭ*.

تقريطة *taqriiṭa* /pl *-aat*/ instance noun of *taqriiṭ*.

اتقرّط *ʔitqarraṭ* /vi/ passive of *qarraṭ* 1 and 2. - iva *mitqarraṭ*.

[2] ق ر ط see ق ر ا ط : *qiraaṭ*

ق ر ط س

قرطاس *qurṭaas* /n pl *qaraṭiis*/ **1** paper cornet. **2** cuckold.

قرطس *qarṭas* /vt/ **1** to make a cornet of (paper). **2** to make a cuckold of. *miraat-u mqarṭasaa* his wife is putting horns on him. - vn *qarṭasa*; ava/pva *miqarṭas*.

اتقرطس *ʔitqarṭas* /vi/ passive of *qarṭas*. - iva *mitqarṭas*.

ق ر ط ف

قرطف *qarṭaf* /vt/ to strip of leaves, defoliate. *ʔirsili l-muluxiyya qabl' ma-tqarṭafii-ha* wash the *muluxiyya* before you pluck off its leaves. - also *qaṭṭaf*. - vn *qarṭafa*; ava/pva *miqarṭaf*.

اتقرطف *ʔitqarṭaf* /vi/ to be stripped of leaves, be defoliated. - vn *tiqarṭiif*; iva *mitqarṭaf*.

[1] ق ر ط م

قرطم *qarṭam* /vt/ to nibble at, take (small) bites of. *bi-yqarṭam ir-riʔiif* he is eating away the loaf with small bites. *baṭṭal tiqarṭam (fi-)ḍawafr-ak* stop biting your finger-nails! - vn *qarṭama*; ava/pva *miqarṭam*.

اتقرطم *ʔitqarṭam* /vi/ passive of *qarṭam*. - vn *tiqarṭiim*; iva *mitqarṭam*.

[2] ق ر ط م

قرطم *qurṭum* /n/ safflower, safflower seeds.

ق ر ظ see [3] ق ر ض

[1] ق ر ع

قرع *qarɛ* **1** /coll n/ gourd(s). *qarɛ[i] ruumi* pumpkin (Curcubita pepo). *qarɛ[a] ɛasali* or *qarɛ iṣṭambulli* winter squash (Curcubita maxima). **2a** corruption, corrupt behaviour. *ʕif-faɛb[i] qirif mil-qarɛ illi f-kull[i] ḥitta* the people became fed up with the corruption everywhere. **2b** empty boasting.

قرعة *qarɛa* /n pl *-aat*/ /unit n/ a gourd.

قرعايه *qarɛaaya* /unit n, pl *-aat*/ a gourd.

قرعجى *qarɛagi* /n pl *-yya*/ **1** one who is venal or corrupt. **2** braggart.

قرّع *qarraɛ[1]* /vi/ **1** to become venal or corrupt. **2** to brag, engage in empty boasting. - vn *taqriiɛ*; ava *miqarraɛ*.

[2] ق ر ع

قرع *qiriɛ, quruɛ (a)* /vi/ to be or become bald from or afflicted by ringworm. ‖ *ʕid-dukkaana qirɛit* the shop was cleared out (of stock). - vn *qaraɛ*; ava *qarɛaan*.

قرعة *qaraɛa* /n pl *-aat*/ **1** head afflicted by ringworm. **2** *[deris]* bald head.

أقرع *ʕaqraɛ* /adj, fem *qarɛa*, pl *qurɛ*/ **1** afflicted by ringworm. *ʕil-qarɛa titbaaha b-faɛr[i] bint uxt-a-ha [prov]* the bald woman boasts of her niece's hair. **2** old-hat, stale. *nukta qarɛa* a tired joke. *ḥaraka qarɛa* an obvious trick. ‖ *baṭṭiixa qarɛa* white tasteless water-melon.

قراع *quraaɛ* /n/ ringworm.

اقرّع *ʕiqraɛɛ* /vi/ to be or become afflicted by ringworm. - ava *miqraɛɛ*.

[3] ق ر ع

قرع *qaraɛ (i)* /vt/ to curb, check. *ma-fii-ʃ ḥadd[i] yiɛraf yiqriɛ-u* no one can keep him in line. - ava *qaariɛ*; pva *maqruuɛ, maqruuɛ*.

مقرعة *maqraɛa* /n pl *maqaariɛ*/ switch of split cane.

اتقرع *ʕitqaraɛ* /vi/ to be curbed, be checked. - iva *mitqiriɛ*.

قرّع *qarraɛ[2]* /vt/ to chide, upbraid. *ɛammaal yiqarraɛ-na min saaɛit ma waṣal* he's been carping at us since he arrived. - vn *taqriiɛ*; ava *miqarraɛ*.

[4] ق ر ع

قرعة *qurɛa* /n pl *-aat*/ **1** settling a question or making a choice by drawing lots or tossing a coin. *ḥa-ywazzaɛu ʃ-ʃuqaq bil-qurɛa* they will assign the flats by drawing lots. **2** *[obsol]* medical test for military conscription. *raaḥ il-qurɛa* he was called for the medical test to determine whether or not he would be conscripted.

[1] ق ر ف

قرف *qirif, quruf (a)* /vi/ to become fed up, disgusted, sickened or repelled. *ʃana qrift[i] mil-ɛiiʃa di* I became sickened by this life. ‖ *lamuuna f-balad qarfaana [prov]* ≈ just what's needed. - vn *qaraf, qarafaan*; ava *qarfaan*.

قرف *qaraf[1] (i)* /vt/ to disgust, sicken, repel. *da-nta b-tiqrif-ni moot* you make me sick! *humma maqrufiin minnu* ≈ they are fed up with him. - vn *qarf, qaraf*; ava *qaarif*; pva *maqruuf*.

قرف *qaraf[2]* /n/ filth, something disgusting.

اتقرف *ʕitqaraf* /vi/ to be disgusted, sickened or repelled. - iva *mitqirif*.

قرّف *qarraf* /vt/ to disgust, sicken, repel. *manẓar yiqarraf il-bani ʃaadam* a sight to sicken a man. - vn *taqriif*; ava/pva *miqarraf*.

اتقرّف *ʕitqarraf* /vi/ passive of *qarraf*. - iva *mitqarraf*.

قارف *qaarif* /vt/ to bore (s.o.), make (s.o.) fed up. - vn *miqarfa*; ava *miqaarif*.

اتقارف *ʕitqaarif* /vi/ to be bored, be made fed up. - iva *mitqaarif*.

مقرف *muqrif* /adj */ disgusting, sickening, repellent.

استقرف *ʕistaqraf* **1** /vt/ to consider repellent, disgusting or sickening. *ʕistaqraf il-ʃooḍa w-rafaḍ-ha* he found the room repellent and refused it. **2↓** /vi/ to become disgusted, sickened or repelled. - ava *mistaqraʿ*.

([2] ق ر ف)

قرفة *qirfa[1]* /n/ cinnamon.

قرفة *qirfa[2]* /n pl *qiraf*/ luck (of a deal), way things turn out (on a deal). *ʕil-ʃarḍ[i] gat qirfit-ha kwayyisa* the land turned out to be a good buy. *ʕig-gawaaz qiraf [prov]* marriage is all a matter of luck. ‖ *ṭilɛit qirfit-ha wiḥʃa* she turned out to be a lousy deal as a wife.

[3] ق ر ف see ق ر ا ف : *qaraafa*

ق ر ف ص

قرفص *qarfaṣ* /vi/ to squat on one's heels. - vn *qarfaṣa*; ava *miqarfaṣ*.

قرافيص *qarafiiṣ: qaɛad ɛala qarafiiṣ(-u)* to squat on one's heels.

ق ر ق ر

قرقر *qarqar* /vi/ to rumble, growl (of the stomach). *baṭn-i bi-tqarqar mig-guuɛ* my stomach is growling from hunger. - vn *qarqara*; ava *miqarqar*.

ق ر ق
قرق *qaraq (u)* /vi/ to grumble, grouse. *dayman tuqruq wi-ma-tbaṭṭal-f' qarq* she's always grousing and never stops! - vn *qarq*.
قرّاق *qarraaq* /adj */ given to grumbling and grousing.
قرّق *qarraq* /vi/ to chortle, cackle. - vn *taqriiq*; ava *miqarraq*.

[1] ق ر ق ش
قرقش *qarqaf, qarqif* /vt/ to chew, crunch (crisp food). ‖*raagil yiqarqaf il-ħadiid* a man who eats nails, a real tough guy. - *ʃin ɛaamit qarqaft' w-ʃin ʁirqit qarqaft* ≈ it's all the same to me. - vn *qarqafa*; ava/pva *miqarqaf, miqarqif*.
قرقوشة *qarquufa* /n pl *qaraqiif*/ **1** a kind of dry biscuit, cracker. **2** cartilage.
اتقرقش *ʃitqarqaf, ʃitqarqif* /vi/ to be crunched, be crushed by the teeth. - iva *mitqarqaf, mitqarqif*.

[2] ق ر ق ش see ق ر ق و ش: *qaraqoof*

ق ر ق ض
قرقض *qarqaḍ* /vt/ to gnaw on. ‖*kalb' yqarqaḍ fi-ɛaḍma* one who is engaged in something devoid of importance or consequence. - vn *qarqaḍa*; ava/pva *miqarqaḍ*.
قرقوضة *qarquuḍa* /n pl *qaraqiiḍ*/ small piece, fragment.
اتقرقض *ʃitqarqaḍ* /vi/ to be gnawed. *ɛaḍm' mitqarqaḍ* chewed-up bone. - vn *tiqarqiiḍ*; iva *mitqarqaḍ*.

ق ر ق ع
قرقع *qarqaɛ* /vi/ to ring out, echo, resound. *diħkit-u bi-tqarqaɛ tisammaɛ id-dinya* his laugh rings out loudly for all to hear. - vn *qarqaɛa*; ava *miqarqaɛ*.

ق ر ق و ش
قراقوش *qaraqoof* <T prop n *karakuş*>: *ħukm' qaraqoof* tyranny, complete dictatorship.

[1] ق ر م
قرم *qaram (u)* /vt/ to bite hard into, bite off. *wi-hiyya bi-tdaafiɛ ɛan nafs-a-ha raaħit qarma draaɛ-u* while she was defending herself, she bit deeply into his arm. - vn *qarm*; ava *qaarim*; pva *maqruum*.
قرمة *qarma* /pl *-aat*/ instance noun of *qarm*.
قرم *qirim* /adj */ tough, hard-bitten.
اتقرم *ʃitqaram* /vi/ to be bitten into, be bitten off. *yiṣaħħ il-ɛeef yitqiriṃ bis-sinaan kida* is it right that (a loaf of) bread should be bitten into like that? - iva *mitqirim*.
انقرم *ʃinqaram* = *ʃitqaram*. - iva *minqirim*.
قرّم *qarram* /vt/ **1** to harden, toughen (e.g., of experience). *ʃis-suuq illi qarram-u* it is the market which has toughened him. *wiliyya mqarrama* a hardbitten woman. ‖*miqarram (ɛal-filuus)* miserly. **2** to top and tail (vegetables). - vn *taqriim*; ava *miqarram*.
اتقرّم *ʃitqarram* /vi/ passive of *qarram*. - iva *mitqarram*.

[2] ق ر م
قرمة *qurma* <Gr *kormos*> /n pl *quram*/ **1** tree stump. **2** chopping block.

ق ر م ز
قرمزى *qurmuzi, qurmuzi* /adj/ scarlet. *ʃil-ħumma l-qurmuziyya [path]* scarlet fever.

ق ر م ش
قرمش *qarmiʃ* **1** /vt/ to chew, crunch (crisp food). *ʃanaam ʃizzaay wi-nta bi-tqarmiʃ baskawiit fi-widn-i* how can I sleep with you chewing biscuits in my ear! ‖*ħ-aqarmiʃ-ak* I'll crunch your bones to meal! **2** /vi/ to become dry and crisp. *xalli l-makaroona fil-furn' ɛaʃaan tiqarmiʃ* leave the pasta in the oven so it may get crisp. - vn *qarmaʃa*; ava *miqarmiʃ*.
اتقرمش *ʃitqarmiʃ* /vi/ **1** to be chewed or crunched. **2** to become dry and crisp. **3** to sizzle with annoyance or indignation. - ava/iva *mitqarmiʃ*.

ق ر م ط
قرمط *qarmaṭ* /vi/ to limit one's spending, cut down on one's expenses. *qarmaṭit ɛala l-ɛiyaal fil-maṣruuf* she cut down on what she spent on her children. - also *qarbaṭ*. - vn *qarmaṭa*; ava *miqarmaṭ*.

ق ر م و ط
قرموط *qarmuuṭ* /n pl *qaramiiṭ*/ Clarias anguillaris, Clarias lazera, a type of catfish found in the Nile. ‖*raagil qarmuuṭ* a slippery character.

[1] ق ر ن
قرن *qarn* /n pl *quruun*/ **1** pod. *qarn' xarruub* carob pod. *qarn' filfil* a single pepper. **2** *[anat]* amniotic sac. **3** horn. *qarn' gamuusa* a buffalo horn. *quruun ɛilba* horns that grow towards each other over the head. *quruun musaṭṭaḥa* flat backward-growing horns. ‖*ʃaayil id-dinya ɛala qarn-u* he's very depressed. - *waħiid il-qarn* rhinoceros. - *min qarn-u ʃadhin-lu [prov]* ≈ make him pay for all he gets. — /no pl/ **4** cuckold. **5** horn (as a

material). ‖*maṭwa qarn* flick-knife (of a type originally made with a horn handle).
قرنيّة *qarniyya* or *qarniyya* /n pl *-aat/ [anat]* cornea.
قرن *qirn: ḥaaṭiṭ qirn-(u) min qirn-(..)* (he's) always ready to pick on (s.o.). - also *niqr*.
قرّن *qarran* /vt/ **1** to cuckold. *di bitt^{i} sayba ḥa-tqarran illi yiggawwiz-ha ʕakiid* she is a loose girl who will certainly cuckold (the man) who marries her. **2** to top and tail (vegetables). — /vi/ **3** to become cuckolded (of a husband). **4** to produce pods (of a plant). - vn *taqriin*; ava/pva *miqarran*.
اتقرّن *ʔitqarran* /vi/ **1** to be cuckolded. **2** to be topped and tailed (of vegetables). - iva *mitqarran*.

ق ر ن ²
قرن *qaran↑ (i)* /vt/ to connect, join, unite. *ma-qarant^{i}-ʃ been il-ʔitneen* I didn't connect the two (things), I didn't see the connection between them. *ḥawagb-u maqruuna* his eyebrows grow together. - vn *qiraan*; ava *qaarin, qaarin*; pva *maqruun*.
قران *qiraan* /n/ **1** verbal noun of *qaran*. **2** perverseness. *humma ʕamliin qiraan maʕa baʕḍ* ≈ they're making things difficult for each other.
قران *qaraan↑, qiraan↑* /n/ marriage. *qaraan saʕiid* (I wish you) happy marriage!
قرن *qarn* /n pl *quruun*/ century. *ʔil-quruun il-wusṭa* the Middle Ages.
قرن *qirin* /adj */ perverse.
قرين *qariin↑* /n pl *quranaaʔ*/ formal term of reference to a husband. *malikit ʔingiltirra w-qarin-ha* the Queen of England and her consort. ‖*qariin is-suuʔ* one associated with what is evil.
قرين *qariin* /n pl *qurana*/ (in popular belief) one's spiritual double, one's counterpart in the spirit world (more commonly *ʔaxx*).
قرينة *qariina* /n/ **1** /pl *-aat*/ formal term of reference to a wife. **2** /pl *qaraaʔin*/ clue, indication.
قرينة *qariina^{1}* /n pl *qaraayin*/ (in popular belief) one's spiritual double, one's counterpart in the spirit world (more commonly *ʔuxt*).
قارن *qaarin* /vt and vi/ to compare. *ma-tiqdar-ʃ^{i} tqaarin beeni w-beenu* (or *tqarin-ni bii*) you can't compare between him and me. - vn *muqarna*; ava/pva *muqaarin, miqaarin*.
مقارنة *muqarna↑* /n pl *-aat*/ comparison.
اتقارن *ʔitqaarin* /vi/ to be compared. - iva *mitqaarin*.

ق ر ن ³ see ق ر و ن : *qaruun*

ق ر ن ⁴ see ق ر ي ن : *qariina²*

ق ر ن ب –
قرنبيط *qarnabiiṭ* <perh T *karnabit*> /coll n/ cauliflower(s).
قرنبيطة *qarnabiiṭa* /unit n, pl *-aat*/ a cauliflower.
قرنبيطيّاية *qarnabiṭiyyaaya* = *qarnabiiṭa*.

ق ر ن س
مقرنس *miqarnas* /n/ (in Islamic architecture) stalactite work, honeycomb work. (see Pl.G, 14).

ق ر ن ف ل
قرنفل *qurunfil* /coll n/ **1** clove(s). **2** carnation(s).
قرنفلة *qurunfila* /unit n, pl *-aat*/ **1** a clove. **2** a carnation.
قرنفلاية *qurunfilaaya* /unit n, pl *-aat*/ a clove.

ق ر ن ف –
قرنفيل *qaranfiil: tirs il-qaranfiil* bevel gear (of a watch).

ق ر و ¹
قرو *qarw* <Copt> /n/ *[bot]* oak. - also *ʔarw*.

ق ر و ² see ق ر ي : *qarawi*

ق ر و ا ن
قروان *qarawaan* <T *karavana*> /coll n/ metal or porcelain basin(s) (smaller than *ṭiʃt* q.v.).
قروانة *qarawaana* /unit n, pl *-aat*/ a metal or porcelain basin (smaller than a *ṭiʃt* q.v.). *qarawaanit muuna* rough metal bowl for carrying mortar or concrete.
قروانجي *qarawangi* /n pl *-iyya*/ construction labourer who carries mortar in an *qarawaana*.

ق ر و ص ¹
قاروص *qaruuṣ* /n/ Marone labrax, a type of bass found in the Nile and the Mediterranean. - also *ʕaruus*.
قاروصة *qaruuṣa^{1}* /unit n/ a bass.

ق ر و ص ²
قاروصة *qaruuṣa²* <prob It *grossa*> /n pl *-aat*/ carton, (containing a set number of packets). *qaruuṣit sagaayir* a carton of cigarettes.
قاروصاية *qaruṣaaya* = *qaruuṣa*.

ق ر و ن ¹
قارون *qaruun* /prop n/ lake in the Fayyum. ‖*maal qaruun* immense wealth, as in *ʕandu maal qaruun* he's filthy rich.

ق ر و ن ² see ق ر و ا ن : *qarawaan, qarawaana, qarawangi*

ق ر ى [1]

قرأ *ʔaqra (a)* /vt/ **1** to read. *ʔiqrii-li g-gawaab* read me the letter. ‖*ʔaqra l-fingaan* to read (the future in the dregs of) a coffee-cup. - *ʔaqra k-kaff* to read (the future in) a palm. **2** to recite (the Koran). ‖*xud xamiis-u ʕin fa-lla ma-ʔaqara* see *xamiis* 2c. — /vi/ **3** to read. *tiʕraf tiqra* can you read? ‖*miin yiqra w-miin yismaʕ* ≈ who gives a damn (what the problem is)? - vn *ʔiraaya*; ava *ʔaari*; pva *maqri*.

القرآن *ʕil-qurʕaan, ʕil-quraan* /n/ the Koran.

اتقرا *ʕitqara, ʕitʔara* /vi/ **1** to be read. **2** to be recited (of the Koran). ‖*ʕitqarit fatḥit-ha* (her *fatḥa* (of the Koran) has been recited) she has become engaged. **3** (impersonal) passive of *ʔara*. *ʕin-nuur da ma-yitqirii-ʃ fii* one can't read in that light. - iva *mitqiri*.

انقرا *ʕinqara* = *ʕitqara*. - iva *minqiri*.

قرّأ *ʔarra, ʔarra* /vt/ **1** to cause to read. **2a** to cause to recite (the Koran). *ʕilli yqarrii zayy illi yxarrii [prov]* (he is so undiscriminating that in his eyes) the one who teaches him the Koran is exactly like the one who gives him a hard time. **2b** to hire (s.o.) to recite the Koran. - vn *taqriyya*; ava *miqarri*.

اتقرّا *ʕitqarra, ʕitʔarra* /vi/ (impersonal) passive of *ʔarra*. *bi-yitqarra ʕal-mayyitiin fil-ʕaʕyaad* during feasts the Koran is recited for (the souls of) the dead. - iva *mitqarri*.

مقرئ *muqriʔ↑* /n */ professional Koran reciter.

استقرا *ʕistaqra↓* /vt/ to try to read. *ʕistaqra-lna g-gawaab* he tried to read us the letter. - ava *mistaqri*.

ق ر ى [2]

قرية *qarya↑* /n pl *qura*/ village.

قروى *qarawi↑* **1** /adj/ pertaining to villages. *ʕil-maglis il-qarawi* the village council. **2** /n */ villager.

ق ر ى ش

قريش *ʔariif*: *gibna ʔariif* kind of non-fat salted white cheese.

ق ر ى ف

قريف *ʔaryif* **1** /vt/ to displease, make gloomy, depress. *suluuk-u ʔaryif-ni* his behaviour got me down. **2** /vi/ to become displeased, gloomy or depressed. - vn *ʔaryafa*; ava/pva *miqaryif*.

اتقريف *ʕitqaryif, ʕitqaryaf* /vi/ to be displeased, be made gloomy, be depressed. - iva *mitqaryif*.

ق ر ى ن

قرينة *ʔariina*[2] <Gr *karina*> /n pl *-aat*/ *[naut]* keel. *looḥ il-ʔariina* garboard-strake.

ق ز ا ن

قزان *ʔazaan, ʔizaan* <T *kazan*> /n pl *-aat*/ boiler, cauldron.

ق ز ح

قزح *ʔazaḥ (a)* /vi/ **1** to leap. **2** to go uninvited, appear where one is not wanted. *ʈuul in-nahaar yiqzaḥ ʕandaha* he's always imposing himself (on her) in her home. — /vt/ **3** to leap across. *ʔazaḥ il-ʔanaaya* he leapt across the stream. - vn *ʔazḥ, ʔazaḥaan*; ava *ʔaaziḥ*.

قزحة *ʔazḥa* /inst n, pl *-aat*/ a leap.

قزّح *ʔazzaḥ* /vt/ to cause to leap. ‖*ʔazzaḥt-u sana* I got him to skip a year. - vn *taqziiḥ*; ava/pva *miqazzaḥ*.

اتقزّح *ʕitqazzaḥ* /vi/ passive of *ʔazzaḥ*. - iva *mitqazzaḥ*.

ق ز ر

قذر *qazir* /adj */ dirty. *naas qaziriin* dirty people (morally or physically).

أقذار *ʔaqzaar↑* /pl n/ dirt, filth.

قاذورات *qazuraat* /pl n/ dirt, filth.

قذارة *qazaara, ʔazaara* /n/ dirtiness.

ق ز ز [1]

قزّز *ʔazziz, qazziz* /vt/ to disgust, sicken. *manẓar yiqazziz in-nifs* a sickening sight. - vn *taqziiz*; ava *miqazziz, muqazziz*.

اتقزّز *ʕitqazziz* /vi/ to be sickened, be disgusted. *ʕana b-atqazziz min ʈariiqit muʕamlit-u lis-sitt' btaʕt-u* I am sickened by the way he treats his wife. - iva *mitqazziz*.

ق ز ز [2]

قزاز *ʔizaaz* **1** /coll n/ glass. *ʈaffaaya ʔizaaz* a glass ashtray. *ʔizaaz ʃibbaak* window pane. ‖*ʔizaaz ʕingiliizi* frosted glass. **2** /n/ window (pane). *ʕiqfil il-ʔizaaz* close the window!

قزازة *ʔizaaza* /n pl *-aat*/ **1** /unit n/ piece or pane of glass. **2** /pl also *ʔazaayiz*/ bottle. *ʔizaazit biira* a bottle of beer. **3** a glass cover or shield. *ʔizaazit saaʕa* watch glass. *ʔizaazit maktab* glass desk-top. *ʔizaazit lamba* glass chimney of a lamp.

قزّاز *ʔazzaaz'* **1** /n */ window pane and mirror seller. **2** /adj/ shiny. ‖*gazma ʔazzaaz* patent leather shoes. - *waraʔ ʔazzaaz* cellophane.

ق ز ز [3]

قزّ *ʔazz* **1** /n/ silk. *duud ʔazz* silkworms. **2** /adj invar/ raw (of silk). *ḥariir ʔazz* raw silk.

قزّاز *ʔazzaaz*[2] /n */ *[text]* hand-loom worker.

ق ز ز ي ر
قزّير *qazziir* <Gr *kassiteros*> /n/ **1** soldering alloy (made up of two parts lead to one part tin). **2** tin. - also *qaṣdiir*.

ق ز ع
قزعة *quzɛa* /adj invar/ *[deris]* short (of persons).

ق ز ف see ق د ف[2]: *qazaf, qaazifa, maqzuuf, qaziifa*

ق ز ق[1]
قزق *qazaq'* <T *kızak*> /n pl *-aat*/ **1** dolly, trolley. **2** *[naut]* slipway.

ق ز ق[2]
قزق *qazaq*[2] <T *kazık*> /coll n/ telegraph pole(s).
قزقة *qazaqa* /unit n, pl *-aat*/ a telegraph pole. - also *kazaka*.

ق ز ق ز
قزقز *qazqaz, qazqiz* /vt/ **1** to crack (seeds) between the front teeth. **2** to crunch on, munch (nuts, seeds etc.). ‖*qazqiz fi-siirit in-naas* to gossip maliciously about people. - vn *qazqaza*; ava/pva *miqazqaz, miqazqiz*.
اتقزقز *ʔitqazqaz, ʔitqazqiz* /vi/ passive of *qazqaz*. - iva *mitqazqaz, mitqazqiz*.

(ق ز م)
قزمة *qazma* <T *kazma*> /n pl *qizam*/ pick-axe.
قزم *qizm* /n pl *ʔaqzaam*/ dwarf, pigmy.

ق ز ن see ق ز ا ن: *qazaan, qizaan*

ق س س
قسّ *qiss'* /n pl *qasaawisa*/ formal term of reference to a priest or minister of the church.
قسّيس *qassiis* /n pl *qusus, qusasa, qusuus, qasawsa*/ priest, minister of the church.

ق س ط
قسط *qisṭ* /n pl *ʔaqsaaṭ, qisaaṭ*/ **1** instalment (of money due or paid). **2** /pl also *qusuuṭ*/ metal can (e.g., milkman's churn).
قسّط *qassaṭ* /vt/ **1** to divide up equally. **2** to pay for in instalments. *bi-yqassaṭ id-diyuun illi ɛalee* he pays his debts in instalments. **3** to allow payment for in instalments. *qassaṭ taman il-ʔarḍ" ɛala l-mullaak ig-gudaad* he allowed the new owners to pay the price of the land in instalments. ‖*bit-taqsiiṭ* on the instalment plan, by instalments. - vn *taqsiiṭ*; ava/pva *miqassaṭ*.
اتقسّط *ʔitqassaṭ* /vi/ passive of *qassaṭ*. - iva *mitqassaṭ*.

ق س ط ر
قسطرة *qasṭara* /n/ *[med]* catheter.

ق س م[1]
قسم *qasam'* *(i)* /vt/ **1a** to divide, divide up. *maqsuum nuṣṣeen* divided in half. *qasam if-faɛr' w-laff' kull' xuṣla* he sectioned off the hair and rolled up each lock. **1b** *[math]* to divide (a sum). *ʔiqsim xamsiin ɛala ɛafara* divide fifty by ten. **2a** to ordain, destine (of God). *rabb-i-na qasam laha l-ḥizn min badri* Our Lord ordained sadness for her (too) early (in life). **2b** *[Chr]* to ordain. *qasamuu qassiis* they ordained him priest. - vn *qasamaan, qisma*; ava *qaasim*; pva *maqsuum*.
قسم *qisim, qusum (a)* /vi/ to be destined, be ordained (i.e. by God). *ʔil-ḥizn' qisim laha* sorrow was destined for her. ‖*tibqa f-buqq-ak wi-tiqsam* (or *wi-tuqsam) li-ɣeer-ak [prov]* ≈ there's many a slip 'twixt the cup and the lip. - vn *qasamaan, qisma*.
¶ *ɛala (qadd') ma qusum* according to what is available, in the measure of what has been provided.
قسمة *qisma* /inst n, pl *-aat, qisam*/ **1** a division, a (fated) lot. ‖*ṣalaat il-qisma [Chr]* fraction prayer pronounced when breaking the Host. - *ʔilli lu qisma f-ḥaaga yfuf-ha [prov]* ≈ one's fate will be fulfilled, that's fate! (phrase of condolence). - *xad illi fii ʔil-qisma* (1) he took a gratuity. (2) he got a scolding. **2** *[math]* a division sum.
قاسم *qaasim'* /prop n/ male given name. ‖*nawwit qaasim* see *nawwa*.
قسم *qism, qism* /n pl *ʔaqsaam, ʔaqsaam*/ **1** section, division, department. *raʔiis il-qism* department head. **2** police station, precinct station.
قسيمة *qasiima* /n pl *qasaayim*/ **1** receipt, stub. **2** certificate. *qasiimit gawaaz* a marriage certificate. *qasiimit beeɛ* a bill of sale.
اتقسم *ʔitqasam* /vi/ passive of *qasam*. - iva *mitqisim*.
اتقسم *ʔitqisim* /vi/ (impersonal) passive of *qisim* and *qusum*. *ʔitqisim-lu bil-ḥizn* sadness was his ordained fate. - iva *mitqisim*.
انقسم *ʔinqasam* = *ʔitqasam*. - iva *minqisim*.
قسّم *qassim* /vt/ **1a** to divide up, subdivide. *qassimu maṣr" ɛala sitt' manaaṭiq* they divided Cairo into six areas. **1b** to distribute, share out. *qassimna l-ʔakl" ɛal-ɣalaaba* we distributed the food among the poor. **2** *[elec]* **2a** to distribute (the circuitry of wiring). **2b** to

regulate (electric voltage). *ʕik-kahraba fil-ɛarabiyya ɛawza taqsiim* the car's electrical voltage needs regulating. **3** *[mus]* to improvise around (of a solo instrumentalist). *qassim-lina ʃwayyit rast* improvise a bit of *rast* for us. — /vi/ **4** *[mus]* to improvise (of a solo instrumentalist). *qaaɛid ʈuul in-nahaar yiqassim ɛal-ɛuud* he sits all day improvising on the *ɛuud*. - vn *taqsiim*; ava/pva *miqassim*.

تقسيم *taqsiim* /n pl *taqasiim*/ (land used in a) development scheme.

تقسيمة *taqsiima* /n pl *-aat*/ **1** instance noun of *taqsiim*. **2** /pl also *taqasiim*/ *[mus]* short improvisation on a given melody type, either as a self-contained piece, or as a cadenza within a given piece.

اتقسّم *ʕitqassim* /vi/ passive of *qassim*. - iva *mitqassim*.

قاسم *qaasim*[2] /vt/ to share with (s.o. in s.th.). *qasim-ni fil-ʕakl' da* share that food with me! - vn *miqasma*; ava *miqaasim*.

اتقاسم *ʕitqaasim* **1** /vt/ **1a** to distribute amongst or share out with one another. *ʕitqasmu l-ʕakl* divide the food among yourselves. **1b** to divide up (with another, with others). *ʕitqaasim is-sudaani maɛaaya* he shared the peanuts with me. **2** /vi/ to make a distribution amongst one another. *ʕitqasimna fil-ʕakl* we shared out the food amongst ourselves. - ava/pva *mitqaasim*.

ق س م[2]

قسم *qasam*[2], *qasam*↑ *(i)* /n/ oath.

¶ *qasaman: qasaman bi-* ... I swear by .... *qasaman ɛaẓaman* ... ≈ I swear the greatest (possible) oath ..., as in *qasaman ɛaẓaman ɦ-afanyar-u law ma-qabb'-ʃ bil-filuus* I swear by all that is sacred, I'll do him in if he doesn't come up with the money!

أقسم *ʔaqsam*↑ /vi/ to take an oath, vow. *ʔuqsim bi-llaah* I swear by God. - iva *muqsim*.

ق س و see ق س ى : *qaswa, qasaawa*

ق س ى

قسى *qisi (a)* /vi/ to become cruel, become hard. *(qalb-u) qisi ɛalayya fa-sibt-u* he became cruel so I left him. - vn *qasayaan, qaswa*; ava *qaasi*.

قسوة *qaswa, qaswa* /n/ cruelty.

قساوة *qasaawa* /n/ cruelty.

قاسى *qaasi* /adj */ cruel, hard. *kaanu b-yiʃtaʕalu f-ẓuruuf qasya* they were working in harsh conditions.

أقسى *ʔaqsa* /el/ crueller/cruellest, harder/hardest.

اتقسى *ʕitqasa* /vi/ (impersonal) passive of *qisi*. *yaama tqasa ɛaleeha fil-madrasa* how cruelly she was treated at school! - iva *mitqisi*.

انقسى *ʕinqasa* = *ʕitqasa*. - iva *minqisi*.

قسّى *qassa* /vt/ **1** to render unfeeling, render callous. *qasseet qalb-i ɛalee* I hardened my heart against him. **2** to harden (iron) by quenching. - vn *taqsiyya*; ava *miqassi*.

قاسى *qaasa* **1** /vt/ to suffer from. *ʕil-wiɦda lli b-yiqasii-ha* the loneliness he suffers. **2** /vi/ to suffer. *huwwa mqaasi min il-ɦubb* he's suffering from the pangs of love. - vn *miqasiyya*; ava *miqaasi*.

ق ش ا ن

قيشانى *qiʃaani* (also *niʃaani*↓) <*Kashan* (in Iran)> /n/ glazed tiles, glazed tiling.

ق ش ح

قشح *·qaʃaɦ (a)* /vt/ to drive away, get rid of. *dahya tiqʃaɦ-u* may a disaster carry him off! - vn *qaʃɦ, qaʃaɦaan*; ava *qaaʃiɦ*; pva *maqʃuuɦ*.

اتقشح *ʕitqaʃaɦ* /vi/ **1** to be driven away. **2** to clear off. *ʕitqiʃiɦ min hina walla ʕandah il-buliṣ* get out of here or I'll call the police! - ava/iva *mitqiʃiɦ*.

انقشح *ʕinqaʃaɦ* = *ʕitqaʃaɦ*. - ava/iva *minqiʃiɦ*.

ق ش ر

قشر *qaʃar (i)* **1** /vt/ to peel (usually a small area). *ʕiqʃir ɦitta min il-baṭaṭsaaya w-ʃuuf lon-ha min guwwa* peel off a bit of the potato and see what colour it is inside. — /vi/ **2** to peel off. *ʕig-garɦ' qaʃar li-waɦd-u* the scab came off the wound by itself. **3** to become healthy-looking, put on a glow. - vn *qaʃr, qaʃaraan*; ava *qaaʃir*; pva *maqʃuur*.

قشر *qiʃr* /coll n/ **1** (natural) outer skin or layer. *qiʃr' baṣal* onion skin. *qiʃr' samak* fish scale(s). ‖*bi-yimʃi ɛala qiʃr' beeḍ* (he walks on eggshells) ≈ he's too pernickety about things. - *qiʃr' bayaaḍ* Lates niloticus, a type of perch found in the Nile. **2** dandruff.

قشرة *qiʃra* /n pl *-aat, quʃuur*/ **1** unit noun of *qiʃr*. *qiʃrit burtuqaan* a piece of orange peel. ‖*qiʃrit il-ʕarḍ* the earth's crust. - *qiʃrit looɦ* and *qiʃrit ẓind [butcher]* shoulder cut. - *ya daaxil been il-baṣala w-qiʃrit-ha ma-ynuub-ak ʕilla ṣannit-ha [prov]* (you who get between the onion and its skin will only be rewarded by its filthy smell) ≈ don't interfere in others' affairs for you will only cause trouble for yourself. **2a** wood veneer. *ɛamalt il-ʕooḍa b-qiʃra* I had the suite made with veneer. **2b** metal (especially gold) plating. *ʕaswira qiʃra* a gold-plated bracelet. *ʕil-xaatim da miʃ ɦaaga - qiʃra bass* that signet ring isn't much to speak of - it's only plated stuff.

قشراية *qiſraaya* /n pl *-aat*/ a piece of peel.
مقشرة *maqſara* /n pl *maqaafir, maqaafir*/ peeler.
قشر *qaſſar* **1** /vt/ to remove the natural outer layer (e.g., peel, hull, skin) of. *hiyya mqaſſara l-manga* she has peeled the mangoes. *ſil-makana bi-tqaſſar ir-ruzz* the machine husks rice. ‖*qaſſar-haa-li* he handed it to me peeled (i.e. having done all the preparation, on a silver platter). - *ſik-koora gat-li mqaſſara* the ball came to me nicely set up (for a play). - *(laqit-u) beeda mqaſſara* (she found him) a push-over. **2** /vi/ to peel. *gild-i bi-yqaſſar* my skin is peeling. *ſil-burunz id-dahabi qaſſar min il-birwaaz* the gilt has peeled off the frame. - vn *taqſiir, taqſiir*; ava/pva *miqaſſar*.
اتقشر *ſitqaſſar* /vi/ passive of *qaſſar*. - iva *mitqaſſar*.

ق ش ش [1]

قش *qaſſ[1]* *(u)* /vt/ **1** to sweep up, sweep away. *quſſ il-waraq illi wiqiɛ mif-fagar* sweep up the leaves that have fallen from the trees. ‖*dahya tquſſ-u-hum* ≈ may disaster take them! **2** to sweep out, sweep clean. ‖*ſil-ħaraami qaſſ il-beet* the thief stripped the house bare. - *ſil-waad yiquſſ* jack-takes-all (alternative name for the card game *baṣra* q.v.) — /vi/ **3** to sweep. *quſſ[i] taħt it-tarabeeza* sweep under the table! - vn *qaſſ, qaſaſaan*; ava *qaafif*; pva *maqſuuf*.
قش *qaſſ[2]* /coll n/ **1** straw. **2** dry rubbish, sweepings.
قشة *qaſſa* /unit n, pl *-aat*/ a straw, piece of straw. ‖*xiyaar qaſſa* type of gherkin. - *ɛala ɛeen-ak qaſſa [children]* ≈ you're exposed, your private parts are showing.
قشاية *qaſſaaya* = *qaſſa*. *ſil-ɣarqaan yitɛallaq fi-qaſſaaya* a drowning man will clutch at a straw.
قشاش *qaſſaaf* /adj/ slow, stopping at every station (of a train).
مقشة *miqaſſa* /n pl *-aat*/ broom.
اتقش *ſitqaſſ* /vi/ **1** to be swept away. **2** to be swept clean. - iva *mitqaſſ*.
انقش *ſinqaſſ* = *ſitqaſſ*. - iva *minqaſſ*.
قشش *qaſſif* **1** /vt/ to rob, clean out. *qaſſifuu-ni fik-kutfiina* they cleaned me out at cards. **2** /vi/ to gather straw or sweepings, collect dry rubbish. ‖*qaſſif ɛala mayyit-ak tisxan [prov]* (gather straw for (the fire under) your water and it will heat) ≈ take care of your affairs if you want them to flourish. - vn *taqſiif*; ava/pva *miqaſſif*.
اتقشش *ſitqaſſif* /vi/ passive of *qaſſif*. - iva *mitqaſſif*.

ق ش ش [2]

قش *qiff* /n/ <T *kıç*> *[naut]* stern, after-end of a ship. *kawirtit il-qiff* the afterdeck.

ق ش ط [1]

قشط *qaſaṭ* *(u)* /vt/ **1** to scrape off. *ſuqſuṭ il-buuya* scrape off the paint! **2** to skim off. *ſuqſuṭi r-riim min il-maraqa* clear the scum from the broth. *qaſaṭt il-qiſta* I skimmed off the cream. **3a** *[metal]* to mill. **3b** *[carp]* to plane. **4** to cut or sharpen (a reed pen). - vn *qaſṭ, qaſaṭaan*; ava *qaafiṭ*; pva *maqſuuṭ*.
قشطة *qiſta* /n/ **1a** *[rur]* cream, sour cream. **1b** clotted cream. ‖*ṣabaaħ il-qiſta* a very good morning to you! - *sayyid qiſta* hippopotamus. **2** /coll n/ custard apple(s).
قشطاية *qiſtaaya* /unit n, pl *-aat*/ a custard apple.
مقشط *maqſaṭ* /n pl *maqaafiṭ*/ long slender knife used to sharpen reed pens.
مقشطة *maqſaṭa* /n pl *maqaafiṭ*/ **1** *[metal]* milling machine. **2** *[carp]* planing machine.
اتقشط *ſitqaſaṭ* /vi/ passive of *qaſaṭ*. - iva *mitqiſiṭ*.
انقشط *ſinqaſaṭ* = *ſitqaſaṭ*. - iva *minqiſiṭ*.
قشط *qaſſaṭ* /vt/ **1** to scrape off. **2a** *[metal]* to mill. **2b** *[carp]* to plane. **3** to rob, strip (one) of one's belongings. *ſin-naas dool qaſſaṭuu-na* those people robbed us blind! - vn *taqſiiṭ*; ava/pva *miqaſſaṭ*.
اتقشط *ſitqaſſaṭ* /vi/ passive of *qaſſaṭ*. - iva *mitqaſſaṭ*.

ق ش ط [2]

قشاط *qusaaṭ, qisaaṭ* /n/ **1** /coll n/ pieces, counters, men (in, e.g., backgammon, dominoes). **2** /unit n, pl *-aat, qusúṭa, qisíṭa, ſiqſiṭa*/ a piece, a counter, a man (in, e.g., backgammon, dominoes, chess). **3** /pl *-aat*/ leather strap.
قشاطة *qusaaṭa, qisaaṭa* = *qusaaṭ* 2.

ق ش ع

قشع *qaſaɛ* *(a)* /vt/ to drive away, kick out. - vn *qaſaɛaan*; ava *qaafiɛ*; pva *maqſuuɛ*.
اتقشع *ſitqaſaɛ* /vi/ **1** to be driven away. **2** to clear off. - ava/iva *mitqiſiɛ*.

ق ش ع ر

قشعر *qaſɛar* **1** /vt/ to give goose pimples to, cause to shiver. *ħiss-u bi-yqaſɛar-ni* his voice sends shivers down my spine. **2** /vi/ to get goose pimples, shiver. *ſil-manzar xallaa-ni ſaqaſɛar* the sight made my flesh creep. - vn *qaſɛara*; ava/pva *miqaſɛar*.

ق ش ف

قشفة *qiffa* /n pl *qifaf*/ crust (of bread), rind (of hard cheese).
قشف *qaſaf* /n/ chapping, roughening.
قسفة *qaſafa* /n pl *-aat*/ a small area of chapped skin.

قشفاية *qaʃafaaya* = *qaʃafa*.
فشف *qaʃʃif* **1** /vt/ to chap. *ʃil-bard' qaʃʃif ʃiday-ya* the cold weather chapped my hands. **2** /vi/ to chap, become chapped. ‖*raagil miqaʃʃif* a scruffy-looking man. - vn *taqʃiif*; ava/pva *miqaʃʃif*.
تقشف *taqaʃʃuf* /n/ austerity (of life-style).

ق ش ف ر
قسفر *qaʃʃar* /vt/ *[slang]* to relieve (s.o.) of (all) money. *qaʃʃart iz-zibuun* I took the customer to the cleaner's. - also *ʃaʃʃar*. - vn *qaʃʃara*; ava/iva *miqaʃʃar*.
اتقسفر *ʃitqaʃʃar* /vi/ passive of *qaʃʃar*. - iva *mitqaʃʃar*.

ق ش ڤ ش
فشفس *qaʃqiʃ* /vt/ **1** to gather bits and pieces, collect bits of straw (for, e.g., fire). *daayir yiqaʃqiʃ luqma hina luqma hnaak* he goes around scavenging - (picking up) a bit here, a bit there. **2** to sweep away. *qaʃqiʃu kull illi ḫilt-ı* they took all I possessed. - vn *qaʃqaʃa*; ava *miqaʃqiʃ*.
اتقسفس *ʃitqaʃqiʃ* /vi/ passive of *qaʃqıʃ*. - iva *mitqaʃqiʃ*.

ق ش ل
قسلان *qaʃlaan* /adj */ broke, penniless.
قشل *qaʃal* /n/ pennilessness, penury.
قشّل *qaʃʃil* **1** /vt/ to render destitute or penniless. *miraat-u mqaʃʃilaa ʃawwil bi-ʃawwil* his wife keeps him steadily broke. **2** /vi/ to become broke, become penniless. - vn *taqʃiil*; ava/pva *miqaʃʃil*.
اتقشّل *ʃitqaʃʃil* /vi/ passive of *qaʃʃil* 1. - iva *mitqaʃʃil*.

ق ش ل ا ق
قسلاق *quʃlaaq* <T *kışlak*> /n pl *-aat*/ *[mil]* barracks. *ḥabs' quʃlaaq [mil]* confinement to barracks.

ق ش م
قسيم *qaʃiim* /n/ frizzled bits which remain after fat (especially sheep's tail) is rendered down and strained off for cooking (eaten with bread).

ق ش ن see ق ش ا ن : *qiʃaani*

ق ص ا ج
قصاج *quṣaag* <T *kısaç*> /n pl *-aat*/ (watchmaker's) pliers, pair of pincers.

ق ص ب
قصب *qaṣab* /coll n/ **1a** sugar cane. **1a** (loosely) cane, reed(s). **2** gold or silver thread, (loosely) gold braid, gold brocade.
قصبة *qaṣaba* /n pl *-aat, ʃaqṣaab, ʃiqṣaab, qiṣaab*/ **1** /unit n/ a piece of sugar cane, a reed. ‖*gat-ak qaṣaba* ≈ may you be impaled! **2** any of various objects resembling a piece of cane. *qaṣabit (ir-rigl)* (1) shin-bone. (2) cannon bone. *qaṣabit burquɛ [obsol]* metal (usually gold) nose-piece of a face-veil (see Pl.F, 7). **3** linear measure equal to 3.55 metres.
قصّابيّة *qaṣṣabiyya* /n pl *-aat, -aat*/ **1** *[agric]* sled-like implement drawn by an animal and used to skim off top-soil (see Pl.D, 7). **2** nose-piece of a camel halter.
قصّب *qaṣṣab* /vt/ **1** to skim top-soil off (land) with an *qaṣṣabiyya*. **2** to measure (land) in 3.55 metre lengths. - vn *taqṣiib*; ava/pva *miqaṣṣab*.
اتقصّب *ʃitqaṣṣab* /vi/ **1** to be skimmed with an *qaṣṣabiyya* (of land). **2** to be measured in 3.55 metre lengths. - iva *mitqaṣṣab*.

ق ص ج see ق ص ا ج : *quṣaag*

ق ص د
قصد *qaṣad (u)* /vt/ **1** to intend, mean. *bi-yuqṣud ʃeeh* what does he mean? *ma-qaṣadt'-ʃ ḫaaga* I had no (evil) intention. - /as preverb/ *ma-qaṣadt'-ʃ ʃazaɛɛal-hum* I didn't mean to upset them. **2a** to go in the direction of, aim for. *qaṣad beet-u* he made for his house. **2b** to make an approach to (s.o.). *qaṣad-ni f-naṣiiḥa* he came to me for advice. - vn *qaṣd, qaṣadaan*; ava *qaaṣid*; pva *maqṣuud*.
قصد *qaṣd* /n/ intention, purpose. *qaṣd-ak ʃeeh biz-zabṭ* what exactly are you getting at? ‖*bi-qaṣd' ʃinn* ... in order that .... - *bil-qaṣd* intentionally, on purpose. - *bi-duun qaṣd* unintentionally. - *ʃil-qaṣd* in short, to be brief.
قصاد *quṣaad* /prep/ **1** opposite, across from. *ʃig-gaar illi saakin quṣadna* the neighbour living across from us. **2** in return for, in exchange for. *xadt' xamsiin qirf' quṣaad il-xidma lli ɛamalt'-haa-lu* I got fifty piastres for the service I did him. ‖*di quṣaad di* tit for tat.
قصيد *qaṣiid*↑*: beet il-qaṣiid* the main point, the essence.
قصيدة *qaṣiida* /n pl *qaṣaayid*/ poem. ‖*ʃawwıl il-qaṣiida kufr* ≈ it's off to a bad start!
مقاصد *maqaaṣid: rabb-i-na ynaggaḥ maqaṣd-ak [beggars]* God grant you success in your aims!
اتقصد *ʃitqaṣad* /vi/ to be approached (for some purpose). *ʃitqaṣad fi-gmiil* he was asked for a favour. - iva *mitqiṣid*.
انقصد *ʃinqaṣad* = *ʃitqaṣad*. - iva *mınqiṣid*.
اتقصّد *ʃitqaṣṣad* /vt/ to single out for harassment, plague. *ʃil-mudarrıs dayman mitqaṣṣad-ni* the teacher is

always picking on me. - ava *mitqaṣṣad*.

اقتصد *ʔiqtaṣad*↑ /vi/ to economize. *ʔiqtaṣad fi-maṣariif-u* he cut back his spending. - vn *ʔiqtiṣaad*; ava *muqtaṣid*.

اقتصاد *ʔiqtiṣaad* /n/ **1** economy. *ʔiqtiṣaad il-balad* the economy of the country. **2** economics. *bi-yidris ʔiqtiṣaad* he's studying economics.

اقتصادى *ʔiqtiṣaadi* /adj */ **1** economical. *ɛarabiyya qtiṣadiyya* an economical car. **2** economic. *mafaakil ʔiqtiṣadiyya* economic problems.

استقصد *ʔistaqṣad* = *ʔitqaṣṣad*. - vn *ʔistiqṣaad*; ava *mistaqṣad*.

ق ص د ى ر

قصدير *qaṣdiir* <Gr *kassiteros*> /n/ **1** soldering alloy (made up of two parts lead and one part tin). **2** tin. - also *qazziir*.

ق ص ر [1]

قصر *qiṣir, quṣur (a)* /vi/ to become short, shorten. *ʔin-nahaar bi-yiqṣar fif-fita* the daytime shortens in winter. - vn *quṣr*; ava *qaaṣir*.

قصر *qaṣar (i)* **1** /vt/ to limit, cause to fall short. *qaṣart[i] rigl-i ɛanhum* (or *min ɛanduhum*) I didn't visit them. *qaṣar if-farr* he didn't let the trouble develop. **2** /vi/ to become reduced (of liquid, from evaporation). *ʔil-maraqa qaṣarit min il-ɣaliyya* the broth has boiled down. - vn *qaṣr, quṣr*; ava *qaaṣir*; pva *maqṣuur*.

¶ *qaṣar li-* (1) to put on a short leash, limit the freedom of action of. (2) to be brusque or curt with (s.o.).

قصر *quṣr* /n/ shortness. *quṣr[i] deel (ya ʔazɛar) [prov]* ≈ sour grapes. ‖ *quṣr ik-kalaam* and *quṣr-u* ≈ to cut a long story short.

قاصر *qaaṣir* /n * and pl *quṣṣar*/ *[leg]* minor.

مقصورة *maqṣuura* /n/ enclosure to which only a specific category of spectators is admitted (e.g., that containing the best seats in a stadium, the reviewing box at a parade, section for women in a mosque). *ʔil-maqṣuura l-malakiyya* the royal box (e.g., in a theatre).

قصور *quṣuur* /n/ negligence, laxness.

قصير *qaṣiir, qaṣiir*↑ /adj pl *quṣaar*/ = *quṣayyar*. ‖ *gab-ha min qaṣir-ha* to cut the matter short, as in *badal ma yḍayyaɛ waqt-u gab-ha min qaṣir-ha w-dafaɛ* rather than waste his time he cut things short and paid.

قصيّر *quṣayyar* /adj * and pl *quṣaar*/ short. *naẓar quṣayyar* short sight.

أقصر *ʔaqṣar* /el/ shorter/shortest.

اتقصر *ʔitqaṣar* /vi/ passive of *qaṣar*. - iva *mitqiṣir*.

انقصر *ʔinqaṣar* = *ʔitqaṣar*. - iva *minqiṣir*.

قصّر *qaṣṣar* /vt/ **1** to shorten. *ʔil-fustaan ɛaayiz taqṣiir* the dress needs shortening. ‖ *qaṣṣar raqabt(-u)* to cause (s.o.) to lose dignity, as in *suquuṭ-u qaṣṣar riqabt-i quddaam in-naas* his failing (the exams) put me to shame in front of everyone. — /vi/ **2** to become scarce, run short. *ʔil-mayya qaṣṣarit ɛandina* we've run short of water. **3** to be remiss or negligent (especially in one's obligations to one's fellow human beings). *hiyya bi-tqaṣṣar fil-waagib maɛa ɛelit-ha* she neglects her family obligations. **4** to fail to pass or graduate. *huwwa qaṣṣar is-sana lli faatit* he flunked last year. - vn *taqṣiir*; ava *miqaṣṣar*.

اتقصّر *ʔitqaṣṣar* /vi/ to be shortened (of a dress, a rope etc.). - iva *mitqaṣṣar*.

اقتصر *ʔiqtaṣar* /vi/ **1** to limit oneself, restrict oneself. *ʔiqtiṣir ɛanhum* keep away from them! ‖ *ʔil-iqtiṣaar ɛibaada [prov]* keeping oneself to oneself is (tantamount) to worship (of God). **2**↑ to be limited, be restricted. *ʔil-ḥafla qtaṣarit ɛala l-qaraayib* the party was restricted to relatives. - vn *ʔiqtiṣaar*; ava *miqtiṣir*.

استقصر *ʔistaqṣar* /vt/ **1** to consider (too) short. *rafaḍit tiggawwiz-u ɛafaan mistaqṣaraa* she refused to marry him because she thought him too short. **2** to select for shortness. - vn *ʔistiqṣaar*; ava *mistaqṣar*.

[2] (ق ص ر)

قصر *qaṣr* /n pl *quṣuur*/ palace. ‖ *ʔil-qaṣr* or *qaṣr il-ɛeeni* Kasr el-Aini, a large government teaching hospital.

قصريّة *qaṣriyya* /n pl *-aat, qaṣaari*/ **1** flower or plant pot. **2** chamber-pot, bedpan.

الأقصر *ʔil-ʔuqṣur, l-uqṣur* /prop n/ Luxor.

ق ص ر م ل

قصرمل *quṣrumill, quṣrimill* /n/ mortar made of ashes, dirt, lime and sand.

ق ص ص [1]

قصّ *qaṣṣ[i] (u)* /vt/ **1** to cut. *qaṣṣ-i-li nigma waraq* he cut me out a paper star. *qaṣṣeet faɛr-i* (1) I had my hair cut. (2) I cut my (own) hair. ‖ *makaroona maqṣuuṣa* macaroni. - *quṣṣ (ik-kutfiina)* cut the cards! - *qaṣṣ[i] min* ... to deduct from (s.o.'s salary etc.), as in *bi-yquṣṣu min mahiyyit-u mablaɣ kibiir* they deduct a large sum from his salary. **2** to shear, clip. *bi-yiigi marriteen fis-sana yquṣṣ il-xeel* he comes twice a year to clip the horses. - vn *qaṣṣ, qaṣaṣaan*; ava *qaaṣiṣ*; pva *maqṣuuṣ*.

قصّة *qaṣṣa* /pl *-aat*/ instance noun of *qaṣṣ*. *quul lil-ḥallaaq il-qaṣṣa lli-nta ɛawiz-ha* tell the barber the kind of cut you want.

مقصوص *maqṣuuṣ* /n pl *maqaṣiiṣ*/ lock of hair in front of the ear, pin curl in front of the ear (properly affected in traditional society only by a married woman).

مقصوصة *maqṣuuṣa* /n pl *-aat*/ broad straining spoon.
قصّة *quṣṣa* /n pl *quṣaṣ*/ **1a** hair cut over the forehead in bangs, fringe. **1b** (bird's) cere. **2** brow-band (of a bridle).
قصاصة *quṣaaṣa* /n pl *-aat*/ small bit or scrap (usually of paper).
قصّاص *qaṣṣaaṣ*[1] /n */ clipper, one who shears animals.
مقصّ *maqaṣṣ* /n pl *-aat*/ **1** pair of scissors. *maqaṣṣ' mfarfar* (1) pinking shears. (2) thinning scissors. **2a** any of various implements which operate like a pair of scissors (e.g., crucible tongs). *maqaṣṣ' makwa* curling (or straightening) tongs. **2b** any of various shapes resembling an open pair of scissors (e.g., crossed staff and sword insignia worn by a major-general or brigadier-general). **3** *[mech]* shears (apparatus for hoisting heavy weights). **4** *[soccer]* angle formed by the top of the goal frame and the side post. **5** tripping technique. *xad-ni maqaṣṣ* he tripped me.
مقصّي *maqaṣṣi* /adj */ scissored, scissor-style. *ʃiṭ-ṭariiqa l-maqaṣṣiyya fil-wasb il-ɛaali* the scissor-style high jump.
انقصّ *ʃitqaṣṣ*[1] /vi/ **1** to be cut. **2** to be sheared, be clipped. - iva *mitqaṣṣ*.
انقصّ *ʃinqaṣṣ*[1] = *ʃitqaṣṣ*[1]. - iva *minqaṣṣ*.
قصّص *qaṣṣaṣ* /vt/ **1** to cut up (in pieces). *laqeet il-waad miqaṣṣaṣ fustaan-i* I found the kid had cut up my dress! **2** to pluck (feathers from live fowl to prevent their flying). - also *qaṣqaṣ*. - vn *taqṣiiṣ*; ava/pva *miqaṣṣaṣ*.
اتقصّص *ʃitqaṣṣaṣ*[1] /vi/ passive of *qaṣṣaṣ*. - iva *mitqaṣṣaṣ*.

ق ص ص [2]

قصّ *qaṣṣ*[2] *(i)* /vt/ to tell, recount (a story, anecdote etc.). *qaṣṣ*[a] *ɛalayya kull il-mawquuɛ* he told me the whole story. - ava *qaaṣiṣ*.
قصّة *qiṣṣa, qiṣṣa*↑ /n pl *qiṣaṣ, qiṣaṣ*/ story, tale. || *ʃeeh qiṣṣit-ak* what's the matter with you?
انقصّ *ʃitqaṣṣ*[2] /vi/ to be told, be recounted. - iva *mitqaṣṣ*.
انقصّ *ʃinqaṣṣ*[2] = *ʃitqaṣṣ*[2]. - iva *minqaṣṣ*.
اتقصّص *ʃitqaṣṣaṣ*[2] **1** /vt/ to seek out information about (s.o. or s.th.). *bi-nitqaṣṣaṣ ʃaxbaar il-ɛaduw* we try to find out secretly all about the enemy. **2** /vi/ to spy out. *ʃibɛat waaḥid yitqaṣṣaṣ ɛaleehum* send someone to keep (secret) watch on them. - ava *mitqaṣṣaṣ*.

ق ص ص [3]

قصّص *qaṣṣ*[3] *(u)* /vt/ to follow (a track). *ʃil-badw' mafhuriin bi-qaṣṣ il-ʃasar* the bedouin are famous for tracking. - vn *qaṣṣ, qaṣaṣaan*; ava *qaaṣiṣ*.
قصّاص *qaṣṣaaṣ*[2]: *qaṣṣaaṣ ʃasar* /pl *qaṣṣaṣiin ʃasar*/ tracker.
اتقصّ *ʃitqaṣṣ*[3] /vi/ to be followed, (of a track). - iva *mitqaṣṣ*.

ق ص ص [4]

قصاص *qiṣaaṣ* /n/ punishment, penalty (particularly hanging for murder).
اقتصّ *ʃiqtaṣṣ* /vi/ to exact punishment. *rabb-i-na yiqtaṣṣ' minhum ɛa-lli ɛamaluu fiina* may God punish them for what they did to us! - iva *miqtaṣṣ*.

ق ص ع

قصع *qaṣaɛ (a)* /vt/ **1** to sprain. *qaṣaɛt' rigl-i* I sprained my ankle. *ʃil-hudr' qaṣaɛ rigl-i* the fall sprained my ankle. **2** to bend (part of the body), cock (the head) to one side. *qaaɛid maqṣuuɛ ɛak-kursi* sitting sprawled on the chair. || *qaṣaɛit id-diḥka* she laughed saucily. — /vi/ **4** to be or become excessive (of sweetness or saltiness in food). *ḥuduqiyyit ir-ruzz' qaṣaɛit* or *ʃir-ruzz' qaṣaɛ bil-ḥuduqiyya* the rice was very salty. - vn *qaṣɛ, qaṣaɛaan*; ava *qaaṣiɛ*; pva *maqṣuuɛ*.
قصعة *qaṣɛa* /n pl *-aat, quṣaɛ*/ **1** instance noun of *qaṣɛ*. **2** bowl or basin without a base (especially that used to carry mortar). || *qaṣɛit is-sarg* the seat of the saddle. **3** sound box, body of a musical instrument. *qaṣɛit ɛuud* belly of a *ɛuud* (see Pl.J, 15).
اتقصع *ʃitqaṣaɛ* /vi/ passive of *qaṣaɛ*. - iva *mitqiṣiɛ*.
اتقصّع *ʃitqaṣṣaɛ* /vi/ to move one's body voluptuously. *mafya titqaṣṣaɛ* she walks along swinging her hips. - vn *taqṣiiɛ*; ava *mitqaṣṣaɛ*.

ق ص ف

قصف *qaṣaf (u)* /vt/ to snap (in two), break (off). *qaṣaf il-qalam* he broke the pencil. || *ʃil-moot qaṣaf fabaab-u* death cut him down in his prime. - *(ʃallaah) yuqṣuf ɛumr-ak* ≈ God strike you dead! - *waad maqṣuuf ir-raqaba* brat, devil of a kid. - vn *qaṣf, qaṣafaan*; ava *qaaṣif*; pva *maqṣuuf*.
قصّافة *qaṣṣaafa* /n pl *-aat*/ **1** pair of heavy-duty shears, pair of wire or cable cutters. **2** pair of clippers. *qaṣṣaafit ḍawaafir* nail clippers.
اتقصف *ʃitqaṣaf* /vi/ to be snapped (in two), be broken (off). - iva *mitqiṣif*.
انقصف *ʃinqaṣaf* = *ʃitqaṣaf*. - iva *minqiṣif*.
قصّف *qaṣṣaf* /vt/ to cause to be broken (completely or successively). *ʃil-makwa bi-tqaṣṣaf if-faɛr* using curling tongs breaks the hair. - vn *taqṣiif*; ava/pva *miqaṣṣaf*.
اتقصّف *ʃitqaṣṣaf* /vi/ to be broken (off, completely or successively). - iva *mitqaṣṣaf*.

ق ص ق ص

قصقص *qaṣqaṣ* /vt/ **1a** to snip into small pieces. **1b** to trim, clip. *qawafir-ha mqaṣqaṣa* her nails are trimmed. **2** to pluck (feathers) from live fowl to prevent their flying. ‖*qaṣqaṣi ʈeer-ik la yluuf bi-ɤeer-ik [prov]* clip your bird's wings if you want him to stay home (advice to women to keep their husbands short of money). - also *qaṣṣaṣ*. - vn *qaṣqaṣa*; ava/pva *miqaṣqaṣ*.

قصقوصة *qaṣquuṣa* /n pl *qaṣaqiiṣ*/ strip or scrap (usually of cloth).

اتقصقص *ʕitqaṣqaṣ* /vi/ passive of *qaṣqaṣ*. - iva *mitqaṣqaṣ*.

ق ص ل

قصل *qaṣal* = *qaṣala*.

قصلة *qaṣala* /coll n/ knotty parts of stalks of wheat and barley separated out during winnowing and used for fuel.

قصلاية *qaṣalaaya* /pl *-aat*/ unit noun of *qaṣala*.

مقصلة *maqṣala* /n pl *maqaaṣil*/ guillotine.

ق ص و ل

قصول *qaṣwal* /vt/ **1** to deduct unjustly from (a sum of money). **2** to rob, ruin (s.o.) financially by cheating. - vn *qaṣwala*; ava/pva *miqaṣwal*.

اتقصول *ʕitqaṣwal* /vi/ passive of *qaṣwal*. - vn *tiqaṣwiil*; iva *mitqaṣwal*.

ق ص ى

أقصى *ʔaqṣa, ʔaqṣa* /el/ more/most extreme. *ʔana zaʕlaan minnu l-ʔaqṣa ḥadd* I am as angry as can be with him. ‖*ʔil-masgid il-ʔaqṣa* the principal mosque in Jerusalem. - *ʔif-farq il-ʔaqṣa* the Far East. - *ʔil-maɤrib il-ʔaqṣa* Morocco.

اتقصّى *ʔitqaṣṣa* /vt/ to investigate thoroughly, make a thorough enquiry about. *dayman yitqaṣṣa l-ʔaxbaar* he always enquires extensively about the news. - ava *mitqaṣṣi*.

استقصى *ʔistaqṣa* /vt/ to investigate thoroughly, make a thorough inquiry about. *ruuḥ istaqṣa ʔaxbar-hum* go and make thorough inquiries about them. - vn *ʔistiqṣa*; ava *mistaqṣi*.

¶ *ʔistaqṣa ʕan* to inquire about or into, as in *qaʕadna mudda nistaqṣa ʕan beet-u* we spent a lot of time trying to find out where he lived.

ق ض ب

قضيب *qaḍiib* /n pl *quḍbaan*/ **1a** metal rod, bar. *qaḍiib il-qaṭr* rail (of a railway). **1b** railing. **2** *[text]* **2a** hank of about five-hundred cotton threads. **2b** twill stripe. **3** *[euphem]* penis.

قضّب *qaḍḍab* /vt/ to strip (s.th.) bare. ‖*ʔil-ʕiyaal if-faḥr[i] da qaḍḍabuu-ni* the children left me flat broke this month. - vn *taqḍiib*; ava/pva *miqaḍḍab*.

اتقضّب *ʔitqaḍḍab* /vi/ to be stripped bare. - iva *mitqaḍḍab*.

ق ض ض

انقضّ *ʔinqaḍḍ, ʔinqaḍḍ↑* /vi/ to pounce. *ʔil-buliis inqaḍḍ[a] ʕala l-ḥaramiyya* the police pounced on the thieves. - vn *ʔinqiḍaaḍ*; ava *minqaḍḍ*.

ق ض ى

قضى *qaḍa[1] (i)* /vt/ **1** to attend to, carry out. *ʈalab-ak maqḍi* your request is taken care of. *bi-tiqḍi miʃwaar* she's on an errand. *ʔaqḍi ḥagt-i b-ʔiid-i wala ʔaquul lil-kalb[i] ya siid-i [prov]* ≈ better help yourself than grovel for a dog's help. **2** to spend (time). *qaḍeena fahr[i] b-ʈuul-u f-bariis* we spent a whole month in Paris. **3** *[Isl]* to compensate for, make up for (a missed religious obligation). - vn *qaḍa, qaḍayaan*; ava *qaaḍi*; pva *maqḍi*.

¶ *qaḍa ʕala* to make an end of. *qaḍa ʕal-ʔakl* he polished off the food. *qaḍeet ʕalee* I finished him off, I did him in. ‖*ḍarba qaḍya* knockout (blow).

قضاء *qaḍa[2]* /n/ **1** fate. ‖*qaḍa ʔaxaff[i] min qaḍa* ≈ (1) it could have been worse. (2) the lesser of two evils. **2** judicature. **3** *[Isl]* compensation for missed prayer or fasting.

قضاء *qaḍaaʔ* /n/ **1** fate. ‖*qaḍaaʔ wi-qadar* as a matter of fate, as an act of God, as in *ʔil-ḥadsa ḥaṣalit qaḍaaʔ wi-qadar* the accident was totally unavoidable. **2** judgement. ‖*ʔil-qaḍaaʔ il-ʕaali* the High Court. **3** jurisprudence.

قضائى *qaḍaaʔi↑* /adj */ judicial. *ʔiḍ-ḍabṭ il-qaḍaaʔi [leg]* the right of apprehension.

قاضى *qaadi* /n pl *quḍaah*/ judge. *ʔil-faadi yiʕmil qaadi [prov]* ≈ idle people occupy themselves by interfering in others' affairs. ‖*luqmit il-qaadi* see *luqma*.

قضيّة *qaḍiyya* /n pl *qaḍaaya, qawaaḍi*/ law-suit, court case.

مقضى *muqḍa: ma-fii-ʃ waraa muqḍa ḥaaga* you can't get (him) to do anything.

اتقضى *ʔitqaḍa* /vi/ passive of *qaḍa[1]*. - iva *mitqiḍi*.

انقضى *ʔinqaḍa* /vi/ **1** = *ʔiqaḍa*. **2** to elapse. *ʔil-ḥikaaya di nqaḍa ʕaleeha ktiir* that affair is way in the past. - ava/iva *minqiḍi*.

قضّى *qaḍḍa* /vt/ **1** to attend to, carry out. *qaḍḍa maṣlaḥit-hum* he attended to their interests. **2** to spend

(time). *qaḍḍa sanateen fiṣ-ṣaḥra* he spent two years in the desert. **3** to suffice for. *ʕil-qumaaʃ ḥa-yqaḍḍi fustaan* the material will be enough for a dress. *ʕil-filuus miʃ miqaḍḍiyyaa-ni* the money does not meet my needs. — /vi/ **4** to last, suffice. *ʕil-mayya miʃ ḥa-tqaḍḍi l-bukra* the water won't be enough to last until tomorrow. - vn *taqḍiyya*; ava/pva *miqaḍḍi*.

اتقضى *ʔitqaḍḍa* /vi/ passive of *qaḍḍa*. - iva *mitqaḍḍi*.

قاضى *qaaḍa* /vt/ to arraign (s.o. before a judge). *ʕana ḥ-aqaḍii-k quddaam il-maḥkama* I'll take you to court. - vn *miqaḍiyya*; ava *miqaaḍi*.

اتقاضى *ʔitqaaḍa* /vi/ to be arraigned. - iva *mitqaaḍi*.

اقتضى *ʔiqtaḍa* /vt/ to require. *bi-yiqtiḍi fuṣl' ktiir* it calls for a lot of work. - ava *miqtiḍi*.

مقتضى *muqtaḍa: bi-muqtaḍa* according to, in accordance with.

مقتضيات *muqtaḍayaat, muqtaḍayaat* /pl n/ requirements, needs. *ḥasab muqtaḍayaat il-ʕaḥwaal* according to the dictates of circumstances.

استقضى *ʔistaqḍa* /vt/ **1** to acquire. *raaḥit tistaqḍa xuḍaar mis-suuq* she went to get vegetables from the market. **2** to prevail upon (s.o.) to do (s.th.). *m-aqdar-ʃ astaqḍaa ḥaaga* I can't get him to do anything. - vn *ʔistiqḍa*; ava *mistaqḍi*.

ق ط ا ن

قيطان *qiṭaan, qiṭaan* <T *kaytan*> /n pl *qiṭína*/ cord, piping, edging.

ق ط ب ¹

قطب *qaṭab (u)* /vt/ **1** to make a tuck in, sew a fold in (a garment etc.). *qaṭabit deel fustan-ha ʕaʃaan tiqaṣṣar-u* she made a tuck in the hem of her dress to make it shorter. **2** to section off. *mumkin nuqṭub ḥitta mil-ʕooḍa w-niʕmil-ha maxzan* we can section off a part of the room and make it a store. - vn *qaṭb, qaṭabaan*; ava *qaaṭib*; pva *maqṭuub*.

¶ *qaṭab ʕala* to corner, harass. *ʕana ʃuft-ak lamma qaṭabt" ʕal-bint' fiʃ-ʃaariʕ* I saw you when you cut in on the girl in the street.

قطبة *qaṭba* /n pl *-aat*/ **1** fold, tuck (in a garment etc.). *ʕaʃaan ṭṭawwṭli l-fustaan fukki qaṭbit id-deel* in order to make the dress longer, let down the hem. **2** sectioned-off part (e.g., of a room).

اتقطب *ʔitqaṭab* /vi/ passive of *qaṭab*. - iva *mitqiṭib*.

انقطب *ʔinqaṭab* = *ʔitqaṭab*. - iva *minqiṭib*.

قطّب *qaṭṭab* /vt/ **1** to sew folds in (e.g., several garments). ‖ *qaṭṭab ḥawagb-u* he knitted his eyebrows. **2** to section off parts in (several rooms). **3** to patch (a wall) with plaster. *sadd iʃ-ʃanaayiʃ wi-qaṭṭab il-bayaaq* he plugged up the holes in the wall and patched it with plaster. — /vi/ **4** *[constr]* to put plaster patching (around a door- or window-frame, to make it flush with the wall). *ʕaawiz taqṭiib ʕala ʃ-ʃababiik* the window-frames need plaster patching. - vn *taqṭiib*; ava/pva *miqaṭṭab*.

ق ط ب ²

قطب *quṭb, quṭb* /n pl *ʕaqṭaab*/ **1** axis, pole. **2** *[Isl]* high rank in the Sufi hierarchy.

قطبى *quṭbi, quṭbi* /adj/ polar. *ʕin-nigm il-quṭbi* the Pole Star.

ق ط ر ¹

قطر *qaṭar' (u)* /vt/ **1a** to tow. *qaṭaru l-ʕarabiyya lil-warfa* they towed the car to the garage. **1b** to hitch, couple. *sawwaaq il-luuri qaṭar il-maqṭuura* the lorry-driver hitched up the trailer. **2** to trail. *ḥadd' qaṭar-ak* did anyone follow you? - vn *qaṭr, qaṭaraan*; ava *qaaṭir*; pva *maqṭuur*.

قطر *qaṭr* /n pl *quṭuraat, quṭúra*/ railway train. ‖ *fat-ha l-qaṭr* ≈ she's missed the (marriage) boat, she's on the shelf. - *faat-u l-qaṭr* he missed his chance.

مقطوره *maqṭuura* /n pl *maqaṭiir*/ **1** trailer. **2** *[coarse]* whore, hooker.

قطر *quṭr↑, quṭr↑* /n pl *ʕaqṭaar, ʕaqṭaar*/ **1** diameter. *nuṣṣ' quṭr* radius. **2** country, land. *ʕil-quṭr il-maṣri* Egypt. *gamiiʕ il-quṭr* the whole country.

قطار *qiṭaar↑* /n pl *-aat*/ railway train.

اتقطر *ʔitqaṭar'* /vi/ passive of *qaṭar'*. - iva *mitqiṭir*.

انقطر *ʔinqaṭar'* = *ʔitqaṭar'*. - iva *minqiṭir*.

قطّر *qaṭṭar'* /vt/ to tow. - vn *taqṭiir, taqṭiir*; ava/pva *miqaṭṭar*.

اتقطّر *ʔitqaṭṭar'* /vi/ to be towed. - iva *mitqaṭṭar*.

ق ط ر ²

قطر *qaṭar² (u)* **1** /vt/ to drip. *gism-i b-yuqṭur ʕaraq* my body is running with sweat. **2** /vi/ *[med]* to administer eye-drops. *xallu yuqṭur-lak mil-qaṭra di* get him to administer those eye-drops to you. - vn *qaṭr, qaṭaraan*; ava *qaaṭir*; pva *maqṭuur*.

قطرة *qaṭra* /n/ **1** /pl *-aat*/ drop. **2** /pl *quṭar*/ eye-drops.

قطّارة *qaṭṭaara* /n/ **1** (eye- or nose-) dropper. **2** *[chem]* pipette.

القطّارة *ʔil-qaṭṭaara: munxafaḍ il-qaṭṭaara* the Qattara depression, in the Egyptian western desert.

اتقطر *ʔitqaṭar²* /vi/ passive of *qaṭar²*. - iva *mitqiṭir*.

انقطر *ʔinqaṭar²* = *ʔitqaṭar²*. - iva *minqiṭir*.

قطّر *qaṭṭar²* **1** /vi/ to administer eyedrops. ‖ *bi-yqaṭṭar-li bil-qaṭṭaara* ≈ he's very stingy with me. **2** /vt/ **2a** to drip,

cause to drip. **2b** to distil. *mayya mqaṭṭara* distilled water. - vn *taqṭiir, taqṭiir*; ava/pva *miqaṭṭar*.
اتقطّر ʔitqaṭṭar[2] /vi/ passive of *qaṭṭar*[2]. - iva *mitqaṭṭar*.

ق ط ر ن

قطران *qaṭraan, qiṭraan* /n/ tar. ‖*ḥazz-i ṭiin wi-qaṭraan* my luck is rotten.
قطرن *qaṭran* **1** /vt/ **1a** to coat with tar. **1b** to cause to be awful or loathsome. *qaṭranit ʕiʃt-i* she's ruined my life! **2** /vi/ to become awful or loathsome. *mazaag-u miqaṭran* he's in a filthy mood! - vn *qaṭrana*; ava/pva *miqaṭran*.
اتقطرن ʔitqaṭran /vi/ to become or be made awful. *ʕiʃt-u tqaṭranit min yoom ma ɣawa l-qumaar* ≈ he's ruined himself since he fell for gambling. - ava/iva *mitqaṭran*.

ق ط ش

قطس *qaṭaʃ (u)* /vt/ to chop off. *fil-ḥuruub zamaan kaanu yiqṭuʃu wdaan wi-manaxiir il-ʔasra* in wars long ago they used to chop off the captives' ears and noses. - vn *qaṭʃ, qaṭaʃaan*; ava *qaaṭiʃ*; pva *maqṭuuʃ*.
أقطس ʔaqṭaʃ /adj, fem *qaṭʃa*, pl *quṭʃ*/ mutilated by amputation (particularly of ears and noses).
اتقطس ʔitqaṭaʃ /vi/ to be chopped off. - iva *mitqiṭiʃ*.
انقطس ʔinqaṭaʃ = ʔitqaṭaʃ. - iva *minqiṭiʃ*.
قطّس *qaṭṭaʃ* /vt/ to chop off (repeatedly, collectively or successively). - vn *taqṭiiʃ*; ava/pva *miqaṭṭaʃ*.
اتقطّس ʔitqaṭṭaʃ /vi/ passive of *qaṭṭaʃ*. - iva *mitqaṭṭaʃ*.

ق ط ط [1]

قطّ *qaṭṭ (u)* /vt/ **1** to nip off, cut off with a neat single movement. *yiquṭṭ il-qalam bi-zawya munasba l-nooʕ il-xaṭṭ* he cuts the (nib of the reed) pen to an angle suitable for the type of script. **2** to take a quick nip at. ‖*qaṭṭ[i] boosa min xadd-a-ha* he gave her a quick kiss on the cheek. **3** *[soccer]* to foil (an opponent's tackle) with a sudden feint. - vn *qaṭṭ, qaṭaṭaan*; ava *qaaṭiṭ*; pva *maqṭuuṭ*.
قطّة *qaṭṭa* /n pl *-aat*/ **1** instance noun of *qaṭṭ*. **2** sideburns.
مقطّ *maqaṭṭ* /n pl *-aat*/ bit of bone or stone on which the nib of a reed pen is cut.
اتقطّ ʔitqaṭṭ /vi/ passive of *qaṭṭ*. - iva *mitqaṭṭ*.

ق ط ط [2]

قطّ *quṭṭ* /n pl *quṭaṭ*/ tom cat. *ɣaab il-quṭṭ ilʕab ya faar [prov]* when the cat's away the mice will play. ‖*beeni w-beenu ma been il-quṭṭ[i] wil-faar* ≈ we're natural enemies. - *gibna f-siirit il-quṭṭ[i] ga ynuṭṭ [prov]* ≈ talk of the Devil! - *quṭṭ-u gamal [prov]* ≈ all his geese are swans.
قطّة *quṭṭa* /n pl *quṭaṭ, quṭṭaat*/ female cat, (loosely) any cat.
فطيطه *qiṭeeṭa* /n pl *qaṭaayiṭ*/ kitten. *ya qteeṭa ɣassili wiff-ik [children]* wash your face, kitty!

ق ط ع

قطع *qaṭaʕ (a)* /vt/ **1** to cut (up), tear (up). *qaṭaʕ il-ḥabl* he cut the rope. *qaṭaʕ is-sadd[a] ʕaʃaan yiftaḥ ʕal-mayya* he breached the obstruction to open the way for the water. ‖*qaṭaʕ ik-koora* to slice the ball (in ping-pong) (cf sense 3). - *qaṭaʕ ik-kutʃiina* to cut the pack (of cards). - *la yiqṭaʕ ʕirq[i] wala ysayyaḥ damm* ≈ he's indecisive. - *qaṭaʕ ziriiba [rur]* to clean up an animal pen by cutting and removing from it blocks of earth mixed with dung (for use as fertilizer). **2a** to sever and remove. *qaṭaʕu draaʕ-u* they amputated his arm. *xalli g-gazzaar yiqṭaʕ-lak kiilu laḥma* have the butcher cut you a kilo of meat. *ʔiqṭaʕ-li waraqa min id-daftar* tear me out a page from the notebook. *qaṭaʕna kull[i] waraqa ʕaleeha luṭaʕ* we plucked every leaf that had egg-clusters on it. ‖*maqṭuuʕ min ʃagara* cut off from, or without, family or friends. - *ʔiqṭaʕ lisaan-ak* shut up! **2b** *[Chr]* to excommunicate. **3** to suspend and terminate. *qaṭaʕu l-mayya ʕaʃaan taṣliiḥ iṭ-ṭurumba* they cut off the water to repair the pump. *qaṭaʕ mahiyyit-i* he cut off my salary. *ʔana ʕawza ʔaqṭaʕ il-xalaf* I want to stop having children. *qaṭaʕit il-ʔamal fi-rguuʕ-u* she's given up hope of his return. ‖*qaṭaʕ in-nafas* and *qaṭaʕ il-qalb* to leave one panting, leave one short of breath, as in *ʔik-kuḥḥa qaṭaʕit nafas-i* the cough left me panting. - *qaṭaʕ kalam-na* he interrupted our talk. - *qaṭaʕt[i] rigl-u mil-beet* I stopped him coming to the house. - *qaṭaʕ ik-koora* he intercepted the ball (cf sense 1). - *xawwif-ni xallaa-ni qaṭaʕt il-xalaf* ≈ he gave me a ball-shrivelling scare. **4a** to issue, sell (usually tickets or cloth). *ʔik-kumsari qaṭaʕ-li tazkarteen* the conductor issued two tickets for me. **4b** to buy (usually tickets or cloth). *miʃ ḥa-tiqdar tiqṭaʕ tazaakir* you won't be able to get any tickets. **4c** to buy the cloth for (a garment). *qaṭaʕt[i] gallabiyya* I bought a length of cloth for a galabiya. **5** to cover (distance, ground). *qaṭaʕna xamsiin kiilu f-yoom waaḥid* we covered fifty kilometres in one day. **6** to cost, amount to. *qaḍeet il-maʃawiir bi-taks[i] w-qaṭaʕ kitiir* I did the errands by taxi and it came to quite a bit. *ʔil-qamiiṣ qaṭaʕ gineeh* the shirt cost a pound. — /vi/ **7** to break, snap. *ʔis-silk[i] qaṭaʕ* the wire snapped. **8** to break off, terminate. *ʔil-ʔirsaal qaṭaʕ* the transmission ceased. *ʔin-nuur bi-yiqṭaʕ kull[i] ʃwayya* the electricity keeps going off. **9** to curdle (of milk). - vn *qaṭʕ*,

qaṭaɛaan, qaṭɛiyya; ava *qaaṭiɛ*; pva *maqṭuuɛ*.
¶ *qaṭaɛ nafs-u li-* to devote oneself to (s.th.). *- yiqṭaɛ ...* (God) damn ...! *yiqṭaɛ-u w-yiqṭaɛ illi gabuu* damn him and his forebears! *- quṭuɛ ...* /fem *quṭɛit*, pl *quṭɛu*/ damn ...! ... be damned! *quṭɛit il-ʕutubisaat* the buses be damned! *quṭɛit il-xilfa w-sirit-ha* to hell with this business of having children!

قطعة *qaṭɛa* /pl *-aat*/ instance noun of *qaṭɛ*. *qaṭɛit qalb* heart-break. ‖*qaṭɛa bala waṣla* (an unjoinable cut) ≈ good riddance.

قطعا *qaṭɛan*↑ **1** /adv/ decidedly, definitely. *rafaḍit qaṭɛan* she has definitely refused. **2** /interj/ certainly! of course!

قطعيّة *qaṭɛiyya* /n/ **1** cutting, method of cutting (usually of meat). *ʕig-gazzaar da qaṭɛiyyit-u mif ɛagbaa-ni* I don't like the way that butcher cuts. ‖*sikkiinit qaṭɛiyya [plumb]* wheel cutter. *- sanduuq qaṭɛiyya [carp]* mitre box, block. **2** /pl *-aat*/ *[butcher]* cut (of meat).

مقطوع *maqṭuuɛ* /n pl *maqaṭiiɛ*/ loafer, idler, wastrel. *ʕibɛid ɛanhum - dool ʃiwayyit maqaṭiiɛ* keep away from them - they're just a lot of good-for-nothings!

مقطوعه *maqṭuuɛa*↑ /n pl *-aat*/ (musical, literary etc.) composition.

مقطوعيّة *maqṭuɛiyya* /n/ piece-work (as opposed to salaried work).

قطعة *qiṭɛa, quṭɛa, qiṭɛa* /n pl *qiṭaɛ, quṭaɛ, qiṭaɛ*/ **1** part, piece. *qiṭaɛ ɣiyaar* spare parts. *quṭɛit qumaaʃ* a piece of cloth. *b-aʃtaɣal bil-qiṭɛa* I work on a piece-work basis. **2** (plant) cutting.

قطاع *qiṭaaɛ*↑ /n pl *-aat*/ sector, section. *qiṭaaɛ ɛaamm wi-qiṭaaɛ xaaṣṣ* public sector and private sector.

قطوع *qaṭuuɛ* /n pl *qawaṭiiɛ*/ **1** partition. *ʃuɣl il-banna b-yibtidi fil-ḥeṭaan wil-qawaṭiiɛ* the work of the bricklayer begins with the walls and partitions. **2** *[nav]* bulkhead.

قطيعة *qaṭiiɛa [women in trad soc]* exclamation of exasperation ≈ (oh) drat! (oh) blast! as in *qaṭiiɛa - nisiit ʕagiib filuus* oh blast! I forgot to bring any money! *qaṭiiɛa - ʕil-bint' di tʃaxxarit leeh* drat! why is this girl late?

قطّاع *qaṭṭaaɛ* /n */: *qaṭṭaaɛ ṭuruq* bandit, robber.

قطّاعى *qaṭṭaaɛi* **1** /n/ retailing. *tigaarit il-qaṭṭaaɛi* the retail trade. *bi-ybiiɛ il-biḍaaɛa bil-qaṭṭaaɛi* he sells the goods retail. **2** /adv/ off and on, in interrupted bits (as opposed to continuously, at one go). *b-aakul qaṭṭaaɛi* I grab a bite here and there, I eat my meals in bits and pieces. *bi-yiftaɣal qaṭṭaaɛi* he does his work by fits and starts, he works now and then.

مقطع *maqṭaɛ*[1] /n pl *maqaaṭiɛ*/ **1** section, passage (of music, poetry etc.). **2** measure of cloth required (to make a particular article). *maqṭaɛ gallabiyya* material enough for a galabiya. **3** cutting instrument. *maqṭaɛ waraq* letter-opener, paper-knife.

مقطع *maqṭaɛ*, *maqṭaɛ*[2] /n pl *maqaaṭiɛ, maqaaṭiɛ*/ syllable.

انقطع *ʔinqaṭaɛ* /vi/ **1** to be cut (up), be torn (up) or become cut, become torn. **2a** to be severed and removed. **2b** *[Chr]* to be excommunicated. **3** to be suspended, be terminated. *ʔil-ɛaada tqaṭaɛit ɛandaha* she stopped having her period. *ʔil-ɛilaqaat id-diblumasiyya tqaṭaɛit* diplomatic relations were cut. **4a** to be issued, be sold (usually of tickets or cloth). **4b** to be bought (usually of tickets or cloth). **5** to be covered (of distance, ground). *ʔil-masaafa tqaṭaɛit fi-yomeen* the distance was covered in two days. *- iva mitqiṭiɛ*.

انقطع *ʔinqaṭaɛ* = *ʔitqaṭaɛ*. *- iva minqiṭiɛ*.

قطّع *qaṭṭaɛ* /vt/ **1** to cut up, tear up (extensively or successively). *qaṭṭaɛu il-film* they cut a lot of the film. *baqit tusrux wi-tqaṭṭaɛ faɛr-a-ha* she started screaming and tearing her hair. ‖*qaṭṭaɛu farwit-u* they gossiped maliciously about him behind his back. *- qaṭṭaɛt' qalb-i* ≈ I'm all cut up about you! *- miqaṭṭaɛ is-samaka w-del-ha* he is committing every vice. **2a** to issue, sell (usually many tickets or many pieces of cloth). **2b** to buy (usually many tickets or many pieces of cloth). — /vi/ **3** to keep breaking down. *ʔin-nuur bi-yqaṭṭaɛ* the electricity keeps going off. *- vn taqṭiiɛ*; ava/pva *miqaṭṭaɛ*.

تقاطيع *taqaṭiiɛ (il-wiff)* /pl n/ (facial) features.

انقطع *ʔitqaṭṭaɛ* /vi/ to be or become cut up, be torn up (extensively or successively). *- ava/iva mitqaṭṭaɛ*.

قاطع *qaaṭiɛ* /vt/ **1** to interrupt. *qaṭiɛt-i-ni ɛaʃaan kida* you interrupted me for that? **2** to boycott. *qaṭɛu l-maḥallaat* they boycotted the stores. — /vi/ **3** to make a guess concerning things supposed to be known only to God (e.g., life span, future gains etc., such an act being tantamount to blasphemy). *dayman yiqaaṭiɛ ɛala rizq-u* he is always counting God's future bounty (as if he had Him in his pocket). *- also qooṭaɛ*. *- vn muqaṭɛa*; ava *miqaaṭiɛ*.

الإقطاع *ʔil-ʔiqṭaaɛ* /n/ feudalism.

إقطاعى *ʔiqṭaaɛi* /adj */ **1** feudal, feudalistic. **2** oppressive, exploitative (of a person).

إقطاعيّة *ʔiqṭaɛiyya* /n pl *-aat*/ feudal estate.

استقطع *ʔistaqṭaɛ* /vt/ **1**↑ to deduct. *bi-yistaqṭaɛ minnu l-ʔugra* he deducts the rent from it. **2** to exploit (people). *ʔit-turgumaan da fannaan fi-stiqṭaaɛ is-suwwaaḥ* that dragoman is expert in the exploitation of tourists.

-vn *ʔistiqṭaaɛ*; ava/pva *mistaqṭaɛ*.
استقطاع *ʔistiqṭaaɛ́* /n pl *-aat*/ deduction. *ʔistiqṭaaɛ id-ḍariiba* the tax deduction.

ق ط ف [1]
قطف *qaṭaf (u)* /vt/ to pick, pluck. *qaṭafit-li ward* she picked me some flowers. -vn *qaṭf*; ava *qaaṭif*; pva *maqṭuuf*.
قطفة *qaṭfa* /inst n, pl *-aat*/ a picking, a plucking. ‖*ʃaay ʔawwil qaṭfa* freshly made tea (as opposed to tea made from adding water to used leaves).
مقطوف *maqṭuuf* /adj/ pallid (usually of the face). *wiff-u (or loon-u) maqṭuuf* he looks pale. -also *maxṭuuf*.
قطف *quṭf* /n pl *qiṭaaf, ʔiqṭaaf*/ bunch (of grapes).
مقطف *maqṭaf* /n pl *maqaaṭif*/ flexible two-handled basket made of palm fronds (see Pl.B, 7).
اتقطف *ʔitqaṭaf* /vi/ to be picked, be plucked. *bi-yitqiṭif ʔaxḍar qabl[i] ma yinfaf* it is picked green, before it dries. -iva *mitqiṭif*.
قطّف *qaṭṭaf* /vt/ to pick or pluck (successively). -also *qarṭaf*. -vn *taqṭiif*; ava/pva *miqaṭṭaf*.
اتقطّف *ʔitqaṭṭaf* /vi/ to be picked, be plucked (successively). -iva *mitqaṭṭaf*.

ق ط ف [2]
قطيفة *qaṭiifa* /n/ **1a** velvet. **1b** (also *qaṭiifa quṭn*) corduroy. **2** Indian or African marigold(s) (Tagetes erecta).
قطايف *qaṭaayif* /pl n/ small pancakes stuffed with nuts or other sweet filling fried and moistened with syrup or honey.

ق ط ق ط
قطقوط *qaṭquuṭ* /n pl *qaṭaqiiṭ*/ cutie, doll.
مقطقط *miqaṭqaṭ* /adj */ dainty, petite.

ق ط م
قطم *qaṭam (u)* **1** /vt/ to break (off). *qaṭam-li ḥittit qaṣab* he broke me off a piece of sugar cane. *qaṭam il-musmaar bik-kammaaʃa* he snapped off the nail with the pincers. *yuqṭum raqabt-ak* may He break your neck! ‖*saaɛit ma ʃafuu-ni qaṭamu k-kalaam* the moment they saw me they broke off their conversation. -*qaṭam saakit* to fall silent. -*ga-k qaṭm[i] wisṭ-ak* may you be halved! **2** /vi/ to break (off). *ʔiṣ-ṣulb[i] naaʃif wi-lamma niigi niʃtaɣal fii b-yuqṭum* the steel is brittle and when we come to work on it, it breaks. *sinn il-qalam qaṭam* the nib of the pen has snapped off. -vn *qaṭm, qaṭamaan*; ava *qaaṭim*; pva *maqṭuum*.
قطمة *qaṭma* /n pl *-aat*/ **1** instance noun of *qaṭm*. **2** bite, mouthful. *xud-lak qaṭma min if-fukulaata di* have a bite of this chocolate!
انقطم *ʔitqaṭam* /vi/ to be broken (off). -iva *mitqiṭim*.
انقطم *ʔinqaṭam* = *ʔitqaṭam*. -iva *minqiṭim*.
قطّم *qaṭṭam* /vt/ **1a** to break up, break off (extensively or successively). *ʔibn-i bi-yḥibb[i] yqaṭṭam ʔiqlaam-u ɛaʃaan yibrii-ha taani* my son likes to break his pencils so he can sharpen them again! **2** to discourage with ridicule. *ɛumr-ak ma-bi-tʃaggaɛ-ni - dayman bi-tqaṭṭam-ni* you never give me any encouragement, you're always running me down! — /vi/ **3** to break up, break off (extensively or successively). -vn *taqṭiim*; ava/pva *miqaṭṭam*.
المقطّم *ʔil-muqaṭṭam* /prop n/ **1** chain of hills running north and south to the east of Cairo. **2** district in the easternmost part of Cairo, situated on the Muqattam hills.
اتقطّم *ʔitqaṭṭam* /vi/ passive of *qaṭṭam*. -iva *mitqaṭṭam*.

ق ط ن
قطن *quṭn* **1** /coll n, pl *ʔaqṭaan*/ cotton. ‖*quṭn[i] ṭibbi* cotton wool, absorbent cotton. **2** /n pl *qaṭaani*/ field of cotton plants.
قطنة *quṭna* /n pl *-aat*/ piece of cotton. ‖*ḥa-taaxud minha ʔeeh ɣeer il-quṭna* what can you take from this world but the piece of cotton (placed in the anus by the corpse-washer)?
قطني *quṭní* /adj */ made of cotton.
قطنيّة *quṭniyya* /n/ **1** cotton-based fabric with a silky finish and woven stripe. **2** /pl *-aat*/ garment made of this fabric.

ق ط و
قطّاوى *qaṭṭaawi* /n/ large variety of pigeon raised for food and breeding, characterized by a large crested head and light-brown plumage.

ق ع د [1]
قعد *qaɛad (u)* /vi/ **1a** to sit, sit down. *qaɛad mirabbaɛ ɛak-kursi* he sat cross-legged on the chair. *tiɛibt[i] min il-quɛaad* I got tired of sitting. *qaɛadit gambi* she sat down next to me. ‖*ʔil-quɛaad maɛaa ḥilw* he's good company. -*quɛaad il-xaẓaana wala gawaazit in-nadaama [prov]* ≈ better miserably single than regretfully married. - *da kaan qaaɛid ɛala qalb-i* ≈ his presence was oppressive, I didn't like him. -*qaaɛid ɛala ʔaɛṣaab-u* he is tense. -*qaɛad ɛala ʔiid(-u)* to keep an eye on (s.o. working), supervise closely, as in *ʔuqɛud ɛala ʔiid-u l-ɣaayit ma yxallaṣ* stand over him until he finishes! **1b** *[naut]* to run aground. **2** to stay, remain.

saɛaat bi-yuqɛudu fil-baḥr' ʕasabiiɛ sometimes they stay at sea for weeks! *miʃ ḥa-yuqɛud laha ṭuul ɛumr-a-ha* he won't wait around for her all her life. *qaɛadt' zaɛlaan ṭuul il-leel* I stayed upset all night long. ‖ *ʕuqɛudi bil-ɛafya↓* ≈ keep well! (said to or by a woman on parting). **3** /preverb/ to continue to. *ʕis-suxuniyya qaɛadit tiruuḥ wi-tiigi* the fever kept coming and going. *ʕin-naas qaɛadu ynaadu ɛat-taksi* the people kept calling for the taxi. *qaɛad yiʃtikii-li* he kept complaining to me. - vn *quɛaad, qaɛadaan, quɛuud*; ava *qaaɛid*.

قعده *qaɛda'* /n pl *-aat*/ **1a** a sitting down. **1b** sitting position. *di qaɛda ma-titqiɛid-ʃ' wil-mudiir mawguud* you shouldn't sit in that position when the boss is around! **2a** what is sat upon, seat. *qaɛdit ik-kursi* seat of the chair. *qaɛdit ik-kabineeh* lavatory seat. *haat karaasi w-qaɛdaat* bring chairs and whatnot to sit on! **2b** pair of buttocks, posterior. **3** informal gathering, gettogether. ‖ *ʕil-ʕafyuun ma-luu-ʃ qaɛda* taking opium is a solitary business.

قعده *qiɛda, qaɛda: zu l-qiɛda* the eleventh month of the Muslim year.

قاعدة *qaɛda²* /n/ **1** /pl *-aat*/ base, stand, pedestal. *qaɛdit il-marwaḥa* base of the fan. *qaɛdit is-sindaal* body of the anvil. *qaɛdit if-fiifa* stand and water-vessel of the water-pipe. **2** /pl *qawaaɛid, qawaaɛid*/ **2a** base, seat (of operations). *qawaaɛid ḥarbiyya* military bases. **2b** basis, foundation. *qaɛda xarasaniyya* cement foundation. **2c** rule, principle. *qawaaɛid in-naḥw* rules of grammar.

قعود *qaɛuud* /n pl *qiɛdaan*/ young male camel.

مقعد *maqɛad* /n pl *maqaaɛid*/ **1** *[rur]* second-floor room. **2** posterior, buttocks.

مقعده *maqɛada, muqɛada* /n/ posterior, buttocks.

اتقعد *ʔitqaɛad* /vi/ (impersonal) passive of *qaɛad*. *di l-bint illi yitqiɛid maɛaaha* this is the girl to be seated with! *ḥaṣiira yitqiɛid ɛaleeha* a mat to be sat on. *makaan yitqiɛid fii* a place to be sat in. - iva *mitqiɛid*.

انقعد *ʔinqaɛad* = *ʔitqaɛad*. - iva *minqiɛid*.

قعّد *qaɛɛad* /vt/ **1** to cause to sit, seat. *qaɛɛad iz-zibuun ɣuddaamu* he sat the customer down before him. **2** to cause to stay. *qaɛɛaduu-na f-lukanda* they put us up in a hotel. *miqaɛɛad-ha ɛal-baab* he is stationing her at the door. - vn *taqɛiid*; ava/pva *miqaɛɛad*.

اتقعّد *ʔitqaɛɛad* /vi/ passive of *qaɛɛad*. - iva *mitqaɛɛad*.

ق ع د ²

قعد *qiɛd* /n/ *[cook]* amount of liquid (usually salt water) appropriate to a particular dish. *ʔil-qiɛd' btaaɛ il-ʃiraax kubbayteen mayya l-kull' farxa* the amount of liquid to be added in the cooking of chickens is two cups of water per chicken. - also *ɛiqd*.

قعديّة *qiɛdiyya* /n pl *-aat, qiɛdaan*/ small earthenware kneading-crock.

ق ع د ³

استقعد *ʔistaqɛad↓* /vi/ to believe (in the effectiveness of s.th., e.g. magic). - also *ʔistaɛqad*. - vn *ʔistiqɛaad*; ava *mistaqɛad*.

ق ع ر

قعر *qaɛar (a, i)* /vt/ **1** to pierce the bottom or base of. *ḥaasib qaɛart iṭ-ṭabla* careful, you've punctured the drum! *kursi maqɛuur* a chair without a seat. **2** *[coarse]* to deflower. - vn *qaɛr, qaɛaraan*; ava *qaaɛir, qaaɛir*; pva *maqɛuur*.

قعر *qaɛr* /n pl *quɛuur, quɛúra*/ **1** bottom, bottom part. *qaɛr il-xaṭṭ* bottom of the furrow. *ʔis-sukkar fi-qaɛr il-fingaal* the sugar is in the bottom of the cup. *ʔil-vaaza laha qaɛr' mdawwar* the vase has a circular base. **2** *[coarse]* cunt.

اتقعر *ʔitqaɛar* /vi/ passive of *qaɛar*. - iva *mitqiɛir*.

قعّر *qaɛɛar* /vt/ **1** to hollow out, make concave. **2** *[pottery]* to attach the bottom part to (a pot). — **3** to fall to a low level. *ʔil-mayya qaɛɛarit fiz-ziir* the water went low in the water-jar. - vn *taqɛiir*; ava/pva *miqaɛɛar*.

اتقعّر *ʔitqaɛɛar* /vi/ passive of *qaɛɛar* 1 and 2. - iva *mitqaɛɛar*.

ق ف ا see ق ف و : *qafa*

ق ف ز

قفز *qafaz (i)* **1** to leap across, jump over. *qafazt it-tirɛa* I leapt across the canal. **2** /vi/ to jump, leap. *ʔil-ḥuṣaan mitmarran ɛal-qafz* the horse is well-trained in jumping. - vn *qafz, qafazaan*; ava *qaafiz*; pva *maqfuuz*.

قفزة *qafza* /inst n, pl *-aat*/ a jump, leap, a vault.

قفيز *qafiiz* /n pl *qafaayiz, qifzaan, ʔiqfiza, qifíza*/ bonding clip.

اتقفز *ʔitqafaz* /vi/ to be jumped over (of a distance, a fence etc.). - iva *mitqifiz*.

قفّز *qaffaz* /vt/ to cause to jump. - vn *taqfiiz*; ava/pva *miqaffiz*.

ق ف ش

قفش *qafaʃ (i)* /vt/ **1** to grip, seize. *qafaʃt' ʔiid-u* I caught his hand. *fagʔa qafaʃ (fi-)zoor-i* he suddenly gripped my throat. ‖ *xad ... qaff* to seize ... with a

sudden movement. *ʔil-mudiir daxal wi-xadt-u qaff* the director entered and I grabbed him straight away. - *xad iṣ-ṣanʕa qaff* he learnt the trade in a random fashion. **2** to catch out, catch in the act. *qafaʃuu b-yisraq* they nabbed him (in the act of) stealing. *muwazzaf kaan laaṭif ʕuhdit-u w-ʔana lli qafaʃt-u* an employee was filching what was entrusted to him and I'm the one who caught him at it. — /vi/ **3** to jam, seize up. *ʔil-faraamil bi-yiqfiʃu ʕaṭ-ṭaara* the brakes jam on the rim. *ʔit-tiruus bi-tiqfiʃ* the gears seize up. **4** to wisecrack. - vn *qaff, qafaʃaan*; ava *qaafiʃ*; pva *maqfuuf*.

قفسه *qaffa* /n pl *-aat*/ instance noun of *qaff*.

اتقفس *ʔitqafaʃ* /vi/ passive of *qafaʃ*. - iva *mitqifiʃ*.

انقفس *ʔinqafaʃ* = *ʔitqafaʃ*. - iva *minqifiʃ*.

قفّس *qaffiʃ* /vt/ **1** to nab, catch (a number of people). **2** to fondle, squeeze (a woman's sensitive parts). *qaffiʃ (fi-)bzaz-ha* he fondled her breasts. — /vi/ **3** to jam, seize up. - vn *taqfiiʃ*; ava/iva *miqaffiʃ*.

اتقفّس *ʔitqaffiʃ* /vi/ **1** passive of *qaffiʃ* 1 and 2. **2** = *qaffiʃ* 3. - iva *mitqaffiʃ*.

ق ف ص

قفص *qafaṣ* /n pl *ʔaqfaaṣ, qifaaṣ, qifiṣa*/ **1** cage or crate of palm stalks, used to transport fruit, produce, poultry. ‖ *baḍit-lu fil-qafaṣ* ≈ good fortune just fell into his lap. **2** *[anat]* rib cage. ‖ *(huwwa) nafas fi-qafaṣ* (he is) barely alive. **3** prisoner's dock.

قفّاص *qaffaaṣ* /n */ maker of palm-stalk crates.

قفّص *qaffaṣ* /vt/ to crate (in palm-stalk crates). *qaffaṣu t-tiin* they crated the figs. - vn *taqfiiṣ*; ava/pva *miqaffaṣ*.

تقفيصه *taqfiiṣa* /n pl *-aat*/ **1a** large crate made of palm stalks. **1b** fence or enclosure made of palm stalks. *taqfiiṣit firaax* chicken coop. **2** *[constr]* grid of reinforcement bars of the foundation base of a post or pillar.

اتقفّص *ʔitqaffaṣ* /vi/ to be crated (in palm-stalk crates). - iva *mitqaffaṣ*.

ق ف ط ا ن

قفطان *quftaan* <T *kaftan*> /n pl *qafaṭiin*/ kaftan, long loose robe (usually made of striped cotton-silk material) worn under outer garments by men in traditional Egyptian society (see Pl.F, 16).

ق ف ع

قفع *qaffaʕ* **1** /vt/ to cause to shrivel up, emaciate. **2** /vi/ to be or become shrivelled up or emaciated. - vn *taqfiiʕ*; ava *miqaffaʕ*.

تقفيعة *taqfiiʕa* /pl *-aat*/ instance noun of *taqfiiʕ*.

اتقفّع *ʔitqaffaʕ* /vi/ to become or be made shrivelled or emaciated. - ava/iva *mitqaffaʕ*.

ق ف ف

قفّة *quffa* /n pl *qufaf*/ large flexible two-handled basket of palm stalks similar to a *maqṭaf* (see Pl.B, 7), but larger. *ʔil-quffa lli laha widneen yifiluu-ha tneen [prov]* ≈ many hands make light work. ‖ *waaqiʕ min qaʕr il-quffa* overlooked as trivial, unjustifiably disregarded, as in *ma-daʕu-nii-ʃ ʕal-faraḥ - tiqul-ʃ' waaqiʕ min qaʕr il-quffa* they didn't invite me to the wedding, as if I were a nobody.

ق ف ق ف

ففقف *qafqaf* /vi/ to shiver with cold, - vn *qafqafa*; ava *miqfqaf*.

ق ف ل ١

قفل *qafal (i)* /vt/ **1** to close, shut. *ʔiqfil il-baab* close the door! *qafalt-u bil-muftaaḥ* did you lock it? ‖ *ʔiqfil is-sikka* hang up the phone! - *qafalt' ḥsaab-i fil-bank* I closed my account at the bank. - *xaana maqfuula* point occupied by a specific number of counters of one player (in backgammon). - *zawya maqfuula [math]* acute angle. - *baṭṭiixa maqfuula* a matter of luck, as in *ʔig-gawaaz baṭṭiixa maqfuula* marriage is (like) a closed water-melon (you can't tell how it's going to turn out). - *nifs-u maqfuula minni muf ʕaarif leeh* he's indifferent to me - I don't know why! **2** to turn off, switch off. *ʔiqfil ir-radyu* turn off the radio! *ma-qafalt'-ʃ il-ḥanafiyya* you didn't turn off the tap! — /vi/ **3** to close. *ʔif-firka b-tiqfil yoom ig-gumʕa* the firm closes on Fridays. *ʔig-gamʕa qafalit* the university closed down. - vn *qafl, qafalaan*; ava *qaafil*; pva *maqfuul*.

قفلة *qafla* /n pl *-aat*/ **1** instance noun of *qafl*. **2** closing passage, final section. *qaflit il-ʔinneewa kaanit zift* the end of the song was terrible.

قفل *qifl* /pl *ʔaqfaal*/ **1** /n/ lock, padlock. **2** /adj invar/ **2a** inflexible. *raagil qifl* a dogmatic man. **2b** *[abus]* inexperienced, naive. *walad qifl* a green kid.

اتقفل *ʔitqafal* /vi/ **1** to be closed, be shut. *ʔis-sifaara tqafalit* the embassy was closed down. **2** to be switched off, be turned off. - iva *mitqifil*.

انقفل *ʔinqafal* = *ʔitqafal*. - iva *minqifil*.

قفّل *qaffil* /vt/ **1a** to close up, close off. *ʔil-wiʃʃeen illi bi-yqaffilu l-mutoor* the two sides that close off the motor. *qaffil il-beet* close up the house! ‖ *qaffilt il-ʔarḍ* you blocked the play (in cards). - *ʔil-buliis miqaffil-ha ʕaleena* the police are clamping down on us.

- *ʃil-balṭagiyya ɋaffilu l-ɋahwa* the thugs made a shambles of the coffee-house (i.e. caused it to be closed down). **1b** to close (a number of things). *ɋaffil kull iʃ-ʃababiik* close all the windows! **2a** to finish up, finish off (a job). *ɋaffilt il-beeɛa* I wrapped up the sale. **2b** to assemble, put together. *ɋaffil il-ħalɋ* he assembled the door-frame. *taɋfiil nihaaʃi* a final assembly. — /vi/ **3** to close (of a number of things). *ʃinzil il-balad yoom il-ħadd' tlaaɋi muɛẓam il-maħallaat miɋaffila* if you go downtown on Sunday you'll find most of the stores closed. ‖*muxx-i ɋaffil* my mind has jammed, my mind has stopped working. - *ma-tkallim-uu-ʃ wi-huwwa mɋaffil* don't talk to him when he's in a bad mood (unreceptive, closed)! - vn *taɋfiil*; ava/pva *miɋaffil*.

مقفّل *miɋaffil* /adj */ **1** inflexible, dogmatic. **2** inexperienced, naive.

اتقفّل *ʃitɋaffil* /vi/ **1** to be closed up, be closed off. *ʃiʃ-ʃunaṭ kull-a-ha tɋaffilit bil-muftaaħ* the suitcases have all been locked. **2a** to be finished up, be finished off. *ʃiʃ-ʃuɣl itɋaffil* the work was all wrapped up. **2b** to be assembled, be put together. *ħa-yitɋaffil fi-makaan-u* it will be assembled in situ. - iva *mitɋaffil*.

ق ف ل ²

قافلة *ɋafla, qaafila↑* /n pl *ɋawaafil, qawaafil*/ caravan. *qaafilit ṣeed* hunting expedition.

ق ف و

قفا *ɋafa* /n pl *ɋafawaat, ʃiɋfiya*/ **1** nape. *xadt-u ɋafa* I gave him a blow on the back of the neck. ‖*xalla wiʃʃ-i ẓayy' ɋafaa-ya* he humiliated me with his bawling. - *ɛala ɋafa mın yifiil* plentiful, abundant, as in *ʃis-samak hina ɛala ɋafa min yifiil* here fish is plentiful. - *ɛala ɋafa* ... at the expense of ..., as in *huwwa ɛaayif ɛala ɋafaa-ya* he's living at my expense. - *lamma yfuuf ɋafaa min ɣeer miraaya [prov]* when he sees the back of his neck without a mirror (i.e. never)! - *ʃilli tikrah (tifuuf) wiʃʃ-u yiħwig-ak iz-zaman li-ɋafaa [prov]* Time may put you in need even of the nape of the neck of one whose face you do not (at present) like to see. **2** /pl *ɋafawaat* only/ an oafish person.

قافية *ɋafya* /n pl *-aat, ɋawaafi*/ witty repartee centring on a single subject, each remark punning a particular aspect of the subject, in a form similar to 'knock-knock' jokes. *daxalna l-baɛḍ' ɋafya* we engaged in witty repartee. ‖*bala ɋafya↓* seriously, no joke intended, all kidding aside.

اتقفّى *ʃitɋaffa* /vt/ **1** to watch (s.o.) closely, subject to close scrutiny. **2** to pester, harass, pick on. *ʃibɛid ɛanni ʃinta mitɋaffii-nii leeh* keep away, why are you needling me? - ava *mitɋaffi*.

استقفى *ʃistaɋfa* = *ʃitɋaffa*. - ava *mistaɋfi*.

استقفّى *ʃistiɋaffa↓* = *ʃitɋaffa*. - ava *mistiɋaffi*.

ق ف ى see ق ف و : *ɋafya*

ق ل ب ¹

قلب *ɋalab (i)* /vt/ **1a** to invert, turn over. *ʃiɋlib il-martaba* turn over the mattress. *ɋalab ig-gallabiyya w-hazz-a-ha* he turned his galabiya inside out and gave it a shake. ‖*ʃakalt[a] ħaaga ɋalabit miɛdit-i* I ate something which upset my stomach. - *ɋalab dimaaɣ-i b-kalaam-u* he set my head spinning with his talk. - *ɋalab siħnit-u* he scowled. - *ɋalabit-u ɛalayya* she turned him against me. - *ɋalabt il-beet ɛak-kitaab da* I turned the house upside down looking for that book, I looked everywhere for it. - *ma-tiɛmil-ʃ' kida laħsan babaa-k yiɋlib id-dinya* don't do that or your daddy will make one hell of a row! **1b** to knock over. *ɋalab iʃ-ʃaay* he knocked over the tea. **2** to convert into, turn into. *ɋalab il-ʃooḍa maktab* he turned the room into an office. *ɋalabit-u ɋird* she turned him into a monkey. *ma-tiɋlib-haa-ʃ ɣamm* don't make things gloomy! ‖*ɋalbin-ha buuẓa* (1) they are having a riotous time. (2) they've made the whole thing chaotic. — /vi/ **3** to become inverted, turn over. *ʃil-markib ɋalabit* the boat capsized. *bir-raaħa laħsan il-ħumuula tiɋlib ɛalayya* take it easy or the load will tip onto me! **4** to undergo a change, become converted. *ħaẓẓ-i ɋalab* my luck changed. *ʃil-ħafla ɋalabit (bi-)ɣamm* the mood of the party became funereal. - vn *ɋalb, ɋalabaan*; ava *ɋaalib*; pva *maɋluub*.

قلبة *ɋalba* /inst n, pl *-aat*/ an inversion, a turning upside-down, a conversion. ‖*ɋalbit dimaaɣ* fuss and bother.

مقلوب *maɋluub* /adj/ inverted, reversed. ‖*bil-maɋluub* (1) upside-down. (2) inside-out. (3) back-to-front. (4) backward, in reverse order. - *buus ʃiid-ak bil-maɋluub* kiss your hand back and front (as a sign of gratitude to God).

قلبة *ɋalaba* /n/ noise, fuss. *baṭṭal ɋalaba* be quiet!

قلاّب *ɋallaab* /n pl *-aat*/ **1** cement mixer. **2** tipper truck. **3** flap (e.g., on a pocket or cuff). **4** *ɋallaab in-nuur [auto]* dipper.

مقلب *maɋlab* /n pl *maɋaalib*/ **1** (dirty) trick, prank. *ḍarab-na maɋlab* he played a dirty trick on us. **2** refuse dump.

اتقلب *ʃitɋalab* /vi/ **1a** to be inverted, invert. *kull il-fanagiin bi-titɋilib ɛala wiʃʃ-a-ha baɛḍ' ma titɣisil* all

the cups are turned upside down after being washed. *ʃil-ɛarabiyya tqalabit ɛala ḍahr-a-ha* the car was turned right over! **1b** to be knocked over. **2** to be converted. *ʃil-ɛimaara tqalabit lukanda* the building has been converted into a hotel. - ava/iva *mitqilib*.

انقلب *ʃinqalab* = *ʃitqalab*. - vn *ʃinqilaab*; ava/iva *minqilib*.

انقلاب *ʃinqilaab, ʃinqilaab* /n pl *-aat*/ coup. *ʃinqilaab ɛaskari* military coup.

قلّب *qallib* /vt/ **1a** to invert (one thing successively or a number of things). *bi-yqallib-u bil-midra* he turns it over and over with a winnowing fork. ‖ *qallib fi-gyuub-u* he rummaged around in his pockets. **1b** to stir. *qallib il-buuya* he stirred the paint. *qallib-hum fi-baɛḍ* stir them together! ‖ *beeḍ miqallib* scrambled eggs. - *bi-yqallib ɛalayya l-mawaagiɛ* he stirs up old wounds of mine. **2** to examine thoroughly, check carefully. *qallib (f)il-ɛarabiyya* he gave the car a careful check-over. *qallib (f)il-ḥumaar qabl[i] ma tiftirii* look the donkey over carefully before you buy it. ‖ *qaɛad yiqallib fik-kitaab* he leafed through the book. - *wiff iṣ-ṣuramaati yqallib-u w-yirmii* (a face which even a cobbler would only examine and discard) ≈ an ugly mug. - vn *taqliib*; ava/pva *miqallib*.

اتقلّب *ʃitqallib* /vi/ **1a** to be inverted (of one thing successively or of a number of things). *ʃil-kubbayaat kull-a-ha titqallib baɛd[i] ma titɣisil* the glasses are all upturned after they are washed. **1b** to turn oneself over and over. *qaɛad yitqallib fis-siriir* he kept tossing and turning in bed. **2** to be stirred. - ava/iva *mitqallib*.

ق ل ب [2]

قلب *qalb* /n pl *quluub*/ **1** heart. ‖ *ɛandu l-qalb* he has heart trouble. - *ḥaṭṭa ʃid-ha ɛala qalb-a-ha* she's apprehensive. - *qalb-u wiqiɛ fi-riglee* ≈ his heart was in his mouth. - *yigii-lak qalb* have courage! - *qalb-i maɛaak* and *qalb-i ɛandak* I sympathize with you, my heart is with you. - *ʃil-quluub ɛand[i] baɛḍ-a-ha* ≈ a person can always tell when another likes him. - *qalb-i ɛaleek* (1) I have your interest at heart. (2) I worry about you. - *qalb-i ɛala ʃibn-i nfaṭar wi-qalb ibn-i ɛalayya zayy il-ḥagar [prov]* (I was heart-broken over my son, but my son's heart was as hard as stone towards me) children are a certain care but an uncertain comfort. - *ya qalb umm-u* poor darling, as in *kaanit ya qalb umm-a-ha ɛayyaana* she was sick, poor darling! **2** centre, core, inside. *qalb is-silk* core of the wire. *qalb if-fams* the sun's core. *qalb il-makana* the inside of the machine. *qalb[i] xaṣṣ* lettuce heart. *huwwa waaqif fi-qalb il-malɛab* he's standing in the centre of the pitch. ‖ *qalb[i] ṭambuur* axle-rod of an Archimedes' screw. - *qalb[i] gooza* cylindrical stem which leads out of the water-vessel of a *gooza* and supports the tobacco (see Pl.I, 9). — *fi-qalb-* /prep, w foll pron suff *qalbii-*/ **3** in, inside. *fi-qalb is-siriir* in the bed. *fi-qalb il-mayya* in the water. *fi-qalb id-dulaab* inside the wardrobe.

قلبيّة *qalbiyya* /n pl *-aat*/ centre, core, inside. *qalbiyyit il-furn[i] suxna* the inside of the oven is hot. ‖ *fi-qalbiyyit* within, inside, as in *laqeet il-quṭṭa f-qalbiyyit if-fanṭa* I found the kitten inside the suitcase.

قالب *qaalib* /n pl *qawaalib*/ **1** block, cube. *qaalib sukkar* sugar cube. *qaalib ṭuub* brick. **2** mould, matrix. *qaalib ig-gazma* shoe-last.

ق ل ح [1]

ق ل و ح : *qaluuḥ, qaluuḥa*

ق ل ح [2]

ق و ل ح : *qolḥa*

ق ل د

قلّد *qallid* /vt/ to imitate. *ʃiḥna bi-nqallid ʃurubba f-ɛuyub-ha* we are imitating Europe in her faults. *qallid ṣoot il-baṭṭa* he imitated the sound of a duck. - vn *taqliid*; ava *miqallid*.

تقليد *taqliid* /n pl *taqaliid, taqaliid*/ tradition, custom.

تقليد *taqliid* /adj invar/ imitation. *feen il-fuṣuuṣ it-taqliid illi ɛandak* where are the imitation stones you have? ‖ *naas taqliid* unreliable people.

تقليدِي *taqliidi, taqliidi* /adj/ traditional.

اتقلّد *ʃitqallid* /vi/ to be imitated. - iva *mitqallid*.

ق ل س

قلسة *qilsa* /n pl *qilas*/ *[rur]* hobble of a type resembling rope handcuffs.

ق ل ش

قلش *qalaʃ (i)* **1** /vt/ to oust, throw out. *qalaʃuu min il-firqa* they threw him out of the team. **2** /vi/ *[soccer]* **2a** to miss completely or graze the ball (in aiming a kick). **2b** to be missed completely or be grazed (of a ball at which a kick has been aimed). - vn *qalʃ, qalaʃaan*; ava *qaaliʃ*; pva *maqluuʃ*.

اتقلش *ʃitqalaʃ* /vi/ to be ousted, be thrown out. - iva *mitqiliʃ*.

انقلش *ʃinqalaʃ* = *ʃitqalaʃ*. - iva *minqiliʃ*.

قلّش *qalliʃ* = *qalaʃ*. - vn *taqliiʃ*; ava/pva *miqalliʃ*.

ق ل ش ی ن

قلشين *qalʃiin* <T *kalçin* from It> /coll n pl *qalaʃiin*/ puttee(s).

قلشينة *ʔalfiina* /unit n, pl *-aat*/ a puttee.

ق ل ص

قلص *ʔalaṣ (i)* /vi/ **1** to move back onto the hindlegs (of a horse). *ʔil-ḥuṣaan ʔalaṣ* the horse reared back. **2** to sit back on the hindlegs (of a horse). **3** to make a break for it. - vn *ʔalṣ, ʔalaṣaan*; ava *ʔaaliṣ*.

قلصة *ʔalṣa* /pl *-aat*/ instance noun of *ʔalṣ*.

قلّص *ʔallaṣ* = *ʔalaṣ*. - vn *taʔliiṣ*; ava *miʔallaṣ*.

تقلّص *taʔalluṣ*↑ /n pl *-aat*/ contraction, cramp.

[1] ق ل ط

قلط *ʔalaṭ (u)* /vt/ *[coarse]* to excrete an *ʔalluuṭ*. - vn *ʔalṭ*; ava *ʔaaliṭ*; pva *maʔluuṭ*.

قلطة *ʔalṭa* /pl *-aat, ʔulaṭ/ [coarse]* instance noun of *ʔalṭ*.

قلّوط *ʔalluuṭ* /n pl *ʔalaliiṭ/ [coarse]* large firm turd (produced by a human).

اتقلط *ʔitʔalaṭ* /vi/ *[coarse]* to be excreted (of an *ʔalluuṭ*). - iva *mitʔiliṭ*.

قلّط *ʔallaṭ* /vt/ *[coarse]* to excrete *ʔalaliiṭ*. - vn *taʔliiṭ*; ava *miʔallaṭ*.

[2] ق ل ط

قلط *ʔiliṭ* /adj */ arrogant, conceited.

أقلط *ʔaʔlaṭ* /el/ more/most arrogant.

قلاطة *ʔalaaṭa* /n/ arrogance, pride and conceit, haughtiness.

قليط *ʔaliiṭ* /adj pl *ʔulaṭa/* arrogant, conceited.

اتقالط *ʔitʔaaliṭ* /vi/ to behave arrogantly. - ava *mitʔaaliṭ*.

[3] ق ل ط

قليطة *ʔaliiṭa* /n pl *ʔalaayiṭ/ [path]* varicocele.

قيلط *ʔeelaṭ* /vi/ to develop an *ʔaliiṭa*. ‖*ʔeelaṭt' mil-ʕiyaal dool* I suffered much worry and pain on account of those children. - ava *miʔeelaṭ*.

[1] ق ل ع

قلع *ʔalaʕ (a)* /vt/ **1** to pull out, uproot. *laazim tiʔlaʕ id-dirs' da* you must have that molar pulled. ‖*ʔizraʕ ibn' ʔaadam yiʔlaʕ-ak [prov]* ≈ if you help make a man strong he will destroy you (comment on human ingratitude). **2** to take off, pull off (clothing, jewelry). *naam min ʕeer ma yiʔlaʕ hiduum-u* he went to sleep without undressing. *ʔalaʕit id-dibla* she took off her ring. — /vi/ **3** to undress. *ʔalaʕ malṭ* he stripped naked. **4** to change from outdoor clothes to indoor clothes or nightwear. - vn *ʔalʕ, ʔalaʕaan*; ava *ʔaaliʕ*; pva *maʔluuʕ*.

مقلاع *muʔlaaʕ, miʔlaaʕ* /n pl *maʔaliiʕ*/ slingshot, catapult.

اتقلع *ʔitʔalaʕ* /vi/ **1** to be pulled out, be uprooted. *ʔif-ʃagara tʔalaʕit* the tree was uprooted. **2** to be taken off, be pulled off (of clothing, jewelry). - iva *mitʔiliʕ*.

انقلع *ʔinʔalaʕ* = *ʔitʔalaʕ*. - iva *minʔiliʕ*.

قلّع *ʔallaʕ* /vt/ **1** to pull out, uproot (a number of things). *ʔallaʕ sinaan-i kull-a-ha* he pulled out all my teeth. *ʔallaʕ if-ʃital* he pulled up all the seedlings. **2** to cause to take off (clothing, jewelry). *ʔil-ʕasaakir ʔallaʕuu hduum-u* the soldiers made him undress. – /vi/ **3** to run (off). *ʔawwil ma ʃaf-ni raaḥ miʔallaʕ* as soon as he saw me he took to his heels. *ʔallaʕ waraaha* he tore after her. - vn *taʔliiʕ*; ava/iva *miʔallaʕ*.

تقليعة *taʔliiʕa* /n pl *taʔaliiʕ/* **1** craze, fad, (passing) fancy. *kull' yoom bi-yiṭlaʕ bi-taʔliiʕa gdiida* every day he comes up with a new craze. -/adjectively/ *raagil taʔliiʕa* a man given to eccentric behaviour. **2** *[rur obsol]* performance given by itinerant players.

اتقلّع *ʔitʔallaʕ* /vi/ passive of *ʔallaʕ*. - iva *mitʔallaʕ*.

[2] (ق ل ع)

قلع *ʔilʕ, ʔalʕ* /n pl *ʔuluuʕ, ʔilaaʕ/* **1** sail. **2** sailcloth, tent-cloth.

قلعة *ʔalʕa* /n pl *-aat*/ **1** fortress. **2** *ʔil-ʔalʕa'* **2a** the Citadel (of Muhammad Ali, east of Cairo, on the Muqattam Hills). **2b** district around the Citadel.

ق ل ع ط

قلعط *ʔalʕaṭ* /vt/ *[deris]* to pay excessive attention to the arrangement of (clothes, personal adornment). - vn *ʔalʕaṭa*; ava/pva *miʔalʕaṭ*.

قلعاط *ʔilʕaaṭ* = *ʔalʕuuṭ*.

قلعوط *ʔalʕuuṭ* /n pl *ʔalaʕiiṭ/ [abus]* ≈ stuck-up bastard, pompous twit.

اتقلعط *ʔitʔalʕaṭ* /vi/ **1** passive of *ʔalʕaṭ*. **2** to primp, preen. **3** to behave like an *ʔalʕuuṭ*. - vn *tiʔalʕiiṭ*; ava *mitʔalʕaṭ*.

ق ل ف

قلفة *ʔalafa* /n pl *-aat*/ foreskin, prepuce. - also *ɣalafa*.

ق ل ف ط

قلفط *ʔalfaṭ* <prob It *calafatare*> /vt/ **1** to caulk. **2** to make (s.th.) acceptable in appearance (but not necessarily in reality). *ʔalfaṭ il-ʕimma* he made the turban neat and perfectly shaped. *ʔalfaṭ-lu f-fuɣlaana ʕala ma timfi min ʔuddaamu* just do the job so it will look O.K. to him till you leave. - vn *ʔalfaṭa*; ava/pva *miʔalfaṭ*.

قلفاط *ʔilfaaṭ* /n pl *ʔalafiiṭ/* **1** caulking-chisel. **2a** one whose work is quickly and superficially performed. **2b** confidence trickster.

قلفطي *ʔalafṭi* /n pl *-yya*/ caulker.
اتقلفط *ʔitʔalfaṭ* /vi/ passive of *ʔalfaṭ*. - iva *mitʔalfaṭ*.

ق ل ف ن

فلفونيّة *ʔalafuniyya* <Gr> /n/ rosin, colophony, resin.
قلفن *ʔalfin* /vt/ to cover or coat with *ʔalafuniyya*. *ʔoos ik-kamanga ma-ygib-f' ṣoot min ɤeer ma nʔalfin-u* the violin bow doesn't produce sound unless it is rubbed with rosin. - vn *ʔalfana*; ava/pva *miʔalfin*.
اتقلفن *ʔitʔalfin* /vi/ to be covered or treated with *ʔalafuniyya*. - vn *tiʔalfiin*; iva *mitʔalfin*.

ق ل ق [1]

قلق *ʔiliʔ (a)* /vi/ **1** to become worried or anxious. **2a** to wake suddenly. *ʔiliʔt[a] ɛala ṣoot ɛarabiyya* I woke at the noise of a car. **2b** to be restless and unable to sleep. *ʔaɛadt' ʔalʔaan ṭuul il-leel* I was tossing and turning all night long. - vn *ʔalaʔ, ʔalaʔaan*; ava *ʔalʔaan*.
قلق *ʔalaʔ [1] (i)* /vt/ to cause to worry, make anxious, disturb. *ʕeeh illi ʔalaʔ-ak ɛalee* what's making you worry about him? - vn *ʔalaʔ, ʔalaʔaan*; ava *ʔaaliʔ*.
اتقلق *ʕitʔalaʔ* /vi/ **1** to be made worried or anxious. **2** to be woken from, or disturbed in, one's sleep. - iva *mitʔiliʔ*.

ق ل ق [2]

قلق *ʔalaʔ [2]* /n/ smudge of dirt (on the seat of a garment).
قلقة *ʔalaʔa = ʔalaʔ*.
قلّق *ʔallaʔ* **1** /vt/ to soil, dirty the seat of (a garment). *ʔallaʔ ig-gallabiyya* he got the seat of his galabiya dirty. **2** /vi/ to become soiled, become dirty (of a garment). - ava/iva *miʔallaʔ*.

ق ل ق ا س

قلقاس *ʔulʔaas* <Gr *kolokasia*> /coll n/ taro (Colocasia antiquorum).
قلقاسة *ʔulʔaasa* /pl *-aat*/ unit noun of *ʔulʔaas*.
قلقاسايّة *ʔulʔasaaya = ʔulʔaasa*.

ق ل ق ل

قلقل *ʔalʔal, ʔalʔil* /vt/ **1a** to work (s.th.) loose. *ʔalʔilt il-musmaar min il-ħeeṭa* I wriggled the nail out of the wall. **1b** to budge (s.th. heavy). *ma-ʔdirt'-ʃ ʕaʔalʔal id-dulaab min makaan-u* I couldn't budge the wardrobe from its place. **2** to cause to falter or waver. *kalaam-u ʔalʔal-ni* his words made me waver. — /vi/ **3** to falter, waver. *ʔalʔal fif-ʃihaada ʔuddaam il-maħkama* he faltered in (his) testimony before the court. *lamma geet ʕasammaɛ ʔalʔalt* when I came to recite I stumbled (over the text). - vn *ʔalʔala*; ava/iva *miʔalʔil, miʔalʔal*.
قلقيل *ʔulʔeel* /coll n/ clods of earth.
قلقيلة *ʔulʔeela* /unit n, pl *-aat, ʔalaʔiil*/ a clod of earth.
اتقلقل *ʕitʔalʔal, ʕitʔalʔil* /vi/ **1a** to work loose, be worked loose. **1b** to budge, be budged. **2** to falter or waver, be made to falter or waver. - ava/iva *mitʔalʔal, mitʔalʔil*.

ق ل ل [1]

قلّ *ʔall (i)* **1** /vt/ to reduce, lessen, decrease. *ʕil-ɛiyuub bi-tʔill' ʔiimit il-ʔumaaʃ* defects reduce the value of the cloth. *ʕiṭ-ṭamaɛ yiʔill' ma gamaɛ [prov]* ≈ greed will make you lose even what you have (while you are too busy thinking about how to get more). ‖*ʔall' ʕadab-u ɛalayya* he was rude to me. **2** /vi/ to become less, decrease. *ʕil-xuṭuura ʔallit* the danger lessened. *ɤiyaab-i miʃ ħa-yʔill[a] ɛan yomeen* I'll be away at least two days. *kull' ma s-sinn' yʔill ...* the younger one is .... - vn *ʔall, ʔalalaan, ʔilla, ʔilliyya*; ava *ʔaalil*; pva *maʔluul*.
قلّة *ʔilla* /n/ scarcity, scantiness. *ʔillit il-ɛaʔl* foolishness, silliness. *ʔillit il-ʕadab* impoliteness, bad manners. ‖*ʕaħsan min ʔillit-ha* better than nothing. - *min ʔillit ma-fii-ʃ* for lack of anything better, as in *bi-naakul ɛeeʃ ħaaf min ʔillit ma-fii-ʃ* we are eating dry bread because there is nothing else we can afford.
قليل *ʔaliil* **1** /adj pl *ʔulalaat*, in constr only/ lacking in, having little of. *ʔaliil il-baxt* unlucky. ‖*ʔaliil id-diin* (1) one who does not observe religious practices. (2) cheat. **2** /n/ small amount, small number. *ɛadad-hum ʔaliil* they are few in number. *raaḍi b-ʔaliil-(u)* content with little. ‖*faat il-kitiir ma-baʔaa-ʃ ʕilla l-ʔaliil* ≈ the worst is over. **3** /adv/ **3a** little, not much. *nimt' ʔaliil* I didn't get much sleep. **3b** rarely. *ʔaliil lamma yiksab* he rarely earns any money. *bi-nfuuf-u ʔaliil* we don't see much of him.
قلّيل *ʔulayyil* **1** /adj */ little, few. *naas ʔulayyiliin* few people. *maɛaaya filuus ʔulayyila* I have little money with me. *ʕiṣ-ṣubħ' badri it-tukúsa ʔlayyila fif-ʃawaariɛ* early in the morning there are few taxis in the streets. **2** /n/ small amount, small number. *ɛaayif bil-ʔulayyil* he lives on little. **3** /adv/ **3a** little, not much. *ɛandu suxuniyya wi-b-yaakul ʔulayyil* he has a fever and doesn't eat much. **3b** rarely. *ma-b-aruħ-ʃ' ħnaak ʕilla ʔlayyil* I go there only rarely.
أقلّ *ʕaʔall* /el/ less/least, fewer/ fewest etc. *ʕaʔall' ṣoot bi-yxawwif-ha* the slightest sound scares her. *huwwa ʕaʔall' minni fis-sinn* he is younger than me. *da ʕaʔall' waaħid bi-yiʃtaɣal* he's the one who works the least. ‖*ʕaʔall' min il-ʔaliil* ≈ less than nothing. - *ʕaʔall' ma fiiha* and *ɛala l-ʕaʔall* at least.

أقلّيّة *ʔaqalliyya↑* /n pl *-aat*/ minority.
اتقلّ *ʔitqall* /vi/ to be reduced, lessened, or decreased. - iva *mitqall*.
انقلّ *ʔinqall* = *ʔitqall*. - iva *minqall*.
قلّل *qallil* /vt/ to reduce, lessen, decrease. *qallil (min) suxunt-u* he reduced its heat. *b-aḥaawil ʔaqallil (min) it-tadxiin* I'm trying to cut down on smoking. - vn *taqliil*; ava *miqallil*.
اتقلّل *ʔitqallil* /vi/ to be reduced, be lessened, be decreased. - iva *mitqallil*.
استقلّ *ʔistaqall* **1** /vt/ to deem trifling, consider to be of little value. *bi-yistaqall[a] ɛaql-i* he underrates my intelligence. *ʔistaqall il-murattab* he thought the salary a pittance. **2** /vi/ to become independent, become separate. *ʔif-faɛb' bi-yṭaalib bil-istiqlaal* the people are demanding independence. - vn *ʔistiqlaal*; ava *mistaqall, mistiqill*.
مستقلّ *mustaqill* /adj */ independent.

ق ل ل [2]
قلّة *qulla* /n pl *qulal*/ earthenware water-jug (see Pl.A, 1). ‖*kasarna waraa qulla* ≈ we said 'good-bye and good riddance' when he left! - *ḍarab bil-qulla* to bray angrily and thrust out the tongue so it looks like a water-jug, (of a camel).
قلّالي *qulali* /n pl *-yya*/ maker or seller of earthenware water-jugs.
القلّالي *ʔil-qulali* /prop n/ quarter in Cairo, immediately to the south-west of the main railway station.

ق ل ل [3] see ق و ل [1] : *qill*

ق ل ل و س
قلّوسة *qalluusa* /n pl *-aat, qalaliis*/ *[Chr]* hat worn by Greek and Coptic Catholic clergy.

ق ل م
قلم *qalam* /n pl *ʔiqlima, ʔiqlaam, qilma*/ **1** pen, pencil. *qalam ʔabanoos* or *qalam ḥibr* fountain pen. *qalam gaaff* ball-point pen. *qalam basṭ* reed pen (as used by calligraphers). ‖*furfa qalam* pointed brush. - *ḥagar qalam* pen-light battery. **2** *[hort]* **2a** stalk, shoot. *ʔif-fagara gaabit ʔiqlaam* the tree put out shoots. **2b** type of grafting. **3** department, division. *qalam il-muruur* Traffic Control Board. **4** slap (especially on the face). *ʔiddeet-u qalam mif ḥa-yquum minnu ʃahr' ʃahreen* I gave him a slap that will take him a couple of months to recover from! ‖*waaxid qalam fi-nafs-u* he's stuck-up.
مقلمة *maqlama* /n pl *-aat*/ pen or pencil case.
قلّم *qallim* /vt/ **1** to trim, clip. *bi-nqallim in-naxl' marriteen fif-fita* we prune the palms twice during the winter. **2** to stripe. *qumaaʃ miqallim* striped cloth. - vn *taqliim*; ava/pva *miqallim*.
اتقلّم *ʔitqallim* /vi/ passive of *qallim*. - iva *mitqallim*.

ق ل ن see ق و ل و ن : *qawloon*

ق ل و
قلوي *qalawi* /adj/ alkaline.
قلويّة *qalawiyya* /n pl *-aat*/ **1** alkali: **2** alkalinity.

ق ل و ح see also ق و ل ح
قالوح *qaluuḥ* /coll n/ corn cob(s).
قالوحة *qaluuḥa* /unit n, pl *-aat, qawaliiḥ*/ a corn cob. - also *kaluuḥ*.

ق ل و ظ
قلاووظ *qalawooẓ, qalawuuẓ* <T *kılavuz*> /n/ **1** thread (of a screw). *musmaar qalawooẓ* screw. *lamba qalawooẓ* screw-in light-bulb. **2** /pl *-aat*/ screw.
قلوظ *qalwaẓ* /vt/ **1** to cut a thread, form a thread on. **2** to fix by screwing. *qalwaẓ il-mawasiir ɛala baɛḍ* he screwed the pipes together. **3** to form into a ball shape. *xudi l-ɛagiina di qalwaẓii-ha* take this piece of dough and make it into a ball. - vn *qalwaẓa*; ava/pva *miqalwaẓ*.
مقلوظ *miqalwaẓ* /adj/ *[joc]* finely formed, nicely put together. *ɛimma mqalwaẓa* a nicely wrapped turban. *ḥikaaya mqalwaẓa* a neat story. ‖*gitta mqalwaẓa* curvaceous figure.
اتقلوظ *ʔitqalwaẓ* /vi/ passive of *qalwaẓ*. - iva *mitqalwaẓ*.

ق ل ى [1]
قلى *qala (i)* /vt/ **1** to fry. *samak maqli* fried fish. **2** to roast (grains, cereals etc.). *bunn' maqli* roasted coffee beans. - vn *qaly, qaliyya, qalayaan*; ava *qaali*; pva *maqli*.
قلية *qalya* /inst n, pl *-aat*/ **1** a (single) frying. **2** amount of food used in a single frying.
قلّيّة *qaliyya* = *qalya*.
مقليّات *maqliyyaat* /pl n/ fried foods.
قلاّية *qallaaya[1]* /n pl *-aat*/ deep fryer.
مقلة *maqla[1]* /n pl *-aat, maqaali*/ container for roasting coffee beans.
مقلى، مقلة *maqla[2], miqla* /n pl *-aat*/ shop selling nuts, popcorn, roasted seeds etc., snack shop.
مقلاية *maqlaaya* = *maqla[1]*.
اتقلى *ʔitqala* /vi/ to be fried. - iva *mitqili*.
انقلى *ʔinqala* = *ʔitqala*. - iva *minqili*.

قلى *ʔalla* /vt/ **1** to fry lightly. **2** to keep (s.o.) on tenterhooks. — /vi/ **3** to make *taʔliyya*. - vn *taʔliyya*; ava *miʔalli*.
تقلية *taʔliyya* /n/ any of a variety of combinations of onions and/or garlic with other ingredients, fried and used as a garnish or to enrich stock or sauce.
اتقلى *ʔitʔalla* /vi/ **1** to be fried lightly. **2** to be kept on tenterhooks. **3** (impersonal) passive of *ʔalla* 3. *ʔil-ʔakla di ma-yitʔalla-lhaa-ʃ* this dish is not made with *taʔliyya*. - iva *mitʔalli*.

ق ل ي [2]
قلاية *ʔallaaya*[2] /n pl *ʔalaali, ʔallayaat/ [Chr]* monk's cell.

ق م ب ع see ق ن ب ع

ق م ح
قمح *ʔamḥ* /coll n/ wheat.
قمحة *ʔamḥa* /unit n, pl *-aat/* **1** a grain of wheat. **2** measure of weight (for metals and precious stones) equal to 0.07523 grains troy weight.
قمحاية *ʔamḥaaya* = *ʔamḥa* 1.
قمحى *ʔamḥi* /adj invar/ light brown, wheat-coloured (especially of human face and features).

ق م ر [1]
قمر *ʔamar* /n pl *ʔaʔmaar/* **1** moon. *ʔamar ʂinaaʕi* satellite. ‖ *ʔamar id-diin* sheet(s) of dried, pressed apricots; drink made by dissolving the sheet in water; pudding made from the sheet. - *ħagar il-ʔamar [min]* selenite. **2** epithet for a beautiful person. *ya bint[i] ya ʔamar* ≈ you gorgeous girl!
قمرة *ʔamara*[1] /n/ **1a** moonlight. - /adjectivally/ *leela ʔamara* a moonlit night. **1b** a moonlit place. — /pl *-aat/* **2** beautiful girl. **3** aperture in or above a door for the purpose of admitting light.
قمرى *ʔamari, ʔamari* /adj/ lunar. *ʔis-sana l-ʔamariyya* the lunar year, lunar calendar.
قمريّة *ʔamariyya* /n pl *-aat/* **1** skylight. **2** arbour.
قمراية *ʔamaraaya* /n/ **1** moonlight. **2** moonlit place.
قمرانى *ʔimaraati* /n pl *-yya/* glazier.
قمّور *ʔammuur* /adj */* cute, sweet, darling.

ق م ر [2]
قمرى *ʔimri, ʔumri* /coll n/ variety of turtle-dove.
قمريّة *ʔimriyya, ʔumriyya* /unit n, pl *-aat/* a turtle-dove.

ق م ر [3]
قمار *ʔumaar* /n/ gambling.
قمارق *ʔumarti, ʔamarti* /n pl *-yya/* gambler, gamester.

ق م ر [4]
قمّر *ʔammar* **1** /vt/ to soften (stale bread) by heating. ‖ *ʃaxalli ʔafaa-k yiʔammar ʕeef* I'll give you a burning slap on the nape! - *rigiʕ ʔafaa yiʔammar ʕeef* he returned humiliated. **2** /vi/ to become softer by heating (of stale bread). - vn *taʔmiir*; ava/pva *miʔammar*.
اتقمّر *ʔitʔammar* /vi/ to be softened by heating (of stale bread). - iva *mitʔammar*.

ق م ر [5]
قمرة *ʔamara*[2] <It *camera*> /n pl *-aat/* cabin (in a ship).

ق م ز
اتقمّز *ʔitʔammiz* /vi/ to move flauntingly. - vn *taʔmiiz*; ava *mitʔammiz*.

ق م س
قاموس *ʔamuusˁ* /n pl *ʔawamiis/* dictionary.

ق م ش [1]
قمشة *ʔamʃa*[1] /n/ (type of) cloth. *ʔiʂ-ʂuuf da ʔamʃit-u miʃ kuwayyisa* this wool is of poor quality.
قماش *ʔumaaʃ* /n pl *ʔaʔmiʃa, ʔumaʃaat/* cloth, fabric.
قماشة *ʔumaaʃa* /unit n, pl *-aat/* **1** piece of cloth. **2** (type of) cloth.
قمّاش *ʔammaaʃ* /n * and pl *ʔammaaʃa/* cloth vendor.
اتقمّش *ʔitʔammiʃ* /vi/ to dress in one's best clothes. - ava *mitʔammiʃ*.

ق م ش [2]
قمشة *ʔamʃa*[2] <T *kamçi*> /n pl *-aat/* whip, lash used by cart-drivers.

ق م ص [1]
قمص *ʔamaʂ (u)* /vt/ to cause to sulk, cause to be sulky. - vn *ʔamʂ, ʔamaʂaan*; ava *ʔaamiʂ*; pva *maʔmuuʂ*.
اتقمص *ʔitʔamaʂ* /vi/ **1** to sulk. **2** to be made sulky. - ava/iva *mitʔimiʂ*.
انقمص *ʔinʔamaʂ* = *ʔitʔamaʂ*. - ava/iva *minʔimiʂ*.
قمّص *ʔammaʂ* /vi/ to buck (of a donkey). - vn *taʔmiiʂ*; ava *miʔammaʂ*.

ق م ص [2]
قميص *ʔamiiʂ* /n pl *ʔumʂaan, ʔiʔmiʂa, ʔimíʂa/* **1** shirt. *ʔumʂaan noom* nightgowns. *ʔamiiʂ taħtaani* slip. **2** piston-casing.
قمصانجى *ʔumʂangi* /n pl *-yya/* shirtmaker.

[3] ق م ص see ق م م ص : *qummuṣ*

ق م ط

قمط *ɋamaṭ (u)* /vi/ to tighten (on or around), squeeze. - vn *ɋamṭ, ɋamaṭaan*; ava *ɋaamiṭ*; pva *maɋmuuṭ*.

قمطة *ɋamṭa* /n/ **1** /pl *-aat*/ instance noun of *ɋamṭ*. **2** /pl *-aat, ɋumaṭ*/ **2a** strip or piece of black cloth, tied like a brow-band, worn to keep a woman's head-covering in place. **2b** vice, clamp.

قماط *ɋumaaṭ* /n pl *ʕiɋmiṭa*/ infant's binder (worn while the navel heals).

قمّاطي *ɋammaaṭi: ṭaɛmiyya ɋammaaṭi* finger-shaped *ṭaɛmiyya*.

قمّط *ɋammaṭ* **1** /vt/ to swaddle the belly of (an infant) with an *ɋumaaṭ*. **2** /vi/ to become tight. - vn *taɋmiiṭ*; ava/pva *miɋammaṭ*.

اتقمّط *ʕitɋammaṭ* /vi/ **1** to be swaddled on the belly with an *ɋumaaṭ* (of an infant). **2** to affect tight clothes (e.g., of a hippie). **3** to become starchy in behaviour. - ava/iva *mitɋammaṭ*.

ق م ع

قمع *ɋumɛ* /n pl *ʕiɋmaaɛ*/ **1** funnel. ‖*ɋumɛ' sukkar* sugar loaf. *-ɛaamil ɋumɛ* he's showing off. **2** *[bot]* calyx.

قمّع *ɋammaɛ* /vt/ to remove the stem end or calyx. *ɋammaɛit il-firawla* she hulled the strawberries. *taɋmiiɛ il-bamya* topping the okra. - vn *taɋmiiɛ*; ava/pva *miɋammaɛ*.

اتقمّع *ʕitɋammaɛ* /vi/ **1** to have the stem end or calyx removed. **2** to swagger, behave in a conceited manner. *ʕinta b-titɋammaɛ ɛala miin* who are you being so high and mighty with! - ava/iva *mitɋammaɛ*.

ق م ق م

قمقم *ɋumɋum* /n pl *ɋamaaɋim*/ bottle with long narrow neck, used for sprinkling scented water. ‖*sakniin fi-ɋumɋum* they live in a tiny place.

ق م ل

قمل *ɋaml* /coll n/ lice.

قملة *ɋamla* /unit n, pl *-aat*/ a louse. ‖*zayy il-ɋamla f-raas il-ʕaɋraɛ [prov]* (as insecure) as a louse on a bald head.

قملاية *ɋamlaaya = ɋamla*.

قمّل *ɋammil* /vi/ to become infested with lice, become lousy. - vn *taɋmiil*; ava *miɋammil*.

ق م م

قمّة *ɋimma* /n pl *ɋimam*/ **1** (also *qimmaʔ*) top, apex. ‖*muʕtamar qimma* summit conference. **2** *[rur]* street corner.

ق م م ص

قمّص *ɋummuṣ* /n pl *ɋamamṣa*/ *[Chr]* archpriest, hegumen.

ق م ي ن

قمينة *ɋamiina* <prob Gr *kaminos*> /n pl *ɋamaayin*/ kiln.

ق ن ا

قنا *ɋina* /prop n/ **1** Qena, province in middle-Upper Egypt. **2** Qena, capital of the province of that name, a town well known for its earthenware products.

قناوي *ɋinaawi* **1** /adj invar/ pertaining to Qena. **2** /n * and pl *ɋinawiyya*/ an inhabitant of Qena.

ق ن ا ل

قنال *ɋanaal* <Fr>: *ɋanaal is-siwees* or *ʕil-ɋanaal* the Suez Canal. - also *kanaal*.

ق ن ب

قنّب *ɋinnib* /n/ twine, hemp. *ḥabl' ɋinnib* a turned hemp rope.

ق ن ب ر

قنبر *ɋambar* **1** /vt/ to cause (usually posteriors or bosoms) to protrude or bulge. *hiyya labsa sutyaan bi-yɋambar bizaz-ha* she is wearing a bra that gives her breasts prominence. **2** /vi/ to become prominent, protrude, bulge. - vn *ɋambara*; ava/pva *miɋambar*.

اتقنبر *ʕitɋambar* /vi/ to become or be made prominent or bulging (especially of posteriors or bosoms). - vn *tiɋambiir*; iva *mitɋambar*.

ق ن ب ع

قنبع *ɋambaɛ* /vi/ to put out seed pods (of a plant). - vn *ɋambaɛa*; ava *miɋambaɛ*.

قنبعة *ɋumbiɛa* /n pl *-aat*/ seed pod.

قنبوعة *ɋambuuɛa* /n pl *-aat*/ one of the connecting pieces which make up a *mafrafiyya* design (see Pl.G, 5).

ق ن ب ل

قنبلة *ɋunbila, ɋunbula* /n pl *ɋanaabil*/ bomb, shell. *ɋanaabil zamaniyya* time-bombs. *ɋunbila yadawiyya* hand-grenade.

ق ن ت

قنوت *ɋunuut: duɛaaʕ il-ɋunuut [Isl]* special prayer of petition inserted after the second morning *rakɛa*.

ق ن د ل [1]
فندل *ʔandil* /vt/ to botch, make a mess of. *ʔin-naggaar ga yiṣallaḥ iṭ-ṭarabeeza ʔandil-ha* the carpenter came to repair the table and made a mess of it. ‖*baxt[i] mʔandil* wretched luck. - vn *ʔandala*; ava/pva *miʔandil*.
مفندل *miʔandil* /n */ hopeless blunderer, good-for-nothing.
اتقندل *ʔitʔandil* /vi/ **1** to be or become botched or messed up. **2** to fail utterly, flop. ‖*ʔitʔandil* ≈ go to hell! - vn *tiʔandiil*; ava/iva *mitʔandil*.

ق ن د ل [2]
فنديل *ʔandiil* /n pl *ʔanadiil*/ **1** oil-lamp. ‖*wallaɛ-lu ʔandiil* he praised him in front of everyone. -*ṣalaat il-ʔandiil [Chr]* prayer accompanying the unction of the sick, traditionally said in private homes as a blessing during Lent. **2** jellyfish.
فنديله *ʔundeela: balaḥ ʔundeela* type of yellow date.

ق ن ز ح
فنزحة *ʔanzaḥa* /n/ *[deris]* snobbishness.
فنزوح *ʔanzuuḥ* /adj pl *ʔanaziiḥ*/ *[deris]* snob.
اتقنزح *ʔitʔanzaḥ* /vi/ *[deris]* to behave snobbishly. - vn *tiʔanziiḥ*; ava *mitʔanzaḥ*.

ق ن ص [1]
قنص *ʔanaṣ (i)* /vt/ to cause to become sulky or moody. - vn *ʔanṣ*; ava *ʔaaniṣ*; pva *maʔnuuṣ*.
قنصة *ʔanṣa* instance noun of *ʔanṣ*.
اتقنص *ʔitʔanaṣ* /vi/ to become or be made sulky or moody. - ava/iva *mitʔiniṣ*.

ق ن ص [2]
فونصة *ʔunáṣa* /n pl *ʔawaaniṣ*/ gizzard.
قناصة *ʔunaaṣa* /n pl *ʔawaniiṣ*/ gizzard.

ق ن ص ل
قنصل *ʔunṣul* <perh It *console*> /n pl *ʔanaaṣil*/ consul. ‖*bint il-ʔunṣul* poinsettia.
قنصليّة *ʔunṣuliyya* /n pl -*aat*/ consulate.
اتقنصل *ʔitʔanṣal* /vi/ to behave snobbishly. *ma-tḥibb[i]-ʃ ḥadd[i] yitʔanṣal ɛaleeha* she doesn't like anybody treating her disdainfully. - ava *mitʔanṣal*.

ق ن ط
قنط *ʔiniṭ* /adj * and pl *ʔunaṭa*/ disdainful, pernickety (usually in respect of food).
أقنط *ʔaʔnaṭ* /el/ more/most disdainful.
قناطة *ʔanaaṭa* /n/ disdain, pernicketiness (usually in respect of food).

اتقنّط *ʔitʔannaṭ* /vi/ to behave disdainfully. - ava *mitʔannaṭ*.
اتفانط *ʔitʔaaniṭ* = *ʔitʔannaṭ*. - ava *mitʔaaniṭ*.
استقنط *ʔistaʔnaṭ* = *ʔitʔannaṭ*. - vn *ʔistiʔnaaṭ*; ava *mistaʔnaṭ*.

ق ن ط ر [1]
فنطر *ʔanṭar* /vt/ **1** to arch, bend in a curve. *ʔanṭar ḍahr-u* he arched his back. **2** to bend or hang (s.th, s.o.) over, drape. *ʔanṭar rooḥ-u min il-balkoona* he leant out over the balcony. - vn *ʔanṭara*; ava/pva *miʔanṭar*.
فنطرة *ʔanṭara* /n pl *ʔanaaṭir*/ **1** arch. **2** bridge. ‖*ʔil-ʔanaaṭir il-xayriyya* /prop n/ the Barrages, situated fifteen miles north of Cairo at the entrance of the Nile Delta. **3** (saddle) pommel.
اتقنطر *ʔitʔanṭar* /vi/ **1** to be arched, be bent in a curve. **2a** to be bent or be hung (over), be draped. **2b** to bend or hang oneself (over), drape oneself (over). - ava/iva *mitʔanṭar*.

ق ن ط ر [2]
قنطار *ʔinṭaar* /n pl *ʔanaṭiir*/ measure of weight equal to 44.93 kg. ‖*bil-ʔinṭaar* ≈ by the hundredweight! as in *bi-tḥibb il-manga - bil-ʔinṭaar* do you like mangoes? - very much, indeed!

ق ن ع [1]
قنع *ʔunuɛ, ʔiniɛ (a)* /vi/ to become content, or satisfied. *ʔil-ʔanaaɛa kinz [prov]* contentment (with one's lot) is a (limitless) treasure. - vn *ʔanaaɛa, ʔanaɛaan, ʔunuɛiyya*; ava *ʔaaniɛ, ʔanɛaan*.
قنع *ʔanaɛ (i)* /vt/ **1** to convince. *laazim tiʔniɛ-u b-ʔinnak ṣaḥḥ* you must convince him that you're right. **2** to satisfy. *ʔaʔall[i] luʔma tiʔniɛ-u* the slightest morsel satisfies him. - vn *ʔanaɛaan*; ava *ʔaaniɛ*; pva *maʔnuuɛ*.
قنوع *ʔanuuɛ* /adj * and pl *ʔunaaɛ*/ content, satisfied.
اتقنع *ʔitʔanaɛ* /vi/ **1** to be convinced. **2** to be satisfied. - iva *mitʔiniɛ*.
أقنع *ʔaʔnaɛ, ʔaqnaɛ* /vt/ to convince. - vn *ʔiqnaaɛ*; ava *muqniɛ*.
اقتنع *ʔiʔtanaɛ, ʔiqtanaɛ* /vi/ to be convinced. *li-ɣayit in-naas ma tiʔtiniɛ* until people are convinced. - ava *muqtaniɛ, miʔtiniɛ*.
استقنع *ʔistaʔnaɛ↓* = *ʔunuɛ*. - ava *mistaʔnaɛ*.

ق ن ع [2]
قناع *ʔinaaɛ↑* /n pl *ʔaqniɛa*/ mask.

ق ن ع ر
قنعر *ʔanɛar* /vt/ *[deris]* to raise or put into prominence

(s.th., usually part of the body) in an ostentatious and arrogant fashion. - vn *qanɛara*; ava/pva *miqanɛar*.
قنعرة *qanɛara* /n/ *[deris]* arrogance, pomposity.
قنعور *qanɛuur* /n pl *qanaɛiir*/ *[deris]* braggart.
اتقنعر *ʔitqanɛar* /vi/ to become arrogant or pompous, behave arrogantly or pompously. - vn *tiqanɛiir*; ava *mitqanɛar*.
استقنعر *ʔistiqanɛar*↓ = *ʔitqanɛar*. - ava *mistiqanɛar*.

ق ن ف [1]
قنف *qunuf, qinif[1] (a)* /vi/ to become revolted or disgusted. *bi-yiddiɛi ʔinnu qinif min libs-a-ha l-makfuuf* he claims to be disgusted by her revealing clothes. - vn *qanafaan, qanaafa*.
قنف *qinif[2]* /adj */ **1** given to being revolted or disgusted. **2** finicky.
أقنف *ʔaqnaf* /el/ more/most given to feeling disgust or revulsion.

ق ن ف [2] see **ق ن ن ا ف** : *qunnaafa*

ق ن ف د
قنفد *qunfid* /n pl *qanaafid*/ hedgehog.
قنفد *qanfid* **1** /vt/ to cause to curl up like a hedgehog. *ʔil-bard' qanfid-ni* the cold made me curl up like a hedgehog. **2** /vi/ to curl up like a hedgehog from the cold. - vn *qanfada*; ava/pva *miqanfid*.
اتقنفد *ʔitqanfid* /vi/ to curl up like a hedgehog. - vn *tiqanfiid*; iva *mitqanfid*.

ق ن ف ذ see **ق ن ف د**

ق ن ل see **ق ن ا ل** : *qanaal*

ق ن م see **ق ن ن و م** : *qannuuma*

ق ن ن [1]
قانون *qanuun[1], qanuun* /n pl *qawaniin, qawaniin*/ law, canon. ‖ *bil-qanuun* in a carefully calculated fashion, as in *bi-yitkallim bil-qanuun* he weighs his words carefully when he speaks.
قانوني *qanuuni, qanuuni* /adj */ lawful, legal, canonical.
مقنّن *muqannan* /n/ fixed amount, ration, quota. *ɛamal-luhum muqannan* he set them a quota. ‖ *bil-muqannan* in a carefully calculated fashion.

ق ن ن [2]
قانون *qanuun[2]* /n pl *qawaniin*/ *[mus]* zither-like instrument with a large trapezoidal sound-box, set horizontally before the performer (see Pl.J, 23).
قانونجي *qanungi* /n pl *-yya*/ *qanuun* player.

ق ن ن [3]
قنّيّة *qananiyya, qaniniyya* /n pl *-aat, qanaani*/ **1** bottle. **2** *[obsol]* glass drinking-bowl. *mala l-qanaani w-saqaa-hum* he filled the pots of wine and gave them to drink.

ق ن ن ا ف
قنّافة *qunnaafa* /n pl *-aat*/ *[rur]* peg on yoke of a plough to which a draft animal's collar is attached (see Pl.D, 9).

ق ن ن و م
قنومة *qannuuma* /n/ mormyr, a Nile fish (Mormyrus kannume).

ق ن ى
قنا *qana[1] (i)* /vt/ to keep (domesticated animals). *bi-yiqni ɦamaam* he keeps pigeons. ‖ *firaax qaniyya* hens kept for laying. - *ya baxt il-qaani* how lucky the husband is! (flirtatious remark to a woman). - vn *qany, qaniyya*; ava *qaani*; pva *maqni*.
قناة *qana[2]* /coll n, pl *quny*/ irrigation channel(s), small canal(s). ‖ *ʔimfi sana wala txaṭṭi qana [prov]* (walk for a year rather than cross a ditch) ≈ slow but sure is best.
قناة *qanaah*↑ /n pl *qanawaat*/ **1** canal. *ʔil-qanaah* or *qanaat is-siwees* the Suez Canal. **2** television channel. — *qanawaat* /pl n/ **3** fallopian tubes.
قناية *qanaaya* /n pl *-aat*/ **1** unit noun of *qana* (see Pl.E, 17). **2** groove.
اتقنى *ʔitqana* /vi/ to be kept (of domesticated animals). - iva *mitqini*.

ق ه ر [1]
قهر *qahar (u)* /vt/ to cause (s.o.) frustration or grief. - vn *qahr*; ava *qaahir*; pva *maqhuur*.
قهر *qahr* /n/ prostrating grief.
قهرة *qahra* /inst n/ **1** state of depression and prostrating grief. **2** sense of oppression and subjugation.
قهران *qahraan* /adj */ oppressed, frustrated.
قاهر *qaahir*↑ /adj/ compelling. *ɛuzr' qaahir* a compelling excuse.
القاهرة *ʔil-qaahira* /prop n/ Cairo.
قاهري *qahri*↑ /adj/ compelling. *ẓuruuf qahriyya* unavoidable circumstances.
قاهري *qaahiri* /adj/ Cairene, pertaining to Cairo.
قهّار *qahhaar* /n/ Vanquishing One, Conquering One (epithet of God).
اتقهر *ʔitqahar* /vi/ to be caused frustration or grief. - iva *mitqihir*.

انقهر ʕinqahar = ʕitqahar. - iva minqihir.

ق ه ر 2
قهر quhr /n/ promiscuity.
قاهر qaahir /adj */ 1 impertinent. 2 promiscuous.

ق ه و
قهوة qahwa 1 /n/ coffee. 2 /n pl qahaawi/ coffee-house, cafe. ‖ bitaaʕ qahaawi idler.
قهوجي qahwagi /n pl -yya/ 1 coffee-house proprietor. 2 coffee-house employee.

ق و ب
قوب quub /n/ [path] tetter.
قوبة quuba /n pl -aat/ patch of tetter.
قوباية qubaaya = quuba.

ق و ت
قوت quut /n pl ʕaqwaat/ foodstuff, nourishment. ʕil-quut iḍ-ḍaruuri essential nourishment.
قوّت qawwit /vt/ to feed, nourish. ʕitḥaramit il-maskiina ḥatta min luqma tqawwit-ha the poor woman was denied even a morsel (enough) to keep body and soul together! - vn taqwiit; ava/pva miqawwit.
اتقوّت ʕitqawwit /vi/ to be fed, be nourished. - iva mitqawwit.

ق و ت ب
قوتب qootab /vi/ to become hunched. qootab min kutr ik-kafya ʕaʃ-ʃuṛl he became hunched from so much bending over (the work). - also ʕitqattib. - ava miqootab.

ق و ح
قاوح qaawiḥ (also kaawiḥ) /vt/ to argue with, wrangle with. qadd iz-zibla wi-mqaawiḥ it-tayyaar [prov] (he is) the size of a (sheep-)dropping and he tries to go against the current. - vn miqawḥa; ava miqaawiḥ.
اتقاوح ʕitqaawiḥ /vi/ to argue, wrangle. - ava mitqaawiḥ.

ق و د
قاد qaadˀ (u) /vt/ to lead, give leadership to. - vn qiyaada; ava qaayid.
قيادى qiyaadi /adj/ leading. door qiyaadi leading role.
قائد qaaʕidˀ /n pl quwwaad, qaada/ leader, commander.
قوّاد qawwaad /n */ pimp.

ق و ر 1
قورة quura /n pl ǧiwar, ǧuwar, ǧuraat/ 1 forehead. ‖ ǧurt-u dayyaǧa he's thick. - ʕifrid ǧurt-ak cheer up! 2 brow-band (of a bridle).
قوّار qawwaar, ǧuwwaar /n pl ǧawawiir/ [rur] broken-off bottom of an earthenware jar (used as a water-dish for chickens). ‖ kasar waraa l-ǧawwaar ≈ he said 'good-bye and good riddance' when he left.
قوّارة qawwaara, ǧuwwaara = ǧawwaar.
مقورة maǧwara /n pl maǧawiir/ vegetable corer.
مقوار miǧwaar or muǧwaar = maǧwara.
قوّر ǧawwar 1 /vt/ to scoop out, hollow out. ǧawwarit ik-koosa she scooped out the courgettes. 2 /vi/ to make a round hollow. ǧawwar ḫawaleen iʃ-ʃagara make a hollow around the tree. - vn taǧwiir; ava/pva miǧawwar.
تقويرة taǧwiira /n pl -aat, taǧawiir/ curved neckline or sleeve-line (of a garment).
مقوّر miǧawwar 1 /adj */ concave. 2 /n pl -aat/ = taǧwiira.
اتقوّر ʕitqawwar /vi/ to be scooped out, be hollowed out, become hollow. - ava/iva mitqawwar.

ق و ر 2
قور ǧawar (i) /vt/ to strain (the eyes). ʕil-muzakra ǧawarit ʕeen-i studying strained my eyes. - vn ǧawar, ǧawaraan; ava ǧaawir; pva maǧwuur.
اتقور ʕitqawar /vi/ to be strained (of the eyes). ‖ ʕiʃtaʁal lamma tqawarit ʕeen-u ≈ he worked until his eyes popped out. - iva mitqiwir.

ق و ر م
قاورمة ǧawirma <T kavurma> /n/ dish of braised meat cooked with onions.

ق و ز ى
قوزى ǧuuzi <T kuzu> /adj invar/ young (of mutton). xaruuf ǧuuzi lamb.

ق و س
قوس ǧoos /n pl ʕiqwaas/ 1a arc, curve. 1b parenthesis, bracket. ‖ ḫuṭṭ' di been ǧoseen keep this aside, make a mental note of this for the moment. 1c bow. ʕil-ǧoos [astrol] Sagittarius. ǧoos rabaaba rebab bow (see Pl.J, 2). ǧoos il-minaggid cotton-fluffer's bow. 2 plough shaft (see Pl.D, 14).
قوّس ǧawwis 1 /vt/ to curve, bend in a curve. ǧawwis il-ʕuud he bent the stick. 2 /vi/ to curve, bend in a curve. ḍahr-u ǧawwis his back arched. ʕis-saqfˀ ǧawwis the ceiling has sagged. - vn taǧwiis; ava/pva miǧawwis.
اتقوّس ʕitqawwis /vi/ to be curved, be bent in a curve. - iva mitqawwis.

ق و ط [1]
قوّط *ʔawwaṭ* /vt/ to swindle by overcharging. -vn *taʔwiiṭ*; ava/iva *miʔawwaṭ*.
مقوّطاتي *miʔawwaṭaati* /n pl *-yya*/ one who swindles by overcharging.
اتقوّط *ʔitʔawwaṭ* /vi/ to be overcharged. -iva *mitʔawwaṭ*.

ق و ط [2]
قوطة *ʔuuṭa* /coll n/ tomato(es).
قوطاية *ʔuṭaaya* /unit n, pl *-aat*/ a tomato.

ق و ط ع
قوطع *ʔooṭaʕ, ʔooṭiʕ* /vi/ to make a guess concerning things supposed to be known only to God (e.g., life span, future gains etc., such an act being tantamount to blasphemy). *min ɣeer* (or *bala*) *mʔoṭʕa* barring the unforeseen, God willing, as in *ħa-nsaafir bukra bala mʔoṭʕa* we're leaving tomorrow if all goes well. -also *ʔaaṭiʕ*. -vn *miʔoṭʕa*; ava *miʔooṭaʕ*.

ق و ع
قاع *qaaʕ*↑ /n pl *qiʕaan*/ bottom, bottom part. *qaaʕ il-baħr* bottom of the sea. ‖*qaaʕ il-ʕeen [anat]* retina.
قاعة *qaaʕa*↑ /n pl *-aat*/ hall (e.g., for lectures, concerts). *qaaʕit muħaḍraat* lecture hall.
قاعة *ʔaaʕa* /n pl *ʔiʕaan, ʔaʕaat/ [rur]* winter room which has a built-in *furn* (q.v.) under a raised floor.

ق و ق [1]
قواق *ʔuwaaʔ* /n/ screeching (like that of an owl). *ʕil-waad ma-baṭṭal-ʃ' ʔwaaʔ* the baby never stopped screaming.
قويق *ʔuweeʔ: ʕumm' ʔweeʔ* **1** owl. **2** woman of witch-like appearance.
قوّق *ʔawwaʔ* /vi/ **1** to screech. **2** to acquire a pale and withered appearance (especially of the face or features). -vn *taʔwiiʔ*; ava *miʔawwaʔ*.

ق و ق [2] see ق و و ق : *ʔawuuʔ*

ق و ق ع
قوقع *ʔooʔaʕ* /coll n/ snail(s).
قوقعة *ʔuʔáʕa* /n pl *ʔawaaʔiʕ*/ a snail.
تقوقع *ʕitʔawqaʕ*↑ /vi/ to become introverted, withdraw into one's shell. -ava *mitʔawqaʕ*.

ق و ل [1]
قال *ʔaal (u)* /vt/ **1a** to utter, say. *ma-ʔult'-ʃ kilma* I didn't say a word. *ʔaal (ʕinnu) ħa-yiigi bukra* he said (that) he would come tomorrow. ‖*ʔuul ya rabb* ≈ rely on God! trust in God! -*ma-tʔul-ʃ' kıda* don't say such (things)! don't say (things) like that! -*zayy' ma rabb-i-na yʔuul* as God wills (it). -*tiʔuul ʕeeh* ≈ (it's absurd) but what can one say, what can be done about it? as in *dılwaʔti l-banaat maʃyiin ʕıryaniin laakin tiʔuul ʕeeh* these days girls walk about half-naked, but what is there one can say? -*b-aʔuul(-lak) ʕeeh* (1) say, I say, as in *b-aʔuul ʕeeh - ħa-tiigi ʕandina bukra* I say, are you coming to see us tomorrow? *b-aʔul-lak ʕeeh - gibt ik-kitaab illi kkallimna ʕalee* say, did you bring the book we were talking about? (2) (I'll) tell you what, as in *b-aʔul-lak ʕeeh - haat ʕinta l-gibna w-ʕana ħ-aruuħ ʕagiib il-ʕeef* tell you what, you bring the cheese and I'll go and get the bread, *b-aʔul-lak ʕeeh baʔa - niruuħ yoom il-itneen* tell you what, then, we'll go on Monday. **1b** to recite, say (poetry). *ʔaʕad yiʔuul mawwaal fi-mawwaal* he continued to recite one *mawwaal* after another. **1c** to tell, recount. *ʔul-li lli ħaṣal* tell me what happened! *ʔal-li sirr* he told me a secret. *kaan bi-yʔul-lina ʕar-riħla* he was telling us (something) about the trip. **2** to stipulate. *ʕil-qanuun bi-yʔuul is-siwaaʔa ʕal-yimiin* the law requires that driving be on the right-hand side (of the road). *ʕiz-zooʔ yiʔuul laazim ʕaruuħ* politeness demands that I go. *ʕil-masal bi-yʔuul xud il-habla bint il-ʕaʔla* the proverb recommends one to marry the daughter of a well-balanced mother even if the daughter herself is unbalanced. -vn *ʔool, ʔiwaala, ʔawalaan*; ava *ʔaayil*.

¶ *ʔaal* modal of incredulity ≈ just imagine! fancy that! as in *ʔaal ʕeeh - xaayif min il-ʔuṭṭa* just think! he's afraid of the kitten! *ħa-yitgawwiz - ʔaal* he's getting married! fancy that! *badal ma ylaaʕib il-ʕayyil ʔaal ʕeeh - yufxuṭ fii* instead of playing with the kid - can you credit it - he bawls him out! -*ʔaal ... (ʔaal)* exclamation of jeering disbelief ≈ nonsense! baloney! humph! as in *ʔaal hiyya mumassila* so she's an actress - baloney! *ʔaal il-fariiʔ ga yʃuf-ha ʔaal* so the General came to see her, eh? what a load of rubbish! -*(bi-)tiʔuul fiiha* exclamation of strong assertion ≈ no question about it! you bet! you said it! as in *ʔidirt' trudd[a] ʕal-mudiir - bi-tʔuul fiiha w-ʃatamt-u kamaan* 'Did you dare to answer the boss back?' 'You bet I did! and I cursed him too!' *ʕeeh raʕy-ak nirawwaħ nitɤadda - bi-tʔuul fiiha* 'What do you say to going home for lunch?' 'You bet!' -*ʔaal ʕala-* (1) to mention, refer to. *ma-ʔult'-ʃ ʕalee bil-ʕism* you didn't mention him by name. *ʔult' ʕal-ħıkaaya l-ʕabuu-ya* I mentioned the matter to my father. (2) to ask for in marriage. *naas kitiir ʔaalu ʕalayya bass' ʕana ma-rḍit-ʃ* I had a lot of

suitors but I refused them all. (3) to gossip (usually maliciously) about. *bi-yquulu ɛaleeha kalaam kitiir* they say a lot (of nasty things) about her. - *quul* ... say .... *ʕadfaɛ-lak dilwaqti quul ɛafara gneeh* I'll pay you now, say ten pounds. *kull*^{i} *waaḥid minkum ḥa-ygiib quul talaata mitr* each one of you will bring, let's say, three metres. - *tiqul-f* (you might (almost) say) ≈ just as if, as in *bi-yqaffil beet-u b-xamas qifaal tiqul-f il-bank il-ʕahli* he locks up his house with five padlocks as if it were the National Bank, *bi-tiʃtim fii tiqul-f inta lli zooq* you are running him down as if you were polite yourself!

قولة *qoola* /inst n, pl *-aat*/ a saying, an utterance. *ma-tqul-f il-qoola di* don't you say that!

قالة *qaala* /n/ (unpleasant) rumour, what the word is.

قل *qill: qal(-lu) l-qill* response indicating one's annoyance at being told 'I told you so' ≈ to hell with what you said! *miʃ ʕana qult-i-lak kida - qal-lak il-qill* 'Didn't I tell you so?' - 'To hell with what you told me!'

أقوال *ʕaqwaal* /pl n/ court testimony.

مقال *maqaal*$^{\uparrow}$ /n pl *-aat*/ essay, article.

مقالة *maqaala*$^{\uparrow}$, *maqaala*$^{\uparrow}$ = *maqaal*.

اتقال *ʕitqaal* /vi/ passive of *qaal*. *da kalaam ma-yitqal-ʃ* that's something that shouldn't be said. - iva *mitqaal*.

انقال *ʕinqaal* = *ʕitqaal*. - iva *minqaal*.

قوّل *qawwil* /vt/ to attribute (e.g., a statement) falsely to (s.o.). *ya bagaḥt-ak - ḥa-tqawwil-ni lli ɛumr-i ma-qult-u* what a nerve you've got! are you going to attribute to me things I never said? - vn *taqwiil*; ava *miqawwil*.

مقوّلاتى *miqawwilaati* /n pl *-yya*/ one who engages in the false attribution of words to others.

اتقوّل *ʕitqawwil* /vi/ **1** to have words falsely attributed to one, have words put in one's mouth. **2** to be falsely attributed (to s.o., of, e.g., a statement). - ava/iva *mitqawwil*.

¶ *ʕitqawwil ɛala*$^{\uparrow}$ to gossip about, spread (damaging) reports about.

قاول *qaawil* **1** /vt/ to enter into a contract with (s.o.). *qawilt-u ɛal-buna* (1) I contracted the building-work out to him. (2) I contracted to do the building for him. **2** /vi/ to take on the role of contractor. *qaawil ɛal-buna liyya* he took on the building contract for me. - vn *miqawla*; ava *miqaawil*.

مقاولة *muqawla, miqawla* /n pl *-aat*/ contract, deal, transaction. *ʃirkit muqawlaat* contracting company. ‖*bil-miqawla* on a piece-work basis, by the job.

مقاول *miqaawil* /n */ contractor.

اتقاول *ʕitqaawil* /vi/ **1** to assign or be assigned a task on a contracted basis. **2** to enter jointly into a contract. - ava/iva *mitqaawil*.

² ق و ل

قول *qool* <T *kol*> /n pl *-aat*/ *[mil obsol]* convoy, column.

ق و ل ح

قولح *qoolaḥ* /coll n/ corn cob(s).

قولحة *qolâḥa, qolḥa* /unit n, pl *qawaaliḥ*/ a corn cob.

ق و ل و ن

قولون *qawloon*$^{\uparrow}$ /n/ *[anat]* colon.

¹ ق و م see also ¹ ق ى م

قام *qaam*^{1} *(u)* /vi/ **1a** to stand, get up, arise. *quum ɛala ḥeel-ak* stand up! *qaam min ɛala l-maktab* he got up from the desk. **1b** to recover from a state or condition. *qumt*^{i} *min in-noom* I woke up. *lissa ma qamit-ʃ*^{i} *min il-muṣiiba* she hasn't yet recovered from the disaster. *ʕin ʃaaʔ allaah ḥa-tquum ɛala xeer* God willing you'll recover. **2** to go into action. *ʕil-hawa qaam* the wind rose. *ʕil-mutoor ma-bi-yqum-ʃ* the motor won't start. **3** to depart. *ʕil-qaṭr*^{i} *qaam min il-maḥaṭṭa* the train left the station. ‖*quum biina* let's get going. **4a** modal of launching an action. *quumu ʃtiku* go and complain! *qumt*^{i} *ladaɛt-u qalam* I upped and slapped him. *quum ruuḥ* get going! **4b** modal of consequent action. *nisiit maḥfaẓt-i fil-beet qumt*^{i} *rgiɛt* I forgot (and left) my wallet at home so I came back. *ma-fakkart-uu-ʃ qaam ma-gab-ʃ ik-kitaab* I forgot to remind him so he didn't bring the book. *qaddimt-i-lu l-kart*^{i} *qaam baṣṣ*^{i} *fii w-raggaɛ-u taani* I presented the card to him and he looked at it and gave it back. - vn *qoom, qawamaan, qiyaam*; ava *qaayim*.

¶ *qaam ɛala* (1) to rise up against. *ʕin-naas qaymiin ɛala l-ḥukuuma* people are revolting against the government. *ʕid-dunya qayma ɛalayya* everyone is up against me. (2) to set about (doing s.th.) to (s.o. or s.th.). *qaamit ɛal-ɛiyaal ḥammit-hum wi-labbisit-hum* she turned to the kids and bathed and dressed them. - *qaam bi-* to deal with, attend to, cope with. *ʕana ḥ-aquum bit-takaliif* I'll see to the expenses. *qaam bil-miɛza l-waḥd-u* he polished off the (whole) goat on his own.

قام *qaam*^{2} *(i)* /vt/ **1a** to raise, lift up. *qaam ik-kubbaaya ɛala ʃafayf-u* he raised the cup to his lips. **1b** to set upright. *qiim il-ɛimdaan ɛal-ḥeeṭa* set the props up against the wall. **2a** to mount, set up. *qimt il-laḥma ɛan-naar* I put the meat on the fire. *qaam if-ʃanṭa ɛala*

kitf-u he lifted the suitcase on his shoulder. **2b** to hold, set up. *ḥa-nqiim faraḥ kibiir* we're going to put on a big wedding celebration. **3** to perform (a ritual prayer). *qaam iṣ-ṣala ɛala rooḥ il-mawta* he said the prayer for the souls of the deceased. ‖ *ʔil-ʔimaam qaam iṣ-ṣala [Isl]* the imam uttered the formula signalling the worshippers to rise for the prayers. - vn *qiyaam*; ava *qaayim*.

قيام *qiyaam* /n/ *[text]* warp.

القيامة *ʔil-qiyaama* /n/ the Resurrection. *ɛiid il-qiyaama [Chr]* Easter. *yoom il-qiyaama [Isl]* the Day of Judgement. ‖ *(wi-)qaamit il-qiyaama* ≈ (and) all hell broke loose!

قومة *qooma* /inst n, pl *-aat*/ a standing up, a getting up. *qaam nuṣṣ' qooma* he half rose. *w-allaah-i ma-nta qaayim - ya salaam dil-qooma liik* 'You really mustn't trouble yourself to get up!' 'My goodness! If one gets up for anyone it should be for you!'

قايم *qaayim* **1** /ava/ ‖ *ʔil-balad qayma ɛala rigl* the town is hopping with excitement. - *qaayim naayim* always, constantly, as in *qaayim naayim yikallim nafs-u* he's always talking to himself. - *qaayim bi-zaat-u* autonomous, as in *ʔil-butagaaz luh xazzaan qaayim bi-zaat-u* the gas stove has a separate tank. - *wazn' qaayim* gross weight. - *keel qaayim* loosely-filled or loosely-packed measure. **2**↑ /n pl *qawaayim*/ any vertical support, prop, pillar.

قايمة، قائمة *qayma* /n pl *qawaayim*/ **1** any vertical support, prop, pillar, post. *qaymit ṭarabeeza* table leg. *qaymit baab* door post. **2** list. *qaymit il-mamnuɛiin* black-list. ‖ *qaymit il-ɛaff* list of items of furniture which a bridegroom is sometimes required by the bride's family to sign as guarantor of their value in case of loss, damage or divorce.

قامة *qaama* /n pl *-aat*/ **1** stature, build. **2** surveyor's levelling staff.

قوام *qawaam*↑ /n/ **1** consistency. *ʔiṭ-ṭiin wi-huwwa ɛagiina qawaam-u zayy il-ɛasal* the clay, while it is a soft mass, has the consistency of honey. **2** stature, build. — /adv/ **3** (also *qawaam-ak*) quickly, right away.

قيّوم *qayyuum* /n/ Everlasting One, Eternal One (epithet of God).

اتقام *ʔitqaam* /vi/ passive of *qaam*[2]. - iva *mitqaam*.

قوّم *qawwim* /vt/ **1a** to cause to stand, cause to rise. *qawwim il-ḥumaar* get the donkey on its feet! *qawwimna l-xeema* we put up the tent. *qawwim ʃaɛr-i* it made my hair stand on end. ‖ *qawwim nifs-i* it made my gorge rise, it made me feel sick. **1b** *[Chr]* to resurrect. **2** to set in motion, activate. *qawwim il-ɛarabiyya* he started up the car. *qawwimna xnaqaat kitiira* we picked a lot of quarrels. *qawwim fil-balad zeeṭa* he raised a rumpus in the town. ‖ *qawwimna muḥaami* we hired a lawyer. **3a** to cause to depart, cause to set off. *qawwim-ni badri min maṣr* he got me to leave Cairo early. **3b** to send off, dispatch. *ḥa-nqawwim-lak ɛarabiyya* we'll send a car for you. *qawwim-u bi-mutusikl* he sent it off by motor-cycle. *qawwim lagna* he sent off a committee. - vn *taqwiim*; ava/pva *miqawwim*.

¶ *qawwim ɛala* to incite against, set against. *qawwimit-hum ɛaleena* she set them up against us. - *qawwim bi-* to cause to attend to, cause to see to. *qawwimuu-ni bil-ʔakl* they got me to see to the food.

تقويم *taqwiim* /n pl *taqawiim*/ calendar. *ʔiz-ziraaɛa f-maṣr' qayma ɛat-taqwiim il-qibṭi* the agricultural cycle in Egypt follows the Coptic calendar.

اتقوّم *ʔitqawwim* /vi/ **1a** to be stood up, be erected, be raised. **1b** *[Chr]* to be resurrected. **2a** to be caused to depart. **2b** to be sent off, be dispatched. - iva *mitqawwim*.

¶ *ʔitqawwim ɛala* to be incited against, be set against.

قاوم *qaawim* /vt/ to resist, oppose. *qaawim it-taɛab* he resisted fatigue. *muqawmit-u (li-)l-ɛaya* his resistance to the disease. - vn *muqawma*; ava *miqaawim*.

مقاومة *muqawma* /n/ **1** *[phys]* resistance. **2** *[pol]* resistance movement.

أقام *ʔaqaam*↑ **1** /vt/ to erect, put up. *niqim-lu timsaal* we erect a statue to him. **2** /vi/ to stay, reside. ‖ *taḥdiid ʔiqaama [leg]* house arrest. - *(taʔfiirit) il-ʔiqaama* residence visa. - vn *ʔiqaama*; ava *muqiim*.

استقام *ʔistaqaam*[1] *(yistiqiim)* /vi/ to become right or proper. *ɛaawiz ʔatgawwiz w-astaqiim* I want to get married and lead a decent life. ‖ *xaṭṭ' mustaqiim* a straight line. - *ḍarba mustaqiima ymiin* straight right (in boxing). - vn *ʔistiqaama*; ava *mustaqiim, mistiqiim*.

استقام *ʔistaqaam*[2], *ʔistiqaam*↓ *(yistaqaam)* **1** /vt/ to straighten out, unbend. *mumkin tistaqam-li l-ḥadiida di* could you straighten out this piece of iron for me? **2** /vi/ to become unbent. *ʔil-maɛwuug yistaqaam ɛas-sindaal [prov]* (the crooked (object) straightens up on the anvil) ≈ those who don't mend their crooked ways voluntarily will be set straight by force. - ava/pva *mistaqaam*.

مستقيم *mustaqiim* /adj */ correct, proper. *raagil mustaqiim* an upright man. *ʔiṣ-ṣiraaṭ il-mustaqiim* ≈ the straight and narrow.

ق و م [2]

قوم *qoom: min ɛaaʃir il-qoom ʔarbiɛiin yoom ṣaar minhum [prov]* (1) the people among whom one lives

are considered one's kinsfolk. (2) if you live amongst people (even for as little as) forty days you find that you acquire their habits.
قومى *qawmi↑* /adj */ national. *ʕil-ʕamn il-qawmi* national security.
قوميّة *qawmiyya* /n/ **1** nationalism. **2** /pl *-aat*/ ethnic group.

ق و ن
قون *ʔuuna* /n pl *-aat*/ *[Chr]* icon. - also *ʕiquuna*.

ق و ن ص see ² ق ن ص

ق و و ق
قاووق *ʔawuuʔ* <T *kavuk*>: *hazz-i-l(u) ʔawuuʔ* (to shake one's cap for s.o.) to be obsequious to (s.o.).

ق و و ن
قاوون *ʔawuun* <T *kavun*> /coll n/ variety of musk-melon.
قاوّونة *ʔawwuuna* /unit n, pl *-aat*/ a musk-melon.

¹ ق و ى
قوى *ʔiwi (a)* /vi/ to find strength, become strong. *huwwa ma-yiʔwaa-ʃ ʕala ʃeel il-ħiml[i] da* he isn't strong enough to carry this load. - vn *ʔiwwa, ʔuwwa*; ava *ʔawyaan*.
قوّة *ʔuwwa* or *ʔiwwa* /n/ power, strength. *ʔuwwit if-ʃaʕb[i] tibʔa ʔuwwit ig-geeʃ* the strength of the people is the strength of the army. *ʔiwwit il-mutoor* the power of the motor. *bi-ʔuwwa* strongly, firmly, powerfully. ‖*bil-ʔiwwa* with considerable effort, as in *bi-yitnaffis bil-ʔiwwa* he can hardly breathe. - *ya ʔiwwit illaah* exclamation of wonderment at the immensity, magnitude or might of something ≈ such is the power of God!
قوى *quwa: ʕalʕaab il-quwa* track and field sports. *ʕil-quwa l-ʕamla* (1) labour force. (2) (also *ʕidaarit il-quwa l-ʕamla*) government employment agency.
قوّات *quwwaat: quwwaat il-geeʃ* the army forces. *ʕil-quwwaat il-musallaħa* the armed forces.
قوى *ʔawi* **1** /adj * and pl *ʔuwaay, ʕaʔwiya*/ strong, powerful. *raagil ʔawi* a strong man. *riiħa ʔawiyya* powerful smell. *garra ʔawiyya* strong pull. ‖*ʕarḍ[i] ʔawiyya* rich fertile land. - *miʃ ʔawi* not much to speak of, not so good, as in *ʕil-maktab ħilw[i] bass if-fuṛl[i] miʃ ʔawi* the office is pleasant but the work is only so-so. **2** /adv/ to a great degree or extent. *ħilw[i] ʔawi* very pretty. *mumkin ʔawi* quite possible. *kifaaya ʔawi* quite enough. *ʕagib-ni ʔawi* it pleases me very much. **3** (also *ʔawi*) /n/ Almighty One, Omnipotent One (epithet of God).
أقوى *ʕaʔwa, ʕaqwa* /el/ stronger/ strongest.
قوّى *ʔawwa* /vt/ to strengthen, fortify. *ʕil-gumbaaz bi-yʔawwi l-ʕaḍalaat bitaaʕit il-gism* gymnastics strengthen the body's muscles. *rabb-i-na yʔawwii-k* may God give you strength (to s.o. up against a difficult task). - vn *taʔwiyya*; ava/pva *miʔawwi*.
مقوّى *miʔawwi* or *muʔawwi, muqawwi* /n pl *-yaat*/ **1** strengthener, fortifier. **2** *miʔawwiyaat, muqawwiyaat* /pl n/ vitalizing medicines, tonics.
اتقوّى *ʕitʔawwa* /vi/ to be strengthened, be fortified. - iva *mitʔawwi*.
استقوى *ʕistaʔwa* /vt/ to consider strong. ‖*bi-yistaʔwa nafs-u* (he thinks himself strong) ≈ he throws his weight around. - ava *mistaʔwi*.

² ق و ى see ² ت ق ى : *taʔaawi*

ق ى ا س
قياس *ʔiyaas[i]* /n pl *ʕiʔyisa, ʔiyʕisa, ʔiyasaat*/ large reed mat.

ق ى ء
قيء *ʔeeʕ↑* /n/ vomiting.
مقيّئ *muqayyiʕ* **1** /adj/ emetic, vomitive. *ʕadwiya muqayyiʕa* emetic medicines. **2** /n pl *-aat*/ emetic, vomitive.
اتقايا *ʕitʔaaya* /vt/ to vomit. - vn *miʔayaah*; ava *mitʔaaya, mitʔaayi*.
استقايا *ʕistiʔaaya↓* /vt/ to vomit. *ʕistiʔaaya kull illi kal-u* he vomited everything he'd eaten. - ava *mistiʔaaya, mistiʔaayi*.

ق ى ت see ق ت ى : *maʔaata*

ق ى ح
قيح *ʔeeħ* /n/ pus. ‖*ʕumm il-ʔeeħ* core of a boil.
قيّح *ʔayyaħ* **1** /vt/ to cause to suppurate, cause to fester. *ʕiltihaab ig-garḥ[i] ʔayyaħ-u* the inflammation of the wound made it fester. **2** /vi/ to suppurate, fester. *ʕil-garḥ[i] b-yifḍal yiʔayyaħ* the wound continues to fester. - vn *taʔyiiħ*; ava *miʔayyaħ*.
اتقيّح *ʕitʔayyaħ* /vi/ to suppurate, fester, be caused to suppurate, be caused to fester. - ava/iva *mitʔayyaħ*.

¹ ق ى د
قيد *ʔeed* /n/ **1** /pl *ʔuyuud*/ **1a** bond, fetter, hobble. ‖*ʔeed il-miħraat* rope by which the yoke of the plough is

attached to the beam. **1b** restriction, reservation. **2** /pl *ɋuyudaat/* **2a** entry, registering, booking. *raḫḫal il-ɋuyudaat lid-daftar ir-rasmi* transfer the entries to the official ledger. *kaatib ɋuyudaat* registrar. **2b** enrolment. *ʈalab il-ɋeed* application for enrolment.

قيّد *ɋayyid* /vt/ **1a** to bind, tie up, hobble. ‖*ɋayyid ya rfaaɛi [obsol]* render (it) harmless, Saint Rifa'i (on seeing a snake). **1b** to restrict, limit. *ma-tɋayyid-f' ḫurriyyit-i* don't limit my freedom! **2a** to register, note down. *bi-nɋayyid il-mabiɋaat il-yomiyya fid-daftar* we enter the daily sales in the ledger. **2b** to enroll. - vn *taɋyiid*; ava/pva *miɋayyid*.

اتقيّد *ʃitɋayyid* /vi/ passive of *ɋayyid*. - iva *mitɋayyid*.

ق ى د [2] see also و ق د

قاد *ɋaad (i)* **1** /vt/ to light, kindle. *ɋaad il-lamba* he lit the lamp. ‖*ɋaadit in-naar fi-ɋalb-i* she set my heart aflame. **2** /vi/ to catch fire, burn. *ʃin-naar ɋayda* the fire is lit. ‖ *ʃil-beet ɋaayid naar* the house is in a turmoil. - vn *ɋiyaada, ɋayadaan*; ava *ɋaayid*.

اتقاد *ʃitɋaad* /vi/ passive of *ɋaad*. - iva *mitɋaad*.

انقاد *ʃinɋaad* = *ʃitɋaad*. - iva *minɋaad*.

ق ى د [3] see ق و د : *ɋiyaada*

ق ى د و م see ق د م [2] : *ɋayduuma*

ق ى س [1]

قاس *ɋaas (i)* /vt/ **1** to measure, take the measurement of. *ɋaas il-masaafa* he measured the distance. ‖*waaxid is-sikka ɋiyaas* he travels back and forth along the road. **2** to try on for size. *ɋiisi l-fustaan ɋabl' ma tiʃtirii* try on the dress before you buy it. **3** to probe (a hen) for an egg. - vn *ɋiyaas, ɋayasaan*; ava *ɋaayis*.

قياس *ɋiyaas*[2] /n pl *-aat*/ measure, measurement.

قياسة *ɋiyaasa* /inst n, pl *-aat*/ a measuring. *seef (or dibal) ɋiyaasa* ring gauge.

قيّاس *ɋayyaas* /n * and pl *ɋayyaasa*/ **1** one who measures. **2** (land) surveyor.

قيّاسة *ɋayyaasa* /n/ type of large sailing boat with a high prow.

مقاس *maɋaas* /n pl *-aat*/ **1** size, dimension. *maɋaas gazma* shoe-size. **2** measuring instrument (e.g., measuring tape, dip-stick).

مقياس *miɋyaas* /n pl *maɋayiis*/ **1** measuring instrument, gauge. *miɋyaas in-niil* the Nilometer. **2**↑ (also *miqyaas*, pl *maqayiis*) standard. *bi-ʃayy' miqyaas* by any standard.

اتقاس *ʃitɋaas* /vi/ to be measured. - iva *mitɋaas*.

انقاس *ʃinɋaas* = *mitɋaas*. - iva *minɋaas*.

مقايسة *muɋaysa* /n pl *-aat*/ **1** specification (of dimensions, materials etc. required of a job). **2** preliminary cost estimate.

ق ى س [2] see ق ى ا س : *ɋiyaas'*

ق ى ش

قايش *ɋaayiʃ* <T *kayɪʂ*> /n pl *ɋawaayiʃ*/ **1** leather strap (especially one used as a razor-strop). **2** thick leather belt (especially the type worn by soldiers).

قيّش *ɋayyiʃ* **1** /vt/ to beat with a leather strap. **2** /vi/ to dress in one's best, be dressed in one's best. - vn *taɋyiiʃ*; ava/pva *miɋayyiʃ*.

اتقيّش *ʃitɋayyiʃ* /vi/ **1** to be beaten with a leather strap. **2** to dress or be dressed in one's best. - ava/iva *mitɋayyiʃ*.

ق ى ص ر

قيصرى *ɋayṣari: (ɛamaliyya) ɋayṣariyya [surg]* Caesarean section.

ق ى ض

قايض *ɋaayiḍ* /vt/ to barter with (s.o.), trade with (s.o.) by exchange of commodities. *ɋayiḍ-ni ɛala ɋamiiṣ bi-ḫittit ɋumaaʃ* he traded me a piece of cloth for a shirt. - vn *ɋiyaaḍ, muɋayḍa*; ava *miɋaayiḍ*.

مقايضة *muɋayḍa* /n pl *-aat*/ barter deal.

اتقايض *ʃitɋaayiḍ* /vi/ **1** to barter, trade by the exchanging of commodities. **2** (impersonal) passive of *ɋaayiḍ*. *ʃil-ḫagaat di ma-yitɋayiḍ-ʃ' ɛaleeha* these things are not to be bartered. - ava/iva *mitɋaayiḍ*.

ق ى ف

قيافة *ɋiyaafa* /n/ style, elegance, chic. *kaan laabis ʃaaxir ɋiyaafa* he was very stylishly dressed. ‖ *ʃil-bint' di ɋiyaafa* that girl is a regular fashion-plate.

اتقيّف *ʃitɋayyif* /vi/ to dress stylishly and with chic. - ava *mitɋayyif*.

ق ى ل [1]

استقال *ʃistaɋaal, ʃistaqaal* /vi/ to resign. - vn *ʃistiɋaala*; ava *mistaɋiil, mustaɋiil*.

استقالة *ʃistiɋaala* /n pl *-aat*/ (letter of) resignation.

ق ى ل [2]

قيّالة *ɋayyaala* /n/ midday heat, hottest part of the day.

قيّل *ɋayyil* /vi/ **1** to be burning, be scorching (of midday heat). *ʃil-ɋayyaala ɋayyilit ɛaleena* the midday heat

blazed around us. **2** to rest in the hottest part of the day. *kaanu mqayyiliin taḥt' fagara* they were taking a siesta under a tree. -vn *taqyiil*; ava *miqayyil*.

تفييله *taqyiila* /n pl *-aat*/ midday rest, rest in the hottest part of the day. *xud-lak taqyiila* take a siesta.

ق ى ل ط see ³ ق ل ط : *qeelaṭ*

¹ ق ى م see also ¹ ق و م

فيمة *qiima* /n pl.*qiyam*/ **1** value, worth. *qimt-u qaliila* it's of little value. *ʕiftaxalt' b-qiimit il-xaraama* I did work to the value of the fine. ‖ *bint" ɛaleeha l-qiima* a respectable-looking girl. **2a** approximate duration. *baɛd' qiimit sana* after about a year's time. *min qiimit mudda* (1) some time ago. (2) for some time past. **2b** approximate measure. *qiimit nuṣṣ' santi* about half a centimetre. *gaab qiimit kiilu sudaani* he brought about a kilo of peanuts.

فيّم *qayyim* /adj */ *[deris]* precious (of a person).

مقام *maqaam* /n pl *-aat*/ **1** worth, status. *kibiir il-maqaam* of high standing. *ɛayza raagil yiɛraf maqaam-i* I want a man who appreciates (the worth of) me. ‖ *ʕin-naas maqamaat* ≈ not everyone has the same worth. *-huwwa-ḫna miʃ qadd il-maqaam* so (you imagine) we're not up to standard? *-bi-yiɛmil maqaam li-mraat-u* he treats his wife with respect. *-ʕism-alla ɛala maqaam-ak [women in trad soc]* ≈ begging your pardon, no offence intended (often prefaces a contradiction, objection or mention of any mundane or lowly object; cf *muʃaxza*). **2** tomb of a saint, site of a saint's tomb wherein his presence is thought to be felt. **3** *[mus]* mode, scale, melody type (in Arabic music).

قيّم *qayyim*¹↑ /vt/ to estimate, value, appraise. -vn *taqyiim*; ava *muqayyim*.

اتقيّم *ʕitqayyim* /vi/ to be estimated, be valued, be appraised. *ʕil-xaatim da mitqayyim bi-kaam* how much is this ring valued at? -iva *mitqayyim*.

² ق ى م see ¹ ق و م : *qaam, qiyaam, ʕil-qiyaama, qaayim, qayma, qayyuum*

ق ى ى see ء ق ى ى : *ʕitqaaya*

ق ى ى م

قيّم *qayyim*² <Syr> /n */ sacristan (in the Coptic Church).

ك

ك

ك *ka-*↑ prefixed preposition indicating role, capacity or status. *bi-yiḥtifiẓ bii ka-ʃarfiif bi-yirgaʕ ʃilee fi-ʃayy' waqt* he keeps it as a record to which he can refer at any time. *tanẓiim il-maktab ka-kull* the organization of the office as a whole.

¶ *ka-ma* (1↑) /conj/ as, just as. *kaan ʕiryaan ka-ma wildit-u ʃumm-u* ≈ he was as naked as the day he was born. (2↓) /prep/ like. *mifi ka-ma l-kalb* ≈ he left with his tail between his legs. — *ka-misl*↓ /prep/ like. *bint' ka-misl il-qifṭa* ≈ a girl like peaches and cream. - /adverbially, by ellipsis/ *ʃixsil il-ʕarabiyya bil-gaaz wil-luuri ka-misl* wash the car with kerosene, and the lorry similarly. — *ka-ʃinn* /conj/ as if, as though. *bi-yitṣarraf ka-ʃinnu mudiir* he acts as if he were boss. *ʃikkarraʕ ka-ʃinnu waakil xaruuf* he belched as if he had eaten a sheep.

(ك ا ب)

كاب *kaab*[1] <Fr> /n pl *-aat*/ cape.

كاب *kaab*[2] <Engl> /n pl *-aat*/ (military) peaked cap.

ك ا د ر see ² ك د ر : *kaadir*

(ك ا ر)

كار *kaar* <P *kâr*> /n pl *-aat*/ occupation, trade. *ʃiḫna wilaad kaar waaḥid zayy' baʕḍ* we're all in the same trade together. *ʃirib ik-kaar min ṣuxr-u* ≈ he imbibed the trade with his mother's milk. ‖ *da-bn' kaar* (1) he's made for the job. (2) he's crafty.

كارة *kaara* /n pl *-aat*/ *[coarse slang]* arse.

ك ا ر ى

كارى *kaari* <Engl> /n/ curry.

ك ا ز ى

كازى *kaazi* <It *cazzo*> /n/ *[coarse slang]* penis, cock.

ك ا س

كاس *kaas* /n pl *-aat, kuʃuus*/ **1** wine-glass or any other stemmed glass. *kaas hawa* cupping glass. - *ʃil-moot kaas daayir ʕan-naas [prov]* ≈ death comes to all. - *ʕenee-ha zayy' kasaat id-damm* her eyes are very bloodshot. - *ya kaas-i* (women's mourning cry) ≈ oh woe is me! **2** glass of alcohol. *taʕaala nifrab kaas* let's go and have a drink. ‖ *ʃibn' kaas* bibber, boozer. **3** (also *kaʃs*) *[Chr]* chalice. **4** beaker (in a laboratory). — /pl *-aat*, only/ **5** *[mus]* wood block.

كاسة *kaasa* /n pl *-aat*/ **1** glass (for ice cream). **2** *[callig]* tail, flourish (e.g., of the letter *siin*).

(ك ا ش)

كاش *kaaf*[1] <Engl> /adv/ **1** with a single payment (as opposed to by instalments). *ʃiftiri kaaf - ʃarxaṣ* buy outright, it's cheaper. **2** in cash (as opposed to by cheque). *balaaf fikaat ʃana ʕaayiz kaaf* no cheques! I want (payment in) cash!

كاش *kaaf*[2] <Fr *cache*> /n pl *-aat*/ *[phot]* masking frame.

ك ا ف

كاف *kaaf* /fem n, pl *-aat*/ **1** twenty-second letter of the Arabic alphabet. **2** *[chem]* abbreviation for carbon *(karboon)*.

[1] ك ا ك

كاك *kaak* onomatopoeia for the call of the crow. *zayy' gamʕiyyit il-ɣirbaan ʃawwil-ha kaak wi-ʃaxir-ha kaak [prov]* like a group of crows, saying 'caw!' from first to last (said of those who indulge in fruitless talk).

ك ا ك ²
see ك ك ى : *kaaka, kaaka², kaaka³*

ك ا ك ا
كاكا *kaaka¹* (also *kakkaa*) <prob T *kaka* /n/ *[children]* excrement, cack. ‖*kida kakkaa - ma-tiɛmil-fⁱ kida* naughty, naughty - don't do that!

(ك ا ك ى)
كاكى *kaaki¹* <Engl> **1** /n/ **1a** khaki cloth. **1b** army uniform made of khaki cloth. **2** /adj invar/ dust-coloured, khaki-coloured.
كاكى *kaaki²* <perh It *cachi*> /coll n/ persimmon(s).

ك ا م ¹
كامة *kaama* <It *camma*> /n pl *-aat/ [mech]* cam.

ك ا م ²
see ك م : *kaam*

ك ا ن
كانة *kaana* <perh It *canna*> /n pl *-aat/ [constr]* **1** square metal spacer or frame to which longitudinal reinforcement rods are fastened within a concrete beam. **2** metal support sunk into a wall to support a wooden cornice, door- or window-frame.

ك ا ن ى
كانى *kaani: kaani w-maani* <Copt> one thing or another, as in *gineeh waaḥid madfuuɛ li-kaani w-maani* one pound which was paid for something or other. *ḥa-tɋul-li kaani w-maani* are you giving me a lot of excuses?

ك ء ب
كآبة *kaʃaaba* /n/ melancholy, depression, gloom.
كئيب *kaʃiib* /adj */ melancholy, depressed, gloomy. *loon kaʃiib* a cheerless colour.
اكتأب *ʃiktaʃab* /vi/ to become depressed. *ɛandu ʃiktiʃaab wi-ma-daxal-ʃ il-imtiḥaan* he's in a state of depression and didn't take the exam. - vn *ʃiktiʃaab*; ava *miktiʃib, muktaʃibˆ*.

ك ء س
see ك ا س : *kaʃs*

ك ء ن ن
see ك : *ka-ʃinn*

ك ب ب ¹
كبّ *kabb¹ (u)* /vt/ **1** to pour, pour out. *kubbi mayyit il-ɤasiil fil-ḥooɋ* pour the washing water into the sink. *ʃiz-zabbaal kabb iṣ-ṣafiiḥa fil-ɋuffa* the garbage man emptied the rubbish bin into the basket. **2** to spill, upset. **3** *[joc]* to throw to the ground. *ʃil-ḥuṣaan kabb-u* the horse threw him. — **4** /vi/ *[coarse slang]* to ejaculate, come. - vn *kabb, kababaan*; ava *kaabib*; pva *makbuub*.
كبّة *kabba¹* /n pl *-aat/* **1** instance noun of *kabb*. **2** *[mech]* standard feeding load.
مكبّة *mikabba¹* /n pl *-aat/* protective cover (for food).
اتكبّ *ʃitkabb* or *ʃikkabb* /vi/ **1** to be poured, be poured out. **2** to be spilled, be upset. **3** to become engrossed or absorbed. *mitkabb ᵃ ɛala ktaab-u* poring over his book. - ava/iva *mitkabb*.
انكبّ *ʃinkabb* = *ʃitkabb*. - ava/iva *minkabb*.

ك ب ب ²
كبّة *kubba¹* /n pl *kubab, kubbaat/* **1** lump. *ɛamalt il-ɛagiin kubba* I made the dough into a lump. **2** plague boil, bubo. ‖*gat-ak kubba* may plague befall you! (exclamation which may be accompanied by the holding up of a spread palm in front of someone's face). **3** clumsy person.
كباب *kabaab* /n/ shish kebab, pieces of meat, fish, or fowl skewered and grilled. ‖*kabaab ṣiini* cubeb.
كبابة *kabaaba: kabaaba ṣiini* cubeb.
كبابجى *kababgi* /n pl *-yya/* one engaged in the preparation, serving and selling of kebab.
كبيبة *kubeeba* /n/ dish composed of hollow balls of cracked wheat dough stuffed with minced lamb and spices.
كبابيّة *kubabiyya, kubbabiyya* /n pl *-aat/* ball (of string, wool etc.).
كبّب *kabbib* **1** /vt/ to make into a lump. *kabbibit il-mandiil wi-ḥaʈʈit-u f-geb-ha* she wadded the handkerchief into a ball and put it in her pocket. **2** to pile up, throw in a pile. *ʃinta bassⁱ tkabbib-li l-ɤasiil fir-rukn* just pile the laundry in the corner for me. — /vi/ **3** to thrust one's open palm in someone's face (a gesture of imprecation, cf. *kubba¹* 2). *raaḥu mkabbibin-lu f-wiff-u* they thrust their palms at his face, as if to say 'May plague befall you!'. - vn *takbiib*; ava/pva *mikabbib*.
تكبيبة *takbiiba* **1** /unit n, pl *-aat, takabiib/* a lump. **2** /inst n, pl *-aat/* gesture of holding up the palm, claw-like, before someone's face.
مكبّب *mikabbib* /adj */ round, rounded, spherical. *naḥla mkabbiba* a spherical spinning top. *sidr-a-ha mkabbib* her bosom is full and firm. *geeb-u mkabbib* his pocket is bulging.
اتكبّب *ʃitkabbib* or *ʃikkabbib* /vi/ **1** passive of *kabbib*. **2** to pile up. *naas mikkabbiba ɛal-maḥall* people crowding round (the door of) the shop. - ava/iva *mitkabbib*.

ك ب ب [3]
كَبّ *kabb*[2] *(u)* /vi/ to use a cupping bowl (as a medical treatment). *ḥ-akubb*[a] *ɛala ḍahr-i* I'll have my back cupped. - vn *kibaaba*; ava *kaabib*.
كبّاية *kubbaaya* /n pl *-aat*/ **1** drinking glass, tumbler. *kubbaayit mayya* a glass of water. ‖ *ʕibn' kubbaaya* bibber, boozer. - *ḍarbit kubbaaya* blow with the side of the fist (in boxing). - *naḍḍaraat ɋaɛr' kubbaaya [joc]* thick eyeglasses. **2** tub, small carton. *kubbaayit jilaati* a tub of ice cream. **3** socket, sunken recess. *kubbaayit ṣaari* step of a mast.
مكبّة *mikabba*[2] /n pl *-aat*/ cupping bowl.
مكبّاتى *mikabbaati* /n pl *-yya*/ *[obsol]* practitioner of a treatment (usually for rheumatism) involving the use of suction bowls.

(ك ب ب) [4]
كبّة *kabba*[2] /n/ **1** five-stones, jacks. - also *gabba*. **2** gambling game with cards.
كبّة *kubba*[2] <It *coppe*> /n/ (suit of) hearts (in cards).

ك ب ب ا د
كبّاد *kabbaad* /coll n/ sour orange(s), Seville orange(s).

ك ب ب ج ى see ك ب ب [2]: *kababgi*

ك ب ب ن ى
كبّنيّة *kubbaniyya* <It *compagnia*> /n pl *-aat*/ **1** gang, group. **2** *[obsol]* (water or electricity) utility.

ك ب ب و د
كبّود *kabbuud* (also *kabbuut*) <Fr *capote*> /n pl *kababiid*/ **1** *[auto]* **1a** hood or bonnet (of the engine). **1b** convertible top. **2a** hood of a coat. **2b** car cover. **3** /usually *kabbuut*/ condom.

ك ب ت [1]
كبت *kabat (i)* /vt/ to suppress, repress. *kabt il-ḥurriyya* the suppression of freedom. *nifs-u yṭallaɛ ṭaqṭ-u l-makbuuta* he wants to find an outlet for his suppressed energy. - vn *kabataan, kabt*; ava *kaabit*; pva *makbuut*.
كبت *kabt* /n/ repression. *ʕik-kabt ig-ginsi* sexual frustration.
كبتة *kabta* /pl *-aat*/ instance noun of *kabt*.
اتكبت *ʕitkabat* or *ʕikkabat* /vi/ to be suppressed, be repressed. - iva *mitkibit*.
انكبت *ʕinkabat* = *ʕitkabat*. - iva *minkibit*.

ك ب ت [2] see ك ب ب و د: *kabbuut*

ك ب ت ن
كابتن *kabtin* <Engl> /n pl *kabaatin*/ **1** captain (of a ship or aircraft). *ʕil-kabtin bitaaɛ il-markib* the ship's captain. **2a** sports coach. **2b** captain (of a games team). **2c** polite form of address to an athlete. **2d** form of address or reference to a young man (sometimes used ironically).
اتكبتن *ʕitkabtin* or *ʕikkabtin* /vi/ to be bossy. *ḥa-titkabtin ɛaleena* are you going to throw your weight around with us? - vn *kabtana*; ava *mitkabtin*.

ك ب ت ن –
كابيتونيه *kabituneeh* <Fr *capitonné*> /n/ quilt-stitching. *ɋumaaf kabituneeh* quilted material.

ك ب د [1]
كبد *kabad (i)* /vt/ to cause distress to. - vn *kabd*; ava *kaabid*; pva *makbuud*.
كبد *kibd* /n/ liver. *zeet kibd il-ḥuut* cod-liver oil. ‖ *ɛandu k-kibd* he has liver trouble. - *ya kibd-i ɛalee(k) [women in trad soc]* ≈ (you) poor little thing! (expression of concern). - *ʕibn-ak ḥitta min kibd-ak* ≈ your son is your own flesh and blood (so treat him accordingly).
كبدة *kibda* /n pl *kibad*/ liver (as food). ‖ *zayy il-kibda* very red.
اتكبد *ʕitkabad* or *ʕikkabad* /vi/ to be caused distress. - iva *mitkibid*.
انكبد *ʕinkabad* = *ʕitkabad*. - iva *minkibid*.
كبّد *kabbid, kabbad↑* /vt/ to inflict (losses, damage) on. - vn *takbiid*; ava *mikabbid*; pva *mukabbad↑*.
اتكبّد *ʕitkabbid* or *ʕikkabbid* /vi/ passive of *kabbid*. - iva *mitkabbid*.

ك ب د [2] see ك ب ب ا د: *kabbaad*

ك ب د [3] see ك ب ب و د: *kabbuud*

ك ب ر
كبر *kibir, kubur (a)* /vi/ **1** to increase in size, increase in dimension. *ʕil-waram kibir* the swelling has increased. *kul ɛafaan tikbar* eat so you'll grow! *ʕin-naas iddaxxalit wil-xinaaɋa kibrit* people interfered and the dispute grew. **2a** to increase in age. *ʕana kbirt' xalaṣ wi-ma-baɋit-ʃ' ʕaɋdar ʕaftaɣal ʃuul in-nahaar* I'm past it now and can no longer work the whole day. *kull' ma yikbaru ylaaɋu d-dinya ɋasya* the older they get the more they find that the world is cruel. **2b** to reach maturity. *ʕil-bint iṣ-ṣuɣayyara lamma tikbar tiɛɋal* when a little girl grows up she becomes sensible. *lamma*

l-quṭn' yikbar yiṭallaʕ nawwaar when the cotton reaches maturity it puts out blossom. - vn *kubr, kabar, kibar*; ava *kabraan*.

كبر *kubr* /n/ **1** largeness, immensity. *fuuf kubr-u* see how big it is! ‖ *kubr il-gurn' wala ʃamaatit il-ʔaʕaadi [prov]* ≈ putting up a show is better than being the object of gloating. **2** advancement (in age).

كبر *kabar, kibar* /n/ advanced point in age. *raaḥ il-madrasa ʕala kabar* he went to school late in life.

كبرة *kabra* /n/ advanced point in age. *baʕd ik-kabra gibba ḥamra [prov]* (a red *gibba* in very old age) extreme senility brings second childhood.

كبير *kibiir, kabiir↑* /adj pl *kubaar, kibaar↑*/ **1** big, large. *ʕilbiteen kubaar* two big boxes. *mudda kbiira* a considerable period. *ʕamal ɣalaṭ kibiir* he made a big mistake. *ʕadad kibiir min banaat il-ʔayyaam di* a great number of today's girls. ‖ *ʕalb-u kbiir* he's big-hearted. - *muxx-u kbiir* (1) he's clever. (2) he's broad-minded. **2a** advanced or senior in age. *ʔaxuu l-kibiir* his elder/eldest brother. *ʔis-sitt ik-kibiira* designation for the eldest female member of a household (usually the grandmother). **2b** adult, full-grown. *ʔil-kubaar laazim yiʕuumu badri yṣallu* the adults should get up early to pray. *yiʕmiluu-ha ṣ-ṣuɣaar wi-yuʕaʕu fiiha l-kubaar [prov]* the young start them (i.e. fights among themselves) but the adults (i.e. the parents) get dragged into them. **3** senior, superior (in rank). *kibaar iẓ-ẓubbaaṭ* senior officers. ‖ *kibiir il-beet* head of the household. - *kabiir il-muhandisiin [naut]* chief engineer. **4** outstanding, eminent. *kuttaab kubaar* great writers. *ʔik-koora ma-lha-ʃ kibiir* nobody is invincible in soccer. ‖ *kabiir ʔumaraaʔ l-biḥaar [obsol]* Admiral of the Fleet. — /n/ **5** *[rur]* large horizontal cog of a water-wheel (see Pl.E, 7).

كبيرة *kibiira* /n pl *kabaayir*/ major sin. *marist iz-zina - kibiira min il-kabaayir* I committed adultery - one of the greatest sins.

أكبر *ʔakbar* /el/ **1** larger/largest. **2** older/oldest, etc. *huwwa ʔakbar minni b-sana* he's a year older than I. **3** greater/greatest. ‖ *ʔallaahu ʔakbar* God is most great.

أكابر *ʔakaabir* /pl n/ people of high standing, people of distinction. *bint il-ʔakaabir ɣalya wa-law tikuun garya [prov]* (the daughter of the great has quality even if she is a serving-girl) true worth can never be lost.

كبرى *kubra'↑* /fem el/ **1** greater. *ʔil-qaahira l-kubra* Greater Cairo. **2** major. *ʔid-duwal il-kubra* the major powers.

كبرياء *kibriyaaʔ* /n/ pride, haughtiness. ‖ *ʔil-kibriyaaʔ li-llaah* ≈ what have you to be conceited about?

كبّارة *kubbaara* /adj invar/ **1** socially distinguished. *raagil kubbaara* a man of standing. **2** old.

كبّر *kabbar* /vt/ **1a** to enlarge, expand. *ʕayziin nikabbar ṣuwar il-faraḥ* we want to enlarge the wedding pictures. *ʔil-ʕadasa bi-tkabbar iṣ-ṣuwar* the lens magnifies the images. *naḍḍaara mkabbara* binoculars. *ʔimʃi min hina w-ma-tkabbar-ʃ il-ḥikaaya* get out of here and don't make things worse! ‖ *kabbar ʕaql-ak* be reasonable! **1b** to enhance, raise (the level of). *ʔil-hurn' ykabbar iṣ-ṣoot* the bell (of the trumpet) amplifies the sound. ‖ *ʕaaʕid min iṣ-ṣubḥ' ykabbar maʕam-ha* (or *min maʕam-ha*) he's been praising her all day. **1c** to cause to grow or increase in size. *bi-ykabbaru fraax ʕaʃaan yibiʕuu-hum* they fatten up chickens to sell. **2** to cause to mature, bring up. *rabbeet ʔawlaad-i w-kabbart-u-hum wi-daxxalt-u-hum il-gamʕa* I raised my children and sent them to the university. **3** to give the appearance of age. *ʔil-fustaan da bi-ykabbar-ha* that dress makes her look older. *bi-tiʃrab sagaayir ʕaʃaan tikabbar nafs-a-ha* (or *fi-nafs-a-ha*) she smokes cigarettes to seem older. **4** to seek a large(r) size of. *kabbari k-kubbayaat illi ʕaṭ-ṭarabeeza* put bigger glasses out on the table. — /vi/ **5** to utter the formula *ʔallaahu ʔakbar*. - vn *takbiir*; ava/pva *mikabbar*.

تكبيرة *takbiira, takbiira* /inst n, pl *-aat, -aat*/ (single) utterance of *ʔallaahu ʔakbar*.

مكبّر *mukabbir↑* /n pl *-aat*/ **1** loudspeaker, amplifier. **2** *[phot]* enlarger.

مكبّرة *mukabbira* /n pl *-aat*/ magnifying glass.

اتكبّر *ʔitkabbar* or *ʔikkabbar* /vi/ **1** passive of *kabbar*. **2** to be disdainful or haughty. *yitkabbaru leeh ʕalee* why should they look down on him? - iva *mitkabbar, mutakabbir*.

متكبّر *mutakabbir, mitkabbar* /adj */ conceited, stuck up.

كابر *kaabir* /vi/ to argue back (out of unwillingness to listen to the other's point of view). *ʔismaʕ kalaam-i balaaʃ mikabra* listen to what I say, don't be so opinionated. - vn *mikabra, mukabra*; ava *mikaabir*.

استكبر *ʔistakbar* /vt/ **1** to consider (excessively) large or old. **2** to select for size or age. — /vt and vi/ **3** to give (oneself) airs, feel superior. *bi-yistakbar ʕaleehum* he looks down on them. *mistakbara nafs-a-ha ʕaʃ-ʃuɣlaa-di* she thinks that job is beneath her dignity. - vn *ʔistikbaar*; ava *mistakbar*.

ك ب ر ا

كوبرا *kubra²* (also *tiʕbaan kubra*) /n/ cobra.

ك ب ر ت ¹

كبرت *kabrit* /vt/ to sulphurate. - vn *kabrata*; ava/iva *mikabrit*.

كبريت *kabriit* /n/ **1** sulphur. *kabriit in-naḥaas* copper sulphate. ‖*kabriit il-ɛamuud* raw sulphur. **2** /coll/ matches. *kabriit miſṭ* book matches.
كبريتة *kabriita* /inst n, pl *-aat, kabariit*/ a match. *ɛandak kabriita* got a light?
كبريتات *kabritaat* /n/ sulphate.
كبريتيد *kabritiid* /n/ *[chem]* sulphide. *kabritiid il-ſidrujiin* hydrogen sulphide.
كبريتيك *kabritiik: ḥaamiḍ kabritiik [chem]* sulphuric acid.
اتكبرت *ſitkabrit* or *ſikkabrit* /vi/ to be sulphurated. - iva *mitkabrit*.

ك ب ر ت ²

كوبرتة *kubirta* <It *coperta*> /n pl *-aat*/ coverlet for a bed, bedspread. - also *kufirta*.

ك ب ر ى

كوبرى *kubri* <T *köprü*> /n pl *kabaari*/ **1** bridge. **2** *[dent]* bridge. **3** thwart (of a Nile boat).
¶ *ɛamal kubri* (1) to allow the ball to pass between one's legs (in soccer). (2) to arch the back in order to avoid a shoulder penalty (in wrestling).

ك ب ر ى ا

كبوريا *kaburya* <perh Gr *kabouras*> /coll n/ crab(s).
كبوريایة *kaburyaaya* /unit n, pl *-aat*/ a crab.

ك ب ر ى ه

كبريه *kabareeh* <Fr *cabaret*> /n pl *-aat*/ night-club.

ك ب س

كبس *kabas (i)* /vt/ **1** to compress, press down, pack tightly. *bi-nikbis il-quṭni' fil-ſakyaas* we pack the cotton down in the sacks. **2** to frustrate or embarrass by proving wrong. *kabas-ni w-nigiḥ* to my embarrassment, and contrary to my expectation, he succeeded. **3** to fend off (one's opponent, in wrestling). **4** *[magic]* to jinx into sterility. **5** to press down on. *ſikbis ig-garḥ' b-bunn* press ground coffee on the wound (to stop it from bleeding). **6** *[coarse]* to copulate with, stuff. – /vi/ **7** to exert pressure. *baṭn-i kabsa ɛalayya* I feel bloated. **8a** to converge, close in. *buṣṣ' ɋabl iz-zaḥma ma tikbis* take a look before the crowd closes in. ‖*ſin-noom kaabis ɛaleeha* sleep is overcoming her. **8b** to raid. *ſil-buliṣ kabas ɛal-ɤurza* the police raided the hashish den. - vn *kabasaan, kabs*; ava *kaabis*; pva *makbuus*.
كبس *kabs* /vn/ ‖*ɛagala kabs* a solid tyre. - *ḥaſiiſ kabs* poor grade of hashish.
كبسة *kabsa* /n pl *-aat*/ **1** instance noun of *kabs*. ‖*kabsa [joc]* there! got you! (when proving that someone is wrong). **2** pressing, any item pressed by machine, particularly in the record industry or in metal-work. **3** surprise search, raid (usually for contraband).
كبس *kubs* /n pl *ſikbaas*/ *[elec]* plug.
كبّاس *kabbaas* /n pl *-aat*/ plunger, piston. ‖*ſid-dunya funya wiz-zaman kabbaas [prov]* ≈ time waits for no man. - *ḥagar il-kabbaas* stone rubbed against mother-of-pearl in folk medicine, for the treatment of women in confinement and those with purulent ophthalmia.
كابوس *kabuus* /n pl *kawabiis*/ nightmare.
كبيس *kabiis* /adj/ pressed, compressed. *balaḥ kabiis* pressed dates. ‖*sana kabiisa* leap year.
مكبس *makbas* /n pl *makaabis*/ **1** pressing machine, press. **2** piston, plunger.
اتكبس *ſitkabas* or *ſikkabas* /vi/ passive of *kabas*. - iva *mitkibis*.
انكبس *ſinkabas* = *ſitkabas*. - iva *minkibis*.
كبّس *kabbis* /vt/ **1** to pack down, press down. *kabbisit id-diɋiiɋ fiṣ-ṣafaayiḥ* she packed the flour down in the tins. **2** to massage. *kabbis ḍahr-i* give me a back-rub! **3** to mate with (of fowl). - vn *takbiis*; ava/pva *mikabbis*.
مكبّساتى *mikabbisaati* /n pl *-yya*/ *[trad soc]* masseur (in a Turkish bath).
اتكبّس *ſitkabbis* or *ſikkabbis* /vi/ passive of *kabbis*. - iva *mitkabbis*.

ك ب س ت

كوبستة *kubista* <T *küpeşte* from Gr> /n pl *-aat*/ (wooden) handrail. - also *kubiſta*.

ك ب س و ل

كبسول *kabsuul* <Fr> /coll n/ capsule(s).
كبسولة *kabsuula* /inst n, pl *-aat, kabasiil*/ a capsule.

ك ب س و ن

كبسون *kabsuun* <poss Fr *capsule*> /coll n/ **1** snap fastener(s), press stud(s). **2** eyelet(s). **3** cap(s) (for toy guns).
كبسونة *kabsuuna* /unit n, pl *-aat, kabasiin*/ **1** a snap fastener, a press stud. **2** an eyelet. **3** a cap.

ك ب ش ¹

كبش *kabaf (i)* /vt/ **1** to take a handful of. *kabaf milabbis wi-ddaa-ni* he took a handful of sugar-coated almonds and gave them to me. **2** to clutch, clutch at. *b-aḥiss' f-baṭn-i zayy' ma tkuun ḥaaga kabfaa-ha* I feel as if something were clutching at my stomach. - vn *kabafaan, kabf*; ava *kaabif*; pva *makbuuf*.

كبشة *kabʃa* /n pl *-aat, kubaʃ/* **1** handful. *ḥuṭṭ[i] kabʃit ṣabuun mabʃuur fi-mayyit il-ɣasiil* put a handful of soap flakes in the washing water. ‖*ʕandu kabʃit ʕiyaal* he has a bunch of children. **2** ladle. *ʔilli ʔiddaa-hum bik-kabʃa yiddii-na bik-kustibaan [prov]* may He who gave them by the ladle(ful) give to us by the thimble(ful) (said of one who has been fortunate).
اتكبش *ʔitkabaʃ* or *ʔikkabaʃ* /vi/ passive of *kabaʃ*. - iva *mitkibiʃ*.
كبّش *kabbiʃ* /vi/ **1** to take successive handfuls. *ʕali baaba daxal il-maɣaara wi-kabbiʃ fil-filuus* Ali Baba entered the cave and grabbed the money in handfuls. *niḥuṭṭ is-simaad bit-takbiiʃ* we put down the fertilizer by handfuls. **2** to cling. *mikabbiʃ fil-ʔarḍ* clinging to the ground. - vn *takbiiʃ*; ava *mikabbiʃ*.

[2] ك ب ش
كبش *kabʃ* /n pl *kibaaʃ, ʔakbaaʃ*/ (stud) ram. ‖*kabʃ[i] fida* scapegoat.
كبشة *kubʃa* <T *kopça*> /n pl *kubaʃ*/ hook and eye.

ك ب ش ت
كوبشتة *kubiʃta* <T *küpeşte* from Gr> /n pl *-aat*/ (wooden) handrail. - also *kubišta*.

ك ب ك see **ك ب و ك**: *kabuuk*

ك ب ك ب
كبكب *kabkib* /vt/ to spill repeatedly. - vn *kabkaba*; ava/pva *mikabkib*.
اتكبكب *ʔitkabkib* or *ʔikkabkib* /vi/ passive of *kabkib*. - vn *tikabkiib*; iva *mitkabkib*.

[1] ك ب ل
كابل *kabl* <Fr> /n pl *-aat, kawaabil, kababiil*↓, *kawabiil*/ (electric) cable.

[2] ك ب ل see **ك ب و ل ى**: *kabuuli*

ك ب ل ى ه
كوبليه *kubleeh* <Fr *couplet*> /n pl *-aat*/ verse of a song or poem.

[1] ك ب ن see **ك ب ب ن ى**: *kubbaniyya*

[2] ك ب ن see **ك ب و ن**: *kubuun, kubuuna*

[3] ك ب ن see **ك ب ى ن**: *kabiina*

ك ب ن ى ه
كبنيه *kabineeh* <Fr *cabinet*> /n pl *-aat*/ lavatory, toilet. *kabineeh ʃafrangi* pedestal lavatory upon which one sits. *kabineeh baladi* lavatory with foot pedestals over which one squats. ‖*ʕamal kabineeh* and *raaḥ il-kabineeh* he used the lavatory, he went to the bathroom.

ك ب و ك
كبوك *kabuuk* /n/ kapok, Java cotton.

ك ب و ل ى
كابولى *kabuuli* <poss It *capolo*> /n pl *kawabiil*/ **1** prop. **2** cantilever, bracket, corbel.

ك ب و ن
كبون *kuboon, kubuun* <Fr *coupon*> /n pl *-aat*/ **1** coupon. **2** *[finan]* dividend certificate.
كبونة *kuboona, kubuuna = kuboon*.

[1] ك ب ى
كبى *kaba (i)* /vi/ **1** to become dull (of colours). **2** to become dim (of light). - ava *kaabi*.
كابى *kaabi* /adj */ **1** dull, matt (of colours). *ʔabyaḍ kaabi* off-white, whitish. **2** lustreless, tarnished (of metal surfaces). **3** greyish, ashen (of complexion).

[2] ك ب ى
كوبيا *kubya* <It *copia*> /n/ (carbon or xerox) copy. *ɋalam kubya* copying pencil, indelible pencil. ‖*ʃaay kubya [deris]* extra strong tea. - *leela* (or *yoom) kubya* one hell of an evening (or day), as in *lelt-ik ḥa-tibɋa kubya* you're in for a very tough evening!

ك ب ى ن
كابينة *kabiina* <It *cabina*> /n pl *kabaayin*/ **1** cabin. *kabiina ʃamsiyya* beach tent. **2** compartment (in a train). **3** caterer's hamper of crockery.

ك ت ا و ت
كتاوت *kataawit* <Engl *cut-out*> *[auto]* voltage regulator.

ك ت ب
كتب *katab (i)* /vt/ **1** to write. *miin katab il-muzakkira di* who wrote this memo? *ʔid-duktoor katab-li rufitta* the doctor wrote me a prescription. *ʔil-kitaaba ɋal-makana* typing. ‖*katab kitaab-u ɋal-bint [Isl]* he made the contract to marry the girl. - *katabuu-li ḥittit ʔarḍ* they made a piece of land over to me, they wrote a piece of land in my name. **2** to foreordain, destine (of God). - vn *kitaaba, katb, katabaan*; ava *kaatib*; pva *maktuub*.

كتابة *kitaaba* /n pl *-aat/* **1** writing, piece of writing. ‖*niʕmil ʤurʕa - malik walla ktaaba* let's spin a coin - heads or tails? **2** inscription. **3** /no pl/ writing system, script.

كاتب *kaatib*[1] **1** /ava/ ‖*ʃaala katba* typewriter. *ḥ-atʕallim ʃaala katba* I shall learn to type. — /n/ **2** /pl *kuttaab, kataba*/ secretary, clerk. *baʃkaatib* chief clerk. *kaatib il-maḥkama* clerk of the court. *ʤalam ik-kuttaab* secretarial pool. **3** /pl *kuttaab, katbiin*/ writer, author. *kaatib bil-ḥitta* a freelance writer.

مكتوب *maktuub* /adj/ predestined. *ʃilli maktuub ʕal-gibiin laazim tifuuf-u l-ʕeen [prov]* ≈ what will be will be.

كتاب *kitaab* /n/ **1** /pl *kutub*/ book. *ʃil-kitaab il-muqaddas* the Bible. *kitaab illaah* the Koran. ‖*wi-kitaab illaah* oath to enjoin belief in the speaker's words, as in *wi-kitaab illaah il-wiliyya di naḥasit-ni* this woman has really jinxed me! **2** /no pl/ marriage contract.

كتابي *kitaabi* /adj/ **1** written. *ʃamr' ktaabi* an order in writing. **2** clerical. *ʃik-kadr' ik-kitaabi* the clerical grade (as an entire group).

¶ *kitabiyyan*↑ /adv/ in writing. *bi-yʤaddim ir-raʃy il-qanuuni kitabiyyan* he presents the legal view in writing.

كتبجي *kutubgı* /n pl *-yya*/ book dealer.

كتبي *kutbi* /n pl *kutbiyya*/ book dealer.

الكتبخانة *ʃik-kutubxaana* /prop n/ *[obsol]* the Egyptian National Library.

كتيبة *katiiba* /n pl *kataayib, kataaʃib*↑/ *[mil]* grouping corresponding roughly to a battalion. ‖*ḥizb il-kataayib* (or *il-kataaʃib*) the Phalangist Party (in Lebanon).

كتّاب *kuttaab* /n pl *katatiib*/ traditional school in which the Koran is taught. ‖*lamma ʃaab wadduu ik-kuttaab [prov]* after he had become an old man, they sent him to elementary school (said in respect of an action taken after its proper time).

مكتب *maktab* /n pl *makaatib*/ **1** office, bureau. *maktab fanni* a technical bureau. **2** desk. *ḥ-aquum min ʕala maktab-i* I'll get up from my desk. **3** (also *ʃooḍit maktab*) study.

مكتبة *maktaba* /n pl *-aat*/ **1** bookshop. **2** library. **3** stationery shop. **4** bookcase.

مكتبي *maktabi* /adj */ **1** pertaining to an office. *ʕamal maktabi* office work. *ʃadawaat maktabiyya* office supplies. **2** pertaining to a library. *tanẓiim maktabi* library science.

مكتبجي *maktabgi* /n pl *-yya*/ *[obsol]* book dealer.

اتكتب *ʃitkatab* or *ʃikkatab* **1** to be written. **2** to be foreordained, be destined. ‖*ʃikkatab-lu ʕumr' gdiid* he had a new lease of life. - iva *mitkitib*.

انكتب *ʃinkatab* = *ʃitkatab*. - iva *minkıtib*.

كتّب *kattib* /vt/ to cause to write, make write. *kattib-ha gawaab* he made her write a letter. - ava *mikattib*.

اتكتّب *ʃitkattib* or *ʃikkattib* /vi/ passive of *kattib*. - iva *mitkattib*.

كاتب *kaatib*[2] /vt/ to write to, correspond with. *la bi-ykatib-ni wala b-akatb-u* he doesn't write to me and I don't write to him. - vn *mikatba, mukatba*; ava *mikaatib*.

مكاتب *mukaatib* /n */ correspondent (of a newspaper etc.).

مكاتبة *mukatba* /n pl *-aat*/ item of (written) correspondence. *yisallim il-mukatbaat il-xaṣṣa bil-qaḍiyya* he delivers correspondence particular to the case. *mukatbaat rasmiyya* official correspondence.

اتكاتب *ʃıtkaatıb* /vi/ to write to one another, carry on a correspondence. - ava *mitkaatib*.

اكتتب *ʃiktatab* /vi/ to subscribe, pay a contribution. *ʃiktatabu fil-mafruuʕ il-xayri* they subscribed to the charity project. - vn *ʃiktitaab*; ava *miktitib*.

استكتب *ʃistaktib* /vt/ to force (s.o.) to write. *ʃistaktibuu-ni ʃiqraar* they forced me to write a confession. - vn *ʃistiktaab*; ava/pva *mistaktib*.

ك ت ت [1]

كتّ *katt*[1] *(u)* /vt/ *[rur]* to chop, mash (food for chicks). *kattit il-barsiim lik-katakiit* she chopped up the clover for the chicks. - vn *katt, katataan*; ava *kaatit*; pva *maktuut*.

كتّ *kutt* /onom/: *kutt' kutt' kutt'* ... sound made to call chicks. see further under **ك ت ك ت [1]**

اتكتّ *ʃitkatt* or *ʃikkatt* /vi/ passive of *katt*[1]. - iva *mitkatt*.

انكتّ *ʃinkatt* = *ʃıtkatt*. - iva *minkatt*.

كتّت *kattit*[1] = *katt*[1]. - ava/pva *mikattit*.

اتكتّت *ʃitkattıt*[1] or *ʃikkattit*[1] /vi/ passive of *kattit*[1]. - iva *mitkattit*.

ك ت ت [2]

كتّ *katt*[2] *(u)* /vt/ **1** to throw out, *kutt-u barra* throw him out! **2** to secrete, ooze. *wiff-u katt" ʕaraq* his face was dripping with sweat. — /vi/ **3** *[slang]* to make off. *kutt' ya waad* buzz off, kid! *katt' min is-sign* he escaped from prison. - vn *katataan*; ava *kaatit*; pva *maktuut*.

كتّيت *kutteet* /n pl *kutteeta*/ *[mil slang]* one who frequently goes absent without leave.

كتّت *kattit*[2] /vt/ to send off, shoo away. *ʃaxiiran kattitna l-waad* finally we chased the kid away. - ava/pva *mikattit*.

اتكتّت ʔitkattit[2] or ʔikkattit[2] /vi/ to be sent off, be shooed away. - iva *mitkattit*.

ك ت ت[3]

كتّت *kattit*[3] /vt/ to tangle, snarl. - vn *taktiit*; ava/pva *mikattit*.

مكتّت *mikattit* /adj/ **1** tangled, snarled. **2** kinky, frizzy (of hair).

اتكتّت ʔitkattit[3] or ʔikkattit[3] /vi/ to be tangled, be snarled. - iva *mitkattit*.

ك ت ت[4] see ك ط ط

ك ت ر

كتر، كتر *kitir, kutur (a)* /vi/ **1** to become numerous, proliferate. *kitrit il-ɛaṣafiir min xamsiin sana* sparrows have become numerous over the last fifty years. *lamma ṭ-ṭalq' yiktar wi-yiigi wara baɛḍ* when the labour contractions increase and come in (quick) succession. **2** to become widespread, become extensive. *ʔil-faqr' kitir fil-balad* poverty has become widespread in the country. **3** to increase in intensity, be or become compounded, become more so. *kitir zaɛal-u* he got more upset. - vn *kutr, kutra*.

كتر، كتر *kutr* /n/ **1** great deal, large amount. *min kutr-u yɛallaquu fi-ḥbaal* there's so much of it they hang it on ropes. **2** overabundance. *kutr il-makwa bi-ywaqqaɛ if-faɛr* too much use of curling tongs makes the hair fall out. *kutr il-ḥuzn' yɛallim il-buka [prov]* too much grief teaches one to weep.

¶ *min kutr' ma* because of the (great) extent to which. *bi-tilḥas ṣawabiɛ-ha baɛḍ il-ʔakl' min kutr' ma hiyya mabsuuṭa* she licks her fingers after eating, so delighted is she.

كترة، كرة *katra, kutra, kasra'* /n/ (large) quantity, abundance. *ʔil-katra tiṿlib if-ʃagaaɛa [prov]* numbers overwhelm courage. *bi-katra* (1) in abundance. *bi-yifrab bi-kutra* he drinks a lot. (2) often. *bi-yustaɛmal bi-kasra* it is often used.

كتير، كتير *kitiir* **1** /adj pl *kutaar*/ many, numerous. *banaat kitiira* (or *kitiir*) many girls. *ɛiyaal kitiir* (or *kutaar*) many children. *ʔin-naas kutaar ɢawi* there are a great many people. *ʔanwaaɛ is-sibaaḥa ktiir* there are many styles of swimming. ‖*ʃiwayya ktaar* (1) a good few, a good many. (2) a good while. **2** /n/ great deal, great number. *kitiir min in-naas mif laqyiin sakan* a great number of people can't find housing. *niɛiif bil-ɢaliil lamma ygii-na l-kitiir* we live on little until we have plenty. *ʔaḥsan bi-ktiir* better by a long shot, much better. ‖*la bi-ktiir wala b-ɢaliil* not for anything. - *faat il-kitiir ma-baqa ʔilla l-ɢaliil* ≈ the worst is over. - *bik-kitiir* at most, as in *ḥa-nṿiib nuṣṣ' saaɛa bik-kitiir* we'll be gone half an hour at the most. **3** /adv/ **3a** much, a lot. *ɛayza tnaam kitiir* she needs to sleep a lot. **3b** often. *kitiir lamma niftaḥ il-balaḥ nilaaqi ḥafaraat* often, when we open up dates, we find insects. *kitiir law farraṿna toob nilaaqi ʔaxr-u mkarmif* often, if we unravel a bolt (of cloth), we find that the end piece of it is crumpled.

أكثر، أكثر *ʔaktar* /el/ more, most. *(ʔinta) ɛaawiz ʔaktar min kida* (1) do you want more than this? (2) what more could you ask for! *mif ḥa-nuqɛud ʔaktar min nuṣṣ' saaɛa* we won't stay more than half an hour. *ʔaktar waqt' mumkin* the longest possible time. *ʔalam yidawwax-u ʔaktar ma huwwa daayix* a pain which makes him even more dizzy. *ɛawz-u yfuf-li faqqa bukra ʔaw baɛḍ' bukra ɢala l-ʔaktar* I want him to find me an apartment tomorrow or the next day at the latest. - /adverbially/ *ʔik-kuḥḥa b-tiigi ʔaktar bil-leel* the cough comes more frequently at night.

أكثريّة، أكثريّة *ʔaktariyya, ʔaktariyya* /n/ majority. *ʔaktariyyit in-naas* most people. ‖*bil-ʔaktariyya* at most.

كتيرا، كتيرا *kitiira* /n/ *[bot]* tragacanth.

كتّر، كتّر *kattar* /vt/ **1** to increase in number or quantity. *ḥa-ykattar min id-dibiiḥ* he'll get a lot of meat together. *ma-tkattar-lahaa-f il-mayya* don't add much water to it. ‖*kattar (ʔalf') xeer-ak* (may God increase your bounty) ≈ thank you very much. — /vi/ **2** to go too far. *laqeet-u ḥa-ykattar fa-qult' balaaf xinaaq* I saw he was going to turn abusive so I decided to stop quarrelling. ‖*mif ḥ-akattar ɢaleek* I'll make it short, I won't take too much of your time. **3** to seek a large quantity. *ʔil-balaaf kattar minnu [prov]* make the most of what is free. **4** to become broody (of a hen etc.). - vn *taktiir*; ava *mikattar*.

اتكتّر *ʔitkattar* or *ʔikkattar* /vi/ to be increased in number or quantity. - iva *mitkattar*.

اتكاتر، تكاتر *ʔitkaatir* or *ʔikkaatir* /vi/ **1** to be numerous, be many. *ʔitkatru ɢalayya* they outnumbered me. **2** to multiply, increase in number. - ava *mitkaatir*.

استكتر، استكتر *ʔistaktar* /vt/ **1** to consider (too) much. **2** to seek or provide in quantity. - vn *ʔistiktaar*; ava *mistaktar*.

ك ت ر ك ت

كتراكتا *katarakta* /n/ *[path]* cataract.

(ك ت ش)

كتش *katf* <Engl and Fr>: *muṣarɛit katf* catch-as-

catch-can style of wrestling.
كوتش *kutf* <Engl> /n pl *-aat*/ (sports') coach.

ك ت ش ى ن
كوتشينة *kutfiina* <perh It *giochina* a little game> /n/ **1** /coll n/ playing-cards. **2** /pl *katafiin*/ deck of cards.

ك ت ع
كتع *kataɛ* /n/ deformity of the arm.
أكتع ʃaktaɛ /adj, fem *katɛa*, pl *kutɛ*/ having a deformed arm.
كتّع *kattaɛ* /vt/ to leave (s.o.) with a crippled arm. ‖*xaṭṭaaṭ mikattaɛ* a grossly inept calligrapher. - vn *taktiiɛ*; ava/pva *mikattaɛ*.
اتكتّع ʃitkattaɛ or ʃikkattaɛ /vi/ passive of *kattaɛ*. - iva *mitkattaɛ*.

ك ت ف
كتف *kitf* /n pl *kitaaf, ʃaktaaf, kutuuf*/ **1a** shoulder. *faalit il-bint*ᵃ *ɛala kitf-a-ha* she carried the girl on her shoulder. *faal il-masʃuliyya ɛala ktaaf-u* he shouldered the responsibility. ‖ *ʃil-haziima bil-kitf* (in wrestling) defeat of the opponent by pinning both his shoulders to the ground. - *warrii-ni ɛarḍ' ktaaf-ak* let me see the back of you! - *ʃiid-i ɛala kitf-ak* ≈ I'm with you all the way! - *ʃibn-u ɛala kitf-u w-huwwa daayir yidawwar ɛalee [prov]* ≈ he can't see what is under his nose. **1b** *[soccer]* shoulder push. **1c** withers (of a horse). **2** side support. *kitf' baab* door-jamb. *ʃaktaaf kubri* end supports of a bridge. *sillim bi-ʃaktaaf [naut]* ladies' ladder. **3** *[naut]* bow. *kitf il-yimiin* the starboard bow.
كتفا *katifan: katifan silaaḥ [mil]* shoulder arms!
كتّافة *kattaafa* /n pl *-aat*/ epaulette, shoulder pad.
كتّف *kattif* /vt/ **1a** to bind the arms of, truss up. *talaata ykattifuu w-yiḥill' nafs-u* three people tie his hands behind his back and he gets himself loose. **1b** to truss (a fowl for cooking). *wizza mkattifa* (1) a trussed goose. (2) a whole goose. **2** to pin (s.o.'s) shoulders to the ground (in wrestling). - vn *taktiif*; ava/pva *mikattif*.
تكتيفة *taktiifa* /n pl *-aat*/ instance noun of *taktiif*.
مكتّف *mikattif* /pva/ ‖ *babuur mikattif [naut]* a weather-bound ship. - *makana mkattifa* a labouring engine.
اتكتّف ʃitkattif or ʃikkattif /vi/ passive of *kattif*. - iva *mitkattif*.

ك ت ك ت [1] see also ك ت ت [1]
كتكت *katkit'* /vt/ to call (chicks) by making the sound of kut-kut-kut. - vn *katkata*; ava/pva *mikatkit*.
كتكوت *katkuut* /n pl *ḳatakiit*/ chick, young chicken. *ʃilli yxaaf min il-ɛirsa ma-yrabbii-ʃ katakiit [prov]* he who fears the weasel raises no chicks. ‖ *ʃil-katkuut il-faṣiiḥ mil-beeḍa yṣiiḥ [prov]* ≈ talent shows itself early.
كتاكت *kataakit: ya ɋalb' ya kataakit yaama-nta ʃaayil* (or *saamiɛ) wi-saakit [women in trad soc]* poor heart, how much you bear in silence!
اتكتكت ʃitkatkit' or ʃikkatkit' /vi/ passive of *katkit'*. - vn *tikatkiit*; iva *mitkatkit*.

ك ت ك ت [2] see also ك ت ت [3]
كتكت *katkit*² /vt/ to make (hair) frizzy. - vn *katkata*; ava/pva *mikatkit*.
مكتكت *mikatkit* /adj */ kinky, frizzy (of hair).
اتكتكت ʃitkatkit² or ʃikkatkit² /vi/ to become or be made frizzy (of hair). - ava/iva *mitkatkit*.

ك ت ل
كتلة *kutla* /n pl *kutal, kutlaat*/ **1** block. *kutlit xaʃab* a block of wood. *kutlit tirbaas* breech block. **2** bloc. *ʃik-kutla ʃ-ʃarɋiyya* the Eastern bloc. **3** *[phys]* mass.
كتّل *kattil* /vt/ **1** to pile up, throw in a pile. *kattil il-ɛilab il-faḍya fir-rukn' da* pile up the empty cans in that corner. **2** to mass. *kattilu dabbabaat ɛal-ḥuduud* they massed tanks along the border. — /vi/ **3** to clot, form clots (of blood, and the like). - vn *taktiil*; ava/pva *mikattil*.
اتكتّل ʃitkattil or ʃikkattil /vi/ **1a** to be piled up. **1b** to be massed. **2a** to form a (political) bloc. **2b** to gang up. **3** to clot, form clots. - ava/iva *mitkattil*.

ك ت ل و ج
كتلوج *kataloog* <Fr> /n pl *-aat*/ **1** catalogue. **2** (instruction) manual.

ك ت ل ى ك
كاثوليك *katuliik* <Fr> /coll n/ Catholics. also *kasuliik*.
كاثوليكى *katuliiki* **1** /adj/ Catholic. **2** /n/ a Catholic. also *kasuliiki*.

ك ت م
كتم *katam (i)* /vt/ **1** to restrain, curb, suppress. *katam nafas-u* he held his breath. *ziɛilt' moot minnu bass' katamt' ʃ-nafs-i* I got very upset with him but hid my feelings. ‖ *ʃiktim sirr-ak (wi-ʃki l-rabb-ak) [prov]* keep your secret (and complain (only) to your Lord). **2** to muffle, dampen (sound). *ʃiʃ-ʃakmaan bi-yiktim ṣoot il-mutoor* the exhaust system muffles the sound of the engine. **3** to stop up, seal. *katam il-ɋidra ɋabl' ma kamar-ha* he sealed the *fuul* pot tight before burying it in the earth. *ʃiʃ-ʃiiʃa maktuuma* the water-pipe is block-

ed. **4** to inhale (smoke) and hold it in. **5** to silence, shut up. *ma tiktim il-waad* why don't you shut the kid up! **6a** *[soccer]* to trap (the ball) with the foot. **6b** to block a smash (in tennis or volleyball). — /vi/ **7** to become close, stuffy or oppressive (of weather). **8** to have an oppressive effect. *ʔil-ʔakl[i] kətam ɛala ɋalb-i* the food made me feel bloated. - vn *katamaan, katm, kitmaan*; ava *kaatim*; pva *maktuum*.

كتمة *katma[1]* /n/ **1** /pl *-aat*/ instance noun of *katm*. || *ʔitkatam katmit il-ɛads* (or *il-bunn*) to clam up. **2** /no pl/ stillness, closeness (of weather).

كتمان *kitmaan[1]* /n/ secrecy, confidential relationship.

كاتم *kaatim* /ava/ || *kaatim ṣoot* silencer (of a gun).

كاتمة *katma[2]* /n pl *-aat*/ damper (on a piano).

كتوم *katuum* /adj */ uncommunicative, reticent.

كتيمى *kutteemi* /adv/ in secret. *ʔitgawwizu kutteemi* they married secretly.

اتكتم *ʔitkatam* or *ʔikkatam* /vi/ **1** passive of *katam*. **2** to stop talking. *ʔikkasaft[i] wi-kkatamt* I got embarrassed so I shut up. *ʔitkitim katma* shut up! - ava/iva *mitkitim*.

انكتم *ʔinkatam* = *ʔitkatam*. - ava/iva *minkitim*.

كتم *kattim* /vi/ to keep quiet, maintain silence. *kattim ɛala l-mawɋuuɛ da* keep quiet on that subject. - vn *taktiim*; ava *mikattim*.

اتكتم *ʔitkattim* or *ʔikkattim* /vt/ to keep quiet about. *ʔikkattimit xabar wiladt-u* she concealed the news of his birth. - ava *mitkattim*.

ك ت ن

كتان *kittaan* /n/ **1** flax. *bizr[i] kittaan* linseed. **2** linen. **3** tow (used in caulking boats).

ك ت و ت

كتاوت see ك ت ا و ت : *kataawit*

ك ت ى ن

كاتينة *katiina* >It *catena*> /n pl *-aat, kataayin*/ **1** (fine) chain. *katiinit saaɛa* watch chain. **2** *[auto]* timing chain.

ك ث ب

كثب see [3] ك س ب

ك ث ر

كثر see ك ت ر

ك ث ف

كثف see [2] ك س ف

ك ث ل ك

كثلك see ك ت ل ى ك and ك س ل ك

ك ح ت

كحت *kaḥat (a)* /vt/ **1** to scrape. **2** *[surg]* to curette. - vn *kaḥt, kaḥataan*; ava *kaaḥit*; pva *makḥuut*.

كحيت *kaḥiit* /adj pl *kaḥaayit*/ seasoned, hardened, weathered. *mara kaḥiita* a woman who's been around.

كحّاته *kaḥḥaata* /n pl *-aat*/ curette.

اتكحت *ʔitkaḥat* or *ʔikkaḥat* /vi/ passive of *kaḥat*. - iva *mitkiḥit*.

انكحت *ʔinkaḥat* = *ʔitkaḥat*. - iva *minkiḥit*.

كحّت *kaḥḥat* /vt/ to scrape (a number of things, or one thing a number of times). - vn *takḥiit*; ava/pva *mikaḥḥat*.

مكحّت *mikaḥḥat* /adj/ penniless.

اتكحّت *ʔitkaḥḥat* or *ʔikkaḥḥat* /vi/ passive of *kaḥḥat*. - iva *mitkaḥḥat*.

ك ح ح

كحّ *kaḥḥ (u)* /vi/ to cough. - vn *kaḥḥ, kaḥaḥaan*; ava *kaaḥiḥ*.

¶ *kaḥḥ[i] maɛa* to argue with (s.o.). *ʔinta ḥa-tkuḥḥ[i] mɛaaya* will you argue with me?

كحّة *kaḥḥa* /inst n, pl *-aat*/ a single act of coughing, a cough.

كحّة *kuḥḥa* /n/ cough, ailment characterized by coughing. *kuḥḥa wiḥʃa* a bad cough.

ك ح ك

كحك *kaḥk* /coll n/ cookies of flour, butter, and sometimes a sweet filling or a dusting of sugar, baked for special occasions (religious feasts in particular). *baɛd il-ɛiid ma-yinfitil-ʃ[i] kaḥk [prov]* (after the feast, (the dough for) *kaḥk* is not twisted) ≈ you don't hang up streamers after Christmas.

كحكة *kaḥka* /n pl *-aat*/ **1** /unit n/ a cookie. *ʔil-kaḥka f-ʔiid il-yatiim ɛagaba [prov]* (a cookie in the hand of an orphan is a marvel) to some, a little can mean a lot. **2** *[naut]* salvage float. **3** *[slang]* five-pound note (among pickpockets). **4** *[slang]* fail-grade (among school-children).

كحكايه *kaḥkaaya* = *kaḥka* 1, 3, and 4.

ك ح ك ح

كحكح *kaḥkaḥ* /vi/ **1** to have a severe cough. **2** to become decrepit. *ɛarabiyya mkaḥkaḥa* a worn-out old car. - vn *kaḥkaḥa*; ava *mikaḥkaḥ*.

كحكح *kuḥkuḥ* /adj invar/ old, decrepit.

ك ح ك و

كحكو *kaḥku* /n/ style of serving in the game of *xara* (q.v.). - also *kaɛku*.

ك ح ل

كحل *kaḥal (i)* /vt/ **1** to apply kohl to (the eyes).

2 *[constr]* to point (bricks). - vn *kaḫalaan*; ava *kaaḫil*; pva *makḫuul*.

كحل *kuḫl* /n/ kohl, a black cosmetic powder based on antimony sulphide and used as eye-liner. ‖ *ʕid-dinya kuḫl* it's pitch dark out. - *gibaal ık-kuḫl' tifnii-ha l-maraawid [prov]* ≈ nothing lasts forever, however gradually it may be used up. - *yisraq ıl-kuḫl' mil-ɛeen [prov]* ≈ he could steal the spectacles off your nose (of an adroit thief).

كحلة *kuḫla*[1] /n/ manner or style of *kuḫl* adornment.

كحلة *kuḫla*[2] /n/ *[constr]* mortar between bricks, pointing. *kuḫla maqṣuuṣa* decorative pointing.

كحلى *kuḫlı* /adj invar/ dark blue.

أكحل *ʔakḫal* /adj, fem *kaḫla*, pl *kuḫlˤ*/ intensely black. *ʔakḫal ıl-ɛeen* having intensely dark irises contrasting with the surrounding whites.

كحول *kuḫuul* /n pl *-aat*/ alcohol.

كحيل *kuḫeel, kaḫiil* /adj/ **1** intensely dark (of the iris of the eye). **2** /pl *kaḫaayil*/ of good breed (of a horse).

كحول *kuḫull* /n pl *-aat*/ methylated alcohol, medicinal alcohol.

كحولى *kuḫullı, kuḫuuli* /adj/ alcoholic. *tasammum kuḫulli* alcoholic poisoning.

مكحلة *mukḫıla* /n pl *makaaḫil*/ vessel (usually of brass) for kohl. *maat wi-baqa ɛaḍm-u makaaḫil [prov]* (he's dead and his bones have become kohl vessels) he's been dead for ages.

اتكحل *ʔitkaḫal* or *ʔikkaḫal* /vi/ pasive of *kaḫal*. - iva *mitkıḫil*.

انكحل *ʔinkaḫal* = *ʔitkaḫal*. - iva *minkiḫil*.

كحّل *kaḫḫal* /vt/ to adorn (the eyes) with kohl. *kaḫḫalit ɛenee-ha w-baṣṣit fil-miraaya* she made up her eyes with kohl and looked in the mirror. ‖ *ɛayza ɛayyil tikaḫḫal-bu ɛnee-ha* she wants a child to be proud of. - *ga yıkaḫḫal-ha ɛamaa-ha [prov]* ≈ he came with the best of intentions and bungled badly. - vn *takḫiil*; ava/ pva *mikaḫḫal*.

اتكحّل *ʔitkaḫḫal* or *ʔikkaḫḫal* /vi/ to be made up with kohl (of eyes). - iva *mitkaḫḫal*.

ك ح ى

كحى *kiḫi (a)* /vi/ to become exhausted, become worn out. *ʔana kḫiit mif-fuṷl* I'm dead beat from work. - vn *kaḫayaan*; ava *kaḫyaan*.

كحيان *kaḫyaan* /adj */ worthless, rundown, worn out. *ɛarabiyya kaḫyaana* a beat-up old car. *ṭaalib ʔalf' gneeh ɛala frijideer kaḫyaan* asking a thousand pounds for a worthless two-bit refrigerator.

ك خ خ

كخه *kuxxa* or *kixxa* (also *kuxx* or *kixx [children]* **1** /adj invar/ bad, dirty. **2** /interj/ don't touch!

ك د ا

كدا، كده *kida* /adv/ **1** (also *kıdahú*) thus, so, in this (or that) way. *ʔıl-ʔawwil tirbuṭ-u kida* first you tighten it up like this. *kida mif saamıɛ* I can't hear like this. *mif kıda (walla ʔeeh)* is that so (or what)? *ʔahu kıda l-kalaam (walla balaaf)* that is the way things should be said (or else not at all). *turudd" ɛalee kıda trudd" ɛalee kida* (or *turudd' kıda kıda) ḫa-tiḫṣal ɛarka* if you pick an argument with him a fight will break out. ‖ *kıda w-kida* in a make-believe way, as in *b-aqul-lu xad ɛalaawa kıda w-kıda* I was pulling his leg when I told him he had been given a rise. - *ma-fii-ʃ kida* nothing like it, as in *raagıl ma-fii-ʃ kida* a man in a class of his own, *ɣadwa ma-fii-ʃ kıda* a marvellous dinner. - *bass' kıda* is that all? - *miʃ ɋadd' kida* not very good, so-so. - *kida kıda* (I like it) just so (comment of appreciation or approval). - *kida walla kida* superfluous, unaccounted for, as in *ma-ɛandak-ʃ' luɋma kida walla kıda* haven't you some left-over morsel or other? **2** approximately, about. *taɛaala kida s-saaɛa xamsa* come around five o'clock. *ḫ-agii-lak baɛd' ʔusbuuɛ kida* I'll come to see you in about a week. *ḫaaga kıda* an indescribable thing, as in *fii ḫaaga kida wara l-baab* there is something I cannot make out behind the door, *simiɛt" ḫaaga kida bı-tnadii-ni* I heard something, I didn't know what, calling me. **3** finally, at last, after all that time. *ʔıtḫarrak kida* just get a move on! *ɣannu kıda ya banaat* won't you ever sing, girls!? ‖ *ruuḫ kida* get the hell out of here! – /demonst pron/ **4** this, that. *ɋal-lak kida* did he tell you this? *miin ɛamal kida* who did this? *ʔana mwaafiɋ ɛala kida* I agree to this. *ʔiid-ak ɛala kida* let us shake hands on that. *m-aɋbal-ʃ' ʔaɋall' min kida* I accept nothing less than this. ‖ *ɛala kıda* (1) in this (or that) way, as in *ɋaɛadt" ɛala kida ʃahr* I carried on like this for a month, *wi-ɛala kida baqa bi-tḥibb* so, are you in love? (2) at this (or that) point, as in *sikıt ɛala kida* at that he stopped talking. (3) that being the case, as in *huuwa ɛala kida miʃ ḫa-yiigi* if that's the way things are, he won't be coming.

كذا *kaza* **1** /quantifier, w foll indef n/ several. *ʔil-milaffaat di ɛala kaza nooɛ* these folders are of several types. *kaza ḫuṣaan* several horses. **2** (also *kaza w-kaza*) indicator of an unspecified thing or action. *ʔiʃ-ʃiik raqam kaza* cheque number so-and-so. *ɛamalt' kaza w-kaza* I did such-and-such.

ك د ب

كذب، كدب *kidib* or *kadab* (also *kizıb) (i)* /vi/ to lie, tell

a falsehood. *ʕinta ḥa-tikdib ɛaleena kamaan* are you going to lie to us too? *ʕil-masal ma-yikdib-ʃ* the proverb speaks true. -vn *kidb*; ava *kaadib*.

كذب، كدب *kidb* (also *kizb*) /coll n/ lie(s). ‖*kidbʿ msaawi wala ṣidqʿ mbaɛzaq [prov]* straight lying is more credible than garbled truth. *ʕil-kidbʿ ma-luu-ʃ rigleen [prov]* lies have no legs.

كذبة *kidba* (also *kizba*) /unit n, pl *-aat*/ a lie, a falsehood. ‖*kidbit ʕabriil* April fool.

كاذب *kaazib* /adj/ false. *ḥamlʿ kaazib* false pregnancy. *balaaɣ kaazib [leg]* a false report to the police. ‖ *ʕil-gudari l-kaazib* chicken pox.

أكذب *ʕakdab* /el/ more/most false, lying or deceptive.

كذّاب، كدّاب *kaddaab* (also *kazzaab*) /adj */ **1** lying, given to lying. **2** false, spurious. ‖*nibill il-ʕarḍʿ balla kaddaaba* we wet the ground superficially. -*xayla kaddaaba* much ado to no purpose. — /n */ **3** liar. ‖*xallii-k wara k-kaddaab li-ḥaddʿ baab id-daar [prov]* (keep after the liar as far as the door of the house) go along with a liar until he gives himself away. -*ṣaaḥib baleen kaddaab (wi-ṣaaḥib talaata ʕakdab) [prov]* one who tries to do two things at once is fooling himself (and he who tries to do three fools himself even more). -*kaddaab iz-zaffa* one who is all talk and no action. **4** /no pl/ sulphuric acid when used to determine the purity of gold.

اتكذب *ʕitkadab* or *ʕikkadab* /vi/ (impersonal) passive of *kadab*. *ʕitkadab ɛaleena* we were lied to. -iva *mitkidib*.

كذّب، كدّب *kaddib* (also *kazzib*) /vt/ **1** to give the lie to, accuse of lying. *ɛaamit kaddibit-ni f-wiff-i* she up and called me a liar to my face. ‖ *ʕil-mayya tkaddib il-ɣaṭṭaas [prov]* ≈ the proof of the pudding is in the eating. **2** to contradict, deny. *kazzib xabar moot ʕabuu* he denied the news of his father's death. *katab gawaab bi-ykaddib ʃii maqaalit ʕimbaariḥ* he wrote a letter in which he refuted yesterday's article. **3** to refuse to believe *lamma ɛult-i-lhum il-ḥikaaya di kaddibuu-ni* when I told them the story, they refused to believe me. ‖*ma-kaddib-ʃʿ xabar* to act without delay (if somewhat blindly), as in *ma-kaddibtʿ-ʃ xabar wi-ruḥt aʃtiri fraax mig-gamɛiyya* without pausing for thought I went off to buy chickens from the co-op (as soon as I heard they had some for sale). — /vi/ **4** to misfire (of a gun). -vn *takdiib*; ava/pva *mikaddib*.

اتكذّب *ʕitkaddib* or *ʕikkaddib* /vi/ passive of *kaddib* 1, 2 and 3. -iva *mitkaddib*.

ك د ح

كدح *kadaḥ↑ (a)* /vi/ to work hard, toil. *ma-baṭṭalnaa-ʃ kadḥʿ ṭuul in-nahaar* we worked hard all day long. *ʕiṭ-ṭabaqa l-kadḥa* the working class. -vn *kadḥ*; ava *kaadiḥ*.

ك د د ¹

كدّ *kadd (u)* /vt/ *[trad soc]* to comb. *ruuḥi kuddi faɛr-ik* go and comb your hair. *ɛaɛda bi-tkuddʿ l-bint-a-ha* she's combing her daughter's hair. -vn *kadd*; ava *kaadid*; pva *makduud*.

اتكدّ *ʕitkadd* or *ʕikkadd* /vi/ to be combed (of hair). -iva *mitkadd*.

انكدّ *ʕinkadd* = *ʕitkadd*. -iva *minkadd*.

كدّد *kaddid* /vt/ to comb (hair) hard or repeatedly. -vn *takdiid*; ava/pva *mikaddid*.

اتكدّد *ʕitkaddid* or *ʕikkaddid* /vi/ passive of *kaddid*. -iva *mitkaddid*.

ك د د ²

كدّ *kadd (i)* /vi/ to toil. *bi-tkiddᵃ ɛaʃaan bint-a-ha* she slaves (at her work) for the sake of her daughter. -vn *kadd*; ava *kaadid*.

كدودى *kuduudi, kaduudi* /adj */ miserly, tight-fisted.

مكدود *makduud* /adj */ exhausted, tired.

ك د ر ¹

كدر *kadar* /n/ perturbation, disquiet. *ʕil-ɛiiʃa kull-a-ha kadar* life is full of trouble.

كدّر *kaddar* /vt/ **1** to perturb, trouble. *kutr il-maṣariif kaddarit ɛiʃit-na* great expenses have spoiled our lives. **2** *[mil]* to give a talking to, give a dressing-down. *ʕiẓ-ẓaabiṭ bi-ykaddar il-ɛasaakir* the officer is giving the soldiers a dressing-down. -vn *takdiir*; ava/pva *mikaddar*.

اتكدّر *ʕitkaddar* or *ʕikkaddar* /vi/ passive of *kaddar*. -iva *mitkaddar*.

تكدّر *takaddur* /n/ discomfort, uneasiness.

ك د ر ²

كادر *kadrʿ* <Fr *cadre*> /n pl *-aat*/ **1** frame. *bi-yirkab fil-kadrʿ btaaɛ il-biyaanu* it fits into the piano frame. **2** /pl also *kawaadir*/ = *kaadir*.

كادر *kaadir* (also *kadr²*) <Fr *cadre*> /n pl *kawaadir, kadraat*/ **1** pay scale. *ʕil-kaadir il-ɛaamm* the general pay scale. *ʕil-kaadir il-fanni* the professional scale. **2** organizational group, cadre. *ʕil-kawaadir is-siyasiyya* the political hierarchy. *kawaadir it-tanẓiim* the groupings within the (party) system.

ك د ر اج

كدراج *kadraaj* <Fr *cadrage*> /n/ *[cin]* centring.

ك د س
كدّس *kaddis* /vt/ to pile up. *zibaala mkaddisa ɛala baɛḍ-a-ha* rubbish in piles. -vn *takdiis*; ava/pva *mikaddis*.
اتكدّس *ʔitkaddis* or *ʔikkaddis* /vi/ to be piled up. -vn *takaddus*; ava *mitkaddis*.

ك د ش ¹
كدش *kadaʃ* /n/ bushy hair, kinky hair.
كدّش *kaddif* /vt/ to back-comb (hair). -vn *takdiif*; ava/pva *mikaddif*.

ك د ش ²
كديش *kadiif* /n/ work horse, nag. ‖*gamuusa kadiif* an old worn-out buffalo.

ك د م
كدمة *kadma* /n pl *-aat*/ bruise, contusion.

ك د ه see ك د ا: *kidahú*

(ك د ى)
كوديه *kudya¹* <Amharic> /n pl *-aat*/ professional leader of the Sudanese type of *zaar* (usually a black woman).
كديه *kudya²* /n pl *-aat, kudaɣ/ [rur]* bushy plant. *kudyit barsiim* a clump of clover.

ك د ى ا ن
كديانة *kudyaana* /n pl *-aat*/ *[coarse slang]* a woman to take to bed, a lay.

ك ذ ا see ك ز ا

ك ذ ب see ك د ب

ك ذ ل ك see ز ا

ك ر see also ك و ر ¹
كرة *kura¹* /n pl *-aat*/ **1** sphere. *ʔil-kura l-ʔarḍiyya* the earth, the globe. *niṣf' kura* hemisphere. ‖*kuraat id-damm* corpuscles. **2** ball (game). *kurat il-qadam* football. *kurat is-salla* basketball. *ʔil-kura ṭ-ṭaaʔira* volleyball.
كروى *karawi, kurawi¹* /adj/ **1** spherical. **2** pertaining to ballgames.

(ك ر ا ر)
كرار *karaar* (also *kalaar*) <Gr *kelari*> /n pl *-aat*/ pantry, storeroom, cellar. *yiḥarras il-ɋuṭṭ" ɛala muftaaḥ ik-karaar [prov]* (to make the cat the guardian of the storeroom key) appointing the fox to guard the chickens.
كرارة *karaara* <*Carrara* (in Italy)> /n/ Carrara marble.

ك ر ا ل
كورال *kuraal* <perh Fr> /n/ choir, chorale.

ك ر ب ¹
كرب *karb* /n/ **1** misery, wretchedness. *ʔil-fallaaḥ fi-blad-na ḥalt-u karb* the peasant in our country is in a bad way. **2** /pl *kuruub*/ affliction, tribulation. *ya mufarrig il-kuruub* (O you who dispel troubles) invocation to God in times of hardship. *ʔiza ʃtadda l-karbu haan [prov]* the severer hardship gets the nearer it is to being relieved ≈ the darkest hour is just before dawn.
كربة *kurba¹* /n pl *kurab*/ state of wretchedness.

ك ر ب ²
كوربة *kurba²* <perh It *curva*> /n pl *-aat, kurab/ [obsol]* street corner. *midaan ik-kurba* well-known square in Heliopolis.
كرّب *karrab* /vt/ *[tonstr]* to bend (pipe, rods). -vn *takriib*; ava/pva *mikarrab*.
اتكرّب *ʔitkarrab* or *ʔikkarrab* /vi/ passive of *karrab*. -iva *mitkarrab*.

ك ر ب ب
كريبّ *kiribb* <Fr *crêpe*> /n pl *-aat*/ crepe fabric. *gazma kribb* crepe-soled shoes.

ك ر ب ج ¹
كرباج *kurbaag* (also *kurbaak*) <T *kırbaç*> /n pl *karabiig*/ horsewhip.
كربج *karbag* (also *karbak*) /vt/ **1** to whip. *ʔil-waad karbag ın-naḥla* the boy whipped the spinning top. **2** to drive (s.o.) hard (to do s.th.). -vn *karbaga*; ava/pva *mikarbag*.
اتكربج *ʔitkarbag* or *ʔikkarbag* /vi/ passive of *karbag*. -vn *tikarbiig*; iva *mitkarbag*.

ك ر ب ج ²
كربج *karbij* <Fr *crêpage*> /vt/ to back-comb (hair). -vn *kiribaaj*; ava/pva *mikarbaj*.

ك ر ب ر -
كربراتير *karbirateer, karbarateer* <Fr> /n pl *-aat*/ carburettor.

ك ر ب س
كربس *karbis* /vt/ **1** to throw topsy-turvy in a pile. *karbisit il-huduum fir-rukn* she threw the clothes in the corner. **2** to trip, cause to stumble. *karbis-ni ʕibn ik-kalb* the s.o.b. tripped me up. - vn *karbasa*; ava/pva *mikarbis*.
اتكربس *ʕitkarbis* or *ʕikkarbis* /vi/ passive of *karbis*. - vn *tikarbiis*; iva *mitkarbis*.

ك ر ب ك see [1] ك ر ب ج: *kurbaak, karbak*

ك ر ب ظ
مكربظ *mikarbaẓ* /adj/ chubby.

ك ر ب ل
كربال *kurbaal* /n pl *karabiil*/ coarse-meshed riddle (used in threshing).

ك ر ب ن -
كربونات *karbunaat, karbunaat* <Fr> /n/ **1** carbonate. **2** baking soda, sodium bicarbonate. - also *bikarbunaat*.
كربوناتو *karbunaatu* <It> = *karbunaat*.

ك ر ب ه -
كربوهيدرات *karbuhidraat* <Engl> /coll n/ carbohydrate(s).

ك ر ب و ن
كربون *karboon* <Fr> /n/ carbon. *waraq karboon* carbon paper.

ك ر ب ى ن
كربينة *karbiina* <It *carabina*> /n pl *-aat*/ carbine.

ك ر ت [1]
كرت *karat[1], kirit (i)* /vt/ **1** to clap, slap. *karat-u ʕala qafaa* (1) he clapped him on the back of the neck. (2) he humiliated him. **2** to scratch. *ʕik-kalb[i] b-yikrit raqabt-u* the dog is scratching his neck. - vn *ʔart*; ava *kaarit*; pva *makruut*.
اتكرت *ʕitkarat[1]* or *ʕikkarat[1]* /vi/ **1** to be clapped, be slapped. **2** to be scratched. - iva *mitkirit*.
انكرت *ʕinkarat[1]* = *ʕitkarat[1]*. - iva *minkirit*.
كرّت *karrat* /vt/ to clap (s.o.) on the back of the neck. - vn *takriit*; ava/pva *mikarrat*.
اتكرّت *ʕitkarrat* or *ʕikkarrat* /vi/ to be clapped on the back of the neck. - iva *mitkarrat*.

ك ر ت [2]
أكرت *ʕakrat* /adj, fem *karta*, pl *kurt*/ frizzy. *kull-u-hum faʕr-u-hum ʕakrat* they all have frizzy hair.

ك ر ت [3] see also ك ر د [3]
كرت *karat[2] (i)* <prob Engl> /vt/ to card (cotton). - ava *kaarit*; pva *makruut*.
اتكرت *ʕitkarat[2]* or *ʕikkarat[2]* /vi/ to be carded (of cotton). - iva *mitkirit*.
انكرت *ʕinkarat[2]* = *ʕitkarat[2]*. - iva *minkirit*.

ك ر ت [4]
كارت *kart* <Fr *carte*> /n pl *kuruut, kurúta, kurutaat*/ **1** card. *kull[i] kart[i] maktuub fii raqam il-kitaab* each card has the book number written on it. *kuruut muʕayda* greetings cards. *ʕil-kart[i] bustaal* and *ʕil-kart il-bustaal* the postcard. **2** menu. — /coll n/ **3** playing-cards. *tilʕab kart* do you want to play cards?
كرّات، كرّاث *kurraat* /coll n/ leek(s). *kurraat ʕabu fuuʕa* leek (Allium porrum). *kurraat maṣri* or *kurraat baladi* Egyptian leek (Allium kurrat).

ك ر ت ت
كرتّة *karitta* <It *carretta*> /n pl *-aat*/ light carriage, on two or four wheels, drawn by a single draught animal.

ك ر ت ن see also ك ر ن ت -
كرتن *kartin* /vi/ **1** to effect a quarantine. *kartinu ʕal-balad* they put the town in quarantine. **2** to hold (on to s.th.), retain (s.th.) for oneself. *kartinu ʕala kutub il-maktaba* they hung on to the library books. - vn *kartana*; ava *mikartin*.
اتكرتن *ʕitkartin* or *ʕikkartin* /vi/ (impersonal) passive of *kartin*. *ʕil-manṭiqa kull-a-ha tkartin ʕaleeha* the entire area was put under quarantine. - iva *mitkartin*.

ك ر ت و ن [1]
كرتون *kartoon[1], kartuun[1]* <Fr *carton*> /n/ cardboard.
كرتونة *kartoona, kartuuna* /n pl *-aat, karatiin*/ **1** /unit n/ piece of cardboard. **2** cardboard box; carton.

ك ر ت و ن [2]
كرتون *kartuun[2], kartoon[2]* <Engl> /pl *-aat*/ animated cartoon.
كرتون *kiritoon* <Fr *crétonne*> /n/ heavy cotton fabric, cretonne. *kiritoon sataan* satin-finished cretonne.

ك ر ت ى ر
كارتير *karteer* <Fr *carter*> /n pl *-aat*/ *[auto]* oil pan, (also sometimes) crankcase.

ك ر ت ي ن
كرتينه *kartına* <It *cartina*> thin cardboard (used in book-binding).

ك ر ت ي ه
كارابيه *karateeh* /n/ karate.

ك ر ث [1] see ك ر ت [4]

ك ر ث [2] see ك ر س [3]

ك ر خ ا ن
كرخانه *karaxaana* <T *kerḫane*> /n pl/ *-aat*/ brothel. *kaan ḫayy il-ʕazbakiyya maʃhuur bıl-karaxaana l-kıbiira* the Ezbekiya quarter used to be famous for its large brothel.

ك ر د [1]
كرد *kurd* /coll n/ Kurds.
كردى *kurdi* **1** /adj/ Kurdish. **2** /n pl *ʕakraad*/ a Kurd. *bılaad il-ʕakraad* Kurdistan **3** /n, no pl/ the Kurdish language.

ك ر د [2]
كروديه *kurudya* <perh T *koroydo*> /masc and fem n, pl *-aat*/ very gullible or naive person, a swindler's mark.
كروديايه *kurudyaaya* /n/ very gullible or naive female, a swindler's mark.
استكرد *ʃıstakrad* /vt/ to dupe, take advantage of the gullibility of. *bı-yıstakradu l-mudarris ig-gıdıid* they take the new teacher for a ride. - vn *ʃistıkraad*; ava *mıstakrad*.

ك ر د [3] ( )
كرد *kard* <Engl *card*> /n/ carding of fibres preparatory to spinning. *ʃıl-quṭn' b-yruuḥ mın ʕamalıyyıt il-ḳard[a] ʕala t-tamʃiṭ* the cotton goes from carding to the combing process. see further under ك ر ت [3]
كورده *kurda* <It *corda*> /n pl *-aat*/ cord, wire.
كورد *kurd* /n/ *[mus]* mode in Arabic music beginning on D and having E flat and B flat.

ك ر د ا ن ( )
كردان *kırdaan'* <perh P *gardân*> /n pl *-aat, karadiin*/ **1** heavy gold necklace with pendant decorations (e.g., see Pl F, 20). **2** /pl *-aat* only/ *[mus]* name given to the note C, octave above middle C
كردان *kırdaan*[2] (also *ʕamuud il-kırdaan*) <prob Engl> /n/ *[auto]* Cardan joint, transmission shaft.

ك ر د ل
كردله *kurdılla* <It *cordella*> /n pl *-aat*/ cord by which a hunter secures and carries his game.

ك ر د و ن
كردون *kurdoon* <Fr *cordon*> /n pl *-aat*/ **1** cordon, decorative cord. *kurdoon roob* dressing-gown cord. **2** cordon. *kurdoon buliiṣ* police cordon. *kurdoon ṣiḥḥi* cordon sanitaire.

ك ر ر [1]
كرّ *karr' (u)* /vt/ **1** to unravel, unwind. *bı-ykurr il-xeeṭ min il-bakara* he's unwinding the thread from the spool. **2** to spill out, spout forth. *saʃalt-u ʕan ʃanwaaʕ is-samak in-nıli ʠaam karr-i-li talatiin ʃism* I asked him about the varieties of Nile fish and he upped and rattled off thirty names. — /vi/ **2a** to come unravelled. *ʃit-tirıkooh karr* the knitting has become unravelled. **3** to run (of a stocking). - vn *karr, kararaan*; ava *kaarir*; pva *makruur*.
كرّ *karr*[2] /adv/ fluently (of recitation from memory). *sammaʕ-u karr* I recited it without a hitch.
كراريّه *kurariyya* /n pl *-aat*/ ball (of string, wool etc.).
اتكرّ *ʃıtkarr* or *ʃikkarr* /vi/ passive of *karr* 1 and 2. - ava *mıtkarr*.
انكرّ *ʃınkarr* = *ʃıtkarr*. - iva *mınkarr*.
كرّر *karrar* /vt/ **1** to repeat, do over. *baʕd[a] ʕaʃart iyyaam nıkarrar il-ʕaziiq wır-rayy' marriteen* after ten days we repeat the hoeing and irrigation twice. ‖*ʕalaamıt takriir [mus]* repeat sign. **2** to distil, refine. *ʃıf-ʃirka b-taaxud il-bitrool wı-tkarrar-u* the company takes petroleum and refines it. *maʕmal takriir* refinery. - vn *takrıir, takraar, tıkraar*; ava/pva *mikarrar*; pva *mukarrar*.
تكرار *takraar, tikraar* /n/ repetition. *kutr it-takraar yiʕallim il-ḥumaar [prov]* much repetition teaches (even) a donkey.
مكرّر *mukarrar* /adverbial/ **1** bis. *ʃiṣ-ṣafḥa t-talta mukarrar* page three bis, page 3a. **2** in tied or equal position. *ʇiliʕ il-ʃawwil mukarrar* he came first equal, he tied for first place.
اتكرّر *ʃitkarrar* or *ʃikkarrar* /vi/ **1** to be repeated. **2** to recur. **3** to be refined, be distilled. - iva *mitkarrar*.

ك ر ر [2] see ك ر ا ر : *karaar, karaara*

ك ر ر [3] see ك ر ى ر ا : *kureera*

ك ر ر و
كرّو *karru* <It *carro*>: *(ʕarabıyya) karru* /pl *ʕarabiyyaat karru*/ animal-drawn cart.

ك ر ز ¹
كرازة *kiraaza* /n/ *[Chr]* **1** domain or jurisdiction of the (Coptic) church. **2** preaching the Gospel, evangelization.
كرّز *karraz* /vt/ *[Chr]* to consecrate, dedicate (to the service of God). *ʕabuu-na karraz il-beet* the priest consecrated the house. - vn *takriiz*; ava/pva *mikarraz*.
اتكرّز *ʔitkarraz* or *ʔikkarraz* /vi/ to be consecrated, be dedicated (to the service of God). - iva *mitkarraz*.

ك ر ز ² see ك ر ى ز ¹: *kireez, kireeza, kirezaaya*

ك ر ز ² see ك ر ى ز ²: *kiriiza*

ك ر س ¹
كرسى *kursi* /n pl *karaasi*/ **1** chair. *kursi ʠahr* straight-backed chair. *kursi hazzaaz* rocking chair. **2** stand. *kursi muṣḥaf* Koran stand. ‖ *ʕaayit ik-kursi [Isl]* the 'throne verse' (Koran 2:255), recited for safety in time of danger. **3** *[Chr]* see. **4** *[mech]* **4a** seating. **4b** bearing. **5** single filling (of tobacco or hashish) for a water-pipe. **6** motif used in tent appliqué work (see Pl.H. 24).
كرّس *karras¹* /vt/ to prepare (a filling of tobacco or hashish) for smoking in a water-pipe. - vn *takriis*; ava/pva *mikarras*.
اتكرّس *ʔitkarras¹* or *ʔikkarras¹* /vi/ passive of *karras¹*. - iva *mitkarras*.

ك ر س ²
كرّاس *kurraas, karraas* /n pl *-aat, karariis*/ copybook, exercise book.
كرّاسه *kurraasa, karraasa* = *kurraas*.
كرّس *karras²* /vt/ to dedicate, devote. *karras ḥayaat-u lil-ʃann* he devoted his life to art. - vn *takriis*; ava/pva *mikarras*.
اتكرّس *ʔitkarras²* or *ʔikkarras²* /vi/ passive of *karras²*. - iva *mitkarras*.
متكرّس *mutakarris* /n */ *[Chr]* layman who has given up secular employment to work within the church.

ك ر س ³
كارثه *karsa* /n pl *kawaaris, karsaat*/ catastrophe.
اكترث *ʔiktaras¹* /vi/ to show concern, display interest. *ʕeer muktaris bi-maṣaayib ʕahl-u* indifferent to his family's plight. - vn *ʔiktiraas*; ava *muktaris, miktiris*.

ك ر س ا ج
كرساج *kursaaj* <Fr *corsage*> /n/ top half of a dress, bodice.

ك ر س ت
كرسته *karasta* <T *kereste*> /n/ **1** lumber mill. **2** cabinet(s), cupboard(s).

ك ر س ت -
كريستال *kiristaal* <Fr> /n/ crystal (glass).

ك ر س ر -
كرسريه *karusreeh* (also *kursaleeh, karsaleeh)* <Fr *carrosserie*> /n pl *-aat*/ body of an automobile.

ك ر س ط
كرسطه *karasṭa* /n pl *-aat*/ carpet-saver made of glass, castor-cup.

ك ر س ع
كرسوع *karsuuɛ* /n pl *karasiiɛ*/ elbow. *ḥaaṭiṭ karasiiɛ* leaning on his elbows. ‖ *ʃumm¹ karasiiɛ* a bony hag.

ك ر س ل - see ك ر س ر -: *kursaleeh, karsaleeh*

ك ر س ى ن
كيروسين *kirusiin* <Engl> /n/ kerosene, paraffin.

ك ر س ى ه
كرسيه *kurseeh* <Fr *corset*> /n pl *-aat*/ corset.

ك ر ش ¹
كرس *karaʃ, karaf (u)* /vt/ **1** to drive away, drive off. *karaʃt¹ mraat-ak barra leeh* why did you throw your wife out? *lamma ʕanaam ɠat-tilitwaar yiigi l-ʏafiir yukruf-ni* when I sleep on the sidewalk the watchman comes and drives me away. **2** to dismiss, fire, expel. *ʕil-mudiir karaf-u min if-fuyl* the director sacked him. **3** to cause (breathing) to be laboured. *nafas makruuf* laboured breathing, dyspnoea. - vn *karf, karafaan*; ava *kaarif*; pva *makruuf*.
كرسه *karfa* /n pl *-aat*/ instance noun of *karf*. *karfit nafas* (attack of) dyspnoea.
انكرس *ʔitkaraf, ʔitkaraf* or *ʔikkaraf, ʔikkaraf* **1** to be driven away. **2** to be dismissed, be expelled. *ʕit-tilmiiz itkaraf mil-madrasa* the student was expelled from the school. **3** to be made or become laboured. *nafas-u yitkirif* he's becoming short of breath. - ava/iva *mitkirif*.
انكرس *ʔinkaraf, ʔinkaraf* = *ʔitkaraf*. - ava/iva *minkirif*.

ك ر ش ²
كرس *kirf* /n pl *kuruuf*/ paunch, pot belly.
كرسة *kirfa* /n/ tripe. ‖ *ɠaliil il-baxt¹ ylaaɠi l-ɠaḍm¹ fil-*

kırfa [prov] the unlucky man finds bones (even) in tripe. - *bi-yṭallaɛ fil-kirfa ɛaḍm* ≈ he looks for the worst in everything.
كرسانى *kurafaati* /n pl *-yya*/ tripe-seller.
كرّس *karraf* /vi/ **1** to develop a paunch or pot belly. **2** to buckle, warp. - vn *takriif*; ava *mikarraf*.

ك ر ش [3] see ك ر و ش : *kuruuf*

ك ر ش [4] see ك ر ى ش : *kureefa*

ك ر ش ى ه
كروسيه *kurufeeh* <Fr> /n/ crochet.

ك ر ع [1]
كرّع *karraɛ* /vt/ to cause to belch. - vn *takriiɛ*; ava *mikarraɛ*.
تكريعة *takriiɛa* /inst n, pl *-aat*/ a belch.
اتكرّع *ʔitkarraɛ* or *ʔikkarraɛ* /vi/ to belch, burp. *yaklu l-fatta w-yitkarraɛu w-yiḥmidu rabb-i-na* they eat *fatta*, burp (contentedly), and praise the Lord. - ava *mitkarraɛ*.

ك ر ع [2]
كارع *kaarıɛ* **1** /n pl *kawaarıɛ*/ camel, sheep or cow's foot used for food, trotter. **2** *kawaariɛ* /pl n/ pretty legs.

ك ر ف
كرف *karaf (u)* /vi/ to absorb an odour from surroundings (of food, and the like). - vn *karf*; ava *kaarif*.
كرفه *karfa* /n/ **1** odour absorbed by food, tobacco etc. from their surroundings. **2** *[path]* eczema.

ك ر ف ت ت
كرفته *karafatta, karafitta* <It *cravatta*> /n pl *-aat*/ tie, cravat. - also *garafatta*.

ك ر ف س
كرفس *karafs* /n/ celery.

ك ر ك [1]
كوريك *kureek* [1] <T *kürek*> /n pl *-aat, kawarıık*/ **1** shovel. **2** baker's peel.
كرّاك *karraak* /n pl *karraaka*/ *[constr]* workman who controls the shovel that is dragged through concrete to mix it.
كرّاكة *karraaka* /n pl *-aat*/ dredger. *dı ɛarabiyya walla karraaka* ≈ what this car needs is a new car.
كرّك *karrak* /vt/ to dredge. - vn *takriik*; ava/pva *mikarrak*.
اتكرّك *ʔıtkarrak* or *ʔıkkarrak* /vı/ to be dredged. - iva *mıtkarrak*.

ك ر ك [2]
كوريك *kureek* [2] <Fr *cric*> /n pl *-aat, kawarıık*/ **1** (hydraulic) lifting ramp. **2** car jack.
كارك *kaarik* **1** /vt/ to jack up. **2** /vi/ to pump repeatedly (e.g., when pumping the brake pedal). - vn *mıkarka*; ava/pva *mikaarik*.

ك ر ك [3]
كرك *kurk* <T *kurk*> /n/ fur.

ك ر ك [4] see ك ر و ك ى : *kuruuki*

ك ر ك ب
كركب *karkıb* /vi/ **1** to make a clattering noise. *naazil yikarkıb bı-rıglee ɛas-sillım* he is clattering down the stairs. ‖*baṭn-i bı-tkarkıb* (1) my stomach is rumbling, I have an upset stomach. (2) I feel apprehensive, I have butterflies in my stomach. **2** to become topsy-turvy. *ʔid-dınya karkıbit* everything became chaotic. – /vt/ **3** to throw into confusion. *karkib il-beet wi-mıʃ* he made a mess of the house and left. - vn *karkaba*; ava/pva *mikarkıb*.
كركوبه *karkuuba* **1** /n pl *karakiib*/ piece of junk, worthless possession. **2** /adj invar/ old, tottering.
كركّبه *karkubba* = *karkuuba* 2.
اتكركب *ʔitkarkıb* or *ʔikkarkıb* /vi/ **1** to make a clattering noise. **2** to be thrown into confusion. - vn *tikarkıb*; ava/iva *mıtkarkıb*.

ك ر ك ت –
كركتير *karıkateer* <Fr> /n invar, also pl *-aat*/ caricature, cartoon.

ك ر ك د –
كركديه *karkadeeh* /n/ **1** type of mallow (Hibiscus sabdarifa), the dried (purple) flowers of which are used in the preparation of a popular infusion. **2** a drink so prepared.

ك ر ك ر
كركر *karkar* /vi/ **1** to gurgle, make a gurgling sound (of liquid). ‖*bi-ykarkaru (ɛag-gooza)* they're smoking a water-pipe. **2** to pink, knock (of a car engine). **3** to laugh at length. *karkarna (mın ıd-dıḥk)* we laughed and laughed. - vn *karkara*; ava *mikarkar*.

ك ر ك ع
كركع *karkaɛ* /vı/ **1** to make a rattling sound. *simiɛt'*

karkaɛa fil-mutoor I heard a rattling in the motor. **2** to guffaw. *karkaɛ (min id-diḥk)* he roared with laughter. - vn *karkaɛa*; ava *mikarkaɛ*.

ك ر ك م
كركم *kurkum* /n/ turmeric.

ك ر ك ن د
كركندى *karakandi* /n pl *-aat*/ type of tumbler pigeon with pale grey plumage.

ك ر ك و ل see ك ر ك و ن : *karakool*

ك ر ك و ن
كراكون *karakoon* (also *karakool*) <T *karakol*> /n pl *-aat*/ police station. || *karakoon silaaḥ* present arms!

ك ر ك ى ه
كروكيه *kurukeeh, kirukeeh* <Fr> /n/ croquet.

ك ر ل see ك ر ا ل : *kuraal*

ك ر م [1]
كرم *karam[1] (i)* /vt/ to favour, be generous to, bestow good fortune on. *karamuu-na* they were most generous to us. *rabb-i-na karam-ni w-laqeet taks[i] ɛala ṭuul* I was lucky enough to find a taxi right away. || *ɛeen makruuma [euphem]* blind eye. - vn *karam*; ava *kaarim*; pva *makruum*.
كرم *karam[2]* /n/ generosity. || *karam il-ʔaxlaaq* decency.
كرامه *karaama* /n/ **1** dignity, honour, self-respect. *ṭaɛanit-ni f-karamt-i* she hurt my pride. **2** /pl *-aat*/ miracle performed by a saint. || *kull-ak karamaat* you can do the impossible.
كريم *kariim* /adj/ **1** /pl *kiraam, kuraam, kurama*/ generous, munificent. *rabb-i-na kariim* ≈ God will provide (phrase used in times of stress and as a gentle refusal to give to a beggar). || *kariim ɛeen [euphem]* one-eyed person. **2** /pl *kiraam*/ honourable, noble. *ma tdumm[i] nafs-ak li-fillit naas kiraam* why don't you get involved with some honourable people? || *ʔil-qurʔaan il-kariim* conventional designation of the Koran. - *ḥagar kariim* precious stone. — /n/ **3** Generous One (epithet of God). *liina rabb[i] ʔism-u l-kariim* we have a Lord whose name is the Generous One (expression of despair or helplessness or, when addressed to another, of consolation).
كريمة *kariima* /n/ **1** /pl *-aat*/ formal mode of reference to a daughter. **2** /no pl/ *[joc]* a kiss on the hand. *ʔiltaɛ il-kariima* kiss the hand!

أكرم *ʔakram[1]* /el/ more/most generous, munificent etc.
اتكرم *ʔitkaram* or *ʔikkaram* /vi/ passive of *karam[1]*. - iva *mitkirim*.
انكرم *ʔinkaram* = *ʔitkaram*. - iva *minkirim*.
كرّم *karram* /vt/ to honour. *ḥaflit takriim* party given in someone's honour. - vn *takriim*; ava/pva *mikarram*.
اتكرّم *ʔitkarram* or *ʔikkarram* /vi/ **1** to be honoured. **2** to be generous, be kind. *ʔiza tkarramt* if you would be so kind, please. - ava/iva *mitkarram*.
كارم *kaarim* /vt/ to treat generously. *da-ḥna zabayn-ak ya-xuu-ya - karim-na* we're your steady customers, why don't you give us special treatment? - vn *mikarma*; ava *mikaarim*.
أكرم *ʔakram[2]* = *karam[1]* (the literary passive *yukram* also occurs). *ʔallaah yikrim-ak* (1) expression of thanks for a service rendered or to be rendered, or for a compliment paid. (2) response to a beggar's importuning ≈ may God grant you good fortune! - *ʔakram-ak allaah* no offence taken! (said in the event of unseemly words or behaviour). - *ʔikraam il-mayyit dafn-u [prov]* the (best) favour you can do a dead man is to bury him. - vn *ʔikraam*; ava *mikrim*.
إكراميّه *ʔikramiyya* /n pl *-aat*/ gratuity, tip. *di ma-tuɛtabar-ʃ[i] rafwa di ʔikramiyya* this shouldn't be considered a bribe, it's a gratuity.

ك ر م [2]
كروم *kuruum* /pl n/ **1** grapes. **2** vineyards.

ك ر م [3] see ك ر ى م : *kireem, kiriim, kireema*

ك ر م ا ن
كرمان *kirmaan* /n/ woollen carpet characterized by red colour and geometric pattern.

ك ر م ب
كرنب *kurumb* /coll n/ cabbage(s). *kurumb[i] ya-lli tiḥʃi [vendor's cry]* cabbage for stuffing!
كرنبه *kurumba* /unit n, pl *-aat*/ a head of cabbage.
كرنبى *kurumbi* /adj invar/ pale green, cabbage-green.

ك ر م ب –
كرمبلين *kirimbiliin* <Engl> /n/ crimplene, a synthetic jersey fabric.

ك ر م ش
كرمش *karmiʃ* **1** /vt/ to wrinkle, crumple. **2** /vi/ to become wrinkled or crumpled. - vn *karmaʃa*; ava/pva *mikarmiʃ*.
اتكرمش *ʔitkarmiʃ* or *ʔikkarmiʃ* /vi/ **1** to become wrink-

led or crumpled. **2** to be wrinkled or crumpled. - ava/iva *mıtkarmif*.

ك ر م ل ل
كرملّه *karamılla* <It *caramella*> **1** /coll n/ caramel, toffee. **2** /unit n, pl *-aat*/ a piece of caramel, a toffee.
كرملّايه *karamıllaaya* = *karamılla* 2.

ك ر ن see ك ر ى ن : *kırıina*

ك ر ن ب see ك ر م ب

ك ر ن ت see also ك ر ت ن –
كرنتينه *karantiina* <It *quarantena*> /n/ quarantine.

ك ر ن د م
كورندم *kurundum* <Engl> /n/ corundum

ك ر ن ر
كورنر *kurnar* <Engl> /n pl *-aat, karaanır*/ **1** *[soccer]* **1a** corner kick. **1b** corner of a soccer pitch. **2** corner of a boxing ring. ‖*ḥaṭṭ-u f-kurnar* he cornered him, he put him in an awkward or difficult position.

ك ر ن ك
كرنك *karank* <Engl> /n pl *-aat*/ crank. *ʒılbıt ıl-karank* crankcase. *ʒamuud ıl-karank* crankshaft.

ك ر ن م –
كرونومتر *kurunumıtr* <Fr> /n pl *-aat*/ chronometer.

ك ر ن و ه
كرنوه *kurnuh, kurnooh* <It *corno*> /n pl *-aat*/ *[mus]* **1** French horn; particularized as *kurnuh faransaawi*. **2** cor anglais, English horn, particularized as *kurnuh ʕingiliizi*.

ك ر ن ى ت
كرنت *kurneet* <Engl> /n/ *[mus]* cornet.

ك ر ن ى ش
كورنيس *kurnıʃ, kurneeʃ* <Fr *corniche*> /n/ **1** road that skirts a river or sea. **2** *[arch]* cornice. – /pl *karaniiʃ*/ **3** frill, ruffle, flounce

ك ر ن ى ه
كرنيه *karneeh* <Fr *carnet*> /n pl *-aat*/ **1** identity card. **2** membership card

ك ر ه
كره *kirih, karah (a)* /vt/ to hate, detest. *ʕilli ıkrah-u yḥıbb-u ʒeer-ak [prov]* what you hate another likes, one man's meat is another man's poison. *ḥıbb' w-waarı wı-krah wi-daarı [prov]* ≈ show your love discreetly, but hide your hate completely. - vn *kurh, karaaha, karahiyya, kuruhiyya*; ava *kaarih*, pva *makruuh*
كريه *karuh* /adj */ hateful, odious, obnoxious, loathsome.
أكره *ʔakrah'* /el/ more/most hateful, odious etc. *ʔakrah ma ʕalayya* ... the thing I hate most is ..
اتكره *ʔitkarah* or *ʔikkarah* /vi/ to be hated, be detested. - iva *mitkirih*.
انكره *ʔinkarah* = *ʔitkarah* - iva *minkirih*.
كرّه *karrah* /vt/ to cause to hate *ʔir-raagil da karrah-ha fig-gawaaz* that man made her hate marriage. - vn *takriih*; ava *mikarrah*.
اتكرّه *ʔitkarrah* or *ʔikkarrah* /vi/ to be made to hate. - iva *mitkarrah*.
أكره *ʔakrah²* /vt/ to force, coerce. *ʔakrah-ni ʕas-sirʕa* he forced me to steal. - vn *ʔikraah*; ava *mukrih*; pva *mukrah*.
إكراه *ʔikraah* /n/ coercion, force. ‖*sirʕa bil-ʔikraah* armed robbery

ك ر و
كروان *karawaan* /n pl *-aat*/ curlew, any of the various types of shore birds of the genus Numenius

ك ر و ت
كروت *karwit* /vt/ to do carelessly *ʔis-sabbaak karwit if-fuvl' w-saab il-ḥanafiyyaat bi-ttınn* the plumber did a sloppy job and left the taps leaking. - vn *karwata*; ava/pva *mikarwit*.
اتكروت *ʔitkarwit* or *ʔikkarwit* /vi/ to be done carelessly. - vn *ikarwiit*; ava *mitkarwit*

ك ر و س –
كرواسان *kurwasaan* <Fr> /n/ croissant.

ك ر و ش
كروش *kuruuʃ* <Fr *croche*> /n pl *-aat*/ *[mus]* quaver, eighth-note. *dubl' kuruuʃ* semi-quaver, sixteenth-note.

ك ر و ك ى
كروكى *kuruukı* <Fr *croquis*> /n/ **1** rough sketch. **2** sketch map.

ك ر و م
كروم *kuroom* <Engl> /n/ chrome.

(ك ر و ن)
كراون *kirawin* <Engl> /n/ *[dent]* crown or cap of a tooth.
كرونه *kuroona* <It *corona*> /n pl *-aat*/ **1** *[auto]* differential gear. **2** crown or button (of a watch). **3** wreath (of flowers etc.).

ك ر و ه
كروه *karooh* <Fr *carreau*> /n pl *-aat*/ **1** check, square. *ʂumaaʃ karohaat* checkered or plaid cloth. **2** shoulder pad (in men's tailoring). — /no pl/ **3** diamond(s) (in cards).

ك ر و ى
كراويه *karawya* /n/ caraway.

ك ر و ى ت
كرويته *karaweeta, karawiita* <T *kerevet*> /n pl *-aat*/ **1** wooden bench. **2** sofa.

ك ر ى [1]
كرى *kara (i)* /vt/ to rent, hire. *ħa-nikri ʕarabiyya* we'll rent a car. - vn *kira*; ava *kaari*; pva *makri*.
كرى *kira* /n/ rental fees, rent.
اتكرى *ʃitkara* or *ʃikkara* /vi/ to be rented, be hired. - iva *mitkiri*.
انكرى *ʃinkara* = *ʃitkara*. - iva *minkiri*.

ك ر ى [2] see ك ا ر ى : *kaari*

ك ر ى ر ا
كوريرا *kureera* <It *colera*> /n/ cholera. - also *kuleera*.

ك ر ى ز [1]
كريز *kireez* <T *kiraz*> /coll n/ cherries.
كريزة *kireeza* /unit n, pl *-aat*/ a cherry.
كريزاية *kirezaaya* = *kireeza*.

ك ر ى ز [2]
كريزه *kiriiza* <Fr *crise*> /n pl *-aat*/ outburst. *gat-li kriizit dilħ* I burst out laughing.

ك ر ى ش
كوريسه *kureefa* /n/ **1** thin crepe fabric. **2** crepe paper.

(ك ر ى م)
كريم *kireem, kiriim* <Fr *crème*> /n/ **1** cream. *gibna dubl' kreem* double cream cheese. *kireem ʃantii* whipped cream. **2** /pl *-aat*/ cosmetic cream (for the hair or face). *kireem ʃasaas* foundation cream.

كريمه *kireema* <It *crema*> /n/ **1** (also *kireema labbaani*) cream. **2** white sauce. **3** cream pudding.

ك ر ى ن
كرينه *kiriina* <poss It *crine*> /n/ shredded vegetable fibre (especially palm fibre) used as flock in upholstery.

ك ر ى ه
كريه *kareeh* <Fr *carré*> /n pl *-aat*/ **1** square cut (in hairdressing). **2** four-of-a-kind (in poker).

ك ز ا see ك د ا : *kaza*

ك ز ا ك
كزاك *kazaak* <Fr *casaque*> /n/ shirt worn loose (as opposed to being tucked into the trousers).

ك ز ا ل ك see ز ا : *ka-zaalik*

ك ز ب see ك د ب : *kizib, kizb, kizba, kaazib, kazzaab, kazzib*

ك ز ب ر
كزبره *kuzbara* (also *kusbara*) /n/ coriander.

ك ز ز [1]
كزّ *kazz' (i)* /vi/ to bite down. *kazz" ʕala ʂubaaʕ-i* he bit down on my finger. *kazz" ʕala ʂasnaan-u* he clenched his teeth. - also *gazz*. - vn *kazz, kazazaan*; ava *kaaziz*.

ك ز ز [2]
كزّ *kazz² (i)* /vi/ **1** to contract, shrink. *ʂil-fustaan kazz* the dress has shrunk. ‖*kazz ʕalayya d-diħk* I felt I was going to burst out laughing. **2** to feel aversion or distaste. *bi-ykizz' min il-kalaam fil-mawaḍiiʕ if-faxṣiyya* he hates to discuss personal matters. **3** to feel disgusted or revolted. *kazzeet min riiħit il-ʂakl* I was revolted by the smell of the food. — /vt/ **4** to shrink, contract. *ʂil-mayya kazzit il-fustaan* the water made the dress shrink. ‖*raagil kazz* tightwad, skinflint. - vn *kazz, kazazaan*; ava *kaaziz*.

ك ز ز [3] see ك ز و ز : *kazuuza, kazuuza*

ك ز ك [1]
كزكه *kazaka* <T *kazık*> /n pl *-aat, kazak*/ pole, post (for telephone, telegraph, lighting). - also *ʕazaʕa*.

ك ز ك [2] see ك ز ا ك : *kazaak*

ك ز ل ك [1]
كزلك *kazlak* <T *gezlik*> /n pl *kazaalik*/ small sharp knife used for boning, skinning etc.

ك ز ل ك [2] see ز ا : *ka-zaalik*

ك ز ن see also ك و ز
كزّن *kazzin* /vi/ to put forth ears (of maize). - vn *takziin*; ava *mikazzin*.

ك ز ن و
كازينو *kazinu* (also *kaziinu*) <It *casino*> /n pl *-haat, -waat*/ **1** place of refreshment (often in the open air). **2** night-club.

ك ز و ز
كازوزة *kazuuza, kazuuza* <Gr *gazoza*> /n/ pop, any sweet carbonated beverage. ‖*qaaɛ fil-kazuuza* ≈ it went down the drain. - also *ʕazuuza, gazuuza*.

ك ز ى see ك ا ز ى : *kaazi*

ك ز ى ن و see ك ز ن و : *kaziinu*

ك س ا ت ا
كاساتا *kasaata* <It *cassata*> /n/ Neapolitan ice cream.

ك س ب [1]
كسب *kisib (a)* /vt/ **1** to earn (money), make (money). *bi-tiksab kaam fif-ʃahr* how much do you make a month? *ɧ-aruuɧ ʕaftaval fil-kuweet w-aksab ziyaada ɛan hina xamas marraat* I'm going to work in Kuwait and earn five times what I get here. ‖*kisibna ṣalaat in-nabi* we made nothing out of the deal. **2** to win, gain. *ʕiksab maɛrakt-ak hina l-ʕawwil* win your battle here first. **3** to defeat (in a game). *ʕil-ʕahli ksib-ku talaata ṣifr* the Ahli team defeated you three nil. — /vi/ **4** to make a profit. *beeɛa kasbaana* a profitable sale. - vn *kasb, kisb*; ava *kaasib, kasbaan*.
كسب *kasb*ˆ /n/ profit, earnings. *ɖariibit kasb il-ɛamal* tax on earned income.
أكسب *ʕaksab*ˈ /el/ more/most profitable.
كسّيب *kassiib* /n pl *kassiiba*/ one who earns good money, man of steady means. *ya baxt-a-ha gawwizit bint-a-ha l-gadaɛ kassiib* what luck! she married her daughter to a good earner.
مكسب *maksab* /n pl *makaasib*/ profit, gain, earning.
اتكسب *ʕitkasab* or *ʕikkasab* /vi/ **1** to be earned. **2** to be won. - iva *mitkisib*.
انكسب *ʕinkasab* = *ʕitkasab*. - iva *minkisib*.

كسّب *kassib* /vt/ **1** to cause to make money. *ʕazmit is-sukkar kassibit-u ktiir* the sugar shortage earned him big profits. ‖*ʕallaah la ykassib-ak* may you never be successful! **2** to cause to win. *kaanit iz-zuruuf bass illi kassibit-u l-musabɋa* it was only the circumstances that allowed him to win the competition. **3** to cause to be won. *ʕil-kalaam miʃ huwwa lli ykassib il-ɧarb* it isn't talking that will win the war. - vn *taksiib*; ava *mikassib*.
اتكسّب *ʕitkassib* or *ʕikkassib* /vi/ passive of *kassib*. - iva *mitkassib*.
أكسب *ʕaksab*[2] /vt/ to impart to, cause to acquire. *ʕif-fuɧuum bi-tiksib il-gild*ˈ *raxaawa* tallow makes the leather soft. - vn *ʕiksaab*; ava *muksib*.
مكسب *muksib*ˆ /n pl *-aat*/ additive or agent (used to impart a specific quality). *muksibaat ɋawaam* thickening agents (in printing or dyeing). *muksibaat iṯ-ṭaɛm*ˈ *wil-loon wir-riiɧa* additives which impart taste, colour and smell (to foods).
اكتسب *ʕiktasab* /vt/ to acquire, gain. *ʕiktasabt il-xibra di fil-maktab* I acquired this skill at the office. - vn *ʕiktisaab*; ava *miktisib, muktasib*; pva *muktasab*.

ك س ب [2]
كسب *kusb* <P *kusb*> /n/ animal fodder made of pressed cotton seed.
كسبه *kusba* /n/ sesame seed pressings (a favourite food of children).

ك س ب [3]
كبان *kusbaan* /pl n/ dunes.

ك س ب ر see ك ز ب ر : *kusbara*

ك س ت ب
كستبان *kustıbaan* /n pl *-aat*/ **1** thimble. ‖*kustibaan buṣla* compass cap. **2** /pl *kusabṭin*/ thimble-shaped plectrum.

ك س ت ت
كسيتّ *kasitt* <Fr> /n pl *-aat*/ **1** cassette (of film or magnetic tape). **2** cassette tape-recorder or player.

ك س ت ر [1]
كستور *kastuur* <perh Engl *castor*> /n/ cotton flannel, winceyette. *kastuur is-sittaat* or *kastuur sataan* fleecy-backed cotton satin.
كستر *kastar*ˈ /vt/ *[text]* to impart a napped surface to, nap. - vn *kastara*; ava/pva *mikastar*.

ك س ت ر ²
كستر *kastar*² <Engl> /n/ custard, custard powder. - also *kastard(a)*.

ك س ت ر د
كستردة *kastarda* (also *kastard*) <Engl> /n/ custard, custard powder. - also *kastar*.

(ك س ت ل ل)
كستلّة *kastilla* <poss It *castello*> /n pl *-aat*/ **1** tank or body of a primus stove. **2** *[coarse]* arse.
كستلّه *kustilla: zawyit kustilla [eng, carp]* mitre square.

ك س ت ل -
كستليتة *kustaleeta, kustuleeta, kustaleeta, kustalitta* <It *costoletta*> /n pl *-aat, -aat*/ cutlet, chop.

ك س ت ن
كستنه *kastana* <perh Gr *kastano*> /n pl *-aat*/ **1** chestnut. **2** stopper.
كستناوى *kistinaawi* /adj/ dark grey (of a horse).

ك س ت ن -
كستنّتة *kastanitta* <prob It *castagnetta*> /n pl *-aat*/ castanets.

ك س ت ى ر
كستير *kastiir* <T *küstüre*> /n pl *kasatiir*/ *[carp]* iron, or cutter, of a plane.

ك س ح ¹
كسح *kasaḥ (a)* /vt/ **1a** to sweep, clear out, clear away. *lissa b-yiksaḥu l-ʔalɣaam miṭ-ṭuruq* they're still clearing the roads of mines. **1b** to drain or pump out (a cesspool). **2** to rout, wipe out. *kasaḥt-u fif-faṭarang* I wiped him out in chess. ‖*xaff*ⁱ *kaasiḥ* he came charging in. - vn *kasḥ*; ava *kaasiḥ*; pva *maksuuḥ*.
كسحة *kasḥa*¹ /pl *-aat*/ instance noun of *kasḥ*. *raaḥ fi-kasḥa* he went to hell.
كاسحة *kasḥa*² /n pl *kaasiḥaat*/ sweeper (ship). *kasḥit ʔalɣaam* mine-sweeper. *kasḥit talg* ice-breaker.
كسّاحة *kassaaḥa* /n pl *-aat*/ sweeper (ship). *kassaaḥit ʔalɣaam* mine-sweeper.
اتكسح *ʔitkasaḥ* or *ʔikkasaḥ* /vi/ passive of *kasaḥ*. - iva *mitkisiḥ*.
انكسح *ʔinkasaḥ* = *ʔitkasaḥ*. - iva *minkisiḥ*.
اكتسح *ʔiktasaḥ* /vt/ to dominate. *ʔil-ʔahli ktasaḥ il-malɛab* the Ahli team dominated the field. - vn *ʔiktisaaḥ*; ava *miktisiḥ, muktasiḥ*.

ك س ح ²
كسح *kisiḥ (a)* /vi/ **1** to become crippled. **2** to become bent (of metal). - vn *kasaḥaan, kasḥ*; ava *kasḥaan*.
كساح *kusaaḥ* /n/ rickets.
كسيح *kasiiḥ* /adj pl *kusaḥa*/ crippled.
كسّح *kassaḥ* /vt/ **1** to cripple. **2** to bend (metal). - vn *taksiiḥ*; ava/pva *mikassaḥ*.
تكسيحة *taksiiḥa* /n pl *takasiiḥ*/ angle, bend (in metal).
مكسّح *mikassaḥ* /n */ cripple. ‖*mikassaḥ yugurr*ⁱ *mkassaḥ wi-yquul yalla nitfassaḥ [prov]* one cripple pulls another and says 'Come on! Let's go for an outing!' (of those who disregard their defects or limitations).
اتكسّح *ʔitkassaḥ* or *ʔikkassaḥ* /vi/ **1** to be crippled. **2** to be bent (of metal). - iva *mitkassaḥ*.

ك س د
كسد *kisid (a)* /vi/ to stagnate. *ʔif-fuɣlⁱ kaasid il-yomeen dool* business is slow these days. - vn *kasaad*; ava *kaasid, kasdaan*.
كساد *kasaad* /n/ stagnation, slackness (of business).
كسّد *kassid, kassad* /vt/ to cause to stagnate. - vn *taksiid*; ava/pva *mikassid*.
اتكسّد *ʔitkassid* or *ʔikkassid* /vi/ to become stagnant. - ava *mitkassid*.

ك س ر ¹
كسر *kasar (a)* /vt/ **1** to break, fracture. *fingaan maksuur* a broken cup. *ʔaksar dimaaɣ-ak* I'll break your head! ‖*kasar ir-raqam il-qiyaasi* he broke the record. - *kasar bi-xaaṭir* see *xaaṭir*. - *kasar ɛeen(-u)* (1) to lower the eyelids. (2) to buy (s.o.) off, as in *ḥa-tiksar ɛeen-i b-ɣadwa* do you think you can buy me off with a lunch invitation? - *kasar in-naḥs* to break the (run of) bad luck. - *kasar il-ʔifaara* to shoot (or run) the traffic-light. - *kasar waraa qulla* (he broke a pitcher behind him) he said good riddance to him. - *kasar ḥiddit* to take the edge off, as in *ʔid-dawa kasar ḥiddit il-wagaɛ* the medication numbed the pain. - *maksuur il-ginaaḥ* helpless, in need of protection. - *nifs-u maksuura* he is downcast. - *ʔiksar if-farr* let's avoid ill-feeling (by argument etc.). **2** to break open, force entry into. *ʔil-maṭaafi kasaru f-faqqa* the firemen broke into the apartment. **3** to lower (a flag or the like). *ʔis-sawwaaq kasar il-bundeera* the driver flipped the meter-flag over. **4** to cut (front teeth, of animals). — /vi/ **5** to break (in billiards or pool). **6** to veer, swerve. *sawwaaq ḥumaar kasar ɛalayya fif-faariɛ* an ass of a driver swerved in front of me in the street. **7** *[mus]* to lose the beat. - vn *kasr, kasr*; ava *kaasir*; pva *maksuur, maksuur*.

كسر *kasr* /n pl *kusuur*/ **1** breakage(s), damage(s). *nisba mil-xidma mixaṣṣaṣa lil-kasr* a percentage of the service charge allotted for breakage. **2** fracture. *ʕil-migabbaraati yʕaalig il-kusuur* the bonesetter treats fractures. **3** *[geol]* fault. **4** fraction. *ʕil-kusuur il-iʕtiyaadiyya* common fractions. *ʕil-kusuur il-ʕafriyya* decimal fractions. *nuṣṣ ' saaʕa w-kusuur* half an hour and then some. *yitkallif gineeh wi-kusuur* it costs a little over a pound. **5** *[slang]* fifty-piastre note. — /adj invar/ **6** fragmented, scrap. *xafab kasr* wood chips. *ṭuub kasr* broken brick. *dahab kasr* gold scrap.

كسرة *kasra, kasra*[2] /n pl *-aat, kusar*/ **1** /inst n/ a break, a fracture. **2** break, indentation. **3** crease. **4** dart, tuck (in dressmaking). — /pl *-aat* only/ **5** *[gram]* vowel sign for short *i* (in Arabic writing).

كسرة *kisra*[1] /n pl *kisar, kisraat*/ fragment, small piece. *kisrit ʕeef* a crumb of bread.

كساره *kusaara* /coll n, pl *-aat*/ chips.

كسور *kasuur* /adj/ fragile.

كسورة *kasuura. loola k-kasuura ma-kaanit il-faxuura* see *faxuura.*

كسير *kasiir*[1] /adj/ shattered, defeated. *kasiir il-ʔalb* broken-hearted.

كسّارة *kassaara* /n pl *-aat*/ any implement used for breaking. ‖*kassaarit bunduʔ* nutcracker.

مكسر *maksar: (baṭṭiix) ʕala l-maksar* (water-melon) sold after being cut open in order to reveal its ripeness. *ya baṭṭiix ya-lli ʕala l-maksar [vendor's cry]* guaranteed-ripe water-melon!

اتكسر *ʕitkasar* or *ʕikkasar* /vi/ passive of *kasar.* - iva *mitkisir.*

انكسر *ʕinkasar* = *ʕitkasar.* - iva *minkisir.*

منكسر *minkisir* /adj */ down-trodden. *rabb-i-na maʕa l-minkisriin (gaabir) [prov]* God is with the down-trodden.

كسّر *kassar* /vt/ **1** to break into pieces, smash to bits. *ʕakassar il-ʕaḍm ' bis-saṭuur* I break up the bones with the cleaver. *bi-ykassar guzʕ ' minnu b-dinamiit* he blows off part of it with dynamite. ‖*kassart ' dmaav-i* you've driven me up the wall! - *kassar maʔadiif(-u)* ≈ to take the wind out of (s.o.'s) sails. - *kassar kalaam(-u)* to disobey (s.o.). **2** to break (down). *tikassar-li l-gineeh da min faḍl-ak* would you give me change for this pound note, please! **3** to crease, crumple. *ʕif-fanṭa kassarit il-huduum* the suitcase crumpled the clothes. **4** to copulate with, impregnate (of a male domestic fowl). - vn *taksiir*; ava/pva *mikassar.*

مكسّرات *mikassaraat* /pl n/ nuts (usually almonds, walnuts and hazelnuts) and raisins etc.

اتكسّر *ʕitkassar* or *ʕikkassar* /vi/ **1** to be broken into pieces, be smashed. **2** to shatter, break into pieces. *ʕil-ʔizaaz itkassar* the glass shattered. **3** to be or become tired out. *riglay-ya tkassarit* my legs have given out. *muxx-i tkassar* my brain is worn out. - ava/iva *mitkassar.*

كاسر *kaasir* /vt/ **1** to jostle, push and elbow. *bi-yuqaf fil-ʕutubiis yikaasir (in-naas) wi-yzaahim* he stands in the bus jostling (people) and shoving. ‖*ʕil-ʕarabiyya kasrit-ni* the car cut in and hit me. **2** to play at Indian wrestling with. - vn *mikasra*, ava *mikaasir.*

[2] ك س ر see ك ت ر : *kasra*[1]

ك س ر ا

كسرى *kisra*[2] /prop n/ Chosroes. *law ʕandi maal kisra ma-kaffa* if I had Chosroes' wealth it would not be enough.

ك س ر ل

كسرولّه *kasarulla* <It *casseruola*> /n pl *-aat*/ saucepan

ك س ر و ن

كسرونه *kasaroona* = *kasarulla.*

ك س س

كسّ *kuss* /n pl *ʕiksaas, kusuus, ʕaksaas*/ *[coarse]* cunt. *kuss umm-ak* (up) your mother's cunt!

كسّيس *kassiis* /n pl *kassiisa*/ *[coarse slang]* arse-kisser, brown-noser.

كسّس *kassis* /vi/ *[coarse]* to kiss arse, brown-nose. *ʕaxii-na da dayman bi-ykassis lil-mudiir* our friend there is always brown-nosing the director. - vn *taksiis*; ava *mikassis.*

مكسّساتى *mikassisaati* /n pl *-yya*/ *[coarse]* arse-kisser, brown-noser.

اتكسّس *ʕitkassis* or *ʕikkassis* /vi/ (impersonal) passive of *kassis. mitkassis luhum* they're much fawned on. - iva *mitkassis.*

ك س ع م

كسعم *kasʕam* /vt/ to demolish, wipe the floor with. *ʕiskut walla ʕakasʕam-ak* shut up or I'll flatten you! - vn *kasʕama*; ava/pva *mikasʕam.*

اتكسعم *ʕitkasʕam* or *ʕikkasʕam* /vi/ passive of *kasʕam.* - iva *mitkasʕam.*

ك س ف [1]

كسف *kasaf (i)* /vt/ **1** to shame, make ashamed. ‖*ʕallaah yiksif-ak* you should be ashamed, shame on

you! **2** to embarrass. **3** to cause to be shy. - vn *kasafaan, kasf, kusuuf*; ava *kaasif*; pva *maksuuf*.
كسفة *kasfa* /n pl *-aat*/ **1** instance noun of *kasf*. **2** sharp reply, rebuff, brush-off.
كسوف *kusuuf* /n/ eclipse. *kusuuf if-fams* solar eclipse.
اتكسف *ʔitkasaf* or *ʔikkasaf* /vi/ **1** to be or become ashamed. **2** to be or become embarrassed. **3** to become shy. - ava/iva *mitkisif*.
انكسف *ʔinkasaf* = *ʔitkasaf*. - ava/iva *minkisif*.

ك س ف [2]
كثافة *kasaafa* /n/ density. *ʔil-kasaafa s-sukkaniyya* population density.
كثيف *kasiif* /adj/ dense, thick.
كسّف، كثّف *kassif* /vt/ **1** *[chem, phys]* to condense. **2** *[phot]* to apply a double-fixing process to (film). - vn *taksiif*; ava/pva *mikassif*.
مكثّف *mukassif* /n pl *-aat*/ condenser.
اتكسّف، اتكثّف *ʔitkassif* or *ʔikkassif* /vi/ passive of *kassif*. - iva *mitkassif*.
تكثّف *takassuf* /n/ condensation.

ك س ك ت ت
كسكيتّة *kaskitta* <Fr *casquette*> /n pl *-aat*/ cap with a peak.

ك س ك س [1]
كسكس *kaskis* **1** /vt/ to back (up) (usually an animal or vehicle). **2** /vi/ to move backwards, back up (usually of an animal or vehicle). - vn *kaskasa*; ava/pva *mikaskis*.
اتكسكس *ʔitkaskis* or *ʔikkaskis* /vi/ to be backed up, be moved backwards. - iva *mitkaskis*.

ك س ك س [2]
كسكسي *kuskusi* /n/ couscous, dish based (in Egypt) on granules of steamed dough.

ك س ل
كسل *kisil (a)* /vi/ to behave lazily. *bi-yiksal ʕan kull[a] ḥaaga* he's too lazy for anything. - vn *kasal*; ava *kaslaan*.
كسل *kasal* /n/ laziness, sloth.
كسلان *kaslaan* /adj pl *-iin, kasaala↑*/ lazy, sluggish. *ma-tibqaa-ʃ kaslaan* don't be lazy. *kibd-i kaslaan* my liver is sluggish. ‖*fatlit ik-kaslaana* overlong thread (in sewing).
كسلى *kusali* or *kisali* /adj * and pl *kusaliyya*/ lazy, slothful, indolent.
أكسل *ʔaksal* /el/ more/most lazy, sluggish etc.
كسول *kasuul* /adj * and pl *-kasaala*/ lazy, indolent.
كسّل *kassil* **1** /vt/ to make lazy. *kassilt-i-ni ʕan is-safar* you've made me feel that it's too much effort to go away. **2** /vi/ to let things slide, make no effort to do anything. *kaan ʕandi fuṛl[i] ktiir laakin kassilt* I had a lot of work to do but couldn't bring myself to make the effort. - vn *taksiil*; ava/pva *mikassil*.
اتكاسل *ʔitkaasil* or *ʔikkaasil* /vi/ to act lazily. *lamma ykuunu mif ʕayziin yiʕmilu fuṛla yitkaslu* when they don't want to do a job, they slack. - vn *takaasul↑*; ava *mitkaasil*.

ك س ل ك
كنلكة *kaslaka* /n/ Catholicism, Catholic practice.
كاثوليك *kasuliik* /coll n/ Catholics. - also *katuliik*.
كاثوليكي *kasuliiki* **1** /adj/ Catholic. **2** /n pl *kasuliik*/ a Catholic. - also *katuliiki*.
الكاثوليكيّة *ʔil-kasulikiyya* /n/ Catholicism.
اتكلك *ʔitkaslik* or *ʔikkaslik* /vi/ to convert to Catholicism, become Catholic. - ava *mitkaslik*.

ك س ل ك –
الكاثوليكون *ʔil-kasulikuun* <Gr *ḳatholikôn*> /n/ *[Chr]* the Catholic Epistle(s).

ك س م
كسم *kasm* <T *kesim*> /n/ shape, form, appearance.
كسمة *kasma* /n/ fit (of a garment).
كسّم *kassim* /vt/ to fit (an item of clothing) to the form. *fustaan mikassim* a well-fitted dress. - vn *taksiim*; ava/pva *mikassim*.
اتكسّم *ʔitkassim* or *ʔikkassim* /vi/ passive of *kassim*. - iva *mitkassim*.

ك س و see ك س ى : *kiswa*

ك س ى
كسى *kasa (i)* /vt/ **1** to clothe, provide with clothing. *ma-fii-ʃ filuus ʔaksi wlaad-i* I have no money to clothe my children. *rabb-i-na kasii-ha b-gamaal-u* God has clothed her in beauty. **2a** to cover (usually with cloth). **2b** to upholster. - vn *kisa, kasayaan*; ava *kaasi*; pva *maksi*.
كسوة *kiswa* /n pl *kasaawi*/ **1** clothing, wear. *kiswit iṣ-ṣeef* summer wear. **2** covering. *kiswit il-kaʕba* the black embroidered canopy which covers the Kaaba.
اتكسى *ʔitkasa* or *ʔikkasa* /vi/ **1** to be clothed. **2a** to be covered (usually with cloth). **2b** to be upholstered. - iva *mitkisi*.
انكسى *ʔinkasa* = *ʔitkasa*. - iva *minkisi*.

ك ش ح
كشح *ʿafaḥ (a)* /vt/ **1** to scrape away, remove by scrap-

ing. *ʃikʃaḫ-ha b-sikkiina* scrape it off with a knife. **2** *[slang]* to drive away, chase away. - vn *kaʃḫ, kaʃaḫaan*; ava *kaaʃiḫ*; pva *makʃuuḫ*.

انكشح *ʃinkaʃaḫ* /vi/ **1** to be scraped away, be removed by scraping. **2** *[slang]* **2a** to push off, bugger off. ‖ *ʃinkiʃiḫ fi-dahya min sikkit-i* get the hell out of my way! **2b** to be driven away, be chased away. **3** *[slang]* to pop off, kick the bucket. - ava/iva *minkiʃiḫ*.

اتكشح *ʃitkaʃaḫ* or *ʃikkaʃaḫ* = *ʃinkaʃaḫ*. - ava/iva *mitkiʃiḫ*.

ك ش د see ك ش ى د : *kaʃiida*

ك ش ر

كشر *kiʃir* /adj */ grim-faced, beetle-browed, frowning.

أكشر *ʃakʃar* **1** /el/ more/most grim-faced etc. **2** /adj fem *kaʃra*/ grim-faced.

كشّر *kaʃʃar* /vi/ to frown, scowl, knit one's brows. *laazim tidḫak miʃ tikaʃʃar* you should laugh not scowl. - vn *takʃiir*; ava *mikaʃʃar*.

اتكشّر *ʃitkaʃʃar* or *ʃikkaʃʃar* /vi/ (impersonal) passive of *kaʃʃar*. *ma-yṣaḥḥ'-ʃ yitkaʃʃar lil-ʕiyaal ʕaṣ-ṣubḥ* one shouldn't frown at the children first thing in the morning. - iva *mitkaʃʃar*.

ك ش ر ى

كشرى *kuʃari* <Hindi *khichrī*> /n/ dish of rice, lentils, and sometimes macaroni topped with fried onions and hot sauce. ‖ *ḫaʃiiʃ kuʃari* mixture of tobacco and powdered hashish. - *ʃaay kuʃari* drink of tea made in a glass by adding water to the leaves.

ك ش ش [1]

كشّ *kaʃʃ[1] (i)* /vi/ **1** to shrink; *law yitʁisil bi-mayya suxna ykiʃʃ* if it is washed in hot water it will shrink. **2** to shrink, draw back. *bi-tkiʃʃ' minni leeh* why do you shrink from me? ‖ *kaʃʃ' f-gild-u* he was scared stiff. - *kiʃʃ* (1) keep to the limits of decency! (2) shoo! (to a dog). - vn *kaʃʃ, kiʃʃiyya, kaʃaʃaan*; ava *kaaʃiʃ*.

¶ *kaʃʃ' ʃi-* to snap at, burst out at.

كشّة *kaʃʃa* /pl *-aat*/ instance noun of *kaʃʃ*.

كشّاش *kaʃʃaaʃ* /adj */ timid, cowardly.

اتكشّ *ʃitkaʃʃ[1]* or *ʃikkaʃʃ[1]* /vi/ (impersonal) passive of *kaʃʃ[1]*. *ʃitkaʃʃ' fiiha* she was snapped at. - iva *mitkaʃʃ*.

انكشّ *ʃinkaʃʃ[1]* = *ʃitkaʃʃ[1]*. - iva *minkaʃʃ*.

كشّش *kaʃʃiʃ[1]* /vt/ to cause to shrink. - vn *takʃiiʃ*; ava/pva *mikaʃʃiʃ*.

اتكشّش *ʃitkaʃʃiʃ[1]* or *ʃikkaʃʃiʃ[1]* /vi/ passive of *kaʃʃiʃ[1]*. - iva *mitkaʃʃiʃ*.

ك ش ش [2]

كشّ *kiʃʃ* <P *kish*> (also *kiʃʃ' malik*) /interj/ **1** check! (in chess). **2** *[slang]* behave yourself!

كشّ *kaʃʃ[2] (i)* /vt/ *[chess]* to put (a king) into check. - vn *kaʃʃ, kaʃaʃaan*; ava *kaaʃiʃ*; pva *makʃuuʃ*.

اتكشّ *ʃitkaʃʃ[2]* or *ʃikkaʃʃ[2]* /vi/ passive of *kaʃʃ[2]*. - iva *mitkaʃʃ*.

انكشّ *ʃinkaʃʃ[2]* = *ʃitkaʃʃ[2]*. - iva *minkaʃʃ*.

كشّش *kaʃʃiʃ[2]* /vt/ *[chess]* to put (a king) into check. - vn *takʃiiʃ*; ava/pva *mikaʃʃiʃ*.

اتكشّش *ʃitkaʃʃiʃ[2]* or *ʃikkaʃʃiʃ[2]* /vi/ passive of *kaʃʃiʃ[2]*. - iva *mitkaʃʃiʃ*.

ك ش ط

كشط *kaʃaṭ (u)* /vt/ **1** to scrape, scrape clean. *kaʃaṭt il-barkeeh wi-ʃiddeetu blastik* I scraped the parquet floor clean and gave it a plastic surface. **2** to scrape off, scratch off. *ʃayy' kaʃṭ' fiʃ-ʃiik yilʁii* any scratching-out on the cheque will invalidate it. - vn *kaʃṭ*; ava *kaaʃiṭ*; pva *makʃuuṭ*.

كشّاطة *kaʃʃaaṭa* /n pl *-aat*/ scraper.

مكشط *makʃaṭ* /n pl *makaaʃiṭ*/ whittling knife.

اتكشط *ʃitkaʃaṭ* or *ʃikkaʃaṭ* /vi/ **1** to be scraped, be scraped clean. **2** to be scraped off, be scratched off. - iva *mitkiʃiṭ*.

انكشط *ʃinkaʃaṭ* = *ʃitkaʃaṭ*. - iva *minkiʃiṭ*.

ك ش ط و ر

كشطورة *kaʃṭuura* <It *costura*> /n pl *-aat*/ patch (of cloth, leather, plastic, and the like).

ك ش ف

كشف *kaʃaf (i)* /vt/ **1** to expose, uncover. *kaʃaf il-kizaan lif-fams[a] ʕaʃaan tinʃaf* he put the corn cobs in the sun to dry. *ʃikʃifii ʕaʃaan ʃaʃuuf il-garḥ* uncover him so that I can see the wound. *kaʃafna ʁalṭit-u* we exposed his mistake. ‖ *kaʃaft-ak* I've found you out, I've got your number! - *wiʃʃ-u makʃuuf* he's shameless. - *liʕba makʃuufa* an obvious trick. - *ʕala l-makʃuuf* openly, frankly, as in *xallii-na nitkallim ʕala l-makʃuuf* let's speak frankly. **2** to remove (a covering). *ʃikʃif is-sitaara ʕan if-ʃibbaak* pull the curtain away from the window. ‖ *raagil makʃuuf ʕannu l-ḫigaab* a man who can read the unknown. — /vi/ **3a** to make an investigation. *bi-yikʃifu ʕan il-bitrool* they are looking for oil. *kaʃaft[a] ʕala l-ʕarabiyya min guwwa* I inspected the inside of the car. *ʃid-duktuur kaʃaf ʕalayya* the doctor examined me. **3b** to subject oneself to a medical examination. *ʕabl' ma safirt' ruḥt' kaʃaft* before I travelled, I went and

had a medical examination. -vn *kaff, kafafaan*; ava *kaafif*; pva *makfuuf*.

كشف *kaff* **1** /vn/ ‖*gazma kaff* slip-on shoe. -*faarit kaff [carp]* jack plane. — /n pl *kufuuf*/ **2** discovery. **3** (first) medical examination (at which a doctor makes a diagnosis and prescribes treatment - as opposed to a progress check). — /also pl *kufufaat*/ **4** list, register. *kaff[i] ḥsaab* bill, invoice, list of expenditures. *kufufaat il-murattabaat* payroll. **5** *[mus]* upper register.

كشفة *kaffa* /n pl -*aat*/ **1** instance noun of *kaff*. **2** discovery.

كاشف *kaafif[1]* /n pl *kuffaaf*/ *[obsol]* provincial governor.

كشّاف *kaffaaf* /n pl -*aat*/ **1** spotlight, searchlight. *kaffaaf ɛarabiyya* car headlight. **2** list. *kaffaaf higaaʕi* an alphabetical list. — /pl *kaffaafa*/ **3** scout. — /pl -*iin*/ **4** inspector. *kaffaaf nuur* electricity meter reader. *kaffaaf gumruk* customs inspector.

الكشّافة *ʕik-kaffaafa* /n/ the Boy Scout Organization.

اتكشف *ʕitkafaf* or *ʕikkafaf* /vi/ passive of *kafaf*. -iva *mitkifif*.

انكشف *ʕinkafaf* = *ʕitkafaf*. -iva *minkifif*.

كاشف *kaafif[2]* /vt/ to speak plainly to (s.o.), put (s.o.) in the picture. *yiṣaḥḥ[i] tkaafif ʕaxuu-k bil-mawḍuuɛ qabl[i] ma yismaɛ bii min barra* you'd better let your brother in on the matter before he hears about it from an outsider. -vn *mikaffa, mukaffa*; ava *mikaafif*.

اتكاشف *ʕitkaafif* or *ʕikkaafif* /vi/ passive of *kaafif[2]*. -iva *mitkaafif*.

اكتشف *ʕiktafaf* /vt/ to discover. *ʕiktafafu maqbara firɛoniyya* they discovered a Pharaonic tomb. *baɛd[i] mudda ktafaft inni ɣalṭaan* after a while I discovered that I was mistaken. -vn *ʕiktifaaf*; ava *miktifif, muktafif*; pva *muktafaf*.

استكشف *ʕistakfif* /vi/ to explore, reconnoitre. -vn *ʕistikfaaf*; ava *mistakfif*.

مستكشف *mustakfif* /n */ explorer.

ك ش ك [1]

كسك *kufk[1]* /n/ elongated swirl of feathers found on the breasts of pigeons of certain breeds.

كشك *kufuk* /adj/ having a *kufk* (of a pigeon).

كسكى *kufki* /n pl *kufkaat*/ pigeon having a *kufk*.

(ك ش ك)[2]

كشك *kifk* <P *kashk*> /n/ **1** dish of a creamy consistency based on chicken stock thickened with milk or yoghurt and flour. ‖*huwwa farxa b-kifk* or *ɛand il-mudiir* he's the boss's pet. *ḥaaga farxa b-kifk* or *ɛandi* something I really like. **2** /coll n/ small round cakes made of crushed green wheat, salt and sour milk and dried hard to be eaten either uncooked or stewed in a stock as 1.

كشك *kufk[2]* (also *kufuk [rur]*) <T *köşk*> /n pl *kifaak, ʕikfaak, ʕakfaak*/ **1** kiosk. **2** any small wooden hut (e.g., kennel, sentry-box, signal-box). **3** metal stand or oven placed over fire on which a *makwagi* heats his irons.

ك ش ك ا ر

كشكار *kufkaar, kifkaar* /n/ coarsest grade of flour. *kifkaar daayim wala ɛalaama maqṭuuɛa [prov]* better continuing coarse flour than intermittent fine flour.

ك ش ك ش

كشكش *kafkif* /vt/ **1** to gather (cloth). **2** /vi/ to be gathered, smocked, pleated etc. (of cloth). -vn *kafkafa*; ava/pva *mikafkif*.

اتكشكش *ʕitkafkif* or *ʕikkafkif* /vi/ to be gathered. -iva *mitkafkif*.

ك ش ك ل –

كشك الماز، كشك الماظ *kifkalmaaz* <T *kuşkonmaz*> /n/ asparagus.

ك ش ك و ل

كشكول *kafkuul* <P *kashkûl*> /n pl *kafakiil*/ **1** thick copybook, thick exercise book. **2** scrapbook. ‖*kafkuul maɛlumaat* a grab-bag of information.

ك ش م ى ر

كشمير *kafmiir* <Engl> /n/ **1** cashmere (wool). **2** leaf design typical of paisley pattern (used on cloth and wood carving). — /adj invar/ **3** decorated with a paisley pattern.

ك ش ى د

كشيدة *kafiida* <T *keşide*> /n/ *[callig]* lengthening line between two letters.

ك ش ى ه

كوشيه *kufeeh* <Fr *couché*>: *waraq kufeeh* art paper, coated paper.

ك ط ط

كطّ، كتّ *kaṭṭ* <prob Engl *cut*> /adj invar/ **1** short. *kumm[i] kaṭṭ* short sleeve. *ʃaraab kaṭṭ* ankle-length socks. **2** sleeveless (of a dress). *fustaan kaṭṭ* a sleeveless dress. *hiyya labsa kaṭṭ* she's wearing a sleeveless dress.

ك ظ ظ

اكتظّ ʔiktaẓẓ /vi/ to become packed to capacity. - vn ʔiktiẓaaẓ; ava miktaẓẓ.

اكتظاظ ʔiktiẓaaẓ /n/ overcrowding.

مكتظّ miktaẓẓ /adj/ overcrowded, jam-packed.

ك ع ب

كعب kaʕb /n pl kuʕuub, kiʕaab, kuʕúba↓/ **1a** heel (of a foot). ‖*kaʕb' daayir* a ubiquitous person. - *farkit kaʕb* just a step, a stone's throw. **1b** heel (of a shoe). *hiyya labsa kaʕb* she's wearing (high) heels. ‖*kaʕb' ʕaali* a woman, as in *ħaasib ya ʔusṭa fii kaʕb' ʕaali* watch it, driver! there's a skirt getting on (or off)! **1c** spur (of a chicken's foot). ‖*mitʕallim il-kaʕb' wil-xanṣar* he's been around, he wasn't born yesterday. **1d** object resembling a heel in function or position. *kaʕb' ʕaṣaaya* ferrule. *kaʕb' ktaab* spine of a book. **2** end, bottom. *kaʕb' muxṭaaf* anchor crown. *kaʕb' ṣafħa* bottom of a page. *kaʕb' il-ʕiyaas* the end of the mat. **3** official stub, duplicate in brief. *ʔil-kuʕuub bitaaʕit ʔif-fikaat* cheque stubs. *kaʕb' ħwaala* stub of a money order, used as a receipt. *kaʕb[a] ʕamal* stub from the government employment office, acknowledging receipt of an application for work. — /pl *kuʕuub* only/ **4** corner motif in tent appliqué work (see Pl.H, 20).

الكعبة ʔil-kaʕba /prop n/ the Kaaba, the shrine in Mecca to which Muslims perform the pilgrimage and towards which all Muslim prayers are directed.

كعيب *kuʕeeb: ʔabu kʕeeb* mumps.

كعّابي kaʕʕaabi /adv/ on foot. *xadt-a-ha kaʕʕaabi* I went by shanks' pony.

كعّب kaʕʕab /vt/ **1** to cube (a number etc.). *mitr' mkaʕʕab* cubic metre. **2** to determine the cubic measurement of. *kaʕʕabu l-beet* they took the cubic measurement of the house. - vn *takʕiib*; ava/pva *mikaʕʕab*.

تكعيبة *takʕiiba* /n pl *-aat*/ trellis, espalier.

تكعيبي *takʕiibi* /adj/ cubic. *gizr' takʕiibi* cube root. ‖*fann' takʕiibi* Cubist art.

التكعيبيّة ʔit-takʕibiyya /n/ *[art]* Cubism.

مكعّب *mukaʕʕab, mikaʕʕab* **1** /adj/ cubic. **2** /n pl *-aat*/ cube.

اتكعّب ʔitkaʕʕab or ʔikkaʕʕab /vi/ passive of *kaʕʕab*. - iva *mitkaʕʕab*.

ك ع ب ر

كعبر kaʕbar (also *kaʕwar*) **1** /vt/ to wad, form into a shapeless lump. *kull' m-àktib waraqa ʔakaʕbar-ha w-ʔarmii-ha* every time I write a page I screw it up and throw it away. **2** /vi/ to grow podgy or dumpy. - vn *kaʕbara*; ava/pva *mikaʕbar*.

مكعبر *mikaʕbar* (also *mikaʕwar*) /adj */ bulging, bulbous, lumpy. *fakl-a-ha mkaʕbar* she has a dumpy figure. ‖*ʕaaʕid mikaʕbar* sitting all hunched up.

اتكعبر ʔitkaʕbar or ʔikkaʕbar (also ʔitkaʕwar, ʔikkaʕwar) /vi/ to be wadded, be formed into a lump. - iva *mitkaʕbar*.

ك ع ب ش

كعبش kaʕbiʃ /vt/ **1** to crumple, rumple. *ʔif-fanṭa kaʕbiʃit huduum-i* the suitcase crumpled my clothes. **2** to cramp (the fingers). - vn *kaʕbaʃa*; ava/pva *mikaʕbiʃ*.

اتكعبش ʔitkaʕbiʃ or ʔikkaʕbiʃ /vi/ **1** to become crumpled, become rumpled. **2** to become cramped (of fingers). - ava/iva *mitkaʕbiʃ*.

ك ع ب ل

كعبل kaʕbil /vt/ **1** to cause to stumble, trip. *ʔil-ħabl' kaʕbil-ni* the rope tripped me up. **2** to tangle. *xeeṭ mikaʕbil fi-baʕḍ-u* a tangled thread. - vn *kaʕbala*; ava/pva *mikaʕbil*.

اتكعبل ʔitkaʕbil or ʔikkaʕbil /vi/ **1** to stumble, trip. *min laxmit-u tkaʕbil fil-baab* because of his confusion he stumbled at the door. ‖*ʕaliil il-baxt yitkaʕbil fis-sideeri* (or *fi-bḍaan-u*) *[prov]* an unlucky man will trip over his waistcoat (or his balls). **2** to become entangled. - vn *kaʕbala*; ava *mitkaʕbil*.

ك ع ع

كعّ kaʕʕ *(u)* /vt/ to pay up, cough up, fork out. ‖*kaʕʕeet damm' ʕalb-i* or *kaʕʕeet ig-gild' wis-saʕt* I paid through the nose. - vn *kaʕʕ*; ava *kaaʕiʕ*.

اتكعّ ʔitkaʕʕ or ʔikkaʕʕ /vi/ passive of *kaʕʕ*. - iva *mitkaʕʕ*.

انكعّ ʔinkaʕʕ = ʔitkaʕʕ. - iva *minkaʕʕ*.

كعّع kaʕʕaʕ /vt/ to cause (s.o.) to pay out. *kaʕʕaʕt-u ʕaʃara gneeh* I made him cough up ten pounds. - vn *takʕiiʕ*; ava *mikaʕʕaʕ*.

اتكعّع ʔitkaʕʕaʕ or ʔikkaʕʕaʕ /vi/ to be caused to vomit. - iva *mitkaʕʕaʕ*.

ك ع ك

كعك *kaʕk↑ = kaħk*.

ك ع ك و

كعكو *kaʕku* /n/ style of serving in the game of *xara* (q.v.). - also *kaħku*.

ك ع ك و ع
كعكوعة *kaʕkuuʕa* /n pl *kaʕakiiʕ*/ knee (of a camel).

ك ع م ش
كعمش *kaʕmiʃ* /vt/ to crumple, rumple. *huduum mikaʕmiʃa* crumpled clothes. - vn *kaʕmaʃa*; ava/pva *mikaʕmiʃ*.
اتكعمش *ʔitkaʕmiʃ* or *ʔikkaʕmiʃ* /vi/ to become crumpled, become rumpled. - ava *mitkaʕmiʃ*.

ك ع و ر see ك ع ب ر: *kaʕwar, mikaʕwar, ʔitkaʕwar, ʔikkaʕwar*

[1] ك ف ء
كفاءة *kafaaʔaʰ* /n/ **1** competence. *xibrit-ha ʔaksabit-ha kafaaʔa fil-magal-da* her experience has given her competence in this field. **2** efficiency. *ʔil-kafaaʔa l-ʔintagiyya* efficiency of production. *ʔiṭ-ṭuub il-ʔaḥmar luu kafaaʔa ʕalya f-ʕazl il-ḥaraara* red brick is a highly efficient heat insulator.
كفء *kufʔ* /adj pl *ʔakfaaʔ*/ efficient, capable. *ḥaaga ʔakuun miʃ kufʔ[i] liiha* something I'm not up to doing.
أكفأ *ʔakfaʔ* /el/ more/most efficient or capable.
كافأ *kaafiʔ* /vt/ to reward. *kafiʔ-ni b-ʕalqa* he rewarded me with a beating. - vn *mikafʔa, mukafʔa*; ava *mikaafiʔ, mukaafiʔ*; pva *mukaafaʔ*.
مكافأة *mukafʔa* /n pl *-aat*/ reward, bonus. *mukafʔaat taʃgiʕiyya* incentive payments. ‖ *bi-yiʃtaɣalu b-mukafʔa* they work on a lump payment basis.
مكافئ *mukaafiʔ* /adj/ *[chem]* equivalent. *wazn[i] mukaafiʔ* equivalent weight.
تكافؤ *takaafuʔ* /n/ equivalence, evenness, parity. *mubaraah ma-f-haa-ʃ takaafuʔ* an unevenly matched football game. *takaafuʔ il-furaṣ* equal opportunities for all.

[2] ك ف ء see [2] ك ف ى

[1] ك ف ت
كفت *kuft* /n/ membrane between the white and the shell of an egg. ‖ *bi-yiʕraf ik-kuft* he knows everything, he's very clever. - *ʕaayiʃ ʕak-kuft* spending nothing on oneself, living on a shoestring.
كفّت *kaffit* /vt/ to inlay (with metal). - vn *takfiit*; ava/pva *mikaffit*.

[2] ك ف ت
كفتة *kufta* <T *köfte*> **1** /n/ dish of (spiced) minced meat, fish or chicken shaped into patties (or around a skewer) and cooked. **2** /adj invar/ worthless. *raagil kufta* a worthless man.

ك ف ت ر
كفتيريا *kafitirya, kafatirya* <Engl> /n pl *-aat*/ **1** cafeteria. **2** coffee-shop.

ك ف ح
كفاح *kifaaḥ* /n/ struggle, effort.
كافح *kaafiḥ* /vt/ to struggle against, combat. *mukafḥit il-ʔummiyya* illiteracy programme. - vn *mikafḥa, mukafḥa*; ava *mikaafiḥ*.
اتكافح *ʔitkaafiḥ* or *ʔikkaafiḥ* /vi/ passive of *kaafiḥ*. - iva *mitkaafiḥ*.

[1] ك ف ر
كفر *kafar[1], kifir, kufur (a)* /vi/ **1** to deny God's existence, blaspheme. ‖ *huwwa-ḥna kafarna lli skinna ʕandak* ≈ did we do something wrong in coming to stay with you? **2** to become fed up. *kafart[i] min if-fuxl* I became sick and tired of the work. ‖ *ʔil-ʕarabiyya kafarit* the car wore out. - vn *kufr*; ava *kafraan, kaafir*.
كفر *kufr* /n/ blasphemy. *ma-fii-ʃ baʕd ik-kufr[i] zamb [prov]* there is no sin worse than atheism.
كفران *kafraan* /adj */ exasperated.
كافر *kaafir* /n pl *kuffaar, kafara*/ unbeliever, infidel. ‖ *yiṣʕab ʕala l-kaafir* ≈ it would wring tears from a stone. - *ʔil-guuʕ kaafir [prov]* hunger knows no laws.
أكفر *ʔakfar* /el/ more/most blasphemous, sinful, etc.
كفّارة *kaffaara* /n/ *[Isl]* pious act in expiation or compensation for misdeeds. ‖ *yoom il-kaffaara [Jud]* Yom Kippur, Day of Atonement.
كفّر *kaffar* /vt/ **1** to cause to blaspheme, cause to deny God's existence. **2** to consider or judge to be a blasphemer or infidel. **3** to tire, weary, sicken. *di ʕiiʃa tkaffar* what a wretched life! *fiḍil yidayiq-ni lamma kaffar-ni* he kept on annoying me until I had it up to here. **4** to cause to do penance for, make atone for. ‖ *ḥ-akaffar sayyiʔaat-u* I'll give him hell! – /vi/ **5** to do penance, atone. *kaffart[a] ʕan zunuub-i* I did penance for my sins. - vn *takfiir*; ava/pva *mikaffar*.
تكفير *takfiir* /n/ **1** atonement, penance. **2** inquisition.
اتكفّر *ʔitkaffar* or *ʔikkaffar* /vi/ passive of *kaffar*. - iva *mitkaffar*.

[2] (ك ف ر)
كفر *kafr* /n pl *kufuur, kufúra*/ small village, hamlet. *kafr if-ʃeex* /prop n/ Kafr esh-Sheikh, a town and province in the Delta.
كفر *kafar[2]* <Engl *cover*> /n/ outer or inner bladder of

an inflatable football. *koora kafar* inflatable football.
كافور *kafuur* /n/ **1** eucalyptus tree(s) (Eucalyptus globulus). **2** camphor.

ك ف ر ت
كوفرتة *kufirta, kuvirta* <It *coperta*> /n pl *-aat*/ coverlet for a bed, bedspread. - also *kubirta*.

ك ف ر ي ه
كفريه *kufreeh* <Fr *coffret*> /n pl *-aat*/ *[elec]* terminal box.

ك ف ف ¹
كفّ *kaff¹ (i, u)* **1** /vt/ to restrain. *laazim tikiff ibn-ak ɛan mifaksit il-ʃawlaad* you ought to keep your son from picking fights with the other kids. ‖ *kaff' ʃiid-u ɛan* to wash one's hands of, as in *kaffeet ʃiid-i ɛan il-ħikaaya* I washed my hands of the matter. **2** /vi/ to refrain, abstain. *ʃaħsan-lak tikiff[a] ɛan it-tadxiin* you had better not smoke. - vn *kafafaan, kaff*; ava *kaafif*; pva *makfuuf*.
كفّ *kaff²* /n pl *kufuuf*/ **1** palm (of a hand). *ɖarab kaff[a] ɛala kaff* he clapped his hands (as a gesture of despair). ‖ *kaff-u maftuuħ* he's open-handed. - *ɛala kaff[a] ɛafriit* ≈ in a precarious situation. - *ʃal-ni ɛala kufuuf ir-raaħa* he treated me very well. - *zahra kaff is-sabɛ* motif used in tent appliqué work (see Pl.H, 26). **2** object resembling a palm in function or position: *kaff' migdaaf* oar blade. *kaff' muxtaaf* inner face of an anchor fluke. — /no pl/ **3** slap.
كفّة *kaffa¹* /n pl *-aat*/ **1** pan (of a balance scale). **2** block (of a bicycle pedal).
كافّة *kaffit* /n in constr/ all of. *kaffit in-naas* all the people.
كفيف *kafiif* /adj pl *kufafa*/ blind.
مكفوف *makfuuf* /adj */ = *kafiif*.
انكفّ *ʃinkaff* /vi/ **1** to be restrained. **2** (impersonal) passive of *kaff¹* 2. *mawɖuuɛ yinkaff[a] ɛannu* something one should stay away from. - iva/ava *minkaff*.
اتكفّ *ʃitkaff¹* or *ʃikkaff¹* = *ʃinkaff*. - iva/ava *mitkaff*.

ك ف ف ²
كفّ *kaff³ (i)* /vt/ to hem(stitch) (a garment). - vn *kifaafa*; ava *kaafif*; pva *makfuuf*.
كفافة *kifaafa* /n/ hemming, hemstitching.
اتكفّ *ʃitkaff²* or *ʃikkaff²* /vi/ to be hemmed, be hemstitched. - iva *mitkaff*.
كفّف *kaffif* /vt/ to hem(stitch) (a garment). - vn *takfiif*; ava/pva *mikaffif*.
اتكفّف *ʃitkaffif* or *ʃikkaffif* /vi/ to be hemmed, be hemstitched. - iva *mitkaffif*.

ك ف ل
كفل *kafal¹ ↑ (i)* /vt/ **1** to look after, be responsible for. *kafalu l-ɛayyil* they took responsibility for the child. **2** to guarantee, ensure. *ʃil-qanuun bi-yikfil-lu l-ħaqq* the law guarantees him the right. - vn *kafalaan, kafaala*; ava *kaafil*; pva *makfuul*.
كفل *kafal²* /n pl *kufuul, ʃakfaal*/ **1** rump (of a beast of burden). **2** hips.
كفالة *kafaala* /n/ *[leg]* bail.
كفولة *kafuula* /n pl *kawafiil*/ piece of cloth used as a baby's napkin.
كفيل *kafiil* **1** /adj/ apt, liable. *ʃil-ɛamla di kafiila b-ʃinnaha twaddii-k is-sign* this act (of yours) is liable to land you in prison. **2** /n * and pl *kafala*/ guarantor.
اتكفل *ʃitkafal* or *ʃikkafal* /vi/ passive of *kafal¹*. - iva *mitkifil*.
كفّل *kaffil* /vt/ to make responsible, put in charge. *kaffil-ni bir-radd[a] ɛat-tilifoon* he assigned me to answer the phone. - vn *takfiil*; ava/pva *mikaffil*.
اتكفّل *ʃitkaffil* or *ʃikkaffil* /vi/ **1** to be ensured, be guaranteed. **2** to be made responsible, be put in charge. **3** to assume responsibility. - ava/iva *mitkaffil*.

ك ف ل ل
كفالّو *kafallu* <It *cavallo*> /n/ inside leg measurement.

ك ف ل ي ه
كافيليه *kavileeh* <Fr *clavier*> /n pl *-aat*/ piano keyboard.

ك ف ن
كفن *kafan* /n pl *ʃakfaan*/ shroud, winding sheet. *yiigi maɛa l-laban yiruuħ maɛa l-kafan [prov]* ≈ from birth to death, life is but a passing show.
كفّن *kaffin* /vt/ to enshroud, wrap in a winding sheet. *ɤassilna l-marħuum wi-kaffinnaa* we washed the deceased and wrapped him in a shroud. - vn *takfiin*; ava *mikaffin*.
مكفّناتي *mikaffinaati* /n pl *-yya*/ *[obsol]* undertaker.
اتكفّن *ʃitkaffin* or *ʃikkaffin* /vi/ passive of *kaffin*. - iva *mitkaffin*.

ك ف ي ¹
كفى *kafa¹ (i)* /vt/ **1** to suffice, be sufficient for. *ʃil-ʃakl' ma-yikfi-naa-ʃ kull-i-na* there is not enough food for all of us. *ma-kafa-k-ʃ illi ʃuft-u* haven't you been through enough? *ma-dda-nii-ʃ maɛlumaat kafya* he didn't give me enough information. **2** to shield from, protect from (of God). *rabb-i-na yikfii-na ʃarr il-balaawi* (may the Lord protect us from the evil of afflictions) ≈ God help

us! ‖ *kaf-alla f-farr* ≈ God forbid, God protect us! *kaafi xeer-u farr-u* indifferent, neither good nor bad, as in *waaqif kaafi xeer-u farr-u* just standing there minding his own business. - vn *kifaaya*; ava *kaafi*.

كفاية *kifaaya* **1** /n/ sufficiency, a sufficient amount. *kull[i] maħall[i] yaaxud kifayt-u min il-biḍaaɛa* each store takes enough of the merchandise to meet its needs. *ʕaẓunn ana ɑult[i] kfaaya* I think I've said enough. ‖ *xad kifayt(-u)* to get satisfaction, have one's fill, as in *ɑaɛad yixiiẓ il-ʕawlaad lamma xad kifayt-u* he teased the children to his heart's content. **2** /interj/ enough! *kifaaya d-dawʃa di* that's enough of this racket! **3** /adj invar/ sufficient. *ma-gabuu-ʃ ʕakl[i] kfaaya* they didn't bring enough food.

كفّى *kaffa*[2] **1** /vi/ to suffice. *ʕil-gineeh ma-ɛad-ʃ[i] bi-ykaffi b-ħaaga* a pound doesn't buy much these days. ‖ *ʕana mkaffi ɛal-wilaad bit-tiila* I can hardly provide for my children. **2** /vt/ to be sufficient for, satisfy. *ʕil-kimmiyya di ħa-tkaffii-k baɑa* will this amount be enough for you then? *ʕilli fiina mkaffii-na* we've got quite enough on our minds as it is. - vn *takfiyya*; ava *mikaffi*.

اكتفى *ʕiktafa*[1] **1** /vi/ to content oneself, be satisfied. *ʕiktafeet bi-kubbaayit faay* I made do with a glass of tea. ‖ *ʕil-ʕiktifaa ʕiz-ẓaati* self-sufficiency. **2** /vt/ to be spared (s.th.), be protected against. *ʕuɻlub li-gaar-ak il-xeer - ʕin ma-nilt[i] minnu tiktifi farr-u [prov]* wish your neighbour well; then if he doesn't help you at least he won't harm you. - vn *ʕiktifa, ʕiktifaaʕ*; ava *miktifi*.

استكفى *ʕistakfa* /vi/ to have one's fill, have enough. *ɛiyaal-u mistakfiyyiin min kull-u* his children have enough of everything. - vn *ʕistikfa*; ava *mistakfi*.

ك ف ى [2]

كفا *kafa*[2] *(i)* /vt/ **1** to turn upside-down. ‖ *ʕikfi ɛal-xabar maguur* (invert a kneading crock over the news) ≈ keep it under your hat. - *makfi ɛala gbiin-u* resting his forehead on his arm. - *makfi ɛala ɛeen-u* stupid, dumb. - *ʕikfi ʔ-ɑidra ɛala fumm-a-ha tiɻlaɛ il-bint[i] l-ʕumm-a-ha [prov]* ≈ like mother, like daughter. **2** to make fall, bring down. *law ma-skitt[i]-f ħ-akfii-k ɛala buuz-ak* if you don't shut up I'll send you sprawling on your ugly mug! - vn *kafy, kafya, kafayaan*; ava *kaafi*; pva *makfi*.

كافية *kafya* /n/ disaster, catastrophe. *ʕif-furb[i] gab-lu k-kafya* drinking brought him to ruin.

اتكفى *ʕitkafa* or *ʕikkafa* /vi/ **1** to be turned upside-down. **2** to fall down. *ʕikkafeet ɛala wiff-i* I fell flat on my face. - ava/iva *mitkifi*.

انكفى *ʕinkafa* = *ʕitkafa*. - ava/iva *minkifi*.

ك ف ى [3] see **ك و ف**: *kufiyya*

ك ف ى ر

كوفير *kufeer* <Fr *couvert*> /n/ **1** place setting. **2** service charge.

ك ك ا و

ككاو *kakaaw* <Fr *cacao*> /n/ cocoa. ‖ *ẓibdit kakaaw* lip-salve.

ك ك ت ى ل

كوكتيل *kuktiil, kukteel* <Engl> /n pl *-aat*/ cocktail.

ك ك ك ا see **ك ا ك ا**: *kakkaa*

ك ك ك و ك

كوكوكوكو *kukukuuku* /interj/ cock-a-doodle-doo!

ك ك ك و ل ا see **ك ك و ل ا**: *kukakuula*

(ك ك و ل)

كاكولة *kakuula*[1] /n pl *-aat, kawakiil*/ long straight overcoat with buttons down the front and half-collar (usually worn by members of the Muslim religious professions, see Pl.F, 15).

كاكولا *kakoola, kakuula*[2] (also *kukakuula*) <trade n> /n/ Coca Cola.

ك ك ى

كاكا *kaaka, kaaka*[2] *(i)* /vi/ to cackle, cluck (of chickens). ‖ *ħ-aɑrab-u lamma ʕaxallii yikaaki* I'll beat him until I make him gibber. - vn *mikakiyya*; ava *mikaaki, mikaaki*.

كاكا *kaaka*[3] /n/ *[children]* chicken.

ك ك ى ى ن see **[1] ك ى ن**: *kukayiin*

ك ل ا ر see **ك ر ا ر**: *kalaar*

ك ل ا ط

كلاطة *kulaaṭa, kalaaṭa* <It *culatta*> /n/ *[butcher]* rump.

ك ل ا ل

كلالة *kilaala* <prob Copt> /n pl *-aat*/ wooden strut to which a pot on a water-wheel is attached (see Pl.E, 13).

ك ل ب

كلب *kalab[1] (i)* /vt/ to infect with rabies. *ɛaɑɑ-u kalb[i] ṣaɛraan kalab-u* a rabid dog bit him and gave him

rabies. ‖*kalb' yiklib-u* to hell with him! - vn *kalabaan*; ava *kaalib*; pva *makluub*.
كلب *kalib, kalab*[2] (also *daaʃ il-kalib*) /n/ rabies.
كلب *kalb* /n pl *kilaab*/ **1** dog. ‖*kalb il-baḥr* seal. - *ʃibn' kalb* (1) *[abus]* bastard, son of a bitch. (2) /appositive with masc n referent, *bint' kalb* with fem n referent/ ≈ terrific, as in *xaṭabt' ḥittit xuṭba bint' kalb* I gave a terrific speech. - *ya gins' kalb* you dog! - *kalb[a] ḥayy' wala sabɛ' mayyit [prov]* (a live dog rather than a dead lion) ≈ a bird in the hand is worth two in the bush. - *ʃin kan-lak ɛand il-kalb[a] ḥaaga qul-lu ya siid-i [prov]* ≈ endure any humiliation to get what you want. - *ɛumr' deel il-kalb' ma-yinɛidil [prov]* ≈ a leopard doesn't change his spots. - *ʃik-kalb' ma-yɛuḍḍ'-ʃ fi-widn' ʃaxuu [prov]* ≈ crows will not pick out crows' eyes. **2** jaw (of a clamp or the like). **3** piece, man (in the game of *siiga*).
كلبة *kalba* /n pl *-aat*/ **1** female dog, bitch. ‖*baaliɛ kalba* always yapping. **2** link (of a chain). **3** jig fixture.
كلبان *kalbaan* /adj/ rabid, mad (of a dog).
كلابي *kilaabi* /adj/ canine.
كلّابة *kullaaba* /n pl *-aat*/ **1** pair of pliers. **2** pair of extraction forceps.
اتكلب *ʃitkalab* or *ʃikkalab* /vi/ to be infected with rabies. - iva *mitkilib*.
انكلب *ʃinkalab* = *ʃitkalab*. - iva *minkilib*.

ك ل ب ب

كلوبّ *kulubb* <Engl *globe*> /n pl *-aat*/ mantle-lamp.
كلوبّاتي *kulubbaati* /n pl *-yya*/ *[obsol]* one who sells, mends or tends mantle-lamps.

ك ل ب س

كلبس *kilibs* <Engl *clip*> /n pl *-aat*/ fastening device which clips or grasps. *kilibs' lif-faɛr* hairpin. *kilibs' waraq* paper clip. *ḥalaq kilibs* clip-on earrings.

ك ل ب س -

كولبسطي *kulbasṭi* <T *külbastı*> /n/ a dish consisting of poultry, game, or meat either grilled or fried gently in very little fat. *ʃaraanib kulbasṭi* rabbit sauté.

ك ل ب ش

كلبش *kalabʃ* <T *kelepçe*> /n pl-*aat*/ handcuff. *ḥaṭṭuu fik-kalabʃ* (or *fik-kalabʃaat*) they put him in handcuffs, they took him off to jail.
كلبش *kalbiʃ* /vt/ **1** to grip and hold immovable. *ʃir-rumatizm' kalbiʃ rukab-i* rheumatism made my knees too stiff to move. – /vi/ **2** to grab, hold, fasten on. *ʃil-muxṭaaf lamma yitrimi ykalbiʃ fil-ʃarq* when the anchor is tossed it catches on the bottom. **3** to knot up, cramp. *lamma ʃaakul simiin baṭn-i tkalbiʃ* when I eat greasy food my stomach gets cramp. - vn *kalbaʃa*; ava *mikalbiʃ*.
اتكلبش *ʃitkalbiʃ* or *ʃikkalbiʃ* /vi/ to be or become clenched or clamped together. *gism-u yxaffib wi-ḍabbit-u titkalbiʃ* his body becomes rigid and his jaw clenches. - ava *mitkalbiʃ*.

ك ل ب ظ

كلبظ *kalbaẓ* /vi/ to become plump. - vn *kalbaẓa*; ava *mikalbaẓ*.
كلبوظ *kalbuuẓ* /adj pl *kalabiiẓ*/ plump, chubby. *ya kalbuuẓ ya mkalbaẓ* hey, fatso!
اتكلبظ *ʃitkalbaẓ* or *ʃikkalbaẓ* = *kalbaẓ*. - ava *mitkalbaẓ*.

ك ل ب و ش

كلبوش *kalabooʃ* <perh Sp *calabozo* jail> /n/ *[joc]* handcuff.

ك ل ت ت)

كلوتّ *kulutt* <Fr *culotte*> /n pl *-aat*/ men's or women's or children's underpants. *kulutt' naylun* plastic pants.
كالوتّة *kalutta* <It *calotta*> /n pl *-aat*/ skullcap.

ك ل ت ش

كلاتس *kalatʃ* <Engl> /n pl *-aat*/ *[auto]* clutch.

[1] ك ل ح

كلح *kiliḥ'* *(a)* /vi/ to fade (of colour). ‖*ʃiklaḥ baqa* you ought to be ashamed of yourself! - *wiff' kaaliḥ* (1) a scowling face. (2) one who brings misfortune. - vn *kalḥ, kalaḥaan*; ava *kalḥaan, kaaliḥ*.
كلح *kalaḥ* *(a)* /vt/ to cause to fade. ‖*kalaḥnaa min ɛandina* we got rid of him. - vn *kalḥ, kalaḥaan*; ava *kaaliḥ*; pva *makluuḥ*.
كلح *kiliḥ*[2] /adj */ insensitive, thick-skinned, cheeky.
أكلح *ʃaklaḥ* /el/ more/most insensitive etc.
اتكلح *ʃitkalaḥ* or *ʃikkalaḥ* /vi/ **1** to fade away, vanish, disappear. **2** to be made to fade. - ava/iva *mitkiliḥ*.
انكلح *ʃinkalaḥ* = *ʃitkalaḥ*. - ava/iva *minkiliḥ*.
استكلح *ʃistaklaḥ* /vi/ to display cheekiness. - ava *mistaklaḥ*.

[2] ك ل ح

كالوح *kaluuḥ* /n pl *kawaaliḥ*/ corn cob. - also *qaluuḥ*.

ك ل د ى ن
كلودين *kuludiin* <Fr *claudine*>: *kool kuludiin* see *kool*.

ك ل ر ا see ك ل ى ر ا: *kulira*

- ك ل ر ن
كلارنيت *kalarneet, kilarinett* <Engl> /n/ clarinet.

ك ل ر ى ا
كلوريا *kulurya* /n/ a small hard cake.

ك ل ر ى د
كلوريد *kuluriid* <Fr> /n/ chloride.

- ك ل س ت
كلستومة *kilistooma*↓ /n/ *[obsol]* ankylostomiasis clinic.

- ك ل س ك
كيلوسيكل *kilusikl* <Fr> /n/ kilocycle.
كيلوسايكل *kilusaykil* <Engl> /n/ kilocycle.

ك ل س و ن
كلسون *kalsoon, kalsuun* <Fr *caleçon*> /n pl *-aat, kalasiin*/ men's long or short underpants.

ك ل س ى ر
كلاسير *kilaseer* <Fr *classeur*> /n pl *-aat*/ loose-leaf file, ring-book.

ك ل س ى ك
كلاسيكى *kilasiiki* <Fr *classique*> /adj/ classical. *musiiqa klasikiyya* classical music.

- ك ل س ى
كلسيوم *kalsiyum* <Fr> /n/ calcium.

- ك ل ش ن see ك ل ل [3]: *kullifinkaan*

ك ل ش ى ه
كليشيه *kilifeeh* <Fr *cliché*> /n pl *-aat*/ **1** cliché, hackneyed phrase. **2** *[print]* cliché. - also *ʕaklafeeh*.

ك ل ص see ك ل ل ا ص: *kullaaṣ*

ك ل ض م
كلضم *kalḍam* /vi/ **1** to become sulky, pout. **2** to become chubby or heavy-jowled. - vn *kalḍama*; ava *mikalḍam*.
اتكلضم *ʕitkalḍam* or *ʕikkalḍam* /vi/ (impersonal) passive of *kalḍam*. *ʕitkalḍam laha* she was given the cold shoulder. - iva *mitkalḍam*.

ك ل ط see ك ل ا ط: *kulaaṭa, kalaaṭa*

ك ل ف [1]
كلفة *kulfa* /n/ **1** expenditure. **2** trouble, fuss (put on for guests). – /pl *kulaf*/ **3** trimming, garniture (of a dress, shirt etc.).
كلاف *kallaaf* /n */ *[rur]* stable-man (responsible for feeding livestock).
كلف *kallif*[1] /vt/ **1** to go to the expense of. *kallif ʕaleeha xamsa gneeh* he forked out five pounds for it. **2a** to put to expense. *bi-ykallifuu-ni ktiir* they put me to a lot of expense. *ħa-ykallif-ak talaata gneeh* it will cost you three pounds. *ʔadd*[i] *ma* (or *zayy*[i] *ma) ykallif* whatever it costs, whatever the cost. **2b** to put to great trouble (particularly in hospitality). *min ʕeer takliif* there is no need to stand on ceremony. *ʕiħna miʃ quyuuf ma-fii-ʃ luzuum tikallif nafs-ak kida* we're (friends) not guests, you don't have to go to so much trouble. *kallifit xaṭir-ha w-gabit-li t-tazkara* she went to the trouble of getting me the ticket. **3** to charge, entrust. *kallif-ni bil-maħall* he put me in charge of the shop. ‖ *ʕamr*[i] *takliif [acad]* obligation of graduates in certain subjects to work for a period in public service. **4** to trim (a garment). *kallifit ig-gallabiyya b-ʔiṭaan ħariir* she trimmed the galabiya with silk piping. - vn *takliif*; ava *mikallif*; pva *mukallaf*↑.
تكليف *takliif* /n pl *takaliif*/ **1a** expenditure, outlay. **1b** expense, cost. **2** *[leg]* **2a** responsibility for paying taxes on land. **2b** terrier, land register.
تكلفة *taklifa* /n/ **1**↑ expense. **2** basic cost. *bi-siʕr it-taklifa* at cost price.
مكلفة *mukallafa* /n pl *-aat*/ terrier, land register.
اتكلف *ʕitkallif* or *ʕikkallif* /vi/ **1** passive of *kallif*. **2** to cost. *dirast-ak itkallifit ʕalf*[i] *gneeh* your studies cost a thousand pounds. - ava/iva *mitkallif*.
تكلف *takalluf*↑ /n/ pretentiousness, affectedness.
متكلف *mitkallif* /adj/ fancy, elaborate.
متكلف *mutakallif*↑ /adj */ pretentious, affected.
استكلف *ʕistaklif* /vt/ to consider too troublesome. *ʕistaklifit titawlit nafs-a-ha* she thought it was too much trouble to put on make-up. - ava/pva *mistaklif*.

ك ل ف [2]
كلف *kalaf*↑ /coll n/ freckle(s).
كلف *kallif*[2] /vi/ to break out in freckles. - ava *mikallif*.

ك ل ف ت
كلفتي *kilifti* <Engl *clifty*, cf also Gr *klephtês*> /adj invar/ *[joc]* crooked, dishonest.
كلفت *kalfit* /vt/ **1** to deal with (s.o. or s.th.) hastily and in slapdash fashion. *ʏaawi ykalfit fuʏl-u* he's given to hasty slapdash working. *kalfitt il-mudiir wi-maqqeet-u ɛala ʔagazt-i* I bustled the director into signing (approval) for my holiday. **2** to bundle up, wrap up. *kalfit il-huduum wi-hat-haa-li* bundle up the clothes and bring them to me! *kalfit nafs-ak mil-bard* wrap yourself up against the cold. - vn *kalfata*; ava/pva *mikalfit*.
مكلفتاتي *mikalfitaati* /n pl *-yya*/ slapdash worker.
اتكلفت *ʔitkalfit* or *ʔikkalfit* /vi/ passive of *kalfit*. - vn *tikalfiit*; ava *mitkalfit*.

ك ل ك
كلك *kalk* <Fr *calque*>: *waraq kalk* tracing paper.

ك ل ك ت ت
كلاكيت *kilakitt, kalakitt* <Fr *claquette*> /n/ *[cin]* clapper board, clap-stick.

ك ل ك س
كلكس *kalaks, kilaks* <Fr *klaxon*> /n pl *-aat*/ *[auto]* horn. *ʔiddii-lu klaks* give him a toot on the horn.

ك ل ك ع
كلكع *kalkaɛ* /vi/ to become lumpy, form a lump. *ʔid-damm' kalkaɛ* the blood clotted. - vn *kalkaɛa*; ava *mikalkaɛ*.
مكلكع *mikalkaɛ* /adj */ lumpy. *ħaaga mkalkaɛa fil-bizz if-fimaal* something lumpy in the left breast.
كلكوعة *kalkuuɛa* /n pl *kalakiiɛ*/ lump, clot.
كلكيعة *kulkeeɛa* /n pl *kalakiiɛ*/ lump, clot.
اتكلكع *ʔitkalkaɛ* or *ʔikkalkaɛ* = *kalkaɛ*. - ava *mitkalkaɛ*.

ك ل ك ل
كلكل *kalkil* /vi/ to become lumpy. - vn *kalkala*; ava *mikalkil*.
اتكلكل *ʔitkalkil* or *ʔikkalkil* = *kalkil*. - vn *tikalkiil*; ava *mitkalkil*.

ك ل ك ل -
كلوكلوه *kulukluuh* <Fr *clou-clou*> /n/ ice-cream cone sealed with a hard chocolate topping.

ك ل ك و ز
كلوكوز *kulukooz, kuluukooz* <Fr> /n/ glucose.

ك ل ل ١
إكليل *ʔikliil* /n pl *ʔakaliil*/ **1** wreath or crown, particularly as worn by the bride and groom during an Orthodox wedding ceremony. **2** Orthodox wedding ceremony. ‖ *ɛaqd' ʔikliil* marriage certificate, marriage contract. - *nuṣṣ' ʔikliil* formal engagement service conducted by a priest.
كلّل *kallil* /vt/ **1** to crown. **2** *[Chr]* to perform the marriage ceremony for, marry (of a priest). - vn *takliil*; ava *mikallil*.
اتكلّل *ʔitkallil* or *ʔikkallil* /vi/ **1** to be crowned. *muħawlaat-u tkallilit bin-nagaaħ* his efforts were crowned with success. **2** *[Chr]* to get married. - ava/iva *mitkallil*.

ك ل ل ٢
كلّ *kall (i)* /vi/ **1** to become blunt. **2** to become jaded. *kalleet min kutr if-fuʏl* I became jaded with overwork. - vn *kalal, kalalaan*; ava *kaalil*.
كليل *kaliil* /adj */ weak, feeble. *kaliil il-baṣar* weak-sighted.

ك ل ل ٣
كلّ *kull* /n/ **1** whole, totality, entirety. *da l-beet kull-u* that's the whole of the house. *ʔid-dawʃa di kull-a-ha* all this noise. *ʔil-kull' b-yistaɛidd' lil-yoom da* everyone's getting ready for that day. *kull if-fuqaq mafruuʃa* all the flats are furnished. *dulaab kibiir kull-u sakakiin* a big cupboard full of knives. *kull-ak xeer* you are all kindness. *kull-ak naẓar* ≈ I leave it to your discretion. *kull' ma fil-ʔamr inn* all it amounts to is that ..., as in *kull' ma fil-ʔamr innu ṣaħb-u fa-raqqaa* he's his friend, so he promoted him - that's all there is to it. ‖ *ʔumm" kalsuum kull-a-ha raaħit* Umm Kalthum herself went. - *bitaaɛ kull-u* (1) jack of all trades. (2) know-all. - *kull-a-ha farkit kaɛb* it's no more than a stone's throw. - *kull-a-ha fahr' fahreen* it's just a matter of a month or two. - *kull-i-na laha* death comes to us all. - *sitt il-kull* a jewel among women. - *da-nta l-kull' fil-kull* ≈ everything depends on you. - *wi-kull-u* and all that, and what not, as in *baɛd' ma kalna w-kull-u ruħna s-sinima* after we'd eaten and everything, we went to the cinema. - *kull-u ʔilla* anything but, as in *kull-u ʔilla kida* everything but that. - *ɛala kullin* or *maɛa kullin* or *maɛa kull' zaalik* anyhow, as in *ɛala kullin ʔana mif qalqaan* anyway, I'm not worried. **2** /w foll indef noun/ every, each. *kull' yoom* every day. *kull' ʃwayya* every so often. *kull' waaħid fiikum* each one of you. *ɛala kull" ħaal* in any case. ‖ *bi-kull' diqqa* very precisely. - *bi-kull' mamnuniyya* with the greatest of pleasure.

¶ *kull' ma* /conj/ whenever. *kull' ma yibɛat ʃakwa ʃabɛat ʃarbaɛa* whenever he lodges a complaint I lodge four. — *kull' ma ... (kull' ma)* /correl conj/ the more ... (the more). *kull' ma kaan it-taraddud ɛaali kull' ma kaanit il-mooga qṣayyara* the higher the frequency the shorter the wave. *kull' ma yikbar il-mas ʃuliyya ḥa-txiff' min ɛalee* as he gets older his responsibility will lessen.

كلّيت *kulleet = kull* 1.

كلّات *kullaat [non-Cairene] = kull* 1.

كلّي *kulli* /adj/ total. *bing' kulli* general anaesthetic.

كلّية *kulliyya* /n pl *-aat*/ college, faculty (of a university). *kulliyyit iṭ-ṭibb* the Faculty of Medicine.

¶ *kulliyyatan* /adv/ completely.

كلّشنكان *kullifinkaan* /adv/ haphazardly, carelessly. *ma-fii-ʃ waqt - laazim nixallaṣ-ha kullifinkaan* there's no time, we have to finish it any way we can.

كليلة *kaliila: ʃil-kull' kaliila* one and all, every (last) one, as in *xaduu-hum il-kull' kaliila* they took them one and all. *yilɛan ʃabuu-ku l-kull' kaliila* God damn you all!

ك ل ل [4]

كلّة *kulla* <It *colla*> /n/ paste, glue. *malzuuq bi-kulla ɛala l-xaʃab* stuck onto the wood with glue.

ك ل ل [5] see ك ل ا ل : *kalaala*

ك ل ل ا ص

كلّاص *kullaaṣ* <Copt> /n/ a kind of *ziir* (q.v.).

ك ل ل و

كالّو *kallu* <It *callo*> /pl n/ corns (on the foot).

ك ل م [1]

كلمة *kilma* /n pl *-aat, kalimaat*/ **1** word. *kilma kilma* word for word. *ʃil-kilmiteen dool ʃassaru fiyya* those few words affected me. *bi-titɛarraf bil-kilma di* it is defined by this term. *ma-qal-ʃ' wala nuṣṣ' kilma* he didn't utter a single word. ‖ *ʃibn' kilma* a man easily swayed, a gullible person. - *ʃil-kilma ɛaleeha* she is spoken for (in marriage). - *kilmit-u waḥda* (1) he's a man of his word. (2) he sticks to one price (you can't bargain with him). - *kilma kida walla kida* offensive talk. - *baɛd' kilma minni w-kilma minhum* after a lot of debate between us. - *(hiyya) kilma w-radd' ʏaṭaa-ha* keep it short! give a brief answer! - *raagil luh kilma* (1) a man of his word. (2) a man of authority. - *raagil ma-luu-ʃ kilma* a man whose word cannot be trusted. - *kilma tgiib-u w-kilma twaddii* he's easily led. **2** phrase, utterance. *kilma maʃhuura* a famous saying. ‖ *ma-tʃaaxiz-nii-ʃ fi-di l-kilma* forgive me for saying this. **3** address, talk. *kilma ʃiftitaḥiyya* opening address.

كلام *kalaam* /n/ **1** speech, talk, words. *da* (or *ʃahu*) *kalaam* that's (just) talk! *ʃil-kalaam fil-ḥubb' miʃ kifaaya* talking about love is not enough. *ʃil-kalaam sahl innama l-fiɛl' ṣaɛb [prov]* easier said than done. *miʃi la kalaam wala ḥadiit* he left without a word. *hiyya di ɛayza kalaam* does this really need discussion? it goes without saying. *ɛand' miin ik-kalaam da* says who? ‖ *kalaam-ak* your bid! (in card games). - *raagil ɛalee kalaam* a man of dubious reputation. - *ʃil-kalaam ɛaleeha* she is spoken for. - *bi-yiṭlaɛ ɛalee kalaam* people say things about him. - *ma-fii-ʃ kalaam* it goes without saying. *da kalaam garaayid* newspaper talk (i.e. not to be believed)! - *ʃana gay-lak fik-kalaam* I'm coming to that. - *maʃʃa kalaam-u* he had his way. - *huwwa ɛand' kalaam-u* he is keeping his word. - *simiɛ ik-kalaam* to do as one is told, as in *ma tismaɛ kalaam baaba* do as daddy says! - *yibiiɛ bi-kalaam waaḥid* he sells at fixed prices. - *kalaam il-leel madhuun bi-zibda lamma yiṭlaɛ ɛalee n-nahaar yisiiḥ [prov]* (evening words are buttered; when the sun rises they melt away) ≈ evening words are not like those of morning. **2** state of affairs, condition. *ʃizzayy ik-kalaam da* how could that be? *min ʃimta k-kalam-da* when did that happen? *ʃil-kalaam da kaan zamaan* all that was a long time ago. *da kalaam taani* that's another matter! that's a horse of a different colour! ‖ *da miʃ kalaam* that's not possible! that's nonsense! - *baqa da kalaam da* now, really, does that make any sense, can you really accept such a state of affairs? *ʃayy' kalaam* (1) nonsense, piffle, as in *da kalaam ʃayy' kalaam* that's just a lot of rubbish. (2) any old way, sloppily, as in *da b-yilbis ʃayy' kalaam* his dress is careless and sloppy, *ʃin-naggaar ɛamal ik-karaasi ʃayy' kalaam* the carpenter knocked those chairs together any old how. - *wi-kalaam min da* or *wi-kalaam zayy' kida* and that sort of thing, and so on and so forth, as in *ma-bi-traɛii-ʃ ʃawlad-ha w-kalaam zayy' kida* she doesn't take care of her children and stuff like that. **3** (also *ɛilm ik-kalaam*) *[Isl]* Islamic theology.

كلمنجي *kalamangi* /n pl *-yya*/ big talker, chatterbox, loudmouth.

مكلمة *maklama* /n/ *[deris]* any place used for idle chatter. *ʃintu ḥa-tiɛmilu l-maktab maklama* are you going to make the office into a place for idle talk?

مكالمة *mukalma* /n pl *-aat*/ telephone call.

مكلماني *muklimaani* /n pl *-yya*/ = *kalamangi*.

مكلمنجي *maklamangi* /n pl *-yya*/ = *kalamangi*.

كلّم *kallim* /vt/ to speak to, address. *ma-tkallim-nii-ſ bis-siim* don't speak to me in riddles. *kunt' b-akallim-u fil-ḥubb* I was speaking to him about love. ‖*bi-txallii yimſi ykallim nafs-u* she drives him out of his mind. - vn *takliim*; ava *mikallim*.
¶ *kallim* /fem *kallimi*, pl *kallimu*/ you're wanted, someone wants (to talk to) you. *kallim it-tilifoon* you're wanted on the phone. *kallim barra* you're wanted outside.
اتكلّم *ſitkallim* or *ſikkallim* **1** /vi/ to speak, talk. *di masaaſil ſil-waaḥid ma-yitkallim-f' fiiha* these are matters that shouldn't be discussed. *bi-titkallimu fi-* (or *ɛan* or *ɛala) ſeeh* what are you talking about? *ſinta b-titkallim izzaay* what the hell are you talking about? *kunt' b-atkallim fit-tilifoon* I was talking on the telephone. ‖*ḥadd itkallim* has anyone called (on the phone)? - *ſitkallim ɛaleeha* he asked for her hand in marriage. **2** /vt/ to speak (a language). *bi-titkallim kaam luɣa* how many languages do you speak? - vn *takallum*; ava *mitkallim*.
متكلّم *mutakallim* /n */ speaker.

[2] ك ل م see ك ل ى م : *kiliim*

ك ل م ت ر
كيلومتر *kilumitr* <Fr *kilomètre*> /n pl *-aat*/ kilometre. كيلومترى *kilumitri* /adj/ kilometric. *ſiftiraak kilumitri* train ticket calculated on a basis of distance.

ك ل م ت - ر
كيلومتراج *kilumitraaj* <Fr> /n/ mileage.

ك ل ن see ك ل ى ن : *kuliin*

ك ل ن ج ى see [1] ك ل و ن : *kalungi, kalungiyya*

ك ل ن ى ا
كلنيا *kulunya* <It *colonia*> /n pl *-aat*/ cologne.

ك ل ن ى ه
كلونيه *kaloneeh* <perh Fr *galonné*> /n pl *-aat*/ *[needlew]* tuck.

ك ل و
كلوة *kilwa* /n pl *-aat, kalaawi*/ **1** kidney (as food). *beet il-kalaawi* (meat from) the area round the kidneys. **2** /pl *-aat* only/ kidney (as an organ of the body). ‖*kilwit il-ſiid* ball of the thumb.
كلية *kilya* /pl *-aat, kila/ [anat]* kidney.
كلوى *kalawi* /adj/ **1** pertaining to the kidneys, renal. *maɣaṣ kalawi* renal colic. **2** kidney-shaped.

ك ل و ت
كلوت *kuluut: kuluut beeh* Clot Bey Street in Cairo, once famous for its red-light district.

ك ل و ر
كلور *kuloor* <Fr *chlore*> /n/ chlorine.

ك ل و ش
كلوش *kuloof* <Fr *cloche*> /adj invar/ wide, full (of a garment or its part). *fustaan kuloof* a full-skirted dress.

[1] ك ل و ن
كالون *kaluun, kaloon* /n pl *kawaliin, kalunaat*/ door lock. *mafatiiḥ lil-kawaliin* keys for the locks.
كالونجى *kalungi* /n pl *-yya*/ locksmith.
كوالينجى *kawalingi* /n pl *-yya*/ locksmith.

[2] (ك ل و ن)
كلون *kuloon* <Fr *collant*> /n pl *-aat*/ tights.
كلونة *kuloona* <It *colonna*> /n/ acrobatic feat in which three men balancing on each other's shoulders support a fourth who performs tricks.

ك ل ى see ك ل و : *kilya*

ك ل ى ر ا
كوليرا *koleera* (also *kulira*) <It> /n/ cholera. - also *koreera*.

ك ل ى م
كليم *kiliim* <T *kilim*> /n pl *-aat, kilíma*/ woven rug. *kiliim mixaṭṭaṭ ɛal-mabrad* a diagonally-striped rug.

ك ل ى ن
كولين *kuliin* <Fr> /n/ kaolin.

ك م
كام *kaam, kam* **1** /interrog quantifier/ how many? how much? *ſistanneet kaam saaɛa* how many hours did you wait? *kaam sitt' kida zayy-ik* how many women are like you? *ḥisab-hum kaam* how much is their bill? *dafaɛt' kaam* how much did you pay? *ſil-ɋuuṭa b-kaam in-nahar-da* how much are tomatoes today? *ſiftareet-u b-kaam* for how much did you buy it? **2** /interrog numerary specifier/ what (number)? *ſis-saaɛa kaam* what time is it? *nimrit it-tilifoon kaam* what's the telephone number? *fi-sanat kaam* in what year? *ɛala buɛd' kaam* at what distance? *tiigi ɛala kaam* what time are you coming? **3** /unspecific quantifier/ some, a few. *faat*

kaam yoom a few days went by. *ʕiddii-ni kaam ḥittit ṣabuun* give me a few bars of soap. *nisyit il-kaam kilma lli qult^{i}-ha-lha* she forgot the few words I told her. *been kull^{i} kaam ʒaskari ẓaabiṭ* between every few soldiers there is an officer.

كمّيّة *kimmiyya, kammiyya* /n pl *-aat*/ amount, quantity. *yizawwid kimmiyyit il-banziin in-nazla fil-muṭoor* it increases the amount of petrol going into the engine. *ḥ-agib-lak kimmiyyaat tanya min il-ʒizba* I'll bring further quantities from the estate.

ك م ا ج

كماج *kimaag* <P *kumâj*> /coll n/ type of wheat bread.

كماجة *kimaaga* /unit n, pl *-aat*/ a loaf of *kimaag*.

ك م ا ن ^{1}

كمان *kamaan^{1}* /adv/ **1** also, too, as well. *ʕinta kamaan lak sulṭaat* you too have powers? *saakin fi-ʃaqqa gdiida w-gamiila kamaan* he lives in an apartment which is new and pretty as well. *miʃ ḥ-aḥaṣṣal la marḥala talta wala rabʒa kamaan* I won't reach either the third or the fourth stage. **2** in addition, more. *haat qahwa kamaan* bring another coffee. *kamaan nooba* one more time. *ʕistanna kamaan ʃiwayya* wait a little more!

ك م ا ن ^{2}

كمان *kamaan^{2}* <T *keman* from P> **1** /coll n/ violin(s). **2** = *kamanga*. see further under ك م ن ج

ك م ا و see ك م ى : *kamaawi, kamawiyyaat*

ك م ب

كامب *kamb* <Engl> /n pl *-aat*/ camp.

ك م ب ر س

كمبارس *kumbars* <Fr *comparse*> /invar n/ *[cin]* extra.

ك م ب ر -

كمبرسول *kumburisuul* <Fr *compresseur*> /n/ air compressor.

ك م ب ش

كمبوش *kamboof* /n/ untidy head of hair.

كمبش *kambiʃ* **1** /vt/ to dishevel (hair). **2** /vi/ to be dishevelled (of hair). - vn *kambaʃa*; ava/pva *mikambiʃ*.

اتكمبش *ʔitkambiʃ* or *ʔikkambiʃ* /vi/ to be or become dishevelled (of hair). - ava/iva *mitkambiʃ*.

ك م ب ل -

كمبليه *kumbileeh* <Fr *complet*> /adj invar/ **1** full, filled to capacity (of a cinema etc.). **2** complete (of a restaurant meal). **3** sold out (of tickets, and the like).

ك م ب ن -

كومبينزون *kumbinezoon* <Fr *combinaison*> /n pl *-aat*/ (women's) slip, petticoat.

ك م ب و ت

كمبوت *komboot* <Fr> /n pl *-aat*/ compote.

ك م ب ى

كمبيو *kambyu* <It *cambio*> /n/ currency exchange. *siʒr ik-kambyu* rate of exchange.

ك م ب ى -

كمبيالة *kimbiyaala, kumbiyaala* <It *cambiale*> /n pl *-aat*/ promissory note.

ك م ت ر

كمّترى *kummitra* /coll n/ pear(s). *ʕil-gawaafa l-baladi ʮli zayy il-kummitra [vendor's cry]* guavas as fine as pears! *kummitra xaffaabi* variety of hard pear.

كمّترايا *kummitraaya* /n pl *-aat, kummitraat*/ **1** /unit n/ a pear. **2** free-hanging electric light-switch.

ك م ث ر see ك م ت ر

ك م ج see ك م ا ج : *kimaag, kimaaga*

ك م خ

كمخ *kammax* /vi/ to become musty. *law sibna l-ɣasiil min ɣeer nafiir yikammax* if we don't hang out the washing it gets musty. - vn *takmiix*; ava *mikammax*.

ك م د ^{1}

كمد *kamad (i)* /vt/ to sadden, grieve. *ʕil-xabar kamadna* the news filled us with sadness. - vn *kamadaan*; ava *kaamid*; pva *makmuud*.

كمدة *kamda* /n/ grief, sorrow.

كمّادة *kammaada* /n pl *-aat*/ compress. *kammaada suxna* a hot compress.

مكمّدة *mikammada* /n pl *-aat*/ compress.

انكمد *ʔinkamad* /vi/ to be saddened, be grieved. - iva *minkimid*.

اتكمد *ʔitkamad* or *ʔikkamad* = *ʔinkamad*. - iva *mitkimid*.

ك م د ^{2} see ك م د ى : *kumiidi*

ك م د ى
كوميديا *kumidya* <It *comedia*> /n/ comedy.
كوميدى *kumiidi* /adj/ comic. *film' kumiidi* a comic film.

(ك م د ى -)
كوميديان *kumidyaan* /n invar/ comedian.
كمدينو *kumudiinu* <It *comodino*> /n pl *kumuđinaat*/ bed-side table.

ك م ر [1]
كمر *kamar' (u)* /vt/ **1** to clamp (wood) for charcoal making. **2** to (partially) bury or clamp (grains, *fuul*, and the like) so as to process them by slow generation of heat. - vn *kamaraan, kamr*; ava *kaamir*; pva *makmuur*.
مكمور *makmuur* /n/ a kind of stew prepared in an earthenware pot buried in hot ashes.
مكمورة *makmuura* /n pl *makamiir*/ covered excavation in which beans etc. are slow-cooked.
كمّارة *kammaara* /n pl *-aat*/ **1** = *makmuura*. **2** charcoal kiln.
مكمرة *makmara* /n/ compost pile. *bi-niɛmil min it-tibn' btaaɛ il-fuul makmarit sibaax baladi* we use the bean stalks to make a compost pile for fertilizer.
اتكمر *ʔitkamar* or *ʔikkamar* /vi/ passive of *kamar'*. - iva *mitkimir*.
انكمر *ʔinkamar* = *ʔitkamar*. - iva *minkimir*.

ك م ر [2]
كمر *kamar²* <T *kemer* cf Gr *kamara*> /n/ **1** /coll/ steel beam(s), girder(s). **2** /pl also *kamar*/ broad belt of leather with pockets for keeping of valuables, money belt.
كمرة *kamara'* /unit n, pl *-aat*/ a steel beam, a girder.

[3] (ك م ر)
كمرة *kamira, kamara* <Engl> /n pl *-aat*/ camera.
كمرة *kamara²* /n pl *-aat*/ *[anat]* glans penis.

ك م ر و ش
كمروش *kamaroof* /n/ blow-job (in homosexual jargon).

ك م ر ى ر
كمريرة *kamareera* <It *cameriera*> /n pl *-aat*/ nanny, children's nurse.

ك م ر ى ن
كومارين *kumariin* /n/ artificial lavender oil.

ك م س ر ى
كمسرى *kumsari* <It *commissario*> /n pl *kumsariyya*/ conductor (of a bus, train or tram).

ك م س ى -
كمسيون *kumisyoon* <Fr> /n pl *-aat*/ **1** *[admin]* commission. ‖*kumisyoon ţibbi* central clinic for medical examination of government personnel, medical board. **2** *[comm]* commission.
كمسيونجى *kumisyungi* /n pl *-yya*/ salesman working on a commission basis.

ك م ش
كمش *kamaʃ (i, u)* /vt/ **1** to grab, take hold of. *kamaʃ-u min raqabt-u* he grabbed him by the throat. **2** to cause to cower, make shrink. *zaɛaq fii kamaʃ-u* by yelling at him he made him cower. – /vi/ **3** to shrink, cower. - vn *kamaʃaan*; ava *kaamiʃ*; pva *makmuuʃ*.
كمّاشة *kammaaʃa* /n pl *-aat*/ pair of tongs, pincers.
اتكمش *ʔitkamaʃ* or *ʔikkamaʃ* /vi/ **1** to be grabbed. **2** to be made to cower. **3** to cower, shrink, contract. *ʔitkamaʃ fi-rukn-u w-naam* he withdrew into his corner and slept. - ava/iva *mitkimiʃ*.
انكمش *ʔinkamaʃ↑* = *ʔitkamaʃ*. - vn *ʔinkimaaʃ*; ava/iva *minkimiʃ*.

ك م ل
كمل *kimil (a)* /vi/ to become complete, become perfect. *kimlit farħit il-ɛaruusa* the happiness of the bride became complete. *ʔahu l-qamiiş wiz-zaraayir kamla* here's the shirt with all its buttons. *ʔil-ħilw' ma-yikmalʃ [prov]* nothing can be perfect. - vn *kamaal*; ava *kaamil*.
كمال *kamaal* /n/ perfection. *ʔik-kamaal li-llaah* perfection belongs to God (alone). ‖*sitt' şaħbit ʔadab wi-kamaal* a real lady.
كمالى *kamaali* /adj/ luxury, non-essential.
كماليّات *kamaliyyaat* /n pl/ non-essentials, luxuries. ‖*ʃaqqa bil-kamaliyyaat* a well-appointed flat.
كامل *kaamil* /adj/ complete, perfect. *dayra kamla* complete circle. *muslım kaamil* a perfect Muslim. ‖*kaamil in-nuur* epithet of the Prophet Muhammad. - *bi-kaamil il-qudra* at full capacity. - *bil-kaamil* in toto.
كمالة *kimaala* /n pl *-aat*/ balance, complement, supplement. *kimaalit il-kimmiyya* the make-weight. ‖*kimaalit ɛadad* useless or inconsequential person or persons.
كمّل *kummal* /adj invar/ well-bred, genteel. *sitt' kummal* a real lady.
أكمل *ʔakmal'* /el/ more/most complete or perfect. *ɛala ʔakmal wagh* in the best possible way.

كمّل *kammil* /vt/ **1** to complete, finish. *laazim nikammil il-mafawiir* we must finish (our) errands. *kammil ʃakl-ak baʕdeen* finish your food later on. *ʕaayiz ʃakammil kalaam-i* I want to finish what I'm saying. ‖ *kammil gimiil-ak* (if you do someone a favour) do it all the way. - *ħ-akammil ʕaʃaa-ya noom* I'll go without supper. - *kammil nuṣṣ[i] diin(-u)* to get married (of a man). **2** to make up, add up to, make complete. *ʃil-fakka lli mʕaaya ma-tkammil-f[i] gneeh* I don't have a pound's worth of change on me. — /vi/ **3** to keep on (toward a conclusion). *nikammil bi-nafs iṭ-ṭariiqa lli faatit* we carry on as before. *yikammil gary* he continues running. *ma-tkammil-ʃ - ʃana ʕarfa l-ħikaaya kull-a-ha* don't go on, I know the whole story. - vn *takmiil*; ava/pva *mikammil, mukammil*.

تكميلي *takmiili*↑ /adj/ complementary, supplementary. *ʕaawiz sanateen diraasa takmiliyya* I need two years of supplementary study.

تكملة *takmila* /n pl *-aat*/ supplement.

اتكمّل *ʃitkammil* or *ʃikkammil* /vi/ **1** to be completed, be finished. **2** to be made up, be made complete. - iva *mitkammil*.

أكمل *ʃakmal*[2]↑ = *kammil*. - vn *ʃikmaal*.

اكتمل *ʃiktamal*↑ /vi/ to become complete. - vn *ʃiktimaal*; ava *miktimil, muktamil*.

استكمل *ʃistakmil* /vt/ **1** to make up for a lack of. *fii ħagaat naqṣa mafruuḍ nistakmil-ha* there are things missing which we should replace. **2** to complete, fulfil. *wizaarit iṣ-ṣiħħa b-tiddii-k furṣa l-istikmaal if-furuuṭ* the Ministry of Health gives you an opportunity to fulfil the conditions. - vn *ʃistikmaal*; ava *mistakmil*.

ك م ل ى

كملية *kamilya* /n/ camellia.

[1] ك م م

كمّ *kumm* /n pl *ʃakmaam, kimaam*/ sleeve. *ʕamiiṣ bi-nuṣṣ[i] kumm* a short-sleeved shirt. ‖ *ħarakaat in-nuṣṣ[i] kumm* a con game.

كمامة *kimaama* /n pl *-aat, kamaayim*/ **1** (face) mask. **2** gag. **3** muzzle.

كمّم *kammim* /vt/ **1** to gag. **2** to muzzle. - vn *takmiim*; ava/pva *mikammim*.

اتكمّم *ʃitkammim* or *ʃikkammim* /vi/ **1** to be gagged. **2** to be muzzled. - iva *mitkammim*.

[2] ك م م see ك م : *kimmiyya, kammiyya*

ك م ث ر see ك م ت ر

[1] ك م ن

كمن *kaman (i)* /vi/ to set an ambush, lie in wait. *ʃaggar-lu ʕaaba kamanit-li fil-ħaara* he hired a gang to lie in wait for me in the alley. - vn *kumuun*; ava *kaamin*.

كامن *kaamin* /adj/ latent, inherent.

كمين *kamiin* /n pl *kamaayin*/ ambush.

مكمن *makman* /n pl *makaamin*/ lair. ‖ *makman if-ʃarr* source of evil.

[2] ك م ن

كمّون *kammuun* /n/ cumin.

كمّونيّة *kammuniyya* /n/ a dish of meat prepared with cumin.

[3] ك م ن see ك م ا ن : *kamaan*

ك م ن ج see also [2] ك م ا ن

كمانجة *kamanga* <P *kamâncha*> /n pl *-aat*/ violin.

كمانجاتي *kamangaati* /n pl *-yya*/ *[deris]* violinist.

ك م ن د

كوماندة *kumanda* <perh It *comando*> /masc n pl *-aat*/ **1** (ship's) captain. **2** boss.

ك م ن د –

كمندان *kumandaan, kumundaan, kumindaan* <Fr *commandant*> /n pl *-aat*/ **1** ship's captain. **2** commanding officer.

ك م و see ك م ى : *kimaawi, kimawiyyaat*

ك م ى

كيمياء *kimya* /n/ chemistry.

كماوى *kimaawi* **1** /adj/ chemical. *bi-ynaḍḍafu l-faḍḍa l-miʃaksida b-mawadd[i] kimawiyya* they clean tarnished silver with chemical preparations. **2** /n */ chemist. **3** /n, no pl/ chemical fertilizer. *maṣnaʕ kimaawi* chemical fertilizer factory.

كيماويّات *kimawiyyaat* /pl n/ chemicals.

ك م ى و ن

كميون *kamyoon* <Fr *camion*> /n pl *-aat*/ lorry, truck.

ك ن ا ر

كنار *kinaar* <P *kinâr*> /n pl *-aat*/ trimming (on the edge of a garment).

ك ن ا ف

كنافة *kunaafa* /n pl *-aat*/ fresh fine noodles used as the basis for a pastry of the same name, often stuffed with

nuts, baked with butter and soaked in syrup or honey.
كنافاية *kunafaaya* /unit n, pl *-aat*/ piece of *kunaafa*.
كنافاني *kanafaani, kunafaani* /n pl *-yya*/ one who makes and sells *kunaafa*.
كنفاتي *kunafaati* /n pl *-yya*/ = *kanafaani*.

ك ن ا ل
كنال *kanaal* <Fr>: *kanaal is-siwees* or *ʃil-kanaal* the Suez Canal. - also *qanaal*.

ك ن ب
كنبة *kanaba* <Fr *canapé*> /n pl *-aat*/ sofa. *kanaba baladi* ottoman. *kanaba studyu* (or *ʃafrangi*) studio couch.
كنب *kanab* /coll n/ sofa(s).

ك ن ت
كنت *kint* /n pl *-aat*/ run, straight (in cards). *kint' ryaal* royal flush.

ك ن ت ا ك
كنتاك *kuntaak* <Fr *contact*> /n/ *[mech]* ignition. - also *kuntakt*.

ك ن ت ر [1]
كنتر *kantar* /vt/ **1** to stand (s.o.) up. *baʒd' kull ik-kalam-da kantar-ni* after all that talk he stood me up! **2** to do or perform in a slipshod manner. *ʃil-mikaniiki bn ik-kalb' kantar ʒamaliyyit ʒabṭ il-ʃazbarateer xaliṣ* the s.o.b. of a mechanic did a lousy job when he set the distributor. - vn *kantara*; ava/pva *mikantar*.
اتكنتر *ʃitkantar* or *ʃikkantar* /vi/ passive of *kantar*. - iva *mitkantar*.

ك ن ت ر [2]
كنترجي *kuntargi* <T *kunduracı*> /n pl *-yya*/ *[obsol]* shoemaker, cobbler. - also *kundargi*.

(ك ن ت ر -)
كنتراتو *kuntaraatu, kunturaatu* <It *contratto*> /n pl *kuntarataat, kuntaratuhaat, kunturataat, kunturatuhaat*/ contract. *maqduu-ni ʒal-kuntaraatu btaaʒ if-faqqa* they made me sign the lease for the apartment.
كنترباس *kuntirbaas* <Fr *contrebasse*> /n pl *-aat*/ *[mus]* contrabass.
كنترابولتي *kuntrubulti* <It *contrappunto*> /n/ *[mus]* counterpoint.
كنترول *kunturool* <Fr *contrôle*> /n/ **1** office within a university for administering and registering examinations. **2a** point at which tickets are collected and checked at an entrance door. **2b** an official of a private club who checks membership cards and issues tickets to visitors. **3** point at a shop exit at which goods are handed over to the customer against receipts for money paid. **4** any kind of check-point.

ك ن ت ك ت
كنتكت *kuntakt* <Fr *contact*> /n/ *[mech]* ignition. - also *kuntaak*.

ك ن ت و
كنتو *kantu* <It *canto* corner> /n/ junk. *suuq il-kantu* flea market.

ك ن ت ي ر
كنتير *kantiir* /n pl *-aat*/ **1** kind of high-pitched drum. **2** silk or metal-spun *ʒuud* string(s). *kantiir ḥuseeni* (pair of) A strings.

ك ن ت ي س
كونتيسة *kunteesa* <It *contessa*> /n pl *-aat*/ countess.

ك ن ت ي ن
كنتين *kantiin* <Engl> /n pl *-aat*/ **1** canteen, refreshment counter. **2** (water) canteen.

(ك ن ج)
كنجة *kinja*[1] /n pl *-aat*/ pentagonal panel used in *ḥaʃw' baladi* (see Pl.G, 11).
كنجة *kinja*[2] /n pl *-aat, kinag*/ (pair of) football boots.

ك ن ج ر و
كنجرو *kangaruu* <Engl> /n pl *-aat*/ kangaroo.

(ك ن ج ي)
كنجي *kingi*[1] <T *ikinci*> /n/ second one in a series.
كنجي *kingi*[2] <perh Engl *king*> /n/ breed of pigeon with long legs and a short body.

ك ن د ر
كندر *kundara* <T *kundura*> /n pl *kanaadir*/ *[obsol]* (pair of) shoes.
كندرجي *kundargi* <T *kunduracı*> /n pl *-yya*/ shoemaker, cobbler. - also *kuntargi*.

ك ن د ن -
كندنسر *kundinsar* <Engl> /n pl *-aat*/ condenser.

ك ن د و ز
كندوز *kanduuz* /n/ meat from a mature buffalo or cow.

ك ن ر see ك ن ا ر : *kinaar*

ك ن ر ي ا
كناريا *kanarya* <Fr *canari*> **1** /n pl *-aat*/ canary. **2** /adj invar/ canary-yellow.

ك ن ز [1]
كنز *kanaz[1] (i)* /vt/ to hoard (money). - vn *kanazaan, kanz*; ava *kaaniz*; pva *maknuuz*.
كنز *kinz, kanz* /n pl *kunuuz*/ treasure.
كنزى *kunazi* /n pl *-yya*/ miser, one who hoards money. *maal ik-kunazi lin-nuzahi [prov]* ≈ what the miser hoards his heir will squander.
اتكنز *ʔitkanaz* or *ʔikkanaz* /vi/ to be hoarded. - iva *mitkiniz*.
انكنز *ʔinkanaz* = *ʔitkanaz*. - iva *minkiniz*.

ك ن ز [2]
كنز *kanaz[2] (i)* /vi/ to shrink (of cloth). - vn *kanazaan*.
كنز *kiniz* /adj */ **1** narrow. *faariʕ kiniz* a narrow street. **2** stocky (of a person).
أكنز *ʔaknaz* /el/ more/most narrow.
كنز *kanniz* /vt/ to make narrow. - vn *takniiz*; ava *mikanniz*.
اتكنز *ʔitkanniz* or *ʔikkanniz* /vi/ to be made narrow. - iva *mitkanniz*.

ك ن س [1]
كنس *kanas, kanas (u, i)* /vt/ to sweep. *ʔiz-zabbaal bi-yiknis iz-zibaala* the garbage man sweeps up the garbage. *ʔuknus beet-ak wi-ruff-u - ma-tiʕraf miin yixuff-u [prov]* sweep and sprinkle your house - you never know who may enter it. - vn *kans, kans, kaniis*; ava *kaanis, kaanis*; pva *maknuus*.
كنسة *kansa* /n pl *-aat*/ **1** instance noun of *kans*. **2** ritual of sweeping a saint's tomb as an act of devotion.
كناسة *kunaasa* /n/ sweepings. *kunaasit if-faariʕ* street-sweepings.
كنّاس *kannaas* /n * and pl *kannaasa*/ street sweeper.
مكنسه *maknasa, muknisa* /n pl *makaanis*/ broom. *maknasa kahraba* vacuum cleaner. ‖ *nawwit il-muknisa* and *nawwit baaqi l-muknisa* see *nawwa*.
انكنس *ʔinkanas* or *ʔikkanas* /vi/ to be swept. - iva *mitkinis*.
انكنس *ʔinkanas* = *ʔitkanas*. - iva *minkinis*.
كنّس *kannis* = *kanas*. - vn *takniis*; ava/pva *mikannis*.
اتكنّس *ʔitkannis* or *ʔikkannis* = *ʔitkanas*. - iva *mitkannis*.

ك ن س [2]
كنيسة *kiniisa* /n pl *kanaayis*/ church. *ʕaalu ya kniisa ʔislimi. - ʕaalit ʔilli fil-ʕalb[i] fil-ʕalb [prov]* (they said to the church, 'Become Muslim.' She said, 'What is in the heart is in the heart.') ≈ you can change what I say but not what I think.
كنايسى *kanaysi* /n/ type of *mafrafiyya* design (see Pl.G, 8).
كنسى *kanasi* /adj */ of or pertaining to the church, ecclesiastical. *ʔil-qanuun il-kanasi* canon law.

ك ن س ت -
كونستبل *kunustabl* <Engl *constable*> /n pl *-aat*/ mounted policeman, motor-cycle policeman.

ك ن س ل
كنسل *kansil* <Engl> /vt/ to cancel. *kansil il-maʕaad il-lelaa-di* cancel tonight's appointment. ‖ *ma-tduqq[i]-ʃ ʕala kalam-ha - kansil* don't fret about what she says - forget about it! - vn *kansala*; ava/pva *mikansil*.
اتكنسل *ʔitkansil* or *ʔikkansil* /vi/ to be cancelled. - iva *mitkansil*.

ك ن س ل -
كونسلتو *kunsultu* <It *consulto*> /n pl *-haat*/ group of medical specialists (called together to make a joint diagnosis).

ك ن ص و ل
كنصول *kunṣool* <Fr *console*> /n pl *-aat*/ console table.

ك ن ف [1]
كنيف *kiniif, kaniif* /n pl *-aat*/ *[trad soc]* toilet, lavatory.

ك ن ف [2] see ك ن ا ف : *kunaafa, kunafaaya, kanafaani, kunafaani, kunafaati*

ك ن ف ا ه
كنفاه *kanavaah* <Fr *canevas*> /n/ embroidery canvas. *fuxl[i] kanavaah* needlepoint work, tapestry work.

ك ن ك
كنكة *kanaka* <T *teneke*> /n pl *-aat*/ pot for brewing Turkish coffee (see Pl.B, 3).
كنك *kanak* /coll n/ **1** pots for brewing Turkish coffee. **2** large metal containers for liquids.
مكنّك *mikannik* /adj */ crammed together in a disorderly fashion. *kutub mikannika f-fanṭa* books crammed together into a bag.

ك ن ك ن [1]
كنكن *kankin'* /vi/ to stay at home. - vn *kankana*; ava *mikankin*.

ك ن ك ن [2]
كنكان *kunkaan* /n/ rummy (card game).
كنكن *kankin²* /vi/ to win a hand of rummy. - vn *kankana*; ava *mikankin*.

ك ن ل see ك ن ا ل : *kanaal*

ك ن ن [1]
كنّ *kann (i)* /vt/ **1** to hide away, shut away (s.o.). *kinn' bint-ak fil-beet* keep your daughter at home! **2** *[non-Cairene]* to hide away, shut away (s.th.). - vn *kann*; ava *kaanin*; pva *maknuun*.
الكنانة *ʃil-kinaana* /prop n/ epithet for the land of Egypt.
انكنّ *ʃinkann* /vi/ **1** to be hidden away, be shut away. **2** to calm down, settle down. *ma tinkann' ya waad l-alṭuf-ak ɛala buuz-ak* shut up and settle down, kid, or I'll whack you one on the snout! - ava/iva *minkaan*.
اتكنّ *ʃitkann* or *ʃikkann* = *ʃinkann*. - ava/iva *mitkann*.
مستكنّ *mustakinn* /adj/ *[path]* latent.

ك ن ن [2] see ك ن و ن : *kanuun*

ك ن ن [3] see ك ن ى ن : *kiniin*

ك ن ه
كنه *kunhˆ* /n/ true nature, essence.

ك ن و ن
كانون *kanuun* /n pl *kawaniin*/ clay or mud-brick hearth for cooking. *rakkibu l-kahraba ẇ-baṭṭalu l-kanuun* they installed electricity and stopped using the open hearth.

ك ن ى
كنية *kunya* /n pl *-aat*/ respectful form of address or reference compounded of *ʃabu* (for males) or *ʃumm* (for females) and the name of the father or eldest son (or, especially in the case of women who have no sons, the name of the eldest daughter). *ʃumm" mḥammad* the mother, or daughter, of Muhammad. *ʃabu saalim* the father, or son, of Salim. ‖*raagil ma-luu-ʃ kunya* a worthless man.
كناية *kinaaya* /n pl *-aat*/ metaphor. ‖*bi-yitkallim bil-kinaaya* he beats about the bush, he speaks indirectly. ¶ *kinaaya ɛan* tantamount to.

ك ن ى ا ك
كونياك *kunyaak* <Fr *cognac*> /n/ cognac, brandy.

ك ن ى ن
كنين *kiniin* <Fr> /n/ quinine.

ك ه ر ب
كهرب *kahrab* /vt/ **1** to electrify, apply electricity to. **2** to shock, electrify. ‖*kahrabt' kuuɛ-i* I hit my funny bone. **3** to thrill, electrify. - vn *kahraba*; ava/pva *mikahrab*.
كهربا *kahraba* /n/ electricity. *ɣassaala bil-kahraba* an electric washing machine. *ʃir-raagil bitaaɛ il-kahraba* the electricity man.
كهربي *kahrabiˆ* /adj/ electric, electrical.
كهربائي *kahrabaaʃi, kahrubaaʃi* **1** /adj/ electrical. *ʃit-tawṣiila l-kahrabaʃiyya* the electrical connection. **2** /n pl *-yya*/ electrician. *ʃil-ɛidda lli b-yistaɛmiluu-ha l-kahrabaʃiyya* the equipment which electricians use.
اتكهرب *ʃitkahrab* or *ʃikkahrab* /vi/ passive of *kahrab*. - iva *mitkahrab*.

(ك ه ر م -)
كهرمان *kahramaan* /n/ amber.
كهرومغناطيسي *kahrumaɣnaṭiisiˆ* /adj */ *[phys]* electromagnetic.

ك ه ف
كهف *kahfˆ* /n pl *kuhuuf*/ cavern, cave.

ك ه ل
كهل *kahl* /adj pl *kuhuul*/ middle-aged.
كهولة *kuhuula* /n/ old age.

ك ه ن [1]
كهنة *kuhna* <P *kuhna*> **1** /coll n/ scrap, junk, rags. ‖*ḥabl' kuhna* old rope. **2** /n pl *-aat, kuhan*/ a rag.
كهّن *kahhin* /vt/ to scrap, throw out. - vn *takhiin*; ava/pva *mikahhin*.
اتكهّن *ʃitkahhin* or *ʃikkahhin* /vi/ to be scrapped, be thrown out. - iva *mitkahhin*.

ك ه ن [2]
كهن *kuhn* /n/ (womanly) guile.
كهانة *kahaana* /n/ (womanly) guile.
كهين *kahiin* /adj pl *kuhana*/ guileful, wily. see further under ك ه و ن
أكهن *ʔakhan* /el/ more/most guileful.
كاهن *kaahin* /n pl *kahana*/ **1** priest. **2** soothsayer, seer.
كهنوت *kahanoot* /n/ **1** priesthood, holy orders.

tinqisim rutab il-kahanoot ʃila sabaʕ daragaat the ranks of the priesthood are divided into seven grades. **2** pontificating dogmatism, punditry.
اتكهّن *ʃitkahhin↑* or *ʃikkahhin↑* /vi/ to make predictions. - vn *takahhun*; ava *mitkahhin*.
تكهّن *takahhun* /n pl *-aat*/ prediction, prophecy.

ك ه و ن see also ك ه ن [2]
كهون *kahwin* **1** /vt/ to make (s.o.) sly, wily or guileful. **2** /vi/ to become sly, wily or guileful. - vn *kahwana*; ava/pva *mikahwin*.
اتكهون *ʃitkahwin* or *ʃikkahwin* /vi/ to become or be made sly, wily or guileful. - ava/iva *mitkahwin*.

ك و ا
كوا *kawa[1]*: such expressions as *ʃil-ʕaruusa n-nuusa kawa n-nuusa* ≈ bridey-widey. *ya ʕaziiza n-niiza kawa n-niiza* lovey-dovey Aziza.

ك و ب
كوب *kuub* <Fr *coupe*> /n pl *ʃakwaab*/ **1** bell-shaped lamp shade. **2** suit-length (of material).

ك و ت
الكوتة *ʃil-kuuta: ţafaħ* (or *ţaraf* or *ʃirib) il-kuuta* to work oneself to exhaustion. *ħ-aţaffaħ-ak il-kuuta* I'll give you a hard time! *ma-ħilt-uu-ʃ il-kuuta* he hasn't a penny to his name.

ك و ت ر
كوتر *kootar* <Engl> /n pl *kawaatir/ [naut]* cutter.

ك و ت ش
كاوتش *kawitʃ* <It *caucciù*> /coll n/ **1** rubber. **2** (loosely) anything made of rubber. *kawitʃ il-ʕarabiyya* automobile tyres. *(gazma) kawitʃ* gym shoes.
كاوتشة *kawitʃa* /unit n, pl *-aat*/ piece of rubber.
كاوتشاية *kawitʃaaya = kawitʃa*.

ك و ت ش -
كاوتشوك *kawitʃuuk = kawitʃ*. *ʃir-raagil ik-kawitʃuuk* contortionist (circus act).

ك و ح see ق و ح: *kaawiħ*

ك و خ
كوخ *kuux* /n pl *ʃakwaax*/ shack, hut.

ك و د [1]
كود *kuud* <Engl> /n pl *-aat*/ code.

كودى *kuudi* /adj/ in code, coded.

ك و د [2] see ك د ى: *kudya*

ك و ر [1] see also ك ر
كورة *koora* /n pl *-aat, kuwar, kiwar*/ **1** ball. *koora ţibbiyya* medicine ball. *koora ʃaraab* ball made of socks or rags used in street soccer games. *koora ţayra* volleyball. **2** *[sport]* ball play. *koora ħilwa* (or *saliima*) good play. *koora ţawiila* long shot (soccer). *koora saqţa* drop shot (tennis).
كوّر *kawwar* /vt/ **1** to make into a ball, make round. *kawwar il-ʕagiina* he shaped the dough into a ball. ‖*ḍarba tkawwar ʕenee* a blow which will make his eyes puffy. **2** to clench. *kawwar ʃiid-u* he clenched his fist. — /vi/ **3** to become ball-shaped or round. **4** to become clenched. *baʕd il-ʃakl[i] maṣariin-i tkawwar* after eating, my intestines knot up. - vn *takwiir*; ava/pva *mikawwar*.
تكويرة *takwiira* /pl *-aat*/ instance noun of *takwiir*.
اتكوّر *ʃitkawwar* or *ʃikkawwar* /vi/ **1** passive of *kawwar* 1 and 2. **2** to curl up, assume a round shape. *ʃitkawwar fis-siriir* he curled up in bed. - ava/iva *mitkawwar*.

ك و ر) [2]
كور *koor* <Fr *corps*> /n/ *[print]* unit of type size (according to Didot points).
كور *kuur* /n pl *ʃakwaar, kiraan*/ (blacksmith's) bellows.

ك و ر [3] see ك ا ر: *kaar, kaara*

ك و ر ت
كورتة *kawirta* <It *coperta*> /n pl *-aat*/ **1** deck. **2** awning (on a boat).

ك و ر س
كورس *kooras* <Engl> /n/ chorus.

ك و ر ك
كورك *kawirk* /adj invar/ *[mil slang]* raw, green (of a recruit).

ك و ز
كوز *kuuz* /n pl *kizaan, ʃakwaaz*/ **1** tin mug, pitcher or old can used as a vessel for water. *ya raagil ya ʕaguuz manaxiir-ak ɢadd ik-kuuz [children]* ≈ you silly old man with a nose as big as a billy can (a mocking chant). ‖*kuuz il-ʕasal* variety of melon, egg-shaped and resembling the cantaloupe in colour, size and taste. **2** (also *kuuz dura*) ear of maize. ‖*ħalaqt[i] b-kuuz dura*

your haircut is dreadful. **3** (also *kuuz tiin*) prickly pear. see further under ك ز ن

ك و س ¹
كوسة *koosa, kuusa* /n/ **1** /coll/ zucchini, courgette(s). **2** operating through connections and bribery. *fuɣl il-koosa* use of connections and bribery.
كوسايا *kusaaya* /unit n, pl *-aat*/ a zucchini, a courgette.
كوّس *kawwıs* /vt/ to make progress in (a situation) by the use of connections and bribes. *laazim tikawwis il-ɛamaliyyaa-di ɛaʃaan timʃi* you've got to work with connections and bribes in this thing in order to get it moving. - vn *takwiis*; ava/pva *mikawwis*.
اتكوّس *ʔitkawwis* or *ʔikkawwis* /vi/ passive of *kawwis*. *ʔil-mawquuɛ itkawwıs* the matter was handled by means of connections and greasing palms. - iva *mitkawwis*.

ك و س ² see ² ك ى س : *kawaasa, kuwayyis, kiwayyis*

ك و ش
كوشة *kooʃa* <perh P *gosha*> /n pl *kuwaʃ, koʃaat*/ **1** dais on which bride and groom sit during a wedding celebration. **2** rubber block or clamp on a bicycle brake, brake-block. **3** small ring connecting items of jewelry. **4** hook and eye. **5** burner (of a primus stove).
كوّش *kawwiʃ* /vi/ to take exclusive possession, gain a monopoly. *ʔıt-tuggaar ik-kubaar bi-ɣkawwiʃu ɛala t-tamwiin* the big merchants make a corner in rationed goods. - vn *takwiiʃ*; ava *mikawwiʃ*.
تكويشة *takwiiʃa* /pl *-aat, takawiiʃ*/ instance noun of *kawwiʃ*.
اتكوّش *ʔitkawwiʃ* or *ʔikkawwiʃ* /vi/ (impersonal) passive of *kawwiʃ*. *ʔil-ʔakl ıtkawwıʃ ɛalee* the food has been appropriated. - ıva *mitkawwiʃ*.

ك و ع
كوع *kuuɛ* /n pl *kiɛaan*/ **1** elbow. ‖*kuuɛ rixiif* end of a loaf, heel of a loaf. - *ma-yiɛraf-ʃ' kuuɛ-u min buuɛ-u* ≈ he cannot discriminate. - *saqeet-u l-murr' min kiɛaan-u* ≈ I gave him a hard time. **2** elbow bend, elbow joint (of a pipe etc.). **3** bend, curve (in a road).
كوعة *kuuɛa* /n pl *-aat*/ = *kuuɛ*.
كوّع *kawwaɛ* /vt/ **1** to bend into the shape of an elbow. — /vi/ **2** to curl up, take a nap. **3** to fail (in an examination). - vn *takwiiɛ*; ava/pva *mikawwaɛ*.
تكويعة *takwiiɛa* /n pl *-aat, takawiiɛ*/ elbow bend, elbow joint (of a pipe, and the like).
اتكوّع *ʔitkawwaɛ* or *ʔikkawwaɛ* /vi/ to be bent into the shape of an elbow. - iva *mitkawwaɛ*.

ك و ف
كوفى *kuufi: (xaʈʈ') kuufi* Kufic script (characterized by straight lines and angles as opposed to the cursive script).
كوفيّة *kufiyya* /n pl *-aat*/ **1** kaffiyeh. **2** (man's) scarf.

ك و ف ى ر
كوافير *kawafiir*↓, *kuwafeer* <Fr *coiffeur*> /n pl *-aat*/ hair stylist.

ك و ك
كوك *kuuk* <Engl>: *faɧm' kuuk* coke.

ك و ك ب
كوكب *kawkab* or *kookab* /n pl *kawaakıb*/ heavenly body, star, planet. ‖*kawkab ʔis-siima* film star. - *kawkab if-farq* epithet for the late Umm Kalthum.

ك و ل ¹
أكول *ʔakwal* /adj, fem *koola*, pl *kuul*/ yellowish (of the plumage of a certain variety of tumbler pigeon).

ك و ل ²
كول *kool*↑ <Fr *col*> /n pl *-aat*/ collar. *kool ʃaal* shawl collar. *kool kuludiin* Peter Pan collar.
كوله *koola* /n pl *-aat*/ collar.

ك و ل و ن – see ¹ ك ل و ن : *kawalingi*

ك و ل ى س
كواليس *kawaliis* <Fr *coulisse*> /pl n/ *[theat]* backdrops. *wara l-kawaliis* backstage.

ك و م
كوم *koom* /n pl *ʔakwaam, ʔikwaam, kuwaam*/ pile, heap. *ɛandi fuɣl ikwaam* I have piles of work (to do). *bil-koom* in quantity, in abundance. ‖*raagil ɣalbaan fi-raqabt-u koom laɧm* a poor man with a lot of children to support. - *ʔinta faakir bi-ngiib-u min ɛal-koom* ≈ do you think we get it for nothing? do you think it grows on trees? - *kubr ik-koom wala ʃamaatit il-ɛadiwwiin [prov]* ≈ better to make a show than be gloated over by your enemies. - *da koom wi-da koom* these are two entirely different things, as in *ʔir-rafwa koom wil-maɧsubiyya koom* bribery is a far cry from favouritism, *kull il-ʔasbaab di koom wi-ʔinnak ma-git-ʃ' koom* all these reasons have nothing to do with the fact that you didn't come.
كومه *kooma* /n pl *-aat*/ pile, heap.

كوّم *kawwim* **1** /vt/ to heap in piles, pile. *niḥammil il-ɋamḥ[a] ɛag-gimaal wi-nkawwim-u fil-gurn* we transport the wheat by camel and pile it up on the threshing floor. ‖*ḍarab-u ɛalɋa kawwim-u* he floored him. **2** /vi/ to pile up, accumulate. *ʕif-fuɤl[i] mkawwim ɛalayya* work is piling up on me. -vn *takwiim*; ava/pva *mikawwim*.

اتكوّم *ʕitkawwim* or *ʕikkawwim* /vi/ to pile up, be accumulated. *kaan ḥaqq-i ṭaradt-u-hum ʕawwil ma tkawwimit il-ʕugra ɛaleehum* I should have thrown them out as soon as their back rent began to accumulate. -ava *mitkawwim*.

ك و م ى

كومى *koomi* /n/ **1** an Egyptian card game (known also as *baṣra*, q.v., and *ʕil-waad yiquff*). **2** seven of diamonds.

ك و ن

كان *kaan (u)* /vi; the following variants frequently occur: 1st sing *kutt*, 2nd sing masc *kutt*, 2nd sing fem *kutti*, 2nd pl *kuttu*, 3rd sing fem *kaat*/ **1** to be, exist. *da ɀayy illi ykuun beeni w-beenu taar* he acts as if there were a feud between us. *koon-i ʕaqɛud quddaamak da miʃ ɛeeb* the fact of my sitting in front of you is not wrong. *koon if-ʃiik fi-ʕiid-i da ma-yikfii-ʃ* the cheque's being in my hand is not enough. ‖ *ʕayyuha maxluuqin kaan* any human being. - *ʕilli kaan kaan* what's done is done (and cannot be undone). **2a** /with copulative function/ to be. *ḥayat-ha maɛaa ḥa-tkuun saɛiida* her life with him will be happy. *ʕiza kaan da ṣaḥiiḥ* if this is right. **2b** to be situated (in place or time). *ʕil-beet bitaaɛ-u kaan gamb[i] bet-na* his house was next to ours. **3** auxiliary verb in perfect tense to form **3a** pluperfect. *kaan ɛamal il-waagib lamma ruḥt-i-lu* or *kaan ɛaamil il-waagib lamma ruḥt-i-lu* he had done his homework when I went to see him. **3b** continuous or habitual past. *kaan bi-yiɛmil il-waagib lamma ruḥt-i-lu* he was doing his homework when I went to see him. *kaan bi-yiɛmil il-waagib lamma kunt[i] b-aruḥ-lu* he usually did his homework when I went to see him. **3c** inchoative future. *kaan ḥa-yiɛmil il-waagib lamma ruḥt-i-lu* he was going to do his homework when I went to see him. **3d** a hypothetical past conditional. *law kunt[i] giit* if you had come. *law kunt[i] f-makaan-ak* if I had been you. **4** auxiliary verb in the imperfect tense to form **4a** future perfect. *ḥa-ykuun ɛamal il-waagib lamma ʕaruḥ-lu* or *ḥa-ykuun ɛaamil il-waagib lamma ʕaruḥ-lu* he will have done his homework when I go to see him. **4b** habitual future perfect. *bi-ykuun ɛamal* (or *ɛaamil*) *il-waagib lamma b-aruḥ-lu* he will usually have done his homework when I go to see him. **4c** continuous or habitual future. *ḥa-ykuun bi-yiɛmil il-waagib lamma ʕaruḥ-lu* he will be doing his homework when I go to see him. *bi-ykuun bi-yiɛmil il-waagib lamma b-aruḥ-lu* he will usually be doing his homework when I go to see him. **4d** hypothetical future conditional. *law tikuun ḥa-tiigi* if you were to come. -vn *koon*; ava *kaayin*.

كون *koon* **1** /n pl *ʕakwaan*/ cosmos, universe. *ya-xi ɛaayiz tiṣallaḥ il-koon* well my friend, do you want to reform the world?! **2**: *ragiiɛ ik-koon* rice husks.

كونى *kooni, kawni* /adj/ cosmic. *ʕaʃiɛɛa kawniyya* cosmic rays.

كائن *kaaʕin* /n pl *-aat*/ being, creature. *kull[i] kaaʕin ḥayy* every living creature.

كيان *kayaan, kiyaan* /n/ identity. *min yoom ma gibt-i-lak siirit xaḍra ʕinɋalab kayaan-ak* ever since I told you all about Khadra you've been a different person. ‖*bi-yuʃɛur bi-kayaan-u maɛaak* he feels important when he's with you. - *baɋaa-li kayaan* I felt important. - *raagil lu kayaan fil-mugtamaɛ* a man of standing in society. - *raagil maali kayaan-u* a man worthy of his position.

مكان *makaan* /n pl *ʕamaakin*/ place, locality, area. *ḥa-nxaṣṣaṣ makaan mustaqill[i] lil-busṭa* we'll allot a separate place for the mail. *ʕiɛdil il-ḥaaga makan-ha* put the thing in its (proper) place. *xud makaan-ak [athl]* on your mark! *bi-yiɛraf makan-ha* he knows where she is. *law kunt[i] makaan-ak* if I were (or, had been) in your place. *ʕiɛraf makaan-ak* know your place!

مكانة *makaana* /n/ (high) position, standing, rank.

كوّن *kawwin* /vt/ to give existence to, form. *ɛaayiz ʕakawwin firɋa musiqiyya* I want to set up a musical troupe. *ʕif-fubbaan illi ɀayy[i] ḥalat-na lissa bi-ykawwinu nafs-u-hum* young men like us are still seeking to establish themselves. -vn *takwiin*; ava *mikawwin*; pva *mukawwan, mikawwan*.

تكوين *takwiin* /n/ composition, formation. *takwiin il-ʕarḍ* composition of the earth. ‖*sifr it-takwiin* the Book of Genesis.

مكوّن *mikawwin* /n pl *-aat*/ component, ingredient, constituent.

اتكوّن *ʕitkawwin* or *ʕikkawwin* /vi/ to be formed, be made up. -iva *mitkawwin*.

استكان *ʕistakaan* /vi/ to resign oneself. *ʕistakaanit lil-waḍɛ* she resigned herself to the situation. -vn *ʕistikaana*; ava *mistakiin*.

ك و ه

كوه *kuuh* <Fr *coup*> /n pl *-aat*/ turn, go (in cards).

‖*ma txuff' maʕaana fik-kuuh* do join us! - *ʃinta miʃ maʕaana fik-kuuh* you don't follow us, you're not in tune with us.

ك و ى

كوى *kawa (i)* /vt/ **1** to iron, press. *min ʃimta kunti b-tikwi l-milayaat* since when have you been ironing sheets? **2** to straighten (hair) with curling tongs. **3** to mark by burning, brand. **4** to burn out, cauterize. *ʃif-faṭṭa tikwi g-garḥ* chilis cauterize the wound. **5** to sting, burn. *ʒamal fiyya faṣl' kawaa-ni* he played a dirty trick on me. - vn *kawy, kawa, kayy, kawayaan*; ava *kaawi*; pva *makwi*.

كوى *kawa*[3] /vn/ ‖*bil-ɣala wik-kawa* at painfully exorbitant prices, as in *baʕa l-bayaaʕ bil-ɣala wik-kawa* tinning has become outrageously expensive.

كاوى *kaawi* /adj/ caustic. *ṣooda kawya* caustic soda.

كاوية *kawya* /n pl *-aat*/ soldering iron.

كوّاية *kawwaaya* /n pl *-aat*/ = *kawya*.

مكوى *makwa* /n pl *makaawi*/ **1** iron, flat iron. **2** press (for clothes etc.). **3** (pair of) curling tongs. — /no pl/ **4** ironing, clothes ready to be ironed, or just ironed.

مكوجى *makwagi* /n pl *-yya*/ one whose trade is ironing clothes.

اتكوى *ʃitkawa* or *ʃikkawa* /vi/ passive of *kawa*. - iva *mitkiwi*.

انكوى *ʃinkawa* = *ʃitkawa*. - iva *minkiwi*.

ك و ى ت

الكويت *ʃil-kuweet, ʃil-kiweet, ʃik-kiwiit* /prop n/ Kuwait.

كويتى *kuweeti* **1** /adj */ pertaining to Kuwait. **2** /n * and pl *kawayta*/ a Kuwaiti.

كوّت *kawwit* /vt/ to Kuwaiti-ize. - vn *takwiit*; ava/pva *mikawwit*.

اتكوّت *ʃitkawwit* or *ʃikkawwit* /vi/ to be or become Kuwaiti-ized. - ava/iva *mitkawwit*.

ك و ى س see [2] ك ى س: *kuwayyis, kiwayyis*

ك ى ا ك

كياك *kiyaak* (also *kiyahk*) <Copt> /n/ fourth month of the Coptic year (early December to early January). *kiyaak ṣabaaḥ-ak misaa-k yixalli faṭuur-ak huwwa ʕafaa-k* jingle concerning the shortness of daytime during the month of *kiyaak*.

ك ى ب see ء ك ى ا ب: *ʃikyaab*

ك ى ب ر

كيبر *kiibar* <Engl>: *gool kiibar [soccer]* goalkeeper, goalie.

(ك ى ت)

كيت *keet: keet wi-keet* this and that. *ʔaalu ʕaleeha keet wi-keet* they said this and that about her.

كيت *kiit* <Fr *quitte*> /adv/ even, quits (in gambling).

ك ى ح

كاح *kaaḥ (i)* /vt/ **1** to tease. *baṭṭal tikiiḥ ʃuxt-ak iṣ-ṣuɣayyara* stop teasing your little sister! **2** to bother, irritate. *fii dimmil fi-kitf-i kayiḥ-ni* I've got a boil on my shoulder that's been bothering me. - vn *keeḥ, kayaḥaan*; ava *kaayiḥ*.

كيحة *keeḥa* /inst n, pl *-aat*/ a teasing.

كيّاح *kayyaaḥ* **1** /adj */ given to teasing. **2** /n */ a perpetual tease.

اتكاح *ʃitkaaḥ* or *ʃikkaaḥ* /vi/ **1** to be teased. **2** to be bothered, be irritated. - iva *mitkaaḥ*.

انكاح *ʃinkaaḥ* = *ʃitkaaḥ*. - iva *minkaaḥ*.

كايح *kaayiḥ* /vt/ to tease persistently, *ʃilḥaʔi ya maama faṭḥi ʕammaal yikaayiḥ if-faɣɣaala* mummy, mummy, Fathi keeps teasing the maid! - vn *mikayḥa*; ava *mikaayiḥ*.

اتكايح *ʃitkaayiḥ* or *ʃikkaayiḥ* /vi/ to be teased persistently. - iva *mitkaayiḥ*.

ك ى د see also [1] ء ك د

كاد *kaad (i)* /vt/ **1** to spite, thwart. *yalla nfarfiʃ wi-nkiid-u* let's go and have a good time and spite him. **2** to vex, annoy. *kidt" ḥamaat-i b-ʒuraaṭ-i [prov]* (I annoyed my mother-in-law with my farting) ≈ I cut my nose off to spite my face. - vn *keed*; ava *kaayid*.

كيدة *keeda* /inst n, pl *-aat*/ a spiteful act. *ḥ-aruuḥ bil-keeda fiiku* I'll go if only to spite you!

كيّاد *kayyaad* /adj */ spiteful.

مكيدة *makiida* /n pl *makaayid*/ **1** plot, intrigue, scheme. **2** trap.

مكياد *mikyaad* /n pl *makayiid*/ penis (in the jargon of homosexuals).

اتكاد *ʃitkaad* or *ʃikkaad* /vi/ **1** to be spited, be thwarted. **2** to be vexed, be annoyed. - iva *mitkaad*.

انكاد *ʃinkaad* = *ʃitkaad*. - iva *minkaad*.

كايد *kaayid* /vt/ to play malicious tricks on, spite. *waḥda ʕamalit da mkayda fiiha* some woman did that to spite her. - vn *mikayda*; ava *mikaayid*.

اتكايد *ʃitkaayid* or *ʃikkaayid* /vi/ passive of *kaayid*. - iva *mitkaayid*.

ك ى ز ر
كيزر *kayzar* /coll n/ bread rolls.

ك ى س [1]
كيس *kiis* /n pl *kiyaas, ʔikyaas, ʔakyaas*/ **1** sack, bag. *ʔakyaas mixaddaat* pillow cases. *kiis dahab* a purse of gold. *kiis naylun* polythene bag. *kiis filuus* (lady's) money purse, change purse. ‖*kiis duhni [path]* sebaceous sac. **2** bath mitt of coarse wool.
كيسة *kiisa* /n pl *-aat*/ little sack or bag.
كيّس *kayyis* /vt/ **1** to massage and scrub (s.o.). **2**↓ to save (money). *raagil baxiil bi-yiqbaḍ filuus wi-ykayyis-ha* he is a miner who gets money and stores it up. - vn *takyiis*; ava *mikayyis*.
مكيّس *mikayyis* /adj */ rich, wealthy.
مكيّساتى *mikayyisaati* /n pl *-yya*/ public bath attendant who massages and scrubs patrons.
اتكيّس *ʔitkayyis* or *ʔikkayyis* /vi/ **1** to be massaged and scrubbed. **2** to be saved (of money). - iva *mitkayyis*.

ك ى س [2]
كياسة *kiyaasaʔ* /n/ tact, diplomacy.
كواسة *kawaasa* /n/ niceness, excellence. *ʔin-nibiit da ʔaaxir kawaasa* this wine is top-notch.
كويّس *kuwayyis, kiwayyis* **1** /adj */ nice, good, fine. *raagil kuwayyis* a good man. *raagil kuwayyis fi-fuvl-u* a man who is good at his work. *ʔirfeen kiwayyisiin* a good sum of money. *maʃy-a-ha miʃ kuwayyis* her comportment is not nice. *ʔizzayy-ak. - kuwayyis il-ḥamdu lillaah* 'How are you?' 'Fine, thanks.' **2** /adv/ well. *ʔana ʕarf-u kwayyis* I know him well.

ك ى س [3]
كيس *kees* <Fr *caisse*> **1** /n pl *-aat*/ pay desk, cashier's desk. **2** /interj/ call by shop assistant for sold merchandise to be taken for wrapping and collection by customer.

ك ى ش
كيشة *kiiʃa* /adj invar/ spineless. *raagil kiiʃa* spineless man, jellyfish type.

ك ى ف
كيف *keef* /n/ **1** preference, liking, inclination. *ma-ʕandii-ʃ keef lis-siima l-lelaa-di* I'm in no mood for the cinema this evening. *ʕandu keef yiʃrab nibiit* he feels like drinking wine. *ʕala keef-ak* as you like. ‖*nisiib id-dinya timʃi ʕala kef-ha* ≈ we'll let the world go hang! - *ʔinta w-keef-ak* it's up to you. - *huwwa b-keef-ak illi b-yiigi hina* is it up to you who comes here? **2** addiction. – /pl *kuyuuf*/ **3** narcotic.
كيف *kiif* /interrog adv/ *[non-Cairene]* how? *ʔig-gaww[i] b-yiʕmil kiif* how's the weather doing? *ʔabuu-k ʕaamil kiif* how's your father?
كيفيّة *kayfiyya* /n/ manner, way. *nikkallim ʕan kayfiyyit ʕamal il-kunaafa* let's talk of how *kunaafa* is made.
كيّف *kayyiif* /n pl *kayyiifa*/ **1** buff, enthusiast. *kayyiif qahwa* a coffee buff. **2** connoisseur, sophisticated devotee. *kayyiif mazziika* a devoted music lover.
كيّف *kayyif* /vt/ **1** to give pleasure to. *ʔaʕraf ʔakayyif iz-zibuun* I know how to make the customer happy. *ʕaawiz mara mitwaddika tkayyif-u w-tibsiṭ-u* he wants an experienced woman who can please him in every way. **2** to adjust, adapt. *laazim tiʕraf tikayyif nafs-ak fi-maʕiifit ig-geef* you must learn to adapt yourself to army life. - vn *takyiif*; ava/pva *mikayyif*.
تكييف *takyiif* /n/ adaptation, adjustment. *takyiif hawa* air conditioning.
مكيّف *mukayyif* /n pl *-aat*/ **1** narcotic. **2** air conditioner.
مكيّفاتى *mikayyifaati* /n pl *-yya*/ hedonist, epicurean.
اتكيّف *ʔitkayyif* or *ʔikkayyif* /vi/ **1** to be given pleasure. **2** to be adapted, be adjusted. **3** to adapt oneself. *naas ma-tkayyifit-ʃ[i] maʕa l-mugtamaʕ* people who have not adapted themselves to society. - ava/iva *mitkayyif*.

ك ى ك [1]
كيك *keek* <Engl> /coll n/ small cake(s).
كيكة *keeka* /n pl *-aat*/ **1** type of plain cake, sometimes containing raisins or jam. **2** blank, block (of plastic or other raw material to be pressed or stamped by a machine). **3** *[mil]* mess tin.
كيكاية *kekaaya* /unit n, pl *-aat*/ a small cake.

ك ى ك [2] see ك ى ا ك : *kiyaak*

ك ى ل
كيل *keel* /n/ volume, measure. *kaan laban maxʃuuf wi-kamaan il-keel naaqiṣ* the milk was adulterated and the amount was short too.
كيلة *keela* /n pl *-aat*/ **1** dry measure of 16.72 litres, being one-twelfth of an ardeb. **2** container for measuring such a quantity.
كيّال *kayyaal* /n */ measurer (particularly of grains). *ʔil-kayyaal bi-ykayyil il-ɣalla* the man with the measure measures out the wheat. ‖*kull[i] fuula w-laha kayyaal [prov]* (every bean has its weigher) every Jack has his Jill.
مكيال *mikyaal* /n pl *makayiil*/ measuring container (for liquids).

كيّل *kayyıl* /vt/ to measure by volume. *kayyil talaata litr' laban* he measured out three litres of milk. -vn *takyiil*; ava/pva *mikayyil*.
اتكيّل *ʔitkayyil* or *ʔikkayyil* /vi/ to be measured by volume. -iva *mitkayyıl*.

ك ى ل و
كيلو *kiilu* <Fr *kılo*> /n pl *-waat*/ **1** kilogram. *kiilu laḥma w-nuṣṣ' kiilu ruzz* one kilogram of meat and half a kilogram of rice. **2** kilometre. *ʔil-ɛarabiyya btaɛt-u ɋaṭaɛit ʔarbiɛiin kiilu mbaariḥ* his car covered forty kilometres yesterday. **3** kilowatt. *daffaaya btaaɛit kiilu w-nuṣṣ* a one-and-a-half kilowatt heater.

[1] ك ى ن
كوكايين *kukayiin* <Fr *cocaïne*> /n/ cocaine.

اتكيّن *ʔitkayyin* or *ʔikkayyin* /vi/ to become high on cocaine. -ava *mitkayyin*.

[2] ك ى ن see ك و ن : *kayaan, kiyaan*

[3] ك ى ن see ك ا ن : *kaana*

[4] ك ى ن see ك ا ن ى : *kaani*

ك ى ن ا
كينا *kiina* <It *china*> /n/ **1** quinine. ‖*xaʃab kiina singaabi* cinchona, Peruvian bark. **2** tonic wine based on a cinchona extract.

ك ى ه ك see ك ى ا ك : *kiyahk*

ك ى ى see ك و ى

ل

ل

ل *li-* /w pron suff and independently: *liyya, lik/liik, liki/liiki, lu(h)/lii(h), laha/liha/liiha, lina/liina, lukum/liikum, luhum/liihum*; enclitically: *-li, -lak, -lik, -lu, -lha, -lna, -lkum, -lhum/* preposition indicating **1** direction in space or time. *baṣṣuu-li* they looked at me. *mil-ʕarḍ' l-fooq* from the floor up. *li-ʕaaxir in-nahaar* to the end of the day. *min sana l-sana* from one year to the next. **2** dative relationship. *qaluu-li kida* they told me so. *ḥubb-ak ʕinta liyya* your love for me. *xadt" ḥaaga lik-kuḥḥa* I took something for the cough. *ʕiʒmil-li maʒruuf* do me a favour. *rakkib laha n-nuur* he installed the electricity for her. **3** preferential or supportive relationship. *saybaa li-waaḥid taani* she has left him for another. *ʕiḥna liiha miyya fil-miyya* we're for it one hundred per cent! *yoom liik wi-yoom ʒaleek [prov]* one day is for you, another against you. ‖ *la liyya wala ʒalayya* minding my own business, doing no harm. **4** appertainment. *ma-lhaa-ʃ beet* she doesn't have a house. *huwwa-na liyya ɣeer-ak* do I have anyone but you? *kull' lukanda liiha mudiir* every hotel has a manager. *gidd-u l-ʕabuu* his paternal grandfather. *lu ʒafart iyyaam fi-maṣr* he's been in Egypt ten days. *lu talatt iyyaam ma-gaa-ʃ* he hasn't come for three days. **5** entitlement. *ma-ḥadd'-ʃ lu ʒandi ḥaaga* I don't owe anything to anyone. *liik ʒalayya tneen gineeh* I owe you two pounds. **6** ethical dative. *rawwaḥt' w-laqet-lak if-ʃaqqa kull-a-ha duxxaan* I returned home and, lo and behold, the flat was full of smoke! *ruḥt' katib-lak ḥittit diin fakwa* so I wrote up, I certainly did, a real bitch of a complaint!

¶ *li-ʕinn* /conj/ because. *ḍarabt-u l-ʕinnu narviz-ni* I hit him because he annoyed me.

ل *la-* **1** /conj, esp after v *xaaf* or imper/ lest. *ʕuskut la-yiḍrab-ak* be quiet lest he hit you. *ʕana xaayif la-ykuun il-mablaɣ miʃ ʒagb-ak* I'm afraid that the amount may not please you. **2** emphatic particle introducing strong assertion or oath. *ḥilfit la-tifarraq ʒeef ʒal-masakiin* she swore that she would distribute bread to the poor. *law kunt' ʕafargi la-kunt astiqiil miṣ-ṣubḥ* if I were a traffic cop I'd resign tomorrow for sure!

ل ا

لأ، لأ، لا *la* or *laa* or *laʕ* or *laʕʕa* /interj/ no! *ʕinta gayy. - la ʕana maʃɣuul* 'Are you coming?' 'No, I'm busy.' *ʕinta raayiḥ walla laʕ* are you going or not?

¶ *la* (or *laa) ... wala* /correl conj/ neither ... nor, as in *la ɣani wala faqiir* neither rich nor poor. *ma-fii-ʃ la qahwa wala faay* there's neither coffee nor tea. ‖ *la liyya wala ʒalayya* minding my own business. - for frozen contexts commencing with *la* (e.g., *la budd*), look up the second component. - *laʕʕa lamma tluʕʕ-(ak) [abus]* retort to *laʕʕa* when said in a brusque or offensive way.

لا- *la-* negative particle used in the formation of such compounds as *lasilki* /n/ wireless. *ʕil-laʃuʒuur↑* /n/ the unconscious. *ʕil-lamubalaah↑* /n/ apathy.

تلوّك *tiluʕʕ-ak: laʕʕa lamma tluʕʕ-ak [abus]* retort to *laʕʕa* (q.v.) when said in a brusque or offensive way.

ل ا ز و -

لازورد *laazaward* /n/ *[min]* lapis-lazuli.

(ل ا س)

لاسة *laasa'* /n pl *-aat*/ white wrapper of fine linen or silk worn around a cotton skullcap.

لاسه *laasa²↓* /n pl *-aat*/ gum (of the teeth). - also *lisa, lasa.*

ل ا ك ا

لاكا *laaka* <It *lacca*> /n/ lacquer, lac, shellac. *xaʃab laaka* lacquered wood.

ل ا ل see ل ل ى : *laala*

ل ا ك ن

لكن *laakin* (also *lakin, lakiin*) conj; w foll pron suff *lakinn-*/ but. ‖*ma-lakin-ſ* ≈ there are no ifs and buts about it.

ل ا م

لام *laam*[1] /fem n, pl *-aat*/ twenty-third letter of the Arabic alphabet. ‖*baqa laam ſalif* ≈ he got staggering drunk (since the ligature لا in Arabic script resembles a pair of legs crossed at the ankles).

ل ء and ل ء ء see ل ا : *laſ, laſſa, tiluſſ-ak*

ل ء ل see ل ل ى[1]

ل ء م[1]

لأم *laſam (u)* (also *laſan*) /vi/ to behave with deceit or cunning. *ſil-wad da laſam ɛaleena w-xallaa-na saddaqnaa* the kid pulled the wool over our eyes and made us believe him. *huwwa ɛammaal yilſum ɛafaan yaaxud il-ſarq' rxiiſa* he's trying all the sly tricks he can think of to get the land cheap. - vn *luſm*; ava *laaſim*.

لؤم *luſm* (also *luſn*) /n/ cunning.

لؤميّة *luſumiyya* (also *luſuniyya*) = *luſm*.

لئيم *laſiim* (also *laſiin*) /adj pl *liſaam, luſama* (also *liſaan, luſana*)/ cunning, sly. *raagil laſiim bitaaɛ maqaalib* a cunning man given to intrigues. *ſid-dunya laſiima* it's a wicked world.

ألأم *ſalſam* (also *ſalſan*) /el/ more/ most cunning or sly.

تلائم *ſitlaaſim*[1] (also *ſitlaaſin*) /vi/ to behave deviously or cunningly. *ſinta b-titlaaſim ɛaleena leeh - fakir-na mif fahmiin-ak* why are you being so devious with us? do you think we don't know what you're up to? - ava *mitlaaſim, mutalaaſim*↑.

استلئم *ſistalſim* (also *ſistalſin*) **1** /vt/ to consider cunning. **2** /vi/ to behave cunningly. - vn *ſistilſaam*; ava *mistalſim*.

ل ء م[2]

لائم *laaſim*↑ /vt/ to suit, be compatible with. *ſil-ſigraſaat illi tlaaſim ẓuruf-na* the procedures consistent with our circumstances. - vn *mulaſma*; ava *mulaaſim*.

لايم *laayim* /vt/ **1** to content, suit, (s.o.). *ɣab - ḥa-nruuḥ ɛafaan nilayim-hum bass* O.K. we'll go just to make them happy. ‖*layim-ha* take it easy! - *layim-ha ſwayya maɛaa* go easy on him! - *ſid-dinya ma-laymit-haa-ſ maɛaaya* things haven't gone my way. **2** to enable to get hold (of s.th.). *layim-ni ɛal-filuus* let me get my hands on the money! - vn *milayma*; ava *milaayim*.

تلائم *ſitlaaſim*[2]↑ /vi/ to be compatible, go well together. *ɣabiɣt-u ma-titlaſim-ſ' maɛa n-naas dool* he has no rapport with those people. - vn *talaaſum*; ava *mutalaaſim*.

تلايم *ſitlaayim* /vi/ passive of *laayim*. - iva *mitlaayim*.

التأم *ſiltaſam*↑ /vi/ to heal (of a wound). - vn *ſiltiſaam*; ava *miltiſim, multaſim*.

ل ء م م see ء م م ا : *la-ſimma, la-ſimman*

ل ء ن see ل ء م : *laſan, luſn, luſuniyya, laſiin, ſalſan, ſitlaaſin, ſistalſin*

ل ب ا ن

لبان *libaan*[1] <Copt> /n/ tow rope (of a Nile sailing boat).

ل ب ب[1]

لبّ *lubb*↑ /n/ **1** pith, pulp (of fruit etc.). **2** essence, essential part. *ɛirif lubb il-ḥikaaya ɛala ṭuul* he grasped the essence of the matter immediately. **3** mind, reasoning power.

لبّ *libb* /coll n/ edible seeds (mainly) of plants of the cucurbit family.

لبّة *libba* /n/ **1** /unit n, pl *-aat*/ a single *libb* seed. ‖*baṭṭiixa nuṣṣ' libba* a medium-ripe water-melon. — /pl also *libab*/ **2** base of the neck. **3** gold necklace (of the choker type).

لبّاية *libbaaya* = *libba* 1.

لبب *labab* /n/ martingale.

لبابة *libaaba, lubaaba* /n/ soft inner part (e.g., of bread).

لبيب *labiib* /adj pl *ſalibba*/ sensible. *kullu labiibin bil-ſiſaarati yafhamu [prov]* ≈ a nod for a wise man.

لبّب *labbib* /vt/ to make a gash in (a water-melon, to test its ripeness). ‖*labbib kirf-a-ha* he sliced open her belly (like a water-melon). - vn *talbiib*; ava/pva *milabbib*.

تلابيب *talabiib: ſil-mask' min* (or *fi-*) *talabiib(-u)* taking hold of (s.o.) by the front of his clothes.

اتلبّب *ſitlabbib* /vi/ to be incised with a gash (of a water-melon, to test its ripeness). - iva *mitlabbib*.

ل ب ب[2]

لبّ *labb (i)* **1** /vt/ *[slang]* to hit, whack. *ſil-buliṣ labb-u ɛalqa ḥilwa* the police gave him a good going-over. **2** /vi/ to quiver, shake. *ſil-miɛaddiyya bi-tlibb' taḥtiik*

the footbridge shakes under you. - vn *labb, lababaan*; ava *laabib*; pva *malbuub*.
اتلبّ *ʔitlabb* /vi/ *[slang]* to be hit, be whacked. - iva *mitlabb*.

ل ب ب ي ك see ل ب ي ¹: *labbay-k*

ل ب ت ر
لبتر *libitr* <Fr *pupitre*> /n/ music rack (of a piano).

ل ب خ ¹
لبخ *labax¹ (i)* /vt/ to perplex, confuse. - vn *labaxaan, labx, labxa*; ava *laabix*; pva *malbuux*.
لبخة *labxa* /n/ **1** /pl *-aat, libax*/ poultice. **2** /invar/ bungler, inept person.
ألبخ *ʔalbax* /el/ more/most inept.
اتلبخ *ʔitlabax* /vi/ to be or become perplexed or confused. *ʔitlabaxna labxit il-kilaab* we were at a complete loss. - ava/iva *mitlibix*.
لبّخ *labbax* /vi/ **1** to apply a poultice. *labbax ɛala l-xurraag li-ħadd¹ ma yistiwi* apply a poultice to the boil until it comes to a head. **2** to make a mess. *maafi tlabbax fiṭ-ṭiin leeh* why are you stomping about in the mud? *ʔil-walad da labbax fil-imtiħaan* that boy made a complete mess of the examination. - vn *talbiix*; ava *milabbax*.
¶ *labbax fik-kalaam* (1) to commit a solecism. (2) to speak rudely or offensively.
استلبخ *ʔistalbax* **1** /vt/ to con, dupe. **2** /vi/ to play the fool. - vn *ʔistilbaax*; ava/pva *mistalbax*.

ل ب خ ²
لبخ *labax²* /coll/ lebbek tree(s) (Acacia lebbek).

ل ب د ¹
لبد *labad* or *libid (a, i)* /vi/ **1** to lurk, lie in ambush. *labid-lu fid-dura* lurking in the maize, waiting to get him. ‖*zayy it-tiɛbaan yuqruṣ wi-yilbad* like a snake he strikes and then lies low (said of one who is secretly malicious). **2** *[slang]* to hang about, outstay one's welcome. - vn *labadaan*; ava *laabid*.
لبدة *libda¹* /n pl *libad*/ blind, hide (for shooting).
اتلبّد *ʔitlabbid¹* /vi/ **1** to lurk, lie in ambush. **2** *[slang]* to hang about, outstay one's welcome. - ava *mitlabbid*.
استلبد *ʔistalbad↓*, *ʔistalbid = labad*. - ava *mistalbid*.
استلبّد *ʔistilabbad, ʔistilabbid = ʔistalbad*. - ava *mistilabbid*.

ل ب د ²
لبدة *libda²* /n pl *libad*/ *[obsol]* cap of heavy felt (worn by Egyptian peasant men).
لبودي *libuudi* or *lubuudi* /n pl *-yya*/ maker of felt caps.
لبّاد *libbaad* /n/ felt.
لبّادة *libbaada* /n pl *-aat*/ **1** /unit n/ a piece of felt. **2** saddle pad.
لبّد *labbid* /vt/ **1** to felt (wool, hair, grass etc.). **2** *[metal]* to sinter. — /vi/ **3** to become matted. *faɛr-a-ha xifin wi-mlabbid zayy iṣ-ṣuuf* her hair is coarse and matted like fleece. - vn *talbiid*; ava/pva *milabbid*.
اتلبّد *ʔitlabbid²* /vi/ **1** to be felted (of wool, hair, grass etc.). **2** *[metal]* to be sintered. - iva *mitlabbid*.

ل ب ر و
لبرو *libru* <It *libero*>: *[naut] muxṭaaf libru* anchor a-weigh!

ل ب س ¹
لبس *libis (i)* /vt/ **1** to don, put on, get dressed in. *ʔilbis huduum-ak* put on your clothes. *libsit is-saaɛa* she put on the watch. ‖*libis xazuuq* to fall for a dirty trick. **2** to wear, be dressed in. *ʔana b-albis badla ṭuul in-nahaar* I wear a suit all day. **3** to possess (of a demon). *ʔis-sawwaaq malbuus* the driver is possessed by the Devil. — /vi/ **4** to get dressed (in clothes suitable for going out). *ma-tinzil-ʃ if-faariɛ bil-bijaama - laazim tilbis* don't go out in the street in your pyjamas - you must be properly dressed. **5** to fit. *ʔig-gawanti da b-yilbis fi-ʔiid-i* these gloves fit me. **6** to strike home (of a blow). *taalit marra ḍ-ḍarba libsit* at the third try the blow struck home. *ɛarabiyya libsit fiyya fil-garaaf* a car ploughed into me in the garage. *ʔil-koora libsit fig-goon* the ball slammed into the goal. ‖*ʔil-fikra libsit fi-dmaaɣ-u* he became obsessed by the idea. **7** *[naut]* to run aground. - vn *libs, labasaan*; ava *laabis*; pva *malbuus*.
لبس *libs¹* **1** /vn/ ‖(*ʔif-fiwaal*) *kaan lu libs* (the sack style)) used to be worn, it had its time as a fashion. **2** /n/ clothing, dress, attire. *libs¹ koora* soccer outfit. *libs³ ɛaskari* police uniform.
ملبوسات *malbusaat* /pl n/ clothes, clothing.
لبس *labs↑* /n/ misunderstanding. *ħaṣal labs¹ fil-mawquuɛ* some confusion arose in the matter.
لبسة *labsa* /pl *-aat*/ instance noun of *libs*. *yadoobak labsiteen wi-yittaakil* hardly two wearings and it gets frayed. *gat-laha labsa* she became possessed.
لباس *libaas* /n pl *ʔilbisa, libʔsa*/ **1** underpants, drawers. **2** motif in tent appliqué work (see Pl.H, 14).
لبوس *lubuus* /n/ **1** /coll/ suppositories. **2** /pl *-aat*/ suppository.

لبّيس *labbiis* /pl *labbiisa*/ **1** /n/ *[obsol]* valet, body servant. **2** /adj/ well-dressed, elegant, having dress-sense.
لبّيسة *labbiisa* /n pl *lababıs/* **1** (also *labbiisit gazma*) shoehorn. **2** cap, cover (e.g., for a pen).
ملابس *malaabis* /pl n/ clothes, clothing.
اتلبس *ʔitlabas* /vi/ **1** to be worn. ‖*ma-yitlıbis-ʃ' ɛalee hduum* clothes are not worn on it (said, e.g., of something painful), as in *ʔik-kalam-da ma-yitlibis-ʃ' ɛalee huduum* such talk causes much pain. **2** to be possessed by a demon. - iva *mitlibis*.
لبّس *labbis* /vt/ **1** to dress. *labbıst-u ʕaḥmar* I dressed him in red. ‖*labbis ıl-xunfısa tibqa sitt in-nisa* and *labbis il-buuṣa tibqa ɛaruusa [prov]* ≈ clothes make the person. **2** to cause to wear. *labbist-a-ha l-balṭu* I made her wear the coat. ‖*labbısuu l-ɛımma* they fooled him. - *labbist-u ṭ-ṭarabeeza* I crowned him with the table. - *labbisuu-ni xazuuq* they put a dirty trick over on me. **3** to fit. *ʔil-kababgi labbis il-laḥma fis-siix* the *kababgi* fitted the meat on the skewer. - vn *talbiis*; ava/pva *milabbis*.
تلبيسة *talbiisa* /n pl *talabiis/* **1** instance noun of *talbiis*. **2** set of false teeth. **3** belly-dancer's outfit. **4** *[mech]* plain bearing. **5** backing of certain designs in tent appliqué work (see Pl.H, 28).
ملبّس *milabbis* **1** /adj/ fatty (meat). **2** /coll n/ sugar-coated almonds, (loosely also) any hard sweets or candies.
ملبّسة *milabbisa* /unit n, pl *-aat/* a sugared almond, (loosely also) a hard sweet or candy.
ملبّسايه *mılabbisaaya = milabbisa*.
اتلبّس *ʔitlabbıs* /vi/ **1** passive of *labbis*. **2** to take possession (of a demon). *ʔis-sawwaaq if-fiṭaan mıtlabbis bii* the Devil has possessed the driver. - ava/iva *mitlabbis*.
تلبّس *talabbus* /n/ *[leg]* flagrante delicto.
متلبّس *mutalabbis* /adj */ *[leg]* in flagrante delicto, red-handed.
التبس *ʔiltabas*↑ /vi/ to become confused or mixed (with s.th. else) in such a way as to give a false impression. *ʔiṣ-ṣuwar iltabasit bi-baɛḍ* the pictures were superimposed on each other. *ʔiltabas ɛalee ʔil-ʔamr* he misinterpreted the situation. - vn *ʔiltibaas*; ava *miltibis, multabis*.

ل ب س ²

لبس *libs²* /n/ a carp-like Nile fish (Labeo niloticus and other varieties).
لبيس *libiis* <Copt> = *libs²*.

ل ب س ا ن

لبسان *labsaan* <P *labsân*> /n/ black mustard.

ل ب ش

لبش *libʃ* <Copt> /coll n/ **1** bundle(s) (of certain plants, e.g., carrots, onions, sugar cane). **2** bushy growth put out by plants of the cucurbit family. **3** *[constr]* (concrete) slab foundation.
لبشة *libʃa* /pl *-aat/* unit noun of *libʃ*. *ʔil-baṭṭiixa ma-tikbar-ʃ' ʔilla f-libʃıt-ha [prov]* ≈ a fruit cannot grow off the tree.
لبشاية *libʃaaya = libʃa*.
لبّش *labbiʃ* /vt/ **1** to incapacitate. *ʔır-rumatizm' labbiʃ riglee-ha* rheumatism left her unable to walk. *ʔıl-bard' mlabbiʃ gism-i* the cold is paralysing me. *ṣabaḥt' ɛenay-ya mlabbiʃa* I got up in the morning unable to open my eyes. **2** to bundle and tie (certain plants, e.g., carrots, onions, sugar cane). – /vı/ **3** to become bushy (of plants of the cucurbit family). - vn *talbiiʃ*; ava/pva *milabbiʃ*.
اتلبّش *ʔitlabbiʃ* /vi/ **1** to be incapacitated. *ʔitlabbiʃt' mil-xoof* I was paralysed with fear. **2** to be bundled and tied. - iva *mitlabbiʃ*.

ل ب ص

لبص *labaṣ (u)* /vi/ **1** to jerk, dart, start. *ʔıs-ʃamak ɛammaal yilbuṣ fil-mayya* the fish are darting through the water. *ʔiftakaru l-walad maat lakinnu baɛd' ʃwayya labaṣ wi-ḥarrak gısm-u* they thought the boy had died but after a while he quivered and moved his body. **2** to play a trick. - vn *labṣ, labaṣaan*; ava *laabiṣ*.
لبص *libiṣ* /adj */ evasive, deceptive, deceitful.

ل ب ط

لبط *labaṭ¹ (u)* /vt/ to knock to the ground. - vn *labṭ*; ava *laabiṭ*; ava *malbuuṭ*.
لبطة *labṭa* /inst n, pl *-aat/* a knock that fells to the ground. ‖*malbuuṭ labṭa sooda* in an awful dilemma, going through a terrible crisis.
لبط *libiṭ* /adj * and pl *labaṭ/* contentious, trouble-seeking, bullying.
لبط *labaṭ²* /n/ *[path]* vitiligo.
ألبط *ʔalbaṭ* /adj, fem *labṭa*, pl *lubṭ/* **1** piebald (of animals). **2** afflicted with vitiligo (of humans).
لباطة *labaaṭa* /n/ contentiousness, trouble-seeking, bullying.
اتلبط *ʔitlabaṭ* /vi/ to be knocked to the ground. - iva *mitlibiṭ*.
لبّط *labbaṭ* /vt/ **1** to splash, spatter, blot. **2** to smear, soil. - vn *talbiiṭ*; ava/pva *milabbaṭ*.
اتلبّط *ʔitlabbaṭ* /vi/ **1** to be splashed, be spattered, be blotted. **2** to be smeared, be soiled. - iva *mitlabbaṭ*.

لابط *laabiṭ* /vt/ to wrestle with. - vn *milabṭa*; ava *milaabiṭ*.
اتلابط *ʔitlaabiṭ* /vi/ to wrestle (with one another). - ava *mitlaabiṭ*.

ل ب ع
لبع *labaɛ (a)* /vt/ **1** to startle, scare. *ʔiskut labaɛt il-walad wi-xalleet-u ysarrax* stop that! you've given the child a fright and made him cry. **2** to hustle, rush. *maa-lak malbuuɛ kida* what are you rushing like that for? - vn *labɛa, labaɛaan*; ava *laabiɛ*; pva *malbuuɛ*.
اتلبع *ʔitlabaɛ* /vi/ **1** to be startled, be frightened, be scared. **2** be hustled, be rushed. - iva *mitlibiɛ*.

ل ب ق
لبق *labiq*ˀ /adj */ well-spoken, polished in manners and speech.
لباقه *labaaqa*ˀ /n/ polish of manners and speech.

ل ب ك
لبك *labak (u, i)* /vt/ **1** confuse, muddle. *ʔil-walad kaan bi-yitkallim kiwayyis wi-nta lli labakt-u w-xalleet-u yixlaṭ* the boy was speaking perfectly well but you got him in a muddle and made him slip up. **2** to cause to be lumpy. *ruzzᵢ malbuuk* lumpy rice. - vn *labk, labakaan, labka*; ava *laabik*; pva *malbuuk*.
اتلبك *ʔitlabak* /vi/ **1** to be confused, be muddled. **2** to become or be made lumpy. - ava/iva *mitlibik*.
لبّك *labbik* **1** /vt/ to cause to be lumpy, gummy or sticky. *labbikit ir-ruzz* she made the rice lumpy. ‖*labbik il-mawquuɛ* he made things complicated. **2** /vi/ to become lumpy, gummy or sticky. *ʔil-ɛagiin milabbik* the dough is lumpy. *makaroona mlabbika* gummy pasta. - vn *talbiik*; ava/pva *milabbik*.
اتلبّك *ʔitlabbik* /vi/ to be made or become lumpy, gummy or sticky. - vn *talabbuk*; ava/iva *mitlabbik*.
تلبّك *talabbuk* /vn/ ‖*talabbuk fil-miɛda* indigestion.

ل ب ل ب
لبلب *lablib* **1** /vi/ to grow fresh and supple (of plants). *ʔil-quṭnᵢ lablib lamma ʔirib* the cotton plants were invigorated when they were watered. **2** /vt/ *[slang]* to cane, beat (with a pliant stick). - vn *lablaba*; ava/pva *milablib*.
لبلب *liblib* /adj * and invar/ *[slang]* quick-witted and talkative. *naadi l-waad il-liblib illi hnaak da* call that boy over there who's so full of quick answers. *liblib fi-* fluent in, as in *ʔil-bintᵢ di liblib fil-faransaawi* this girl is fluent in French. *zayy il-liblib* fluently, as in *bi-titkallim ʔingiliizi zayy il-liblib barḍu* she speaks English fluently too.
لبلاب *liblaab* /n/ *[bot]* hyacinth bean (Dolichos lablab).
لبلوب *labluuḃ* /n pl *labaliib*/ **1a** tendril. **1b** switch, whippy stick. **1c** *[constr]* lath. **2** *labluub il-wirk* inner thigh **3** = *liblib*.
اتلبلب *ʔitlablib* /vi/ **1** to bend. *ʔil-xarazaana ṭariyya wi-b-titlablib* the cane is supple and bends easily. **2** *[slang]* to be caned. - ava/iva *mitlablib*.

ل ب ن ¹
لبن *laban* /n/ **1** milk. *laban ḥaliib* fresh milk. *laban ḍarb* buttermilk. *laban raayib* curdled milk. *sinaan il-laban* milk teeth. ‖*nahaar-ak laban* may your day be fine! *-ṣaafi ya laban* formula of reconciliation after a quarrel. *- ʔummᵢ laban [bot]* spurge. **2** *[coarse]* **2a** semen, come. ‖*filmᵢ laban* a sexy film. *- leela laban* an orgiastic evening. *- ʔabu laban* insulting form of address or reference to the driver of a horse-drawn carriage. **2b** vaginal secretions produced during sexual excitement, love juice.
ألبان *ʔalbaan* /pl n/ **1** types of milk. ‖*muntagaat ʔalbaan* dairy products. **2** dairy, shop selling dairy products.
لبنى *labani* /adj/ **1a** pale blue. **1b** milky (of colour). **2** sucking (of a young animal).
لبّان *labbaan* /n * and pl *labbaana*/ milkman, milk-seller.
لبّانه *labbaana* /n pl *-aat*/ **1** milk jug. **2** milkmaid.
لبّانى *labbaani* /invar/ **1** /adj/ sucking (of a young animal). *ɛigl labbaani* a nursing calf. **2** /n/ *[butcher]* young veal.
لبّين *libbeen* /n/ wild lettuce, acrid lettuce (Lactuca virosa).

ل ب ن ²
لبان *libaan*² /n/ chewing gum. *ɛala wiff-ak libaan ya maddaaʏ il-libaan [prov]* ≈ whatever you do, it will show. ‖*libaan dakar* resin of frankincense, olibanum. *- libaan nitaaya* a natural chewing gum.
لبانة *libaana* /unit n, pl *-aat*/ a piece of chewing gum, a piece of frankincense. ‖*libanit-ha zarɛa [prov]* she's a malicious gossip.
ملبن *malban* /n/ Turkish delight. ‖*fattaḥ ɛeen-ak taakul malban [prov]* ≈ keep alert and you'll gain the best prize. *- bintᵢ malban* a voluptuous girl.
لبّن *labbin* /vi/ to mumble, or talk in in a garbled fashion. - vn *talbiin*; ava *milabbin*.
¶ *labbin ɛala* to put the evil eye on (s.o., by talking about him).

³ ل ب ن see ل ب ا ن : *libaan'*

ل ب ن ا ن
لبنان *libnaan, lubnaan* /prop n/ Lebanon.
لبنانى *libnaani, lubnaani* **1** /adj */ Lebanese. **2** /n */ a Lebanese.

ل ب ن د
لبنده *labanda* <It *alla banda*>: *[naut] saqaala labanda* hard-a-port. *sangaq labanda* hard-a-starboard.

ل ب و
لبوة *labwa* /n pl *libaw*/ **1** lioness. **2** highly-sexed woman. see further under ل ب و ن

ل ب و ن see also ل ب و
لبونة *labwana* /n/ *[coarse]* **1** unseemly conduct. **2** demeanour or behaviour of a highly-sexed woman.
ملبونة *milabwina* /fem adj/ *[coarse]* highly-sexed.
اتلبون *ʔitlabwin* /vi/ **1** *[coarse]* to behave coarsely (of women). **2** *[abus]* to be troublesome or nagging (of men). - ava *mitlabwin*.

¹ ل ب ى
لبّى *labba* **1** /vt/ to comply with (a request). **2** /vi/ *[Isl]* to utter the formula beginning *labbay-ka ʔallaahumma labbay-k* ('I answer your call, O God', recited by Muslims on pilgrimage to Mecca, and by all Muslims after the prayers recited during *ʔil-ɛiid il-kibiir* and the three days following). - vn *talbiyya, talbiyaʔ*; ava *milabbi*.
التلبية *ʔit-talbiyya* /n/ *[Isl]* the formula beginning *labbay-ka ʔallaahumma labbay-k*.
لبّى *labbay: labbay-ka ʔallaahumma labbay-k* see *labba* 2.
اتلبّى *ʔitlabba* /vi/ to be complied with (of a request). - iva *mitlabbi*.

² ل ب ى
لوبيا، لوبية *lubya* <P *lûbiyâ*> **1** /coll n/ cow-pea(s), black-eyed pea(s) or bean(s) (Vigna sinensis, Vigna catjang, Dolichos lubia, Dolichos sesquipedalis). ‖*lubya sudaani* cajan pea(s), pigeon pea(s) (Cajanus indicus). **2** /adj invar/ fresh and young (of vegetables). *xiyaar lubya* young and crunchy cucumbers. *lubya ya figl' lubya [vendor's cry]* tender radishes! ‖*bint' lubya* a dishy girl. - *nahaar lubya* a lucky day.

ل ب ى ا
ليبيا *libya* /prop n/ Libya.
ليبى *liibi* **1** adj */ Libyan. **2** /n */ a Libyan.

ل ت ت
لتّ *latt (i)* **1** /vt/ to knead. *tirubb il-ɛagiin wi-tlitt-u* you beat the dough and knead it. ‖*ħikaaya maltuuta* an old story (i.e. something heard before). **2** *[slang]* to give a thrashing to. *ʕabuu-k ħa-ylitt-ak* your father will give you a good hiding. – /vi/ **3** to chatter, prattle. *qaɛadit tilitt' (fil-kalaam) maɛa l-mumarriḍaat* she sat chattering with the nurses. ‖*latt' w-ɛagn* endless chatter. - vn *latt, latataan*; ava *laatit*; pva *maltuut*.
لتّة *latta* /n pl *-aat*/ piece of kneaded dough. ‖*ʕiṭ-ṭiina min iṭ-ṭiina wil-latta mil-ɛagiina [prov]* ≈ like father, like son.
لتّات *lattaat* /n * and pl *lattaata*/ chatterbox.
اتلتّ *ʔitlatt* /vi/ **1** to be kneaded. **2** *[slang]* to be thrashed. - iva *mitlatt*.

ل ت ر
لتر *litr* (also *ritlʲ*) <Fr *litre*> /n pl *-aat*/ litre.

ل ت ر ي
لوتريّة *lutiriyya, lutariyya* <It *lotteria*> /n pl *-aat*/ lottery.

ل ت ز ا ن
لاتزان، لتزان *latazaan* (also *xafab latazaan*) /n/ whitewood planking. - also *laṭazaan*.
لاتزانة، لتزانة *latazaana = latazaan*. - also *tazaana, laṭazaana*.

ل ت م
لثام، لتام *litaam* /n pl *-aat, litíma*/ veil or cover (for the lower part of the face). *ħaraami laabis litaam* a thief wearing a scarf (or the like) over his face.
لثّم، لتّم *lattim* /vt/ **1** to veil or cover the lower face of. **2** to bind the jaw of (a corpse, to prevent it falling). - vn *taltiim*; ava/pva *milattim*.
اتلثّم، اتلتّم *ʔitlattim* /vi/ **1** to be veiled or covered (of the lower part of the face). **2** to be bound (of the jaw of a corpse). - iva *mitlattim*.

ل ت ى ن
لاتينى *latiini* /adj */ Latin. *ʔil-ħuruuf il-latiniyya* Latin characters. *ʔil-kanaayis il-latiniyya [Chr]* the churches following the Latin rite. ‖*ʔinta ħa-tkallim-ni latiini* don't speak to me in double-Dutch!

ل ث see ل س and ل ا س

ل ث م see ل ت م

ل ج ء

لجأ *lagaʃ (a)* /vi/ to resort, have recourse. *di ʃaaxir ḥaaga b-yilgaʃ laha* this is the last thing to which he resorts. - vn *luguuʃ*; ava *laagiʃ*; pva *malguuʃ*.

لاجئ *laagiʃ* /n */ refugee.

ملجأ *malgaʃ* /n pl *malaagiʃ*/ (place of) sanctuary, refuge, home, asylum. *malgaʃ ʃaytaam* orphanage. *malgaʃ ʒagaayiz* home for the aged.

ألجأ *ʃalgaʃ* /vt/ to cause to resort, cause to seek support. *ʃeeh illi ʃalgaʃ-ak lik-kidb* what made you resort to lying? - ava *milgiʃ*.

التجأ *ʃiltagaʃ* /vi/ to seek refuge, seek support, resort. *ʃiltagaʃt^{i} l-rabb-i-na* I asked God for help. *huwwa dayman miltigiʃ liihum* he's always trying to get support from them. - vn *ʃiltigaaʃ*; ava *miltigiʃ*.

ل ج ج

لجّ *lagg (i)* /vi/ to insist, nag. - vn *lagagaan, lagg*; ava *laagig*.

لجاجة *lagaaga* /n/ nagging.

ل ج ل ت -

لجلاتور *laglatoor* <poss Fr *régulateur*> /n pl *-aat*/ tuning key (of piano).

ل ج ل ج

لجلج *laglig* /vt and vi/ to cause to stutter. *ʃil-xaqqa lagligit-ni* the shock left me stuttering. - vn *laglaga*; ava/pva *milaglig*.

اتلجلج *ʃitlaglig* /vi/ **1** to be caused to stutter. **2** to stutter. - ava/iva *mitlaglig*.

ل ج م

لجام *ligaam* /n pl *ʃilgima, ligíma*/ bridle.

لجّم *laggim* /vt/ to bridle. *ʃiil is-sarg^{i} bass^{i} xalli l-ḥuṣaan milaggim* remove the saddle, but leave the horse bridled. *yilaggim-u rabb-i-na yoom il-ʔiyaama b-ligaam min naar* may Our Lord bridle him with a bridle of fire on the day of resurrection! - vn *talgiim*; ava/pva *milaggim*.

تلجيمة *talgiima* /n pl *-aat*/ headstall and reins of a bridle.

اتلجّم *ʃitlaggim* /vi/ **1** to be bridled. **2** to be dumbstruck, become speechless. *saaʕit ma faaf il-ʔaadi tlaggim* when he saw the judge he couldn't utter a word. - ava/iva *mitlaggim*.

ل ج ن

لجنة *lagna, lugna*↓ /n pl *ligaan, lugaan*↓/ **1** committee. **2** examination room in a school.

لجّن *laggin* /vt/ to appoint committees for. *ʃil-ḥukuuma lagginit il-mafruuʕ* the government assigned the project to a committee (or several committees). - vn *talgiin*; ava/pva *milaggin*.

اتلجّن *ʃitlaggin* /vi/ to be assigned to committee(s). - iva *mitlaggin*.

ل ح ح

لحّ *laḥḥ↑ (i)* /vi/ to insist. *laḥḥeet ʕalee yiigi maʕaana* I insisted he come with us. - vn *laḥḥ, laḥaḥaan*; ava *laaḥiḥ*.

لحوح *laḥuuḥ↑* /adj */ insistent.

لحّاح *laḥḥaaḥ↑* /adj */ insistent.

ألحّ *ʃalaḥḥ↑ = laḥḥ*. - vn *ʃilḥaaḥ*; ava *muliḥḥ*.

ملحّ *muliḥḥ↑* /adj/ pressing, urgent. *ḥikaaya muliḥḥa* an urgent matter.

ل ح د 1

لحد *laḥd* /n pl *luḥuud, luḥúda*/ underground chamber in which the corpse of someone important (or of anyone not wanting his bones removed from the site) is interred.

لحّاد *laḥḥaad* /n */ gravedigger.

لحّد *laḥḥad* /vt/ to entomb. - vn *talḥiid*; ava *milaḥḥad*.

اتلحّد *ʃitlaḥḥad* /vi/ to be entombed. - iva *mitlaḥḥad*.

ل ح د 2

إلحاد *ʃilḥaad↑* /n/ atheism.

ملحد *mulḥid↑* /n */ atheist.

ل ح س

لحس *laḥas^{1} (a)* /vt/ **1** to lick. *bi-tilḥas ṣawabiʕ-ha baʕd il-ʔakl* she licks her fingers after eating. *ruuḥ li-ʔumm-ak tilḥas-ak* (go to your mother and she'll lick you) ≈ run home to your mother (a patronizing and usually offensive remark). ‖*laḥas kalaam-u* he went back on his word, he broke his promise. - *bi-yilḥas il-laḥluuba* he's an audacious thief. - *ʔalḥas misann-i w-ʔabaat mihanni [prov]* (I'll lick my grindstone and sleep happy) ≈ better go without than get into debt. **2** to render temporarily blind (of a bright light, excessive reading etc.). **3** to deal (s.o.) a slap (especially, on the back of the neck). - vn *laḥs*; ava *laaḥis*; pva *malḥuus*.

لحس *laḥas^{2} (i)* /vt/ to drive crazy (often with pleasure). *ʃil-bint^{i} laḥasit-ni* the girl really made me flip. *ʕarabiyya tilḥis* a mind-blowing car. - vn *laḥas*; ava *laaḥis*; pva *malḥuus*.

ملحوس *malḥuus* /adj pl *malaḥiis*/ soft in the head, cuckoo.

أحلس ʔalḥas /el/ more/most touched, nutty or crazy.

لحّاس laḥḥaas /n */ **1** one who licks. **2** one who slaps. *ʔid-dafa ɛafa wil-bard' laḥḥaas il-qafa [prov]* warmth is health, cold is like a blow on the back of the neck.

اتلحس ʔitlaḥas¹ /vi/ passive of *laḥas¹*. - iva *mitliḥis*.

اتلحس ʔitlaḥas² /vi/ to be driven crazy or go crazy (often with pleasure, wonder etc.). *ʔitlaḥastᵃ ɛal-badla* I blew my mind over the suit. - ava/iva *mitliḥis*.

لحّس laḥḥas /vt/ to give to lick, give to suck. *ʔil-ʔumm' laḥḥasit ibn-a-ha ṣ-ṣuvayyar il-maṣṣaaṣa* the mother gave her little son a lolly to suck. *ʔil-walad da kibir ɛala t-talḥiis* that child is too big to be bottle-fed (or breast-fed). - vn *talḥiis*; ava/pva *milaḥḥas*.

اتلحّس ʔitlaḥḥas /vi/ **1** to be given to lick or suck. *ʔiṭ-ṭifl itlaḥḥas kitiir* the child was breast-fed (or bottle-fed) frequently (or for a long time). **2** to yearn (for, e.g., food). *qaaɛid yitlaḥḥas ɛal-ʔakl* he's sitting licking his lips in anticipation of the food. - ava/iva *mitlaḥḥas*.

ل ح س ن see ح س ن

لحسن laḥsan = *ʔaḥsan¹* 2.

ل ح ظ

لحظ laḥaẓ↑ *(a)* /vt/ to notice. - vn *laḥaẓaan*; ava *laaḥiẓ*; pva *malḥuuẓ*.

لحظ laḥẓ /n pl *ʔalḥaaẓ/ [poet]* glance, look. *ʔalḥaẓ-ha tigraḥ* (the arrows of) her glances wound.

لحظة laḥẓa /n pl *-aat/* moment. *fi-ʔaaxir laḥẓa* at the last moment. ‖*fi-laḥẓa waḥda* at one and the same moment. - *ʔaxbaar ʔaaxir laḥẓa* hot news.

ملحوظة malḥuuẓa /n pl *-aat, malaḥiiẓ/* note, comment, observation, remark.

لاحظ laaḥiẓ /vt/ **1** to notice, take note of. *laḥiẓt innuhum naas ṭayyibiin* I realized that they were kind people. -/the literary passive imperfect also occurs/ *yulaaḥaẓ ɛaleehum ʔinnuhum buxala* they are noted for being miserly. **2** to pay attention to. *laaḥiẓ iṭ-ṭabiix ɛan-naar* keep an eye on the food on the gas! - vn *mulaḥẓa*; ava *milaaḥiẓ*; pva *mulaaḥaẓ*↑.

ملاحظة mulaḥẓa /n pl *-aat/* observation, comment, remark.

ملاحظ mulaaḥiẓ /n */ overseer, superintendent, officer in charge.

اتلاحظ ʔitlaaḥiẓ /vi/ **1** to be noticed, be noted. **2** to be given attention. - iva *mitlaaḥiẓ*.

ل ح ف

لحاف liḥaaf /n pl *ʔilḥifa, liḥifa/* quilt. *ɛala qadd' lḥaaf-ak maddid riglee-k [prov]* (according to the size of your quilt, stretch out your legs) ≈ cut your coat according to your cloth.

لحّف laḥḥaf /vt/ *[agric]* to level off by hand (inundated land unreachable by the *lawwaaṭa*). - vn *talḥiif*; ava/pva *milaḥḥaf*.

اتلحّف ʔitlaḥḥaf /vi/ passive of *laḥḥaf*. - iva *mitlaḥḥaf*.

ل ح ق ¹

لحق liḥiq or laḥaq *(a)* /vt/ **1** to reach, catch up with (with implication of speed). *ʔilḥaq-na ɛas-suuq* catch us up at the market. *ma-lḥiqnaa-ʃ il-qaṭr* we didn't make the train. *ʔil-waksa ʔilli laḥaqit-u* the misfortune which overtook him. *ʔig-gadaɛ huwwa lli yilḥaq maṭraḥ fil-ʔutubiis* the champ is the one who manages to get a seat on the bus. **2** to come to the rescue of, hurry to the aid of. *ʔilḥaquu-ni bid-duktuur* bring me the doctor quickly! *ʔil-mumassiliin bi-ybuṣṣu lil-mulaqqin ɛafaan yilḥaq-hum* the actors look to the prompter to help them out. **3** /preverb/ **3a** to have time to. *ma-lḥiqt'-ʃ ʔaḥaḍḍan yimiin* I didn't have time to pull over to the right. **3b** to hurry (to do s.th.) before it's too late. *yalla ɛafaan tilḥaq tiruuḥ is-suuq wi-tgiib il-quuṭa l-ḥilwa di* hurry off to the market and get those nice tomatoes (before they're all gone). *ʔilḥaq tuub* hurry and mend your ways (before it's too late for you). ‖*malḥuuqa (barḍak)* it's not too late (for you to do something about the matter). **3c** to begin or manage (to do s.th.) earlier than expected. *ya mṣibt-ı liḥqu yṣaddu* damn! they're already rusting! *huwwa lıḥıq yiftaaq li-bn-u* has he started to miss his son so soon? - vn *laḥaqaan*; ava *laaḥiq*; pva *malḥuuq*.

اتلحق ʔitlaḥaq /vi/ passive of *laḥaq*. - iva *mitliḥiq*.

لحّق laḥḥaq /vt/ to cause (s.o.) to catch up with or be in time for. *laḥḥaqt-u ṭ-ṭayyaara* I helped him make the plane. - vn *talḥiiq*; ava/pva *milaḥḥaq*.

ملحّق milaḥḥaq /adj */ capable of keeping up with things. *miʃ milaḥḥaq ɛala ɛyaal-u* he can't make ends meet family-wise.

لاحق laaḥiq /vt and vi/ to keep up (with). *miʃ milaaḥiq ɛaf-fuvl* he can't keep up with the work. *w-ana b-amallii-k laḥiq-ni fil-kitaaba* keep up with me in writing when I dictate to you. *ʔana miʃ milaḥiq-hum fil-ʔakl* I can't eat as fast as they do. ‖*ma-tlaḥiq-nii-ʃ fil-kalaam* don't keep anticipating what I'm going to say! - vn *milaḥqa*; ava *milaatiq*.

¶ *laaḥiq ɛala* to keep (s.o.) supplied. *miʃ milaaḥiq ɛaleehum filuus* I can't keep up with their demands for money.

ألحق ʔalḥaq /vt/ to cause to join, enrol, register. *leeh*

ma-tilḥiq-ʃ ibn-ak bi-maɛhad ṣinaaɛi why don't you enrol your son in a technical institute? - vn *ʔilḥaaq*; ava *milḥiq*; pva *mulḥaq*.

ملحق *mulḥaq* /n pl *malaaḥiq*/ **1** supplementary examination. *ʔil-waad saqaṭ fil-ɛarabi w-ɛandu mulḥaq* the boy failed in Arabic and has to do a supplementary examination. **2** annex (of a building). *kull istudyu lii mulḥaq* each studio has an annex. **3** appendix (to a book). **4** employer's copy of a payroll paid by a bank on his behalf. — /pl *-iin*/ **5** attaché. *xaff' wizaarit il-xaarigiyya ka-mulḥaq* he entered the Ministry of Foreign Affairs as an attaché. — /adj */ **6** attached, annexed. *kull' maktab ɛiqaari mulḥaq bii maktab handasi* each real-estate office has an engineering office attached to it.

التحق *ʔiltaḥaq↑* /vi/ **1** to enrol, register oneself. *ʔiltaḥaqt' bil-maɛhad* I enrolled in the institute. **2** to take up work (in an occupation or institution). *ḥa-yiltiḥiq bi-waẓiifa gdiida* he will take up a new post. - vn *ʔiltiḥaaq*; ava *miltiḥiq*.

[2] ل ح ق see ل ح و ق: *luḥuuqi*

ل ح ل ح

لحلح *laḥlaḥ* /vt/ to stir to activity, set moving. *da kaslaan xaaliṣ - m-aɛraf-ʃ alaḥlaḥ-u ʔizzaay* he's very lazy - I don't know how to get him moving. *huwwa l-baqʃiif illi ylaḥlaḥ-u* it's the tip that makes him move. *miʃ qaadir ʔalaḥlaḥ il-ɛarabiyya min maṭraḥ-ha* I can't budge the car from its place. - vn *laḥlaḥa*; ava/pva *milaḥlaḥ*.

لحلحه *laḥlaḥa* /n/ resourcefulness. *ʔir-rizq' yḥibb il-laḥlaḥa [prov]* ≈ fortune shines upon those who bestir themselves.

ملحلح *milaḥlaḥ* /adj */ lively and resourceful. *ʔilli b-yingaḥ huwwa ʃ-ʃabb il-milaḥlaḥ* the one who succeeds is the enterprising young man.

لحلاح *liḥlaaḥ* /coll n/ *[bot]* **1** thistle(s). **2** meadow saffron.

لحلوح *laḥluuḥ* /n pl *laḥaliiḥ*/ *[slang]* an Egyptian pound (especially in contexts of bribing).

لحلوحه *laḥluuḥa: ʔik-kalba l-laḥluuḥa [coarse]* a pair of mating dogs.

اتلحلح *ʔitlaḥlaḥ* /vi/ **1** to be stirred into activity. **2** to get going, get moving. *ʔitlaḥlaḥ laḥsan maɛaad il-ɤada ḥa-yfuut* get a move on or you'll miss the lunch appointment. - ava/iva *mitlaḥlaḥ*.

[1] ل ح م

لحم *laḥam (i)* /vt/ **1** to join (by welding, soldering, splicing etc.). **2** to patch, mend. *ʔil-ɛagala ɛawza lḥaam* the tyre needs patching. — /vi/ **3** to heal (of a wound). *li-ḥadd' ma l-garḥ' yilḥim* until the wound heals. - vn *liḥaam, laḥm, laḥamaan*; ava *laaḥim*; pva *malḥuum*.

لحام *liḥaam* **1** /vn/ ‖*firiiṭ liḥaam* soldering flux. *liḥaam bunṭa* spot welding. **2** /n pl *-aat*/ join, joint. *ʔil-liḥamaat illi b-tibqa been il-balaaṭa wit-tanya* the joins between one tile and another. **3** *[text]* weft.

لحمة *laḥma'* /inst n, pl *-aat*/ a weld.

لحمه *liḥma* /n pl *-aat*/ *[text]* weft. *ɛamalna fin-nasiig sida quṭn' w-liḥmit ḥariir* we made a warp of cotton and a weft of silk in the fabric.

لحّام *laḥḥaam* /n */ one who solders, welder.

ملحمه *malḥama* /n pl *malaaḥim*/ epic. *malḥamit il-ʔilyaaza* the Iliad.

اتلحم *ʔitlaḥam* /vi/ **1** to be joined (by welding, soldering etc.). **2** to be patched, be mended. - iva *mitliḥim*.

لحّم *laḥḥam'* = *laḥam* 1 and 2. - vn *talḥiim*; ava/pva *milaḥḥam*.

اتلحّم *ʔitlaḥḥam'* = *ʔitlaḥam*. - iva *mitlaḥḥam*.

اتلاحم *ʔitlaaḥim↑* /vi/ to close with one another. *ʔitlaḥmu bis-silaaḥ il-ʔabyaḍ* they fell upon each other with knives and bayonets. - ava *mitlaaḥim*.

التحم *ʔiltaḥam↑* /vi/ **1** to heal over (of a wound). **2** = *ʔitlaaḥim*. - vn *ʔiltiḥaam*; ava *miltiḥim, multaḥim*.

ملتحمه *multaḥama* /n/ *[anat]* conjunctiva. *ʔiltihaab il-multaḥama* conjunctivitis.

[2] ل ح م

لحم *laḥm* /n/ **1** flesh. *dool min laḥm-i-na w-damm-i-na* they're our own flesh and blood. *huwwa ga b-laḥm-u w-damm-u* he came in person. *laḥm' ktaaf-ak min xeer-i* (the flesh of your shoulders is from my goodness) you owe everything to me. ‖*ɛala l-laḥm* with nothing on underneath, as in *laabis baʃkiir ɛala l-laḥm* wearing a towel with nothing on underneath. - *ɛala laḥm' baṭn-u* on an empty stomach. - *kal laḥm' ʔabuu* he spoke ill of his father. - *raagil ɤalbaan fi-raqabt-u koom laḥm* a poor man with a lot of (helpless) children. - *dafaɛ min il-laḥm il-ḥayy* he paid what he could ill afford. **2** /pl *luḥuum*/ meat. *laḥm' xanziir* pork. *ɛuguul il-laḥm* calves for meat. ‖*ʔaxd' laḥm" ɛala ɛaḍm* taking the good with the bad. - *kal-ha laḥm' w-ramaa-ha ɛaḍm* he used her when she had something to offer and threw her out when she was finished.

لحمه *laḥma*[2] /n/ meat. *laḥma b-xuḍaar* meat and vegetable stew. ‖*ɛiid il-laḥma [slang Isl]* the Greater Feast (cf *ɛiid il-ʔaḍḥa*). - *ma-ʃaf-ʃ' laḥma [slang]* he's a virgin, he's never had a woman.

لحماية *laḥmaaya* /n pl *-aat*/ fleshy growth in or on the body.

لحميّة *laḥmiyya* /n pl *-aat*/ **1a** piece of extraneous flesh, fleshy growth. **1b** adenoids. **2** inner fleshy surface (of the skin). *laḥmiyyit il-ʕeen [anat]* conjunctiva. ‖*laḥmiyyit il-fuxxaar* the unglazed surface of the earthenware.

ملحم *milḥim* /adj * and invar/ fleshy, fat. *mara milḥima* (or *milḥim*) a plump woman.

لحّم *laḥḥam*[2] **1** /vt/ to dress (a hide, by removal of flesh etc.). **2** /vi/ to become fleshy, become fat. - vn *talḥiim*; ava *milaḥḥam*.

اتلحّم *ʔitlaḥḥam*[2] /vi/ to be dressed (of a hide, by the removal of flesh, etc.). - iva *mitlaḥḥam*.

ل ح ن

لحن *laḥan (a)* /vi/ to make an error (in grammar, Koranic recitation etc.). - vn *laḥn*; ava *laaḥin*.

لحنة *laḥna* /inst n, pl *-aat*/ error, slip (in grammar, Koranic recitation etc.).

لحن *laḥn* /n pl *ʔalḥaan*/ melody or musical composition (especially vocal music).

لحّن *laḥḥan* /vt/ to set (words) to music. *laḥḥant-a-ha laḥn' samaaʕi* I composed the music for it by ear. - vn *talḥiin*; ava/pva *milaḥḥan*.

ملحّن *mulaḥḥin* /n */ composer of music (especially for songs).

اتلحّن *ʔitlaḥḥan* /vi/ to be set to music. - iva *mitlaḥḥan*.

ل ح و ق

لحوقى *luḥuuqi* /n/ type of shallow cooking pan.

ل ح ى

لحية *liḥya*ˀ /n pl *liḥa*/ beard.

ل خ ب ط

لخبط *laxbaṭ* **1** /vt/ to muddle, confuse, make a mess of. *ḥikaaya tlaxbaṭ il-ʕaql* a matter that confuses the mind. ‖*ḥ-alaxbaṭ kayaan-u* I'll give him what for! - *ḥ-alaxbaṭ wiff-u* I'll give him a bloody nose! - *maa-lik milaxbaṭa wiff-ik kida* why have you slapped all that filthy make-up on your face? - *ʔaxallii-k timʃi ʕal-ʕagiin ma-tlaxbaṭ-uu-ʃ* ≈ I'll teach you manners! **2** /vi/ to act or speak improperly. *ḥa-ylaxbaṭ maʕaana fil-filuus* he'll try and cheat us. *laxbaṭu maʕaana fik-kalaam* they used bad language with us. - vn *laxbaṭa*; ava/pva *milaxbaṭ*.

لخبطة *laxbaṭa* /n pl *laxabiiṭ*/ muddle, confusion, mix-up. *ḥaṣalit laxbaṭa fit-tazaakir* there was a mix-up over the tickets.

اتلخبط *ʔitlaxbaṭ* /vi/ to be or become muddled up, become confused, become messed up. *laʕeet il-ḥikaaya tlaxbaṭit* I found that things had become muddled. - ava/iva *mitlaxbaṭ*.

ل خ خ

لخ *laxx (u)* /vi/ to tell a tall story. - vn *laxx, laxaxaan*; ava *laaxix*.

لخّاخ *laxxaax* /n * and pl *laxxaaxa*/ teller of tall stories.

ل خ ص

لخّص *laxxaṣ* /vt/ to summarize. - vn *talxiiṣ*; ava/pva *milaxxaṣ*.

ملخّص *mulaxxaṣ* /n pl *-aat*/ summary.

اتلخّص *ʔitlaxxaṣ* /vi/ to be summarized. - iva *mitlaxxaṣ*.

ل خ ف ن

لخفن *laxfin* /vt/ to muddle, confuse, perplex. - vn *laxfana*; ava/pva *milaxfin*.

اتلخفن *ʔitlaxfin* /vi/ to be muddled, confused or perplexed. - iva *mitlaxfin*.

ل خ ل خ [1]

لخلخ *laxlax* **1** /vt/ to loosen, allow play. **2** /vi/ to become loose, have play. *rukab-i laxlaxit min il-maʃy* my knees become rubbery from walking. - vn *laxlaxa*; ava/pva *milaxlax*.

اتلخلخ *ʔitlaxlax* = *laxlax* 2. - ava *mitlaxlax*.

ل خ ل خ [2] see م ل خ ل خ : *muluxlux*

ل خ م

لخم *laxam (i)* /vt/ to overtax, fluster and confuse with excessive demands. *goz-ha laxim-ha fil-wilaad* her husband has given her so many children she's at her wit's end. *ʔana malxuuma ʕaʃaan ma-kunt'-ʃ ʕamla ḥsaab-i ʔasaafir dilwaqti* I'm all in a muddle because I had not reckoned to be leaving now. - vn *laxma, laxamaan*; ava *laaxim*; pva *malxuum*.

لخمة *laxma* /n/ **1** confusion, embarrassment. ‖*lamma b-aqaf quddaam il-mudiir b-aqrab laxma* when I stand before the director, I get confused. **2** /invar/ slow-witted person.

اتلخم *ʔitlaxam* /vi/ to be overtaxed, become flustered or confused. - ava/iva *mitlixim*.

استلخم *ʔistalxam* /vt/ to consider slow-witted. *ʔistalxamu l-muwaẓẓaf ig-gidiid wi-ḥaṭṭu ʕala dmaaɣ-u f-fuɣl' kull-u* seeing that the new employee was a bit dim they piled all the work onto him. - vn *ʔistilxaam*; ava/pva *mistalxam*.

ل د د see ل ز ز [2]: *ladd, ladiid*

ل د ع
لدع، لذع *ladaɛ* (also *ladaʏ*) *(a)* /vt/ **1** to sting, bite (of a snake or scorpion), affect (s.o.) sharply with (s.th.). *ʕit-tiɛbaan ladaɛ-u mawwit-u* the snake bit him and killed him. *ladaɛ-ni ɢalam* he gave me a stinging slap. *ḫ-aldaɛ-ha gawaab yixallii-ha tgii-li ɛala mala wiff-a-ha* I'll send her a letter that will make her jump and come running to me. *ladaɛnaa-hum ʃakwa* we put in a strong complaint against them. **2** to steal, swipe. *raaḥ laadiɛ il-filuus* he went and swiped the money. ‖*ladaɛ il-ʕakla* he polished off the food. **3** *[metal]* to fuse. *ʕif-faraara ladaɛit il-ʕablatiin* the sparks fused the contact breaker. – /vi/ **4** *[metal]* to become fused. - vn *ladɛ, ladaɛaan*; ava *laadiɛ*; pva *malduuɛ*.
لدعة، لذعة *ladɛa* /n pl *-aat*/ **1** (also *ladʏa*[1]) /inst n/ a sting. **2** *[metal]* spot-solder, spot-weld.
لاذع *laaziɛ*↑ /adj/ biting, harsh and hurtful. *naqd*[i] *laaziɛ* biting criticism.
ملدوع، ملذوع *malduuɛ* /n pl *maladiiɛ*/ *[coarse]* son of a bitch. *ʕil-ḫitta di kull-a-ha naas maladiiɛ* this whole place is (filled with) rotten bastards. ‖*ɫallaɛ maladiiɛ (-i) [coarse]* he gave (me) hell.
ملدوعة، ملذوعة *malduuɛa* /n pl *maladiiɛ*/ *[coarse]* loose woman, whore, tart. *ʕibn*[i] *malduuɛa* ≈ son of a bitch.
اتلدع *ʕitladaɛ* (also *ʕitladaʏ*) /vi/ passive of *ladaɛ*. - iva *mitlidiɛ*.

ل د غ [1]
يلدغ *yulduʏ (fik-kalaam)* /imperf v/ to speak with defective pronunciation (especially rhotacism). - vn *ladaʏaan*.
لدغة *ladʏa*[2] /n pl *-aat*/ instance of defective pronunciation (especially rhotacism).
ألدغ *ʕaldaʏ* /adj, fem *ladʏa*, pl *ludʏ*/ having defective pronunciation (especially rhotacism).

ل د غ [2] see ل د ع: *ladaʏ, ladʏa*[1], *ʕitladaʏ*

ل د ن [1]
لدّن *laddin* /vt/ *[rur]* to dry out (bread) by baking it a second time. *ɛeef miladdin* twice-baked bread. ‖*sitt*[i] *mladdina* a skinny or bony woman. - vn *taldiin*; ava/pva *miladdin*.
اتلدّن *ʕitladdin* /vi/ passive of *laddin*. - iva *mitladdin*.

ل د ن [2]
لداين *ladaayin*↑ /pl n/ plastics.

ل ذ ذ see ل ز ز [2]

ل ذ ع see ل د ع

ل ر ج
لارج *larj* <Fr *large*> /adj invar/ generous.

ل ر ن ج
لارنج *laring* <P *nârang*> /coll n/ Seville oranges. - also *naring*.

ل ز ا ل ك see ز ا: *li-zaalik*

ل ز ج
لزج *lazig, lizig* /adj/ **1** viscous. **2** boorish.
لزوجة *luzuuga* /n/ viscosity.

ل ز ز [1]
لزّ *lazz*[1] *(i)* /vt/ to push, shove. *lazz iṭ-ṭarabeeza ɛal-ḫeeṭa* he pushed the table against the wall. ‖*lazzuu ɛalɢa ṭayyiba* they gave him a good thrashing. - vn *lazz, lazazaan*; ava *laaziz*; pva *malzuuz*.
اتلزّ *ʕitlazz*[1] /vi/ to be pushed, be shoved. ‖*ʕitlazz*[a] *ɛalɢa suxna mbaariḫ* he got a thorough beating yesterday. - iva *mitlazz*.

ل ز ز [2]
لذّ *lazz*[2] *(i)* /vt/ to please, delight. *yilizz-u ʕinnu yiḍrab* he gets pleasure out of beating. *di ḫaaga bi-tlizz-u ʕinnu yiɛmil-ha* this is something which he is delighted to do. ‖*mimma lazza wa-ṭaab*↑ ≈ the choicest of food. - vn *lazazaan*; ava *laaziz*; pva *malzuuz*.
لذّ *ladd (i)* /vi/ to appeal, meet with approval. *ʃakl-a-ha ladd*[a] *ɛalayya* her appearance appealed to me. *ʕinʃa-lla l-ʕakl*[i] *ylidd*[a] *ɛaleek* I hope you find the food to your taste. - vn *ladd, ladadaan*; ava *laadid*.
لذّة *lazza* /n pl *-aat*/ pleasure. *lazza roḥiyya* a spiritual joy.
لذيذ *laziiz* /adj pl *luzaaz, luzaza*/ nice, pleasant. *ʕakl*[i] *laziiz* tasty food. *bint*[i] *laziiza* a sweet girl.
لديد *ladiid*↓: *ladiid ya tirmis [vendor's cry]* delicious lupin seeds!
ألذّ *ʕalazz* /el/ more/most nice or pleasant.
ملذّات *malazzaat* /pl n/ sensual pleasures.
اتلذّ *ʕitlazz*[2] /vi/ to obtain sensual pleasure. *fii naas ma-titlazz*[i]*-ʃ mil-ʕakl il-masluuq* there are people who don't enjoy boiled food. - ava *mitlazz*.
اتلذّذ *ʕitlazziz* /vi/ to experience enjoyment, feel pleasure. *ʕitlazzizt*[i] *min il-musiiqa* I enjoyed the music. - ava *mitlazziz*.

التذّ *ʔiltazz* = *ʔitlazz*. - ava *miltizz*.

استلذّ *ʔistilazz, ʔistalazz* **1** /vt/ to find enjoyable, find pleasurable. *ʔistilazz il-ʔakl' ʕaam faṭṭab ʕalee* he found the food delicious so he polished it off. **2** /vi/ to find enjoyment, find pleasure. *ʔistalazz' lid-dafa ʕaam naam* finding comfort in the warmth, he went to sleep. - vn *ʔistilzaaz*; ava *mistilazz, mistalazz*.

ل ز ع see ل د ع : *laaziʕ*

ل ز ق

لزق *lizıʕ (a)* /vi/ to adhere, stick. *ʔil-ʔaʕʃaab il-baḥrıyya ʔilli b-tılzaʕ ʕal-markıb* the seaweed which adheres to the ship. - vn *lazaʕaan, lızıʕ*; ava *laazıʕ*.

لزق *lazaʕ (a)* /vt/ **1** to stick, affix (with adhesive matter). *bı-yilzaʕ il-xaʃab fi-baʕḍ-u bil-ɣıra* he glues the wood together. **2** to slap. *lazaʕ-nı ʕala sdaaɣ-i* he slapped me on my cheeks. - vn *lazʕ*; ava *laaziʕ*; pva *malzuuʕ*.

لزيق *liziiʕ* /n/ adhesive matter.

لزق *lazʕ* /vn/ ‖*xabṭ' lazʕ* abruptly and bluntly, as in *raaḥ xabṭ' lazʕ" ḥaka l-ḥikaaya* he plunged right into the story, he blurted out the story.

لزقه *lazʕa* /n pl *-aat, luzaʕ*/ **1** sticking plaster, adhesive tape. ‖*huwwa lazʕa b-ɣıra* ≈ is one never to be rid of him? **2** poultice.

لزّاق *lazzaaʕ* **1** /adj/ sticky, adhesive. *waraʕ lazzaaʕ* masking tape, sticky tape. **2** /n/ glue.

ملزقه *malzaʕa* /n pl *malaazıʕ*/ clamp.

اتلزق *ʔitlazaʕ* /vi/ **1** to be stuck, be affixed (with adhesive substance). **2** to adhere, attach oneself. *ʔitlizıʕ gamb il-baab* stick close to the door! - ava/iva *mitlıziʕ*.

لزّق *lazzaʕ* **1** /vt/ to affix, stick. ‖*lazzaʕ it-tuhma f-ṣaḥb-u* he pinned the rap on his friend. **2** to make (dung) into cakes. *ḥatta g-gilla ylazzaʕuu-ha wı-ywallaʕu biiha* even cattle dung they mix with straw and shape into cakes to use for fuel. — /vi/ **3** to stick, be sticky. *laʕeet il-mixadda ʕaleeha buʕʕa ṣafra bi-tlazzaʕ* I found that the pillow had a sticky yellow mark on it. - vn *talzıʕ*; ava/pva *milazzaʕ*.

اتلزّق *ʔitlazzaʕ* /vi/ **1** to be affixed, be stuck. **2** be made into cakes (of dung). - iva *mitlazzaʕ*.

ل ز م

لزم *lizim (a)* **1** /vt and vi/ to be necessary (for). *yılzam-ak ḥaaga* or *yilzam-lak ḥaaga* or *lazm-ak ḥaaga* or *lazim-lak ḥaaga* do you need anything? *lizim-ak ḥaaga* etc. did you need anything? *kaan yılzam-ak ḥaaga* were you in need of anything? *yilzam-ak badla* you need a suit. *tilzam-ak il-badla dı* do you need this suit? *ʔil-ḥagaat illi ma-tılzam-naa-ʃ* the things we don't need. ‖*yılzam xıdma* can I be of service? - *ʔilli ma-maʕuu-ʃ ma-yılzam-uu-ʃ [prov]* he who has nothing cannot (afford to) need anything. **2** /vt/ to keep to. *ʔılzam ḥadd-ak* (or *ḥuduud-ak*) (keep to your limits!) mind your own business! *ʔılzam ʔadab-ak* mind your manners! - vn *lizuum, luzuum*; ava *laazim*; pva *malzuum*.

لزم *lazam' (ı)* /vt/ to hold responsible. *ʔinta ʕamalt-a-ha tibʕa malzuum biiha* you're the one who did it so you're responsible. - vn *lizuum, luzuum*; ava *laazim*; pva *malzuum*.

لزوم *lizuum, luzuum* /n/ **1** need. *ma-fı-ʃ lızuum tıkallif nafs-ak* there's no need for you to trouble yourself. *ʕand il-luzuum* at need, when necessary. **2** use, function. *ʔil-bafra lızum-ha l-laff ıs-sagaayir* cigarette paper is used for rolling cigarettes.

لازم *laazim' 1* /ava/ ‖ *ʔil-laazim* what is necessary, as in *takluf ʔaktar mın il-laazim* more trouble than necessary, *qul-lı l-laazım wı-bass* just tell me what is necessary, *ʔit-tamargıyya ʕamalit laha l-laazim* the nurse gave her the required treatment, *ʔiddii-lu l-laazim bıtaaʕ-u b-ḥees ʔınnu ma-yıʃtıkı-ʃ* give him what he needs so he won't complain. **2** /invar/ **2a** modal of necessity. *laazım tıkfıf ʕand' duktoor kıwayyıs* you must be examined by a good doctor. *mıʃ laazım yıgı* (1) he must not come. (2) he need not come. (3) he should not come. *kaan laazım titʕaffa maʕaana* you (really) should have had supper with us. **2b** modal of probability. *laazım rawwaḥit* she must have gone home. *ʔilli xad ır-radyu laazim yikuun ʔaxuu-k* it must be your brother who took the radio.

لازمه *lazma* /n/ **1** need. *lamma ykuun fi lazma lil-ʕarabıyya* when there is a need for the car. *ma-lhaa-ʃ lazma* it is unnecessary. **2** use, function. *lazmit ıs-sanduuʕ ʔınnu yʕallım il-ḥarakaat* the function of the vaulting box is to teach exercises. — /pl *-aat*/ **3** *[mus]* instrumental interlude in a song — /pl *lawaazim*/ **4** mannerism. *kitiir min il-mudarrısın liihum lawaazim tıdaḥḥak* many teachers have funny mannerisms.

لوازم *lawaazım* /pl n/ equipment, requisites. *lawaazim il-xayyaṭiin* tailors' requisites.

لزم *lazam²* /adv/ in the closest propinquity. *bet-hum gambına lazam* their house is right beside us. *ʔaxuuya lazam* my german brother.

ألزم *ʔalzam'* /el/ more/most necessary.

ملزمه *malzama* /n pl *malaazim, malzamaat*/ **1** *[print]* signature (of eight or sixteen sheets). **2** *[acad]* set of stencilled lecture notes.

اتلزم ʔitlazam /vi/ passive of *lazam*[1]. - iva *mitlizim*.
لزّم *lazzim* /vt/ to hold responsible. *lamma kasar il-ɛagala lazzimuu biiha* when he broke the bicycle they held him responsible for it. - vn *talziim*; ava/pva *milazzim*.
اتلزّم ʔitlazzim /vi/ to be held responsible. - iva *mitlazzim*.
لازم *laazim*[2] /vt/ **1** to stick to, adhere to. *ʔil-faqr*[i] *mlazim-hum* poverty clings to them. ‖*ya-lli l-gooza mlazmaa-k* you who are never without a *gooza*. - *sitt*[i] *mlazma l-firaaʃ* a bed-ridden woman. **2** to accompany (musically). - vn *milazma*; ava *milaazim*.
ملازم *mulaazim* /n */ **1** (also *mulaazim taani*) *[mil]* second-lieutenant. ‖*mulaazim ʔawwal* first-lieutenant. **2** *[nav]* sub-lieutenant. ‖*mulaazim taani* midshipman, acting sub-lieutenant.
ألزم ʔalzam[2] = *lazam*[1]. ‖*sinn*[i] *ʔilzaam* school age. - vn *ʔilzaam*; ava *milzim, mulzim*; pva *mulzam*.
إلزامى ʔilzaami /adj/ compulsory. *taɛliim ʔilzaami* compulsory schooling.
التزم ʔiltazam /vi/ **1** to undertake an obligation or responsibility. *kull*[i] *waaḥid minhum bi-yiltizim bi-ḥaaga muɛayyana* each one of them is responsible for a particular thing. **2** to adhere, be committed. *fii naas miltizmiin bil-lawaayiḥ* there are people who stick to the rules. **3** *[obsol]* to be the holder of a concession or franchise. - vn *ʔiltizaam*; ava *miltizim, multazim*[f].
التزام ʔiltizaam /n pl *-aat*/ **1** obligation, responsibility. **2** *[obsol]* concession, franchise.
ملتزم *multazim* /n */ **1** adherent. **2** *[obsol]* holder of a concession or franchise.
استلزم ʔistalzam[f] /vt/ to require, deem necessary. - vn *ʔistilzaam*; ava *mistalzim*; pva *mustalzam*.
مستلزمات *mustalzamaat* /pl n/ equipment, requisites.

ل س

لسة *lisa* or *lasa* /n pl *-aat*/ gum (of the teeth). *kayy il-lisa* cauterization of the gums. - also *laasa*.

ل س ت

لستة *lista* <It *lista*> /n pl *-aat, lisat*/ **1** list (of any kind). **2** bill of fare, menu.

ل س س ا

لسّه *lissa* /adv, w pron suff *lissaa-*/ **1** still, (not) yet. *huwwa lissa ṣuɣayyar* he's still young. *lissaa-ku ma-ruḥtuu-ʃ* haven't you gone yet? *lissa talaata saaɣ* still three piastres (to go, owing etc.). *saafir lissa ma-fii-ʃ gumɛa* it's not yet a week since he left. *lissa ḫ-awaddi l-kutub* I've still to deliver the books. *gah walla lissa* has he come yet or not? *ʃuft il-mudiir. - lissa* 'Have you seen the manager?' 'Not yet.' ‖*huwwa-nta lissa ʃuft*[a] *ḫaaga* you haven't seen anything yet! - *lissa badri* it's early yet, there's still plenty of time (said, e.g., to encourage departing guests to stay longer). - *lissa badri ɛala* it's still too soon for, as in *ʔil-baṭṭiix ṭiliɛ laakin it-tiin lissa badri ɛalee* water-melon is in season but it will be a while before the figs come in, *ʔiṭ-ṭifl*[i] *ṣɣayyar - lissa badri ɛala l-mašy* the baby is very young - it's too early for him to walk. - *ʔistaḥmilna ktiir - wi-lissa* we've put up with a lot, and there's more to come! **2** just, just now, only recently. *di lissa kaanit waqfa gambi min sanya* she was standing next to me just a second ago. *da-nti lissa diik in-nahaar kunti b-titkallimi ɛan il-gawaaz* why, only the other day you were talking about marriage! *ʔis-sitt illi kaanit lissa gayya min ɛand id-duktuur farhadit* the lady who had just come from the doctor's fainted.

ل س ع

لسع *lasaɛ (a)* /vt/ **1** to scorch. *ʔil-makwa s-suxna lasaɛit il-huduum* the hot iron scorched the clothes. **2** to sting. *lasaɛit-ni naḥla* a bee stung me. ‖*lasaɛ-u ɋalam* he gave him a stinging slap. **3** *[slang]* to steal. *lasaɛ minni ktaab* he pinched a book from me. — /vi/ **4** to become stinging or acrid (of taste). - vn *lasɛ*; ava *laasiɛ*; pva *malsuuɛ*.
لسعه *lasɛa* /inst n, pl *-aat*/ a scorch, a sting, etc.
ملسوع *malsuuɛ* /adj */ jumpy, easily startled.
اتلسع ʔitlasaɛ /vi/ **1** to be scorched. *xallii-ha titlisiɛ fuwayya b-naar il-ḫubb* let her be scorched a little by the fire of love. **2** to be stung. **3** *[slang]* to be stolen. - iva *mitlisiɛ*.

ل س ك

لسكا *laska* <It *lasco*> /n/ *[naut]* slack (of a rope). *ʔiɛmil laska* slacken the rope!
لسّك *lassik* /vi/ *[naut]* to slacken a rope. - vn *talsiik*; ava *milassik*.

ل س ل ك

لاسلكى *lasilki* /n/ wireless.

ل س ن

لسان *lisaan* /n pl *lisína*; *ʔilsina*/ **1** tongue (of an animal or human). *ʔism-u ɛala kull*[i] *lsaan* his name is on every tongue. *nuṣṣ*[i] *lsaan wi-snaan ɛiira* half a tongue and false teeth (said of one who does not speak well). *yikkallim ɛan lisaan-i* he speaks on my behalf. *ʔiqṭaɛ lisaan ɛadiww-ak bis-salaamu ɛaleekum [prov]* (cut the

tongue of your enemy with a greeting) disarm your enemy by means of courtesy. *lisaan-ak ḥuṣaan-ak ʕin ṣunt-u ṣaan-ak [prov]* your tongue is (like) your horse; if you take care of it, it will take care of you. ‖ expressions referring to 'pulled' and 'long' tongues indicate insolence, thus *lisaan-u ṭawiil* (his tongue is long), *huwwa magruur min lisaan-u* (he has been pulled by his tongue), *zayy illi d-daaya garraa min lisaan-u* (like one whose tongue was pulled by the midwife), *mitlaffaɛ bi-lsaan-u* (his tongue is so long that he can be wrapped in it). *-ɛaayiz sikirteer milyoon lisaan fi-buqq-u* he wants a secretary who can deal with a million things at once. *-waakil lisaan gidy* he has eaten a billy goat's tongue ≈ he talks too much. **2a** (roughly) tongue-shaped object. *lisaan gazma* shoe-tongue. *lisaan ẓarf* envelope flap. **2b** spit (of land). **2c** wedge. **2d** *[carp]* a tenon. — /pl also *ʕalsun*/ **3** (foreign) language, (foreign) tongue. *kulliyyit il-ʕalsun* (Ain Shams University) College for foreign languages. ‖ *ʕit-takallum bil-ʕalsun [Chr]* speaking with tongues.

لسّن *lassin* /vi/ **1** to hang out, loll (of the tongue, from tiredness). **2** to speak unkindly or slanderously. *bi-ylassin ɛalayya* he says bad things about me. — /vt/ **3** to wedge. -vn *talsiin*; ava/pva *milassin*.

اتلسّن *ʕitlassin* /vi/ (impersonal) passive of *lassin* 2. *ʕil-bint' di tlassin ɛaleeha ktiir* this girl has been the subject of a lot of slanderous gossip. -iva *mitlassin*.

ل س ن س

ليسانس *lisans, lasans* <Fr *licence*> /n pl *-aat*/ degree of Bachelor of Arts. *lisans' ḥuquuq* bachelor's degree in law.

ل س و ع

لسوع *laswaɛ* **1** /vt/ **1a** to scorch. *ʕin-naar laswaɛit ʕiid-i* the fire scorched my hand. **1b** to give a scorching or stinging pain to. *ʕik-kurbaag laswaɛ riglay-ya* the whip stung my legs. **2** /vi/ **2a** to be scorched. **2b** to burn or sting with pain. -vn *laswaɛa*; ava/pva *milaswaɛ*.

اتلسوع *ʕitlaswaɛ* /vi/ **1** = *laswaɛ* 2. **2** be scorched on top and undercooked inside (of a dish of food). -iva *mitlaswaɛ*.

ل س ي ه

لاسيه *laseeh* <Fr *lacet*> /n/ type of lace work employing braid.

ل س ي و ن

لوسيون *lusyoon* <Fr> /n pl *-aat*/ lotion.

ل ش ى

اتلاشى *ʕitlaafaʔ* **1** /vt/ to avoid. *ḥaawil titlaafa l-ɤalaṭ il-marra g-gayya* try to avoid making a mistake next time. **2** /vi/ to disappear. -vn *talaafi*; ava *mitlaafi*.

ل ص ص

لصّ *liṣṣ* /n pl *luṣuuṣ*/ thief, robber.

لصوصيّة *luṣuṣiyya* /n/ thievery.

ألصّ *ʔalaṣṣ* /el/ more/most thieving. *ma-fuft'-ʃ ʔalaṣṣ' minnu fif-firka* he's the biggest thief I know in the whole company.

اتلصّص *ʕitlaṣṣaṣ* /vi/ to snoop, spy. -vn *talaṣṣuṣʔ*; ava *mitlaṣṣaṣ*.

ل ص ق

لصق *laṣaq, laṣaqʔ (a)* /vt/ to glue, stick, affix. ‖ *ʕit-tarkiib bil-laṣq [hort]* approach grafting. -vn *laṣq, laṣq*; ava *laaṣiq, laaṣiq*; pva *malṣuuq, malṣuuq*.

لصق *laṣq, laṣqʔ* /n/ adhesion, adhesiveness. *ma-lhaa-ʃ ʔayy' ɋuwwit laṣq* it has no sticking power.

ملصقات *mulṣaqaat, mulṣaqaatʔ* /pl n/ notices, posters, advertisements.

اتلصق *ʕitlaṣaq* /vi/ to be glued, be stuck, be affixed. -iva *mitliṣiq*.

التصاق *ʕiltiṣaaq, ʕiltiṣaaqʔ: ʕiltiṣaaq ir-rukbiteen* knock-kneedness. *ʕiltiṣaaq fil-maṣariin* intestinal lesions.

ل ص م

لصّم *laṣṣam* /vt/ to do a temporary or slapdash fixing-up job on (s.th.). *laṣṣamit il-fustaan li-ɤaayit ma tgiib waaḥid gidiid* she fixed up the (old) dress to carry her through till she could get a new one. *laṣṣam il-baab li-ɤaayit ma yaaxud il-filuus wi-yimʃi* he has fixed the door so that it will just hang together until he gets his money and goes away. -vn *talṣiim*; ava/pva *milaṣṣam*.

تلصيمة *talṣiima* /inst n, pl *-aat*/ a temporary or slapdash fixing-up job.

اتلصّم *ʕitlaṣṣam* /vi/ **1** to be temporarily or sloppily fixed. **2** to find or seize on a pretext. *ʕitlaṣṣamit-lu ɛala kilma w-sabit-lu l-beet* she seized upon a word (he said) as an excuse for leaving him. -ava/iva *mitlaṣṣam*.

ل ض م

لضم *laḍam (u)* **1** /vt/ to thread. *laḍm il-ʕibra* threading the needle. *laḍamit sabaɛ ḥabbaat fil-ʃatla* she strung seven beads on the string. **2** /vi/ to connect firmly, join together closely. -vn *laḍm, laḍamaan*; ava *laaḍim*; pva *malḍuum*.

¶ *laḍam maɛa* to join with (in conversation etc.). *laḍam*

maɛaa fik-kalaam he got into conversation with him. *laḍamu maɛa baɛḍ^{i} fiſ-ſitiima* they started insulting one another.

اتلضم *ſitlaḍam* /vi/ to be threaded. - iva *mitliḍim*.

ل ض ى

اللضى *ſil-laḍa*: such expressions as *miſ laaqi l-laḍa, ma-ɛanduu-ſ il-laḍa* etc. he is penniless.

اتلضّى *ſitlaḍḍa* /vi/ to be tortured, suffer pangs (of love, hunger etc.). *ſitlaḍḍa mig-guuɛ* he was starved. - ava *mitlaḍḍi*.

ل ط خ

لطخ *laṭax (u, i)* /vt/ **1** to smear, soil. *laṭaxu l-ħeeṭa b-ṭiin* they smeared the wall with mud. *laṭax ɋamiiṣ-u b-damm* he got blood on his shirt. **2** to deal (a blow or the like) to. - vn *laṭx, laṭaxaan*; ava *laaṭix*; pva *malṭuux*.

لطخ *laṭx* /n pl *luṭuux, luṭúxa*/ obtuse and rude person, stupid and boorish person.

لطخيّة *laṭxiyya* /inst n, pl -*aat*/ a smearing. *laṭaxna l-ħeeṭa taani laṭxiyya w-bardu ſaqqaqit* we plastered over the wall a second time but it still developed cracks.

ألطخ *ſalṭax* /el/ more/most obtuse, stupid, clumsy etc.

اتلطخ *ſitlaṭax* /vi/ **1** to be smeared, be soiled. **2** to be dealt a blow or the like. - iva *mitliṭix*.

لطّخ *laṭṭax* /vt/ **1** to smear or soil thoroughly. **2** to deal many blows to. — /vi/ **3a** to talk insultingly. **3b** to talk nonsensically. - vn *talṭiix*; ava/pva *milaṭṭax*.

اتلطّخ *ſitlaṭṭax* /vi/ to be thoroughly smeared or soiled. - iva *mitlaṭṭax*.

استلطخ *ſistalṭax* /vt/ **1** to consider dimwitted. **2** to select for stupidity. *ſistalṭaxu r-raagil wi-diħku ɛalee w-xadu fluus-u* they picked on the man as a fool, tricked him and got his money. — /vi/ **3** to behave boorishly. *ſinta ħa-tistalṭax ɛala miin* what do you think we are for you to be rude to us? - vn *ſistilṭaax*; ava/pva *mistalṭax*.

ل ط ز ا ن

لاطزان، لطزان *laṭazaan* (also *xaſab laṭazaan*) /n/ whitewood planking. - also *latazaan*.

لاطزانة *laṭazaana* = *laṭazaan*. - also *latazaana, tazaana*.

ل ط ش

لطش *laṭaf (u)* /vt/ **1** to steal, filch. *ſil-ɛiyaal laṭafu l-maħfaẓa btaɛt-i* the kids swiped my wallet. ‖ *ſayfin-na miħtagin-hum yulṭufu zayy^{i} ma humma ɛayziin* they realize that we're dependent on them so they take us for all they can get. **2** to hit, strike. *ſil-ɛarabiyya laṭafit-u* the car struck him. *ſil-balṭagi laṭaf-ha ɋalameen* the thug knocked her about. *ſilṭuf il-ħeeṭa wiff^{i} buuya* slap a coat of paint on the wall. ‖ *damm-u yulṭuf* he's antipathetic. - *kubbaayit biira b-tulṭuf-u* he gets drunk on one glass of beer. **3** to scorch. *ſin-naar laṭafit huduum-u* the fire scorched his clothes. ‖ *ſiſ-fams^{i} laṭafit-u* he got sunstroke. — /vi/ **4** to be scorched. *ſil-xaſaba laṭafit* the piece of wood got scorched. - vn *laṭf*; ava *laaṭif*; pva *malṭuuf*.

لطش *laṭf* /n/ *[carp]* process of attaching something to a surface without using joints (i.e. by gluing, nailing etc.).

لطشة *laṭfa* /n pl -*aat*/ **1** instance noun of *laṭf*. *laṭfit fams* (bout of) sunstroke. **2** blot, smudge.

ملطوش *malṭuuf* **1** /adj * and pl *malaṭiif*/ touched in the head. **2** /n pl *malaṭiif*/ *[slang, deris]* an Egyptian pound.

لطّاش *laṭṭaaf* /n pl -*aat*/ *[text]* rubbing leather (of a loom).

لطّاشة *laṭṭaafa* /n pl -*aat*/ **1** leather bandage to prevent a horse's legs from knocking together. **2** = *laṭṭaaf*.

ملطشة *malṭaſa* /n/ butt (for jokes, scorn, anger etc.).

اتلطش *ſitlaṭaf* /vi/ **1** to be stolen, be filched. **2** to be hit, be struck. **3** to be brushed against. - iva *mitliṭif*.

لطّش *laṭṭaf* /vt/ **1** to slap, hit. *xud-u laṭṭaf-lu wiff-u* take him and give his face a slapping. **2** to blotch, blot, make blotchy. — /vi/ **3** to flail or blunder about as though in the dark, behave in a slapdash manner, make a mess of things. *maafi ylaṭṭaf fiḍ-ḍalma* going blundering about in the dark. *ſid-duktuur laṭṭaf fit-tafxiiṣ* the doctor botched the diagnosis. *ſid-dinya mlaṭṭaſa maɛaaya* life messes me around. **4** to blotch, blot. *ſiṣ-ṣabɣa laṭṭafit* the dye blotched. *mumkin il-ħibr^{i} ylaṭṭaf fil-waraɋ* the ink may make blotches on the paper. - vn *talṭiif*; ava/pva *milaṭṭaf*.

اتلطّش *ſitlaṭṭaf* /vi/ passive of *laṭṭaf*. - iva *mitlaṭṭaf*.

ل ط ط [1]

لطّ *laṭṭ (u)* /vt/ to touch (lightly). *ſil-ħagar id-daayir la budd^{i} min laṭṭ-u [prov]* ≈ a rolling stone is bound to get a bit of a knock. - vn *laṭṭ, laṭaṭaan*; ava *laaṭiṭ*; pva *malṭuuṭ*.

لطّة *laṭṭa* /inst n, pl -*aat*/ a slight touch.

اتلطّ *ſitlaṭṭ* /vi/ to be touched. ‖ *ſinta tlaṭṭeet fi-raas-ak* have you gone crazy? - iva *mitlaṭṭ*.

ل ط ط [2]

لطّ *luṭṭ* <Engl> /n pl -*aat*/ lot (in an auction).

ل ط ع

لطع *laṭaɛ (a)* /vt/ **1** to stick (s.th. or s.o. onto s.th.). *ſiddeet-u ſalluut laṭaɛ-u fil-ħeeṭa* I gave him a kick that had him flat against the wall. ‖ *ſilṭaɛ il-kariima* kiss the

hand. **2** to leave (s.o.) stranded. - vn *laṭaɛaan, laṭɛ, laṭɛa*; ava *laaṭiɛ*; pva *malṭuuɛ*.

لطعة *laṭɛa*[1] /pl *-aat*/ instance noun of *laṭɛ*.

لطعه *luṭɛa, laṭɛa*[2] /n pl *luṭaɛ*/ patch or cluster (of insect eggs, on leaves, plants etc.).

اتلطع *ʔitlaṭaɛ* /vi/ to be kept waiting. - iva *mitliṭiɛ*.

اتلطّع *ʔitlaṭṭaɛ* /vi/ to delay, hang about. *ʔitlaṭṭaɛ gamb il-ḥeeṭa* he hung about by the wall. *kull' ma ʔabɛat-ha f-fuyla timʃi titlaṭṭaɛ* whenever I send her on an errand she dawdles along. - ava *mitlaṭṭaɛ*.

ل ط ف

لطف *laṭaf (u)* /vi/ to show mercy (of God). *ʔulṭuf bi-ɛabiid-ak ya rabb* have mercy on Thy servants, Lord (prayer used in time of hardship). *ʔalla yulṭuf-bu* may God be kind to him (implying mental deficiency). - vn *luṭf*; ava *laaṭif*; pva *malṭuuf*.

لطف *luṭf* **1** /n pl *ʔalṭaaf*/ mercy, kindness. *luṭf-ak ya rabb* (I seek) Thy mercy, Lord. *ya xafiyy il-ʔalṭaaf naggi-na mimma nxaaf* O possessor of unknown mercies, save us from what we fear! || *ʔil-luṭf*[a] *ɛand il-qaḍa* (may God show) mercy in the administration of fate. — /no pl/ **2** gentility. *raagil kull-u luṭf* he's gentility itself. *da bass' min luṭf-ak* ≈ you are too kind (in reply to a compliment). **3** silliness, softness in the head. *ɛandu luṭf* and *ḥaṣal-lu luṭf* he's touched.

لطافه *laṭaafa* /n/ charm, pleasantness. || *bi-ṣanɛii laṭaafa* with persuasive charm.

لطيف *laṭiif* **1** /adj pl *luṭaaf*/ pleasant, charming. *ʔil-bint' di fakl-a-ha laṭiif* this girl has a pleasant appearance. *nukat laṭiifa* amusing jokes. *ʔig-gins il-laṭiif* the fair sex. **2** /n/ Merciful One (epithet of God). *ya laṭiif* (1) God forbid! (2) God protect us!

ألطف *ʔalṭaf* /el/ more/most pleasant, agreeable, nice or charming.

لطّف *laṭṭaf* **1** /vt/ to make pleasant or refreshing. *ruff' mayya barra tlaṭṭaf ig-gaww* sprinkle water outside the door to cool the air. *ʔiʃrab ḥaaga saqɛa tlaṭṭaf qalb-ak* have a cold drink to refresh you. **2** /vi/ to become pleasant. *ʔig-gaww' laṭṭaf* the weather grew pleasant. - vn *talṭiif*; ava/pva *milaṭṭaf*.

لاطف *laaṭif* /vt/ to humour, indulge, be nice to. - vn *mulaṭfa, mulaṭfa*; ava *mulaaṭif*.

ملاطف *mulaaṭif* /adj ^/ companionable

استلطف *ʔistalṭaf* /vt/ **1** to consider agreeable or pleasant **2** to select for pleasantness. — /vi/ **3** to behave in a pleasant manner. - vn *ʔistilṭaaf*; ava *mistalṭaf*.

ل ط م

لطم *laṭam (u)* **1**[↑] /vt/ to slap. **2** /vi/ to slap one's face (in grief or lamentation). || *ɛaayiz ganaaza yiʃbaɛ fiiha laṭm* he wants (to find) a funeral where he can slap his face to his heart's content (of one who looks for other people's troubles to enjoy). - vn *laṭm*; ava *laaṭim*; pva *malṭuum*.

لطمه *laṭma* /inst n, pl *-aat*/ a slap.

ملطمه *malṭama* /n invar/ butt (for anger, scorn etc.).

لطّم *laṭṭam* /vt/ to knock repeatedly one way and another. *ʔiz-zaman ẓalam-ni w-laṭṭam-ni* life has been unfair to me and given me some hard knocks. || *raagil milaṭṭam* a hard-bitten person, hard nut to crack. - vn *talṭiim*; ava/pva *milaṭṭam*.

اتلطّم *ʔitlaṭṭam* /vi/ **1** to be knocked about, be pushed around. *baqeet ʔatlaṭṭam fi-ḥayaat-i* life began to be hard for me. *ʔitlaṭṭamt' min maktab li-maktab* I was pushed around from office to office **2** to be hardened by experience. *ʔil-waẓiifa di tiḥtaag waaḥid mitlaṭṭam fiwayya* this job requires someone seasoned by a bit of experience. - iva *mitlaṭṭam*.

ل ظ ل ظ

لظلظ *lazlaẓ* /vi/ to become plump. - vn *laẓlaẓa*; ava *milazlaẓ*.

لظلوظ *laẓluuẓ* /adj * and pl *lazaliiz*/ plump.

لظ ى see ل ض ى

ل ع ب

لعب *liɛib (a)* /vt/ **1a** to play (a game or sport). *bi-yilɛabu koora* they play football. *b-alɛab gumbaaz* I do gymnastics. *bi-nilɛab il-qumaar* we gamble. || *liɛib it-talat waraqaat ɛaleehum* he cheated them. **1b** to make a play with. *liɛib ik-koora li-mḥammad* he passed the ball to Muhammad. *liɛibt iz-zahr* I threw the dice. *liɛib is-sabɛa* he played the seven. **1c** to play (a musical instrument). *bi-yilɛab gitaar* he plays the guitar. **2** to act (a role or part). *liɛibt' door il-baṭal* I took the part of the hero. — /vi/ **3** to play. *ʔil-ɛiyaal bi-yilɛabu fig-gineena* the children are playing in the garden. *xud baal-ak mil-faras - bi-yilɛab kitir* watch out for the horse - it's very frisky. || *liɛibt' fil-burṣa* I gambled on the stock exchange. - *bi-yilɛab bi-deel-u* (1) he's not straight, he messes around. (2) he sleeps around, he's not faithful. **4** to play around, tinker, mess around. *ʔil-ɛiyaal liɛbu fir-radyu kassaruu* the children tinkered around with the radio and broke it. *bi-yilɛab fi-manaxiir-u* he picks his nose. **5a** to be loose (of parts). *ʔil-ʔaks' b-yilɛab* the axle has some play. **5b** to wag, wiggle. *fuuf ik-kalb in-nuunu deel-u b-yilɛab ʔizzaay* see how the darling little dog's tail wags! **5c** to become choppy or rough (of the sea). **5d** to heave, pitch (of a

ship). - vn *liɛb*; ava *laaɛib*; pva *malɛuub*.
¶ *liɛib ɛala* to cheat, dupe.
لعبه *liɛba* /n pl *liɛab, liɛbaat*/ **1** toy. — /pl *ʔalɛaab*/ **2a** game, sport. *ʔalɛaab il-quwa* field and track sports (including weightlifting). **2b** move, pass, shot etc. in a game or sport. **3** trick, stratagem. *liɛba makfuufa* an obvious play. *ʔalɛaab sihriyya* conjuring tricks. **4** act or turn (in a circus). *ʔalɛaab ʔakrubatiyya* acrobatic turns.
لعبى *liɛabi* /adj pl *-iyya*/ feckless, frivolous.
لاعب *laaɛib*[1] /n */ **1** player. **2** (circus) performer.
ملعوب *malɛuub* **1** /pva/ ‖*di kaanit malɛuuba* that was deliberate, that was no fluke. - *da malɛuub fii [coarse]* he's a queer. **2** /n pl *malaɛiib*/ trick. *ɛamalu fiyya malɛuub* they played a trick on me.
لعاب *luɛaab* /n/ saliva.
لعوب *laɛuub* /adj invar/ dissolute.
لعّيب *laɛɛiib* /n pl *laɛɛiiba*/ (skilled) player. *ya laɛɛiib* what a pro!

ملعب *malɛab* /n pl *malaaɛib*/ **1** area where a game is played, athletics field, pitch, (tennis) court etc. **2** playground. **3** playpen
ملعبه *malɛaba* /n/ one played around with or played tricks on, plaything.
ملعب *mulɛab* /adj invar/ **1** socially attentive (of a man). **2** seductive (of a woman, usually with the accompanying connotation of being sexually amenable).
ألعوبه *ʔulɛuuba* /n pl *ʔalaɛiib*/ trick, stratagem.
ألعبان *ʔulɛubaan* /adj invar/ cunning and treacherous.
اتلعب *ʔitlaɛab* /vi/ to be played. *ʔil-liɛba di b-titliɛib bi-ɛaṣaaya mil-xafab* this game is played with a wooden stick. - iva *mitliɛib*.

لعّب *laɛɛab, laɛɛib* /vt/ to cause to play. *laɛɛab il-ɛayyil* have the child play! play with the child! ‖*laɛɛab ḥawagb-u* he wiggled his eyebrows. - vn *talɛiib*; ava/pva *milaɛɛab*.
لاعب *laaɛib*[2] /vt/ to play with, have a game with. *laaɛib il-ɛayyil* play with the child! *tilaɛib-ni kutfiina* will you have a game of cards with me? - vn *milaɛba*; ava/pva *milaaɛib*.
اتلاعب *ʔitlaaɛib* /vi/ **1** to play a match or the like with one another. **2**↑ to play around, play tricks. *huwwa-na malɛabt-ak titlaaɛib biyya* am I your plaything to do with as you like? *ʔit-talaaɛub fil-mizaniyya* monkeying with the budget. - vn *talaaɛub*↑; ava *mitlaaɛib, mutalaaɛib*↑.

ل ع ب ط
لعبط *laɛbaṭ* **1** /vt/ to distort, twist (out of shape). *ʔil-farraan laɛbaṭ il-ɛeef* the baker spoilt the shape of the (loaves of) bread. **2** /vi/ to twist or contort oneself. *ʔis-samak bi-ylaɛbaṭ fil-mayya* the fish weave about in the water. - vn *laɛbaṭa*; ava/pva *milaɛbaṭ*.
ملعبط *milaɛbaṭ* (also *fiṭiir milaɛbaṭ*) /coll n/ large pastry consisting of many layers of dough and clarified butter or cream, baked and eaten with cream, honey or cheese (more commonly called *mifaltit*).
اتلعبط *ʔitlaɛbaṭ* /vi/ **1** to twist or contort oneself. *ʔir-raqqaaṣa tlaɛbaṭit zayy it-tiɛbaan* the dancer twisted herself like a snake. **2** to be twisted or contorted. - ava/iva *mitlaɛbaṭ*.

ل ع ب ك
لعبك *laɛbik* /vt/ to tangle. *ʔil-quṭṭa laɛbikit id-dubaara* the cat got the string in a tangle. - vn *laɛbaka*; ava/pva *milaɛbik*.
لعبكه *laɛbaka* /n pl *laɛabiik*/ tangle, confusion, mess. *ʔif-fabaka kull-a-ha laɛabiik* the net is a mass of tangles. *ḥayat-ha kull-a-ha laɛabiik* her life is one big mess.
اتلعبك *ʔitlaɛbik* /vi/ to be or become tangled. - ava/iva *mitlaɛbik*.

ل ع د و د
لعدود *laɛduud* /n pl *laɛadiid*/ oaf, clod, simpleton.

ل ع ق
لعق *laɛaq (a)* /vt/ to lick. *qaaɛid yilɛaq fi-ṣawabɛ-u* he's licking away at his fingers. - vn *laɛq, laɛaqaan*; ava *laaɛiq*; pva *malɛuuq*
لعوق *luɛuuq, liɛuuq* /n pl *-aat*/ electuary.
اتلعق *ʔitlaɛaq* /vi/ to be licked. - vn *mitliɛiq*.
لعّق *laɛɛaq* /vt/ to cause to lick. - vn *talɛiiq*; ava *milaɛɛaq*
اتلعّق *ʔitlaɛɛaq* /vi/ passive of *laɛɛaq*. - iva *mitlaɛɛaq*.

ل ع ل[1]
لعلى *laɛli* /adj invar/ bright red

ل ع ل[2] see ع ل ل[2]: *laɛalla*

ل ع ل ط
لعلط *laɛlaṭ* /vi/ to shimmer, gleam. *ʔin-niguum laɛlaṭit* the stars twinkled. *ʔil-ɛarabiyya bi-tlaɛlaṭ* the car is gleaming. *qumaaf milaɛlaṭ* scintillating material. - vn *laɛlaṭa*; ava *milaɛlaṭ*.
اتلعلط *ʔitlaɛlaṭ* = *laɛlaṭ*. - ava *mitlaɛlaṭ*.

ل ع ل ع
لعلع *laɛlaɛ* /vi/ **1a** to shine brightly. *ʔil-qamar bi-ylaɛlaɛ* the moon is shining brightly. *loon milaɛlaɛ* a

bright colour. **1b** to get into a radiant and sparkling mood, feel wonderful. *famma waḥda xallit-ni ʕalaʕlaʕ* one sniff and I was in heaven. **2a** to ring out, sound clear (of a voice). *ṣoot-u baqa ylaʕlaʕ fiʃ-ʃaqqa* his voice echoed round the flat. **2b** to have a splendid noisy time. *ʕamalna ḥafla kunna mlaʕlaʕiin ṣabbaaḥi* we had a party, making a huge din until morning. - vn *laʕlaʕa*; ava *milaʕlaʕ*.

ل ع ل see ² ل ع ل : *laʕalla*

ل ع ن

لعن *laʕan (a)* /vt/ to curse. *(ʃallaah) yilʕan ʃabuu-k* (may God) curse your father! *laʕant is-saaʕa lli twalad fiiha* I cursed the day he was born! ‖ *yilʕan diin ʃumm-ak* (may your mother's religion be damned!) ≈ damn you! - also *naʕal*. - vn *laʕn*; ava *laaʕin*; pva *malʕuun*.

لعنة *laʕna* /inst n, pl *-aat*/ a curse. *ʕalee laʕnit allaah* may God's curse be upon him. ‖ *da raagil laʕna* the man's a plague!

ملعون *malʕuun* /adj pl *malaʕiin*/ **1** cursed, damned, wretched. **2** crafty and treacherous. See further under م ل ع ن

ألعن *ʔalʕan* /elˈ/ more/most wicked or abominable. *ʃinta ʔalʕan mi-lli b-yisraq* you're worse than one who steals. *ʔalʕan mayya hiyya btaaʕit iṭ-ṭurʃi* the worst kind of liquid is that from pickles.

لعين *laʕiinˈ* /adj pl *luʕana*/ accursed.

اتلعن *ʃitlaʕan* /vi/ to be cursed. - iva *mitliʕin*.

التعن *ʃiltaʕan* = *ʃitlaʕan*.

ل ع و ق

لعوق *laʕwaq* /vi/ to toady, indulge in obsequious flattery. - vn *laʕwaqa*; ava *mtlaʕwaq*.

اتلعوق *ʃitlaʕwaq* = *laʕwaq*. - ava *mitlaʕwaq*.

ل غ see ل غ و : *luɣa*

ل غ د

لغد *luɣd* /n pl *liɣaad, luɣuud, luɣúda*/ double chin.

لغّد *laɣɣad* /vi/ to develop a double chin. - vn *talɣiid*; ava *milaɣɣad*.

ل غ ز

لغز *luɣz* /n pl *ʔalɣaaz*/ **1** (verbal or manual) puzzle (to be solved for fun). *kitaab ʔalɣaaz* a puzzle book. **2** enigma, mystery.

ل غ ط

لغط *laɣaṭ* /n/ **1** *[path]* (heart) murmur. **2** hum of conversation. ‖ *fii laɣaṭ kitiir fil-mawḍuuʕ da* there is a lot of gossip about this subject.

ل غ غ

لغ *laɣɣ (u)* /vi/ **1** to lap with the tongue. **2** to eat and drink in a greedy and disgusting fashion. ‖ *baṭṭal il-laɣɣ illi bi-tluɣɣ-u da* ≈ stop eating so piggishly! - vn *laɣɣ*; ava *laaɣig*.

لغّغ *laɣɣaɣ* /vt/ *[rur]* to force-feed. - vn *talɣiiɣ*; ava/pva *mulaɣɣaɣ*.

اتلغّغ *ʃitlaɣɣaɣ* /vi/ to be force-fed. - iva *mitlaɣɣaɣ*.

ل غ ل غ

لغلغ *laɣlaɣ* /vt/ to force-feed. - vn *laɣlaɣa*; ava/pva *milaɣlaɣ*.

لغلوغ *laɣluuɣ* /n pl *laɣaliiɣ*/ root (usually of the tongue).

لغلوغة *laɣluuɣa* = *laɣluuɣ*.

اتلغلغ *ʃitlaɣlaɣ* /vi/ to be force-fed. - iva *mitlaɣlaɣ*.

ل غ م

لغم *laɣm, luɣm, laɣam* <T *lağım*> /n pl *ʔalɣaam*/ (explosive) mine.

لغّم *laɣɣam* /vt/ to mine, plant mines in. ‖ *ʃil-ḥitta mlaɣɣama buliiṣ* the place is stiff with police. - *geeb-u mlaɣɣam* he's loaded (with money). - vn *talɣiim*; ava/pva *milaɣɣam*.

اتلغّم *ʃitlaɣɣam* /vi/ to be mined, be planted with mines. - iva *mitlaɣɣam*.

ل غ م ص see ل غ م ط : *laɣmaṣ, ʃitlaɣmaṣ*

ل غ م ط

لغمط *laɣmaṭ* (also *laɣmaṣ*) /vt/ to smear, soil. *ʃidee milaɣmaṭa fukulaata* his hands are smeared with chocolate. - vn *laɣmaṭa*; ava/pva *milaɣmaṭ*.

اتلغمط *ʃitlaɣmaṭ* (also *ʃitlaɣmaṣ*) /vi/ to be smeared, be soiled. - iva *mitlaɣmaṭ*.

ل غ و

لغة *luɣa* /n pl *-aat*/ **1** language. *ʃil-luɣa l-ʃingiliziyya* the English language. **2** speech, manner of speaking. *luɣit iṣ-ṣiʕiid* the speech of Upper Egypt.

لغوة *laɣwaˈ* /n pl *-aat*/ language, speech.

لغوى *luɣawi, laɣawiˈ* **1** /adj/ linguistic. *ʃil-magmaʕ il-luɣawi* the Arabic Language Academy of Egypt. **2** /n */ linguist.

لاغى *laaɣa* /vt/ **1** to make conversational overtures to, approach in a pleasant and friendly way. *ḥaaga gaʒabit-ni lii fa-btadeet ʔalaɣii* something attracted me

to him, so I started to draw him into conversation. *laavi l-ɛaskari b-sigaara* give the policeman a cigarette to break the ice. **2** *[magic]* to converse with (spirits, in their own tongue). - vn *milaʏiyya*; ava *milaavi*.
اتلاغى ʔitlaaʏa /vi/ passive of *laaʏa*. - iva *mitlaavi*.

ل غ و ص

لغوص *laʏwaṣ* **1** /vt/ to smear, soil. *laʏwaṣt^{i} ɋamiiṣ-i zeet* I got my shirt smeared with oil. **2** /vi/ to act messily. *ʔil-ɛayyil laʏwaṣ fil-ʔakl* the child made a mess with his food. ‖ *laʏwaṣna fil-mawḍuuɛ* we became embroiled in the matter. - vn *laʏwaṣa*; ava/pva *milaʏwaṣ*.
لغوصة *laʏwaṣa* /n pl *laʏawiiṣ*/ mess. *dool ʃiwayyit laʏawiiṣ fayḍiin min il-ʔakl* they're (just) some messy bits of left-over food.
اتلغوص ʔitlaʏwaṣ /vi/ to be or become smeared, become soiled. - ava/iva *mitlaʏwaṣ*.

ل غ ى

لغى *laʏa (i)* /vt/ to make void, annul. *laʏeet l-ittifaaɋ leeh* why did you cancel the agreement? *ʔis-sawra lamma gat laʏit il-ʔaḥzaab kull-a-ha* when the revolution came it abolished all political parties. - vn *laʏy, laʏayaan*; ava *laaʏi*; pva *malʏi*.
لاغى *laaʏi* /adj */ annulled.
اتلغى ʔitlaʏa /vi/ to be made void, be annulled. *bi-ṣuduur il-qanuun it-taani ʔitlaʏa l-ʔawwalaani* with the promulgation of the second law, the first became void. - iva *mitliʏi*.
ألغى ʔalʏa↑ = *laʏa*. - vn ʔilʏa; ava *mulʏi, milʏi*.

ل ف ت 1

لفت *lafat (i)* /vt/ **1** to turn, redirect. *ʔilfit raas-ak in-naḥya t-tanya* turn your head the other way. **2** to draw (attention). *ɛaayiz yiḥiss innu b-yilfit naẓar ʔaṣḥaab-u* he wants to feel that he attracts the attention of his friends. *lafat naẓar-i lil-muʃkila* he directed my attention to the problem. ‖ *laft^{i} naẓar [admin]* warning that further negligence will be subject to disciplinary action. - vn *laft, lafataan*; ava *laafit*; pva *malfuut*.
لفتة *lafta^{1}* /n pl *-aat*/ **1** instance noun of *laft*. **2** gesture. *di tibɋa lafta kwayyisa nnina nzuur-u fil-mustaffa* it would be a nice gesture for us to visit him in hospital.
لافتة *lafta^{2}↑* /n pl *-aat*/ notice, sign. - also *yafta*.
تلفيتة *talfiita* /n pl *-aat*/ glance aside. *ma-fii-ʃ talfiita b-abuṣṣ^{i} ma-laɋet-ʃ if-fanṭa* I just looked away for a second and the bag was gone. *hiyya talfiita kaan in-nahaar xiliṣ* before you could say Jack Robinson the day was over.
اتلفّت ʔitlaffit /vi/ to look from side to side. *wi-nta bi-tsuuɋ ma-titlaffit-ʃ* don't keep looking about when you drive! ‖ *ḥ-axallii yimʃi yitlaffit waraa* I'll put him in fear for his life! - ava *mitlaffit*.
التفت ʔiltafat /vi/ **1** to turn one's face and look. **2** to give one's attention. *ʔiltifit li-ʃuʏl-ak* pay attention to your work! - vn *ʔiltifaat*; ava *miltifit*.
استلفت ʔistalfat, ʔistalfit /vt/ to attract (the attention, the gaze). *ʔistalfat naẓar-i w-ʔana maafi manẓar il-baḥr* the view of the sea caught my eye as I was walking. ‖ *ḥaaga ma-tistalfit-ʃ in-naẓar* a trivial thing. - vn *ʔistilfaat*; ava *mistalfit, mustalfit*.

ل ف ت 2

لفت *lift^{1}* /coll n/ turnip(s).
لفتة *lifta* /unit n, pl *-aat*/ a turnip.
لفتاية *liftaaya* = *lifta*.

ل ف ت 3

لفت *lift^{2}* <Engl> /n/ **1** hydraulic car lift. **2a** lift, elevator. **2b** dumb waiter, service lift.

ل ف ح

لفح *lafaḥ (a)* /vt/ **1** to catch (of wind etc.). *ʔil-hawa lafaḥ-u* a gust of wind caught him. **2** to catch and affect the colour of (of sunshine, fire etc.). *ʔiʃ-ʃams^{i} lafaḥit wiʃʃ-i* my face caught a touch of sun. - vn *lafḥ*; ava *laafiḥ*; pva *malfuuḥ*.
لفحة *lafḥa* /inst n, pl *-aat*/ a sudden touch. *lafḥit hawa* a gust of wind. *gat-li lafḥit bard* I got a touch of cold.
تلفيحة *talfiiḥa* /n pl *-aat, talafiif*/ narrow woollen scarf worn by men (see Pl.F, 2).- also *tarfiiḥa, talfiiɛa*.
اتلفح ʔitlafaḥ /vi/ passive of *lafaḥ*. - iva *mitlifiḥ*.
اتلفّح ʔitlaffaḥ /vi/ to don a *talfiiḥa*. - ava *mitlaffaḥ*.

ل ف ظ

لفظ *lafaẓ (u)* /vt/ **1** to reject, dismiss. **2** to utter. - vn *lafẓ*; ava *laafiẓ*; pva *malfuuẓ*.
لفظ *lafẓ* /n pl *ʔalfaaẓ*/ (spoken) expression, utterance.
ملافظ *malaafiẓ* /pl n/ language, (spoken) vocabulary. *ʔil-walad da malafẓ-u wiḥʃa* that boy has a nasty turn of phrase. *ḥassin malafẓ-ak* don't be rude!
اتلفظ ʔitlafaẓ /vi/ to be rejected, dismissed. - iva *mitlifiẓ*.
اتلفّظ ʔitlaffaẓ /vi/ to give utterance. *ma-tlaffaẓ-ʃ^{i} b-ḥarf* he didn't utter a word. - ava *mitlaffaẓ*.

ل ف ع

لفع *lafaɛ (a)* /vi/ to cast (upon one's shoulder). *lafaɛt^{i} mlayt-i (ɛala kitf-i)* I threw my wrap over my shoulder.

- vn *lafɛ, lafaɛaan*; ava *laafiɛ*; pva *malfuuɛ*.

اتلفع *ʔitlafaɛ* /vi/ to be cast (upon the shoulder). - iva *mitlifiɛ*.

لفّع *laffaɛ* /vt/ to wrap (s.o., particularly about the head and shoulders). *ʔis-sitt' laffaɛit ibn-a-ha bit-talfiiɛa* the woman wrapped her son around with the scarf. - vn *talfiiɛ*; ava/pva *milaffaɛ*.

تلفيعه *talfiiɛa* /n pl *-aat, talafiiɛ*/ narrow woollen scarf worn by men (see Pl.F, 2). - also *tarfiiḥa, talfiiḥa*.

اتلفّع *ʔitlaffaɛ* /vi/ to be wrapped or wrap oneself (particularly about the head and shoulders). ‖*mitlaffaɛ bi-lsaan-u* insolent. - ava/iva *mitlaffaɛ*.

استلفّع *ʔistilaffaɛ*↓ /vi/ to put on a *talfiɛa*. - ava *mistilaffaɛ*.

ل ف ف

لفّ *laff*[1] *(i)* /vt/ **1a** to wrap, envelop. *liff'-haa-li f-waraq* wrap it in paper for me. *liff-i-lna sgaara* roll us a cigarette. **1b** to wind, twist, coil. *laffit il-xuṣla ɛar-rulooh* she wound the lock of hair round the curler. *laffu l-ɣalɛ* they furled the sail. **2** to cause to turn. *liff ik-kursi naḥyit-i* turn the chair towards me. *ḥuṭṭi d-diqiiq fil-mayya w-liffit* put the flour in the water and stir it around. *ɣaɛadit tiliff il-maxzal* she kept on twirling the spindle. ‖*laff' dmaax-* to get a hold over, influence, as in *laff' dmax-ha b-kilmiteen ḥilwiin* he took her in with a few sweet words, *ʔil-bint' laffit dimaax-u* the girl turned his head. **3a** to move in a circle around, make a circuit of. *ʔil-ʔutubiis laff il-midaan* the bus went round the square. *ʔiz-zaffa laffit il-balad* the procession made a circuit of the village. **3b** to go around, go about. *laffeet il-ḥawaari* I walked about the alleyways. *laffeena ʔurubba kull-a-ha* we travelled all over Europe. **4** to round off, make rounded. *ʔin-naggaar laff il-ʔaṭraaf* the carpenter rounded off the edges. *zarradiyya b-buuz malfuuf* round-nosed pliers — /vi/ **5a** to turn, make a turn. *liff' ʃmaal ɛand ik-kubri* turn left at the bridge. *ʔil-maṣaaṭib laffa daaxil il-ḥagz* the benches run round the walls of the detention cell. *ɣarn' laafif* a curly horn. ‖*laff' maɛa r-riiḥ [naut]* to wear. **5b** to twist, warp. *ʔil-xafab in-naafif ma-yliff'-ʃ* dry wood doesn't warp. **5c** to rotate, revolve. *ɛaɣaarib is-saaɛa bi-tliff' ymiin* the hands of the clock rotate clockwise. *ʔil-ɛagala bi-tliff[a] ɛal-faaḍi* the wheel revolves freely. ‖*ʔid-dinya bi-tliff [prov]* (1) things are always changing. (2) it's a small world. **6** to go around, go about. *laffeet waraa fiʃ-ʃawaariɛ* I followed him about through the streets. *b-aliff' maɛaahum kitiir* I go about with them a lot. ‖*laff' w-daar* to knock around, gain experience here and there, as in *ʔil-waad da laff' w-daar* that kid's been around. **7** to be devious, be wily. *ma-tliff'-ʃ maɛaaya* don't play games with me! - vn *laff, lafafaan*; ava *laafif*; pva *malfuuf*.

¶ *laff[a] ɛala* to take in, dupe.

لفّ *laff*[2] /vn/ ‖*fiṭir laff* rich pastry made with cream eaten with cheese or honey. - *ʔil-laff' wid-dawaraan* (1) beating about the bush. (2) deviousness. - *waraq laff* wrapping paper.

لفّه *laffa* /n/ **1** /pl *-aat*/ instance noun of *laff*[2]. *ʔusṭuwanaat xamsa w-ʔarbiɛiin laffa* 45 r.p.m. gramophone records. *waaxid il-ɛagala laffa* taking the bike for a spin. *laffa ntixabiyya* election campaign tour. — /pl *lifaf*/ **2** parcel, package. **3** roll. *laffit waraq tuwalitt* a roll of lavatory paper. **4** strip of cloth worn wound about the head. **5a** swaddling cloth. **5b** nappy, diaper.

ملفوف *malfuuf* /adj/ cylindrical.

لفافة *lifaafa* /n pl *lafaayif*/ *[Chr]* napkin held over the mouth by a communicant to prevent any of the host falling to the ground.

لفّاف *laffaaf* /n pl *laffaafa, laffafiin*/ **1** person engaged in rolling, coiling etc. **2** loafer.

ملفّ *milaff, malaff* /n pl *-aat*/ **1** folder, file; dossier. *milaff il-xidma* employment record. *milaff il-qaḍiyya* case file. **2** *[text]* tuft of cotton. **3** *[elec]* coil. **4** bow-drill. **5** curve, bend (in a road). *xad il-malaff' gaamid* he took the bend sharply.

اتلفّ *ʔitlaff* /vi/ **1** to be wrapped, be enveloped. ‖*ʔiid-ak titlaff' f-ḥariir* your hand deserves to be wrapped in silk! (to a craftsman in appreciation of his skill). **2** to be wound, be twisted, be coiled. **3** to be turned, be turned round. **4** to be rounded, be rounded off. - iva *mitlaff*.

لفّف *laffif* /vt/ **1** to wind or twist or coil repeatedly. **2** to turn repeatedly. **3** to round off repeatedly. **4** to take around. *laffif-ni maṣr* he took me round Cairo. - vn *talfiif*; ava/pva *milaffif*.

تلافيف *talafiif: ʔumm it-talafiif [zool]* omasum, many-plies. - also *ʔumm if-ʃalatiit, ʔumm il-lafaliif*.

اتلفّف *ʔitlaffif* /vi/ passive of *laffif*. - iva *mitlaffif*.

ل ف ق

لفق *lafaq (u)* /vt/ to baste, tack, sew with temporary stitches. - vn *lafq, lafaqaan*; ava *laafiq*; pva *malfuuq*.

لفّق *laffaq* /vt/ to concoct, fabricate. *laffaqit-lu qaḍiyya* she concocted a case against him, she framed him. - vn *talfiiq*; ava/pva *milaffaq*.

تلفيقه *talfiiqa* /inst n, pl *talafiiq*/ a fabrication.

اتلفّق *ʔitlaffaq* /vi/ to be fabricated, be concocted. - iva *mitlaffaq*.

ل ف ل ف
لفلف *laflif* /vt/ to wrap up. *laflif nafs-u min il-bard* he wrapped himself up against the cold. - vn *laflafa*; ava/pva *milaflaf*.
لفليفه *lufleefa* /n pl *-aat, lafaliif*/ **1** wrap. **2** crease. ‖ *ʕumm il-lafaliif [zool]* omasum, manyplies.
اتلفلف *ʔitlaflif* /vi/ to be wrapped up. - iva *mitlaflif*.

ل ف م ا ن
لافومانو *lavumaanu* <It *lavamano*> /n pl *lavumanaat/ [plumb]* basin, sink.

ل ف ي ه
لفيه *lifeeh* <Fr *levée*> /n pl *-aat*/ (small) support used in work with sheet metal.

ل ق ب
لقب *laqab, laqabˈ* (also *naqbˌ*) /n pl *ʕalqaab*/ **1** title, honorific. **2** family name.

ل ق ح ¹
لاقح *laaqiḥ* /adj */ penniless, broke, scrounging.
لقّح *laqqaḥˈ* /vt/ to dump, throw down or out in a casual or dismissive way. *laqqaḥ il-balṭu ɛak-kursi* he tossed his coat down on the chair. *bi-yiigi fil-yoom nobteen talaata ylaqqaḥ il-biḍaaɛa* he comes two or three times a day to dump off the goods. *ɛarabiyyit-ak ǧidmit ǧawi - laqqaḥ-ha baǧa* your car's completely passed it - why don't you dump it? ‖ *laqqaḥ ɛala-... bi-kalaam* to throw out insulting comments about (s.o.). - *laqqaḥ gittit-u ɛala-* to impose one's presence on (s.o.), as in *kullˈ yoom bi-yiigu ylaqqaḥu gittit-hum ɛaleena* every day they come hanging around us when they're not wanted. - vn *talqiiḥ*; ava/pva *milaqqaḥ*.
تلقيحه *talqiiḥa* /n/ **1** /pl *talaqiiḥ*/ one who imposes himself on others, burdensome boor. **2** /inst n, pl *-aat*/ a dumping.
اتلقّح *ʔitlaqqaḥˈ* /vi/ to be dumped or dump oneself. *ʔiṭ-ṭuub da baqaa-lu fahrˈ mitlaqqaḥ ɛar-raṣiif* those bricks have been sitting there on the pavement for a month. *ʔinta mitlaqqaḥ gambi kida leeh* why have you parked yourself next to me like that? - ava/iva *mitlaqqaḥ*.
استلقح *ʔistalqaḥ* /vi/ to impose oneself (on others). - vn *ʔistilqaaḥ*; ava *mistalqaḥ*.
استلقّح *ʔistilaqqaḥ* /vi/ *[abus]* = *ʔitlaqqaḥ*. - ava *mistilaqqaḥ*.

ل ق ح ²
لقاح *liqaaḥ, liqaaḥ* /n/ **1** pollen. **2** vaccine.
لقّح *laqqaḥ²*, *laqqaḥ* /vt/ **1** to fertilize, fecundate, pollinate. *talqiiḥ ṣinaaɛi* artificial insemination. **2** to inoculate. - vn *talqiiḥ*; ava/pva *milaqqaḥ*.
اتلقّح *ʔitlaqqaḥ²* /vi/ passive of *laqqaḥ²*. - iva *mitlaqqaḥ*.

ل ق د see ق د : *laqad*

ل ق ص ر see ³ق ص ر : *l-uqṣur*

ل ق ط
لقط *laqaṭ (u, i)* /vt/ **1** to gather, collect. *bi-tulquṭ quṭn* she picks cotton. ‖ *laqaṭ nafas-u* he caught his breath. - *ʔil-liḥaam bil-ʔuksijiin yulquṭ nazar-i* oxygen welding blinds me. **2a** to pick up, catch onto. *bi-yulquṭ kullˈ ɣalṭa* he catches every mistake. *ʔil-maɣnaṭiis bi-yulquṭ masamiir* the magnet picks up nails. *mikrufoon ḥassaas bi-yulquṭ dabbit in-namla* a sensitive microphone that picks up the footsteps of an ant (i.e. the slightest sound). ‖ *laqaṭ il-fuula* to see the catch, catch on. - *ǧaaɛid lis-saǧṭa wil-laǧṭa* waiting for anything that may come one's way. **2b** to pick up (a stitch, in knitting). **3a** to take, accept (dye etc.). *bi-yulquṭ is-sabɣa kwayyis* it takes the dye well. **3b** to become impregnated with (a taste or smell). *ʔif-faay laaqiṭ gaaz* the tea smells of paraffin. **4** *[needlew]* to stitch, sew (by hand). *ʔulquṭi d-deel makaan ma tfakk* stitch up the hem where it has come undone. **5** *[phot]* to take an exposure of, snap. ‖ *muftaaḥ il-laqṭ* shutter release (of a camera). - vn *laqṭ, laqaṭaan*; ava *laaqiṭ*; pva *malquuṭ*.
لقطه *laqṭa* /n pl *-aat*/ **1** instance noun of *laqṭ*. **2** *[phot]* exposure, snap. **3** *[cin]* take.
لقطه *luqṭa* /n/ bargain, rare find, lucky find. *ʔil-ɛariis da luqṭa* that bridegroom is a good catch.
لقيط *laqiiṭ* /n pl *luqaṭa*/ foundling.
لقيط *liqiiṭ* /n/ *[agric]* **1** cotton pickings. **2** seed dropped into the furrow behind the plough.
ملقط *malqaṭ* /n pl *malaaqiṭ*/ tweezers. ‖ *(fi-)ṣalqaṭ (fi-) malqaṭ* see *ṣalqaṭ*.
ملقاط *mulqaaṭ* /n pl *malaqiiṭ*/ **1** tweezers. **2** *[slang]* pickpocket.
لقّط *laqqaṭ* /vt/ **1** to pick up one by one. *ʔil-firaax bi-tlaqqaṭ il-ǧamḥ* the chickens peck up the grain. **2** to make final improvements on, smarten up. *baɛdˈ ma nistaɛdil iṣ-ṣaag nilaqqaṭ-u* after straightening the sheet metal we go over it and remove any remaining irregularities. **3** *[agric]* to sow (seeds) by dropping them one by one into the furrow behind the plough. - vn *talqiiṭ*; ava/pva *milaqqaṭ*.

تلقيطة *talqiiṭa* /n pl *-aat*/ defect, fault (on a surface, in material etc.).
اتلقّط *ʔitlaqqaṭ* /vi/ passive of *laqqaṭ*. - iva *mitlaqqaṭ*.
استلقط *ʔistalqaṭ* /vi/ to look for haphazardly or without any special plan. *ʔastalqaṭ-li ʔayy' ʃuɣla mwaqqata* I'm going to look for any temporary job that may come my way. *ʔistalqaṭ-lak ʔayy' ḥaaga mit-tallaaga taṣbiira* take anything you happen to find in the refrigerator as a snack. - vn *ʔistilqaaṭ*; ava *mistalqaṭ*.

ل ق ف
لقف *laqaf (u)* **1** /vt/ to catch, catch hold of. *ʔil-goon laqaf ik-koora* the goalkeeper caught the ball. **2** /vi/ to be laboured (of breathing, heartbeats). *nafas-u b-yulquf* his breathing is laboured. - vn *laqf, laqafaan*; ava *laaqif*; pva *malquuf*.
لقفة *laqfa* /pl *-aat*/ instance noun of *laqf*. *laqfa ḥilwa* a good catch.
لقّافة *laqqaafa* /n pl *-aat*/ water-wheel scoop.
لقّيف *laqqiif* /n pl *laqqiifa*/ catcher (e.g., in an acrobatic performance).
ملقف *malqaf* /n pl *malaaqif*/ **1** device built on a roof for catching the breeze and conducting it to the rooms below (specifically, in old houses, a large wooden shed with a sloping roof open to the north). **2** *malqaf hawa* draught of air. *ʔiwɛa tuqaf fi-malqaf hawa wi-nta ɛarqaan* don't stand in a draught when you're sweating!
اتلقف *ʔitlaqaf* /vi/ to be caught. - iva *mitliqif*.
اتلقّف *ʔitlaqqaf* /vt/ to snatch up, swipe quickly. - ava/pva *mitlaqqaf*.
استلقف *ʔistalqaf* /vt/ to catch (s.th. thrown). - vn *ʔistilqaaf*; ava/pva *mistalqaf*.
¶ *ʔistalqaf ɛala* to long for. *ʔil-waaḥid bi-yistalqaf ɛala gawaab yiigi minnu* I am dying to get a letter from him.
استلقّف *ʔistilaqqaf* = *ʔistalqaf*. - ava *mistilaqqif*.
¶ *ʔistilaqqaf ɛala* = *ʔistalqaf ɛala*.

ل ق ق
لقّ *laqq (u)* **1** /vt/ to rattle (s.th.). **2** /vi/ to make a rattling sound. ‖ *beeḍa bi-tluqq* an egg whose albumen can be felt to move when the egg is shaken (i.e., a bad egg). - *laqq' b-kalaam* (1) to talk a lot of claptrap, run on nonsensically. (2) to speak spitefully. - vn *laqq, laqaqaan*; ava *laaqiq*; pva *malquuq*.
لقّاق *laqqaaq* /adj */ over-talkative.
اتلقّ *ʔitlaqq* /vi/ to be rattled. - iva *mitlaqq*.

ل ق ق ا ن
لقّان *laqqaan* (also *ṣalaat il-laqqaan*) /n/ *[Chr]* ceremony of the washing of the feet.

لقّانة *laqqaana* /n pl *-aat*/ earthenware tub for kneading dough, similar to a *maguur* (see Pl.A, 8), but smaller.

ل ق ل ق
لقلق *laqlaq* **1** /vt/ to make unsteady or unstable, cause to wobble. *laqlaq il-musmaar ʃiwayya* ease the nail sideways a little. **2** /vi/ to be hesitant (in speech). *laqlaq fik-kalaam* to intersperse one's talk with endless ums and ers. - vn *laqlaqa*; ava/pva *milaqlaq*.
ملقلق *milaqlaq* /adj */ indecisive.
لقلاق *liqlaaq* /n/ tell-tale, tale-bearer.
اتلقلق *ʔitlaqlaq* /vi/ **1** to be made unsteady or unstable. **2** to wobble. - ava/iva *mitlaqlaq*.

ل ق م
لقم *laqam (u)* /vt/ to take a bite of. *ɛammaal yilqum is-sandawiʃ* he's biting away at the sandwich. *ʔil-kalb' laqam rigl-i* the dog took a bite out of my leg. - vn *laqm, laqamaan*; ava *laaqim*; pva *malquum*.
لقمة *laqma* /inst n, pl *-aat*/ a bite.
لقمة *luqma* /n pl *-aat, luqam*/ **1** morsel, mouthful (especially of bread). *luqma b-gibna* a bit of bread and cheese. *ma-fii-ʃ fil-beet wala luqmit ɛeeʃ* there's not even a scrap of bread in the house. *ḥaḍḍaru luqma* they prepared a bite to eat. ‖ *luqmit il-qaaḍi* a confection consisting of balls of deep-fried batter dipped in honey, syrup or cream. - *huwwa zayy il-luqma fiz-zoor* he sticks in one's craw. - *ʔil-luqma l-haniyya tkaffi miyya [prov]* ≈ a meal in pleasant company goes a long way. **2** basic sustenance, keep. *ʔil-fuqara b-yinfiɣlu bil-gary' wara luqmit-hum* the poor are busy trying to keep body and soul together. *laazim tiftaɣali b-luqmit-ik* you must earn your keep. **3** *[mech]* **3a** jaw of a chuck. **3b** leaf of a leaf spring. **3c** wheel chock. **3d** (loosely) any small flat piece of metal. **4** *[mus]* short reed acting as the mouthpiece of an *ʔarɣuul*. **5** motif in tent appliqué designs (see Pl.H, 21).
لقّم *laqqam* /vt/ **1** to feed in small quantities, feed bit by bit. *talqiim il-ʔaṭfaal* spoon-feeding of children. ‖ *laqqamt-u gneeh* I slipped him a pound. **2** to feed, charge. *laqqamt' ik-kanaka bunn* I put the proper amount of coffee into the cannikin. *laqqam il-bunduqiyya* he loaded the rifle. ‖ *talqiim iz-zarɛ* placing fertilizer under plants in handfuls. - vn *talqiim*; ava/pva *milaqqam*.
تلقيمة *talqiima* /n pl *-aat, talaqiim*/ a sufficient quantity for one feeding, loading or charging. *ɛandina talqiimit bunn' waḥda bass* we only have enough coffee for one pot.
اتلقّم *ʔitlaqqam* /vi/ passive of *laqqam*. - iva *mitlaqqam*.

ل ق ن ¹

لقّن *laqqan* /vt/ **1** to prompt. *lamma kunt*^{i} *b-atkallim fit-tilifoon laqqanuu-ni k-kalaam* when I was speaking on the phone they told me what I ought to say. *bi-ylaqqin il-mumassiliin lamma yinsu k-kalaam* he prompts the actors when they forget their lines. **2** *[Isl]* to instruct (a deceased person at his grave) how to reply to anticipated questions by the two angels charged with questioning the dead. **3** *[mil]* to brief. - vn *talqiin*; ava/pva *milaqqan*.

ملقّن *mulaqqin* /n */ prompter.

اتلقّن *ʔitlaqqan* /vt/ passive of *laqqan*. *huwwa tlaqqan ir-radd*^{i} *qabl*^{i} *ma yitsiʔil* he was given the answer before the question was asked. - iva *mitlaqqin*.

ل ق ن ² see ل ق ق ا ن: *laqqaan, laqqaana*

ل ق و

لقوة *laqwa* /n/ tetanus (as a disease of cattle).

ل ق ى ¹

لقى *laqa*^{i}, *liqi (a)* /vt/ **1** to find, come upon. *laqeet ik-kitaab iḍ-ḍaayiʕ* I found the book that was lost. ‖*laqa yaakul* (usually in negative contexts) to make enough money to keep alive, as in *hiyya miʃ laqya taakul* she's hardly managing to make a living, *huwwa-ḥna laqyiin naakul ʕaʃaan niruuḥ ʔiskindiriyya* we're hardly managing to get by, let alone go off to Alexandria! **2** to realize, perceive. *laqeet in-naas bi-tbuṣṣ-i-li* I realized that people were looking at me. *laqu l-ʔutubiis miʃ raayiḥ il-ḥitta lli humma rayḥin-ha* they found that the bus wasn't going where they were going. — *tilqaa* **3** modal of probability. *tilqaa-ku ma-kaltuu-ʃ* you probably haven't eaten yet, I don't suppose you've eaten yet. *tilqaa ma-gaa-ʃ ʕalaʃaan ʕayyaan* he probably hasn't come because he's ill. - vn *laqayaan*; ava *laaqi*; pva *malqi*.

لقا *luqa* /n/ meeting, encounter. *luqaa-na maʕa baʕḍ* our meeting with one another.

لقاء *liqaaʔ*$^{\uparrow}$ /n pl *-aat*/ encounter, meeting. *ʔila l-liqaaʔ* until we meet again, *au revoir*.

تلقائى *tilqaaʔi*$^{\uparrow}$ /adj/ spontaneous.

¶ *tilqaʔiyyan* /adv/ spontaneously.

اتلقى *ʔitlaqqa* = *ʔistilaqqa*. - ava *mitlaqqi*.

لاقى *laaqa* /vt/ **1** to discover, perceive. *ʔadawwar ʕala mraat-i ʔalaqii-ha xaragit* I look for my wife and find that she has gone out. *tilaqii ʔaṣlaʕ* you'll find him bald. **2** to meet. *ḥ-alaqii-k feen* where shall I meet you? ‖*laqii-ni wala tvaddii-ni* ≈ a warm welcome is worth more than a meal. - *waaḥid yiḍrab wit-taani ylaaqi* one is tough and the other is kind. — *tilaaqi* **3** modal of probability. *tilaaqii-k ma-kunt*^{i}*-ʃ ʕaawiz tiigi* you probably just didn't want to come. *tilaqii qaaʕid ʕandu fil-beet* he's probably at home now. *tilaaqi ʔinn*^{i} *fii ʕandu maʃaakil kitiira* he probably has a lot of problems. - vn *milaqiyya*; ava *milaaqi*.

¶ *yilaqii-ha min ... walla min ...* ≈ to be beset by troubles. *ʔalaqii-ha mineen walla mineen* I am plagued by difficulties.

اتلاقى *ʔitlaaqa* /vi/ **1** to be found. *ʔitlaaqit taḥt*^{i} *koom kutub* it was found under a pile of books. **2** to meet one another. *ḥa-nitlaaqa ʕan-naṣya* we'll meet on the corner. - ava/iva *mitlaaqi*.

ألقى *ʔalqa*$^{\uparrow}$ /vt/ **1** to recite, make or deliver (a speech, recitation etc.). *ʔalqa qaṣiida gamiila min ʔalf*^{i} *leela w-leela* he recited a lovely poem from The Thousand and One Nights. *nooʕ min il-ɣuna been il-ɣuna wil-ʔilqaaʔ* a kind of singing which is between singing and recitation. **2** to throw down, drop. *ʔil-qanaabil illi ḥa-yilqii-ha l-ʕadiww* the bombs which the enemy will drop. - vn *ʔilqaaʔ*; ava *mulqi*; pva *mulqa*.

التقى *ʔiltaqa* /vt/ **1** to find, perceive. *ʔiltaqa nafs-u ntaqal min ig-ganna li-gihannam* he found himself transported from Heaven to Hell. **2** to encounter, come across. *ʔiltaqeet-u fiʃ-ʃaariʕ w-ana maaʃi* I found it in the street as I was going along. *dawwar iz-ziir ʕala ɣaṭaa lamma ltaqaa [prov]* (the water-jar looked for its lid until it found it) ≈ every Jack has his Jill. — /vi/ **3** to meet together, get together. *ḥa-niltiqi ʔimta* when shall we get together? - ava *miltiqi*.

استلقى *ʔistalqa: ʔistalqa waʕd-ak* receive your due! you're in for it now!

استلقّى *ʔistilaqqa* /vt/ to receive. *bi-yistalaqqa t-taʕlimaat mil-ʕumda* he gets his instructions from the mayor. *ʔistilaqquu-ni biʃ-fitiima* they received me with insults. ‖*ruuḥ istilaqqa waʕd-ak* (go and meet your fate!) go if you must, but don't say you haven't been warned! - *wiqiʕt*^{i} *mis-sama wi-nta stilaqqet-ni* (I fell from the sky and you caught me) I was in desperate straits and you helped me. - ava *mistalaqqi, mistalaqqa*.

ل ق ى ²

لقى *laqa*^{2} *(i)* /vt/ *[text]* to string (a warp thread on a loom). - vn *laqy*; ava *laaqi*; pva *malqi*.

لقّى *laqqa* /vt/ *[text]* to string (warp threads on a loom). - vn *talqiyya*; ava/pva *milaqqi*.

ملقّى *milaqqi* /n */ *[text]* draw-frame operator.

ل ك ر

لاكر *lakar* <Engl> /n/ lacquer (coating on a gramophone record).

ل ك ز

لكز *lakaz (u, i)* /vt/ to hit, poke, dig (especially with the elbow). *kull' fwayya yilkuz ʕaxuu b-ʕiid-u f-gamb-u* he keeps digging his brother in the side with his arm. - vn *lakz, lakazaan*; ava *laakiz*; pva *malkuuz*.

لكزة *lakza* /inst n, pl *-aat*/ a hit, a poke, a dig (especially with the elbow).

اتلكز *ʕitlakaz* /vi/ to be hit, poked or dug (especially with the elbow). - iva *mitlikiz*.

ل ك س

لوكس *luks* <Fr *luxe*> /adj invar/ de luxe. *ɛaayiz ʕasaafir f(id-daraga) il-luks' walla balaaf* I want to travel luxury class or not at all. ‖ *ħaaga luks* the perfect thing, just the thing. *-faqqa luks* a flat meeting certain government specifications stipulating high quality. *-faqqa nuṣṣ' luks* a flat one grade below *faqqa luks*. *-faqqa luks' luks* a flat of the highest grade according to these same specifications.

ل ك ش

لكس *lukf* /coll n/ *[rur]* small undeveloped melon(s).

لكسه *lukfa* /unit n, pl *-aat*/ *[rur]* a small undeveloped melon.

لكسايه *lukfaaya = lukfa*.

ل ك ع

لكع *likiɛ* /adj */ given to dawdling or loitering.

لكعه *lakaɛa* /n/ dawdling, loitering. *da mif waqt' lakaɛa* this is no time to dawdle.

لكعى *likaɛi* or *lukaɛi* /pl *-yya*/ **1** /adj/ given to dawdling or loitering. **2** /n/ dawdler.

لكاعه *lakaaɛa = lakaɛa*.

تلكيع *talkiiɛ = lakaɛa*.

اتلكّع *ʕitlakkaɛ* /vi/ to loiter, dawdle. *min ṣuɣr-a-ha ʕiḥibb' titlakkaɛ fil-maḥallaat* ever since she was young she's had a liking for hanging around the shops. - ava *mitlakkaɛ*.

اتلاكع *ʕitlaakiɛ* /vi/ to dawdle, take (too much) time. *bi-yitlaakiɛ fiʃ-fuɣl' wi-yɛaṭṭal maṣaaliḥ in-naas* he wastes time over the work and so damages people's interests. - ava *mitlaakiɛ*.

ل ك ك

لكّ *lakk (u)* /vi/ to chatter, prattle. - vn *lakk, lakakaan*; ava *laakik*.

لكّاك *lakkaak* /adj */ over-talkative, given to chattering and prattling.

اتلكّك *ʕitlakkik* /vi/ to search for or pick on some trivial matter as an excuse (for anger etc). - ava *mitlakkik*.

ل ك ل ك

لكلك *laklik* /vt/ to do (s.th) in a slapdash way, do (s.th.) carelessly and badly. - vn *laklaka*; ava *milaklik*.

اتلكلك *ʕitlaklik* /vi/ to be done in a slapdash way, be done carelessly and badly. - iva *mitlaklik*.

¶ *ʕitlaklik ɛala* to pick on (s.th.) as a pretext. *ʕitlaklik-li ɛala kilma w-ḍarab-ni* he used a word I said as an excuse to hit me.

ل ك م

لكم *lakam (i)* /vt/ **1** to hit with the fist, punch. **2** to surfeit, cause to feel over-full (of food). *ʕid-dihn' b-yilkim* fat makes for satiety. *ʕil-ʕakl' b-yilkim* ≈ the food is so heavy and filling that one can't draw a proper breath. - vn *lakm*; ava *laakim*; pva *malkuum*.

لكمه *lakma* /inst n, pl *-aat, lakamaat*/ a blow with the fist, a punch.

لكّميّة *lukkamiyya* /n pl *-aat, lakakiim*/ blow with the fist, punch.

اللكّيم *ʕil-lukkeem* (also *ʕabu l-lukkeem*) /n/ *[path]* mumps.

اتلكم *ʕitlakam* /vi/ **1** to be given a blow with the fist, be punched. **2** to be surfeited, be made to feel over-full. - iva *mitlikim*.

لاكم *laakim* /vi/ to box, fight with the fists. - vn *mulakma*; ava *milaakim*.

ملاكم *mulaakim* /n */ boxer, prize-fighter.

اتلاكم *ʕitlaakim* /vi/ to fist-fight (with o.a.) - ava *mitlaakim*.

ل ك ن [1]

لكنه *lakna, lukna* /n pl *-aat*/ foreign and defective accent.

ل ك ن [2] see ل ا ك ن : *lakin, laakin, lakiin*

ل ك ن د

لوكانده *lukanda* <It *locanda*> /n pl *-aat*/ hotel.

ل ك و ر

لكور *lakoor* <Fr *raccord*> /n pl *lawakir, lakoraat*/ pipe coupling.

ل ك ى ه

لاكيه *lakeeh* <Fr *laqué*> /n pl *-aat*/ lacquer, lac, shellac.

ل ل ل ي

اللالى *ʕil-lalli* /n/ playfulness, light-heartedness.

ʔil-ɣird' b-yilɛab il-lalli the monkey is frolicking about. *baṭṭal fuṷl il-lalli* stop mucking about!

ل ل ى ¹
لالا *laala'* /vi/ to glitter, shimmer. *ʔin-nuguum bi-tlaali* the stars shine. - vn *milaliyya*; ava *milaali*. see further under ل و ل ى

ل ل ى ²
لالى *laala²* <Copt> /vi/ to ring out (of voice). ‖*da ṭuul il-leel yilaali* all night long he calls out (from pain). - vn *milaliyya*, ava *milaali*.

ل م
لم *lam↓* /neg particle/ never. *gamaal lam raʔat-u ɛeen* beauty the like of which has never been seen.

ل م ا ن
لومان، ليمان *lumaan* <Gr *limên*> /n pl *-aat*/ prison.
لومانجى، ليمانجى *lumangi* /n pl *-yya*/ one who is always in and out of prison, jailbird.

ل م ب
لمبه *lamba* (also *lamḍa↓* and *lanḍa↓*) <It *lampa*> /n pl *lambaat, lumaḍ, lunaḍ*/ **1** lamp. *lambit maktab* desk lamp. *lambit gaaz* paraffin lamp. *lamba ṣafiiḥ* or *lamba fawwaaṭi* small oil-lamp (see Pl.B, 2). ‖*lamba ḍaṭɛiyya* (welder's) acetylene torch. **2** light-bulb. ‖*lambit radyu* radio valve.

ل م ب د -
لمبدير *lambadeer* <Fr *lampadaire*> /n pl *-aat*/ standard lamp.

ل م ح
لمح *lamaḥ (a)* /vt/ to glimpse, catch sight of. - vn *lamḥ, lamaḥaan*; ava *laamiḥ*; pva *malmuuḥ*.
لمحه *lamḥa* /inst n, pl *-aat*/ a glimpse. *fi-lamḥit baṣar* in the twinkling of an eye.
لمّاح *lammaaḥ↑* /adj */ perceptive.
ملامح *malaamiḥ* /pl n/ facial features. ‖*baayin ɛalee malaamiḥ il-ɣaḍab* he looks angry.
اتلمح *ʔitlamaḥ* /vi/ to be glimpsed, be caught sight of. - iva *mitlimiḥ*.
لمّح *lammaḥ* /vi/ to hint. *lammaḥ-li ʔinnu ɛaayiz ḍirfeen* he hinted to me that he wanted some money. *lammaḥ-li b-ɣaḍab-u* he gave a hint of his anger. ‖*lamma n-nahaar yilammaḥ* when the day first breaks. - vn *talmiiḥ*; ava *milammaḥ*.
اتلمّح *ʔitlammaḥ* /vi/ **1** (impersonal) passive of *lammaḥ*. *mugarrad ma tlammaḥ-lu fihim ɛala ṭuul* as soon as a hint was dropped he understood straight away. **2** to catch a glimpse. *ʔitlammaḥt' bii w-ʔana maaʃi* I caught sight of him while I was walking along. - ava/iva *mitlammaḥ*.

ل م ز
لمّز *lammiz* /vi/ assonant intensifier used in conjunction with *ɣammiz* (q.v.). *taɣmiiz wi-talmiiz* nudging and winking. - vn *talmiiz*.
اتلمّز *ʔitlammiz* /vi/ assonant intensifier used in conjunction with *ʔitɣammiz* (q.v.). - ava *mitlammiz*.

ل م س
لمس *lamas (i)* /vt/ **1** to touch. *ḥaawil tilmis rukab-ak bi-raas-ak* try to touch your knees with your head. **2** to perceive, sense. *lamast innu mitdaayiḍ* I sensed that he was upset. - vn *lams, lamasaan*; ava *laamis*; pva *malmuus*.
لمسة *lamsa* /inst n, pl *-aat*/ a touch.
ملموس *malmuus↑* /adj/ tangible, palpable, concrete. *ʔana ɛaayiz nataayig malmuusa* I want tangible results.
ملمس *malmas↑* /n pl *malaamis*/ **1** touch, feel. *ḍumaaf naaɛim il-malmas* cloth soft to the touch. **2** feeler, antenna, tentacle.
اتلمس *ʔitlamas* /vi/ **1** to be touched. **2** to be perceived, be sensed. - iva *mitlimis*.
لمّس *lammis* /vt/ to cause or allow to touch. *lammis-ni l-ḍumaaf* he gave me the cloth to feel. - vn *talmiis*; ava/pva *milammis*.
اتلمّس *ʔitlammis* **1** /vt/ to probe, search out. *ʔitlammis-li l-ʔaɛzaar* he tried to find excuses for my behaviour. **2** /vi/ to be caused or allowed to touch. - iva *mitlammis*.
لامس *laamis* /vt/ to touch, come into contact with. *ʔil-ʔaslaak lamsit baɛḍ-a-ha w-ḥaṣal maas* the wires touched and a short-circuit occurred. - vn *milamsa*; ava/pva *milaamis*.
اتلامس *ʔitlaamis* /vi/ to touch one another, come into mutual contact. - ava *mitlaamis*.
التمس *ʔiltamas* /vt/ to request, solicit (s.th. from s.o.). - vn *ʔiltimaas*; ava *miltimis*.
التماس *ʔiltimaas* /n/ **1** request, solicitation. **2** petition. **3↓** *[elec]* short-circuit.
ملتمس *multamas* /n/ petition.

ل م ض ¹
لمض *limiḍ* /adj * and pl *lumaḍa*/ loquacious, voluble.
لماضه *lamaaḍa* /n/ loquacity, volubility.

اتلمّض، تلمّظ ʔitlammaḍ /vi/ to smack the lips. *kull' m-adxul il-maṭbax ʔalaqii bi-yitlammaḍ* every time I go into the kitchen I find him smacking his lips. ‖*kal wi-tlammaḍ* he ate and smacked his lips too, he thoroughly enjoyed the meal. - ava *mitlammaḍ*.

اتلامض ʔitlaamiḍ /vi/ **1** to talk a lot. **2** to engage in repartee. - ava *mitlaamiḍ*.

[2] ل م ض see ل م ب : *lamḍa*

ل م ظ see [1] ل م ض

ل م ع

لمع *lamaʕ (a)* /vi/ to shine. - vn *lamʕ, lamaʕaan*; ava *laamiʕ*.

لمعة *lamʕa* /n/ shine, lustre. ‖ *ʔabu lamʕa* epithet for an extravagant boaster (after a popular comedian of the same name).

لمعي *lamʕi* /adj/ shiny.

لمعيّة *lamʕiyya* /n/ brightness, shine.

ألمع ʔalmaʕ /el/ more/most shiny.

لمّاع *lammaaʕ* /n pl *lammaaʕa, lammaʕiin*/ polisher, one who polishes.

لمّاعة *lammaaʕa* /n pl *-aat*/ polishing cloth.

لمّيع *lammiiʕ* /adj/ gleaming, shining. *wid-dahab fii lammiiʕ wi-fii maṭfi* as for gold, there is shiny (gold) and dull (gold). ‖*gild' lammiiʕ* patent leather. - *waraq lammiiʕ* glossy photographic paper.

لمّع *lammaʕ* /vt/ to polish, make shine. *lammaʕ gazmit-ak* polish your shoes! - vn *talmiiʕ*; ava/pva *milammaʕ*.

تلميعة *talmiiʕa* /inst n, pl *-aat*/ a polishing.

اتلمّع ʔitlammaʕ /vi/ to be polished. - iva *mitlammaʕ*.

استلمع ʔistalmaʕ /vt/ **1** to consider shiny. **2** to select for shininess. *ʔistalmaʕ gazma wi-ʃtirii-ha* choose a shiny pair of shoes and buy them. - ava *mistalmaʕ*.

ل م ل م

لملم *lamlim* **1** /vt/ to gather up, gather together. *lamlim ḥagaat-ak wi-mʃi* gather up your stuff and get out! **2** /vi/ to mix with people below one's station, go slumming. - vn *lamlama*; ava/pva *milamlim*.

اتلملم ʔitlamlim /vi/ to be gathered up, be gathered together. - iva *mitlamlim*.

ل م م

لمّ *lamm (ı)* /vt/ **1** to collect, gather. *limm il-waraq wi-rmii fis-sabat* collect up the paper and throw it in the basket. *lammit il-ɣasiil min ʕal-ḥabl* she gathered the washing from the line. *ʔilli ylimm-u min hina ybaʕtar-u min hina* whatever he acquires from one quarter, he squanders in another. ‖*limm' ʔiid-ak* (1) to make a fist. (2) don't be so extravagant. **2** to hold in check. *limm' lsaan-ak* hold your tongue! *ʔilli mʕaa kilma ylimm-a-ha* he who has a word (of reproach, or protest) should keep a check on it. **3** *[soccer]* to take over (a ball). — /vi/ **4** to come together, gather. *ʔin-naas ḥa-tlimm[a] ʕaleena* people will gather around us. **5** to heal over (of a wound). - vn *lamm, lamamaan*; ava *laamim*; pva *malmuum*.

لمّة *lamma'* /n/ crowd, mob. ‖ *ʔil-baraka fil-lamma* ≈ the more the merrier. - *ʔil-ḥikaaya baqit lamma* it became pandemonium.

لامة *limaama* /n/ riff-raff, rabble.

لمّام *lammaam* /n */ collector, gatherer. *da lammaam sabaaris wi-zbaala* he collects cigarette ends and rubbish.

ملمّ *malamm* /n pl *-aat*/ gathering place. *beet-i malamm* everyone congregates at my house.

اتلمّ ʔitlamm /vi/ **1** to be collected, be gathered. **2** to gather, mass, assemble. *ʔin-naas itlammit ʕaleena* people gathered around us. *ʔitlammu ʕalee wi-ḍarabuu* they ganged up on him and beat him up. - ava/iva *mitlamm*.

¶ *ʔitlamm[a] ʕala* (1) to get in contact with (s.o.). *ma-ʕandii-ʃ il-ʕinwaan wi-miʃ ʕaarif ʔatlamm[a] ʕaleeha* I don't have the address and I don't know how to get in touch with her. *ʔitlamm[a] ʕala kabʃit ʕiyaal ʂuyyaʕ* he joined up with a bunch of no-good kids. (2) to take a hold on (o.s.), get a grip on (o.s.). *miʃ ʕaadir ʔatlamm[a] ʕala nafs-i* I can't get a hold of myself, I can't pull myself together. *miʃ ʕaarif ʔatlamm[a] ʕala gism-i* I can't get my body in order.

ألمّ ʔalamm↑ /vi/ **1** to happen (to s.o.). *ʔalammit bii muṣiiba* a disaster befell him. **2** to familiarize oneself. *ʔana ʔalammeet bil-mawḍuuʕ kull-u* I acquainted myself with the whole subject. - vn *ʔilmaam*; ava *mulimm*.

إلمام ʔilmaam↑ /n/ capability, adequate knowledge or ability. *ʕandu ʔilmaan bi-ʕuluum ik-kimya* he has a fair knowledge of the chemical sciences.

ملمّ *mulimm↑* /adj */ capable, having adequate knowledge or ability. *mulimm' bil-ʕiraaya wil-kitaaba* he can read and write.

ل م م ا

لمّا *lamma[2]* /conj/ **1** when. *ma-kunt'-ʃ b-aʕraf lamma tuxrug* I used not to know when she went out. *lamma laʕeet il-filuus inbasaṭt* when I found the money, I was happy. **2** until. *yaklu lamma yifbaʕu* they eat until they're full. *ma-baʕenaa-ʃ nifuf-ha lamma nsiina ʃakl-a-ha ʔeeh* we haven't seen her for so long we've

forgotten what she looks like. *ʕismaɛ lamma ʕaqul-lak* hang on till I tell you! **3** if, since. *lamma ʕintu mistaɛgiliin waqfiin kida leeh* if you are in a hurry, why are you standing around like that? **4** even if. *lamma ʕakuuṅ ḫ-amuut* even if I were to die. *miʃ ḫa-yaxd-u lamma ykuun ʕalmaaz* he wouldn't take it even if it were diamonds.

[1] ل م ن see ل م ا ن: *lumaan, lumangi*

[2] ل م ن see ل م و ن: *lamuun, lamuuna, lamuuni*

ل م ن ا -
ليموناتة *lamunaata* <It *limonata*> /n/ lemonade.
ليمونادة *lamunaada* = *lamunaata*.

ل م و ن
ليمون *lamuun* /coll n/ lemon(s); particularized as *lamuun baladi* Egyptian lemon(s) (Citrus limonum var. pusilla) and *lamuun ʕaḍalya* common lemon(s) (Citrus limonum var. vulgaris). *lamuun ḫilw* round bland variety of lemon,
ليمونة *lamuuna* /unit n, pl *-aat*/ a lemon. ‖*lamuuna f-balad qarfaana [prov]* ≈ just what's needed.
ليموني *lamuuni* /adj/ lime-green.

ل م ي ه
لاميه *lameeh* <Fr *lamé*> /n/ fabric with a glittering finish, *lama*, (loosely also) satin.

ل ن ت ي ب
لينوتيب *linutiib* <Fr> /n/ linotype. *makan linutiib* linotype machines. - also *linyu*.

ل ن ت و ت
لنتوت *lantuut* /n pl *lanatiit*/ peg on the beam of a plough, or of a *saqya*, for the attachment of harness (see Pl.D, 13). - also *ʕantuut, bantuut*.

ل ن ج
لنج *lang: gidiid lang* brand-new.

ل ن د ن
لندن *landan, lundun*↓ /prop n/ London.

ل ن ش
لنش *lanʃ* <Engl> /n pl *-aat/ [naut]* launch.

ل ن ش ن
لنشن *lanʃun* <Engl> /n/ (beef) luncheon meat, (beef) luncheon sausage.

ل ن ض see ل م ب: *lamḍa*

ل ن و ه
لينوه *linooh* <Fr *linon*> /n/ lawn. *qamiiṣ linooh* a lawn shirt.

ل ن ى
لنية *linya* <It *linea*> /n pl *-aat/* **1** one-eighth of an inch. *ʕazmiil linya* a chisel with a one-eighth inch bit. *musmaar linyiteen* a screw with a one-quarter inch thread. **2** electric power cable.

ل ن ى و
لنيو *linyu* <Fr *linotype*> /n/ linotype. *makan linyu* linotype machines. - also *linutiib*.

ل ه ب
لهب *lahabˆ* /coll n/ flame(s).
التهب *ʕiltahabˆ* /vi/ **1** to become ignited. **2** to become inflamed. - vn *ʕiltihaab*; ava *miltihib*.
التهاب *ʕiltihaab* /n pl *-aat/* inflammation, (loosely also) infection.
ملتهب *multahib* /adj/ flammable.

ل ه ت see ل ه و ت: *lahuut*

ل ه ث see ل ه س

[1] ل ه ج
لهج *lahag (i)* /vt/ to cause to rush, hustle. *malhuug ɛala ʕeeh* what is the rush? - vn *lahagaan*; ava *laahig*; pva *malhuug*.
لهجة *lahga*[1] /inst n, pl *-aat/* a rush, a hurry.
اتلهج *ʕitlahag* /vi/ to be rushed, be hurried. - iva *mitlihig*.

[2] ل ه ج
لهجة *lahga*[2] /n pl *-aat/* **1** dialect. **2** accent. **3** manner of speaking.

ل ه س
لهث *lahasˆ (a)* /vi/ to pant. - vn *lahs*; ava *laahis*.

ل ه ط
لهط *lahaṭ (a)* /vt/ **1** to guzzle (food). **2** to embezzle (money). - vn *lahṭ, lahaṭaan*; ava *laahiṭ*; pva *malhuuṭ*.
لهطة *lahṭa* /n pl *-aat/* large mouthful (of something soft, e.g., jelly, cream, etc.). *lahṭit ɛiʃta* a large mouthful of cream. *bittˈ zayy lahṭit il-ɛiʃta* a delicious girl.
اتلهط *ʕitlahaṭ* /vi/ **1** to be guzzled (of food). **2** to be embezzled (of money). - iva *mitlihiṭ*.

ل ه ف

لهف *lahaf (a)* /vt/ **1** to snatch, swipe. *lahaf il-bint' minni b-kilmiteen ɦilwiin* he stole the girl from me with a couple of sweet words. *law yifilt' ɛannu dqiiqa ɦa-yilhaf filuus-ak* if you take your eyes off him for a minute, he will pinch your money. **2** to hit, strike. *lahafit-u l-ɛarabiyya* the car struck him. *ʔil-mudarris lahaf-u qalameen* the teacher gave him a slapping. - vn *lahf*; ava *laahif*; pva *malhuuf*.

¶ *lahaf ɛala* to give cause to worry over, cause to be anxious about. *ʔinta dayman laahif ʔumm-ak ɛaleek kida leeh* why do you always have to make your mother anxious about you like that?

لهفة *lahfa* /n/ **1** worry, anxiety. *lahfit-ha ɛala-bn-a-ha* her anxiety over her son. ‖*ya lahfit nafs-i* ≈ alas! **2** yearning, desire.

ملهوف *malhuuf* /adj */ yearning, longing, excited.

اتلهف *ʔitlahaf* /vi/ **1** to be stolen, be swiped. **2** to be hit, be struck. - iva *mitlihif*.

اتلهّف *ʔitlahhaf* /vi/ to yearn, be eager. *b-atlahhaf ɛalee* I am longing to see him. - vn *talahhuf*↑; ava *mitlahhif*.

ل ه ل ب

لهلب *lahlib* /vt/ **1** to sear (of acid, dry heat and hot liquids). *ʔif-furba lahlibit-li buqq-i* the soup burnt my mouth. *ʔil-ɦaamiq bi-ylahlib il-gild* acid burns the skin. **2** to cause a burning sensation in. *ʔil-ɦumma lahlibit gism-i* the fever burned me up. ‖ *ʔil-bint' lahlibit-ni* the girl set my heart aflame. - *ʔasɛaar milahliba* horrendous prices. — /vi/ **3** to be seared. *gild-i lahlib mil-ɦaamiq* my skin was burnt by the acid. **4** to experience a burning sensation. *gism-u mlahlib mil-ɦumma* his body is burning with fever. - vn *lahlaba*; ava/pva *milahlib*.

ملهلب *milahlib* /adj */ active, dynamic, on-the-ball.

لهلوب *lahluub* /n pl *lahaliib*/ flame, tongue (of fire).

لهلوبه *lahluuba* /n pl *lahaliib*/ **1** flame. ‖*gayyiin waraana zayy il-lahluuba* coming up after us lickety-split. **2** active and dynamic person, ball of fire.

لهاليبو *lahaliibu* /n/ *[slang]* active and dynamic person, ball of fire.

اتلهلب *ʔitlahlib* /vi/ **1** to be seared. **2** to experience a burning sensation. *baṭn-i b-itlahlib* I get a burning feeling in my stomach. - iva *mitlahlib*.

ل ه ل ه

لهله *lahlah* /vt/ to cause to pant, rush and flurry. - vn *lahlaha*; ava *milahlah*.

اتلهله *ʔitlahlah* /vi/ to be made to pant, be rushed and flurried. *ʔinta gayy' mitlahlah ɛala ʔeeh* what are you rushing here in such a state for? - iva *mitlahlah*.

ل ه م

لهم *laham*↓ *(i)* /vt/ to inspire. *rabb-i-na laham-ni ʔaagi n-nahar-da* God made me come today. - vn *lahamaan*; ava *laahim*.

ألهم *ʔalham* (also *ʔanham*↓) /vt/ to inspire (s.o.) with (s.th.). *ʔalham-u rabb-i-na ṣ-ṣabr* God inspired him with patience. - vn *ʔilhaam*; ava *mulhim*; pva *mulham*.

إلهام *ʔilhaam*↑ /n/ inspiration.

استلهم *ʔistalham*↑ /vi/ to draw inspiration for. *ʔistalham il-qiṣṣa min sira faɛbiyya* he drew the inspiration for the story from a folk epic. - vn *ʔistilhaam*; ava *mustalhim*.

ل ه و see ل ه ى : *lahw, lahwa*

ل ه و ت

لاهوت *lahuut* /n/ *[Chr]* **1** divinity. *lahuut il-masiiɦ wi-nasuut-u* the divinity and humanity of Christ. **2** theology. *kulliyyit lahuut* theological college.

لاهوتى *lahuuti [Chr]* **1** /adj/ theological. **2** /n */ theologian.

ل ه و ج

لهوج *lahwig* /vt/ to rush, hurry. *lahwig-ni xallaa-ni ʔabawwaz if-fuṣl* he rushed me and made me mess up the work. - vn *lahwaga*; ava/pva *milahwig*.

اتلهوج *ʔitlahwig* /vi/ to be hurried, be rushed. - iva *mitlahwig*.

ل ه ى

لهى *laha (i)* /vt/ **1** to distract. *ʔilhi l-kalb' b-ɛaqma [prov]* distract the dog with a bone (and it won't bite you). **2** to afflict (in contexts of cursing or abusing). *yilhii-k ɛala ɛeen-ak ya bɛud* may you be afflicted with the loss of your sight! *ʔeeh illi lahaa-k xallaa-k ʔiddet-huu-lu* why the hell have you given it to him? - vn *lahayaan, lahw*; ava *laahi*; pva *malhi*.

لهو *lahw* /n/ distraction (caused by anguish or bewilderment). *ya lahw-i* conventional exclamation of dismay or distress. *ya lahw-i ɛaleek ya-xuu-ya [women in trad soc]* what a disaster it is to lose you! (exclamation of mourning).

لهوه *lahwa = lahw*.

ملهى *malha* /n pl *malaahi*/ night-club. ‖*(madiinit) il-malaahi* fun-fair, amusement park.

ملهيّه *milahiyya* /n/ distraction.

اتلهى *ʔitlaha* /vi/ **1** to be or become distracted *ʔitlaha f-kitaab* he became absorbed in a book. **2** to be afflicted (in contexts of cursing or abusing). *ʔitlihi ʔiṭlaɛ min*

hina get the hell out of here! *ʕitlihi* get lost! stop being a nuisance! shut up! - ava/iva *mitlihi*.

ل و see also ا ل و ل and ا ل و م

لو *law* /conj/ **1** /usu introducing hypothetical condition/ if. *huwwa law kaan hina kaan qatal-ak* if he had been here, he would have killed you. *law kaan ʕaxuu-ya hina kaan ḥa-yiddii-lak* if my brother were here, he would give (it) to you. *law tiigi bukra ḥ-addii-lak il-filuus* if you come tomorrow, I'll give you the money. ‖*ʃagarit law ma-b-tiṛaḥ-ʃi [prov]* the 'if' tree doesn't bear fruit. **2** even if. *ʕana law miwaafiq ɛala kida miʃ ḥ-awaafiq ɛala kull' kalaam-ak* even if I agree to that, I shan't agree to all you say.

¶ *wa-law* /conj/ **1** (also *wa-law ʕinn*) even though, even if. *b-aḥibb-ak wa-law ʕinni zaɛlaana minnak* I love you, even though I am angry with you. *xud il-ʕaṣiila wa-law kaanit ɛal-ḥaṣiira [prov]* marry a well-born woman even if she be poor. **2** even as much as, even as little as. *ʕaqdar ʕagiib wa-law miit kiilu kabaab* I can bring as much as one hundred kilos of kebab. *xallii-na nfuuf-ak wa-law marra fis-sana* let us see you, even if it's only once a year. — /interj/ **3** so what! even so! *ʕana ruḥt-i-lu mbaariḥ. - wa-law - laazim tiruḥ-lu bukra barḍu* 'I went to see him yesterday.' 'So what! You still have to go and see him again tomorrow.'

ل و ا ن

لوان *liwaan* (also *ʕiwaan*ˀ) <P *aiwân*> /n pl *-aat/ [obsol]* **1** raised floor on either side of a *durqaaɛa*, estrade. **2** small recess with a raised floor off the main room of a public bath.

لوانجي *liwangi* /n pl *-yya/ [obsol]* male upper servant.

لوانجيّة *liwangiyya* /n pl *-aat/ [obsol]* female upper servant.

ل و ء see ² ل و ى

ل و ب

لوب *luub* <Fr *loupe*> /n pl *-aat/* magnifying glass.

ا ل و ب ى see ² ل ب ى : *lubya*

ل و ت

لوت *luut* /n/ Mediterranean and Red Sea fish of the species Sciae.

ل و ث see ل و س

ل و ج

لوج *loog, looj* <Fr *loge*> /n pl *ʕalwaag, ʕalwaaj/* theatre or cinema box.

ل و ح ¹

لوح *lawaḥ (i)* /vt/ to twist, bend (out of shape). *lawaḥt-i rigl-i* I twisted my ankle. ‖*lawaḥ-ni b-ɛaṣaaya* he beat me out of shape with a stick, he gave me a real whacking. - *bint' tilwiḥ* ≈ a stunning girl. - vn *lawaḥaan, lawaḥ*; ava *laawiḥ*; pva *malwuuḥ*.

لوحة *lawḥa* /inst n, pl *-aat/* a twist, a bend.

اتلوح *ʕitlawaḥ* /vi/ to be or become twisted or bent (out of shape). *rigl-u tlawaḥit* his leg got twisted. - ava/iva *mitliwiḥ*.

لوّح *lawwaḥ*ˈ /vi/ **1**↑ to wave (with the hand). **2** *[path]* to suffer spasms. - vn *talwiiḥ*; ava *milawwaḥ*.

تلويحة *talwiiḥa* /inst n, pl *-aat, talawiiḥ/ [path]* a spasm.

ل و ح ²

لوح *looḥ* /n pl *ʕalwaaḥ/* **1a** plank, board. *looḥ bunṭi* scaffolding plank. **1b** baker's wooden tray. **1c** winnowing shovel. **2** sheet, plate (of metal, glass etc.). *looḥ (ʕirdiwaaz)* schoolroom slate. ‖*looḥ talg* block of ice. **3** shoulder blade, scapula. *beet il-looḥ* shoulder (of meat). **4** oaf. *xud maɛaak il-looḥ is-sawwaaq ig-gidiid da* take that dimwit of a new driver with you.

لوحة *looḥa* /n pl *-aat, liwaḥ/* **1** board (including, e.g., notice-board, sign-board, drafting board, panel). **2** plate (including, e.g., name-plate, number-plate, licence-plate). **3** painting, drawing, design draft, sketch. **4** *[print]* frame of type. **5** chart.

لوّح *lawwaḥ*² /vt/ to fit with (wooden) planking or (metal) plating. - vn *talwiiḥ*; ava/pva *milawwaḥ*.

اتلوّح *ʕitlawwaḥ* /vi/ to be fitted with (wooden) planking or (metal) plating. - iva *mitlawwaḥ*.

استلوح *ʕistalwaḥ* /vi/ **1** to act like a dullard. *waaqif mistalwaḥ leeh* why are you standing around like a blockhead? **2** to consider, or take for, a dullard. - vn *ʕistilwaaḥ*; ava *mistalwaḥ*.

ل و د ¹

لاد *laad (u)* /vi/ to suffer. *ʕil-waaḥid laayid min ig-guuɛ* I am starving. - vn *looda, lawadaan, layadaan*; ava *laayid*.

لايد *laayid* /adj */ low, loutish, sluttish. *ʕibn il-layda* son of a bitch.

لوّد *lawwid*ˈ /vt/ to subject to protracted discomfort. *xad-ni yxaddii-ni lawwid-ni mig-guuɛ* he took me to

have lunch and kept me waiting till I was starving. *ʔil-ḥubb' lawwid ʠalb-u* love set his heart aflame. - vn *talwiid*; ava *milawwid*.

اتلوّد *ʔitlawwid* /vi/ to be subjected to protracted discomfort. - iva *mitlawwid*.

ل و د ²

لوّد *lawwid²: la tḥawwid wala tlawwid* it goes straight to the target.

ل و ذ see ² ل و ز

ل و ر و

لاورو *lawru* (also *waraʠ lawru*) <It *lauro*> /coll n/ bay leaves.

ل و ر ى

لورى *luuri* <Engl> /n pl *lawaari, luriyyaat*/ **1** lorry, truck. **2** hand-operated truck used by railway labourers.

ل و ز ¹

لوز *looz* /coll n/ **1** almond(s). ‖*looz ya tirmis looz [vendor's cry]* delicious lupins as sweet as almonds! **2** cotton boll(s). — /adj invar/ **3** delicious. *bint' looz ʠawi* a really delectable girl.

لوزة *looza* /unit n, pl *-aat*/ **1** an almond. ‖*looza salt* motif in tent appliqué design (see Pl.H, 9). **2** a cotton boll. — /n pl *liwaz*/ **3** tonsil. *ʕandu l-liwaz* he has tonsillitis. **4** leather reinforcing patch put on a slipper of the *bulʏa* type at the point where the leather heel and sole strips meet. **5** kind of spot weld.

لوّز *lawwiz* **1** /vt/ to put a *looza* on (a slipper of the *bulʏa* type). **2** /vi/ to form bolls (of cotton). - vn *talwiiz*; ava *milawwiz*.

اتلوّز *ʔitlawwiz* /vi/ to be reinforced with a *looza* (of a slipper of the *bulʏa* type). - iva *mitlawwiz*.

ل و ز ²

لاذ *laaz (u)* /vi/ to take refuge. *ʔin-naas illi bi-tluuz luhum dool mif ḫa-yinfaʕuu-k* those people you're relying on will let you down. *ʔana laayiz bi-ganaab illaah* I am taking refuge in God. - vn *lawaʐaan*; ava *laayiz*.

ل و س

لوّس *lawwis↑* /vt/ to pollute, contaminate. - vn *talwiis*; ava/pva *milawwis*.

اتلوّس *ʔitlawwis↑* /vi/ to be polluted, be contaminated. - vn *talawwus*; iva *mitlawwis*.

ل و ش

لاش *laaʃ (u)* /vt/ **1** to gobble up, devour completely. *ʔid-diib laaʃ il-xaruuf* the wolf gobbled up the sheep. **2** to embezzle (money). **3** to deal (a hard blow or the like) to. *laʃ-ni ʠalam* he slapped me hard. *laʃ-ni kurbaag* he gave me a whipping. **4** to sting (of a scorpion, snake etc.). - vn *lawaʃaan*; ava *laayiʃ*.

لوّاشة *lawwaaʃa* /n pl *-aat*/ twitch (for restraining an animal).

اتلاش *ʔitlaaʃ* /vi/ **1** to be gobbled up. **2** to be embezzled. **3** to be dealt (e.g., a blow). **4** to be stung. - iva *mitlaaʃ*.

لوّش *lawwiʃ* **1** /vt/ *[agric]* to tie (a crop) into sheaves or bundles. **2** /vi/ to grope about (in the dark, in the manner of a blind person, etc.). - vn *talwiiʃ*; ava/pva *milawwiʃ*.

تلويشة *talwiiʃa* /n pl *-aat, talawiiʃ*/ a sheaf, a bundle (of a crop, especially sugar cane).

اتلوّش *ʔitlawwiʃ* /vi/ to be tied into bundles or sheaves. - iva *mitlawwiʃ*.

ل و ص

لاص *laaṣ (u)* /vi/ to be at a loss, be in a muddle. *laaṣ fil-imtiḫaan* he was at a loss in the exam. - vn *lawaṣaan, layaṣaan*; ava *laayiṣ*.

لوصة *looṣa* /n pl *-aat*/ state of bewilderment, fix.

لاوص *laawiṣ* /vi/ to dither, vacillate. prevaricate. *ʠaʕad yilaawiṣ wi-ma-rḍii-ʃ yiʕtirif bil-ḫaʠʠ* he kept shilly-shallying and wouldn't tell the truth. - vn *milawṣa*; ava *milaawiṣ*.

اتلاوص *ʔitlaawiṣ = laawiṣ*. - ava *mitlaawiṣ*.

ل و ط ¹

لاط *laaṭ' (u)* /vi/ to loaf around, hang about. *ʈuul in-nahaar laayiṭ barra* he hangs around out (in the streets) all day long. - vn *lawaṭaan*; ava *laayiṭ*.

لوّاطة *lawwaaṭa* /n pl *-aat*/ (animal-drawn) beam used for levelling tillage under water.

لوّط *lawwaṭ* /vt/ to level or smooth (land which is under water) with a *lawwaaṭa*. - vn *talwiiṭ*; ava/pva *milawwaṭ*.

اتلوّط *ʔitlawwaṭ* /vi/ passive of *lawwaṭ*. - iva *mitlawwaṭ*.

ل و ط ²

لاط *laaṭ² (u)* /vi/ to have sexual relations with another male (of a male). - vn *lawaṭaan*; ava *laayiṭ*.

لوطى *luuṭi* /n pl *-yya*/ active homosexual.

ل و ع

لوعة *looʕa, lawʕa* /n/ (mental) agony. *ḫa-tiktim*

loɛit-ha guwwa ɋalb-a-ha she will conceal her agony in her heart.

لوع *lawaɛ* /n/ deviousness. *da malyaan lawaɛ* he is all deviousness.

لوّع *lawwaɛ* /vt/ **1** to subject to subtle (and usually protracted) torment. *ʔil-ɦubb[i] lawwaɛ-ni* love made me suffer agonies. *ʔil-muwaẓẓaf lawwaɛ-na kull[i] yoom bi-yɋuul bukra* the employee kept us on tenterhooks, saying 'Tomorrow' every day. **2** to make devious or tortuous. *ma-tlawwaɛ-ʃ[i] kalaam-ak* don't mince your words! — /vi/ **3** to act in a devious or tortuous way. - vn *talwiiɛ*; ava/pva *milawwaɛ*.

ملوّع *milawwaɛ* /adj */ artful, worldly-wise.

اتلوّع *ʔitlawwaɛ* /vi/ **1** to be subjected to subtle (and usually protracted) torment. **2** to act or be made to act in a devious manner. - iva *mitlawwaɛ*.

لاوع *laawiɛ* /vt/ to string (s.o.) along, bamboozle. *ʔis-simsaar lawiɛ-ni l-ɦadd[i] ma xassar-ni ʔalf[i] gneeh* the agent led me on and lost me a thousand pounds. - vn *milawɛa*; ava *milaawiɛ*.

اتلاوع *ʔitlaawiɛ* /vi/ to act deviously. *ʔit-taagir itlaawiɛ ɛaleehum fit-taman* the trader swindled them over the price. *ma-titlawiɛ-lii-ʃ* don't play games with me! - ava *mitlaawiɛ*.

ل و ف [1]

see also ل ف ء [1] and و ل ف [1]

لاف *laaf (u)* /vi/ to become friendly or intimate. *ʔil-walad da laayif ɛala* (or *bi-*) *ʔaṣɦaab mif kuwayyisiin* that boy is associating with unpleasant companions. *ʔil-bint[i] diyya bi-tluuf ɛala* (or *bi-*) *ʔayy[i] waaɦid* this girl takes up with anyone. - vn *loof, lawafaan*; ava *laayif*.

اتلاف *ʔitlaaf* /vi/ (impersonal) passive of *laaf*. *dool naas yitlaaf ɛaleehum* are these people of the type (one) comes to feel at home with? - iva *mitlaaf*.

لوّف *lawwif* **1** /vt/ to cause to feel friendly or intimate. *ʔil-bint[i] di lawwifit-u ɛaleeha min yoom waaɦid* this girl managed to hook him in one day. **2** /vi/ to become friendly or intimate. - vn *talwiif*; ava/pva *milawwif*.

اتلوّف *ʔitlawwif* /vi/ passive of *lawwif* 1. - iva *mitlawwif*.

ل و ف [2]

لوف *luuf* /coll n/ loofah plant, dish-cloth gourd (Luffa aegyptica, the fibre of which is commonly used as a scouring pad). ‖ *luuf ʔaɦmar* palm fibre.

لوفة *luufa* /pl *-aat*/ unit noun of *luuf*.

ل و ق [1]

لوق *lawaɋ* /n/ pronouncing of *r* as *y* (a speech defect).

ألوق *ʔalwaɋ* /adj, fem *looɋa*, pl *luuɋ*/ having the speech defect called *lawaɋ*.

ل و ق [2]

لوق *luuɋ, looɋ: baab il-luuɋ, baab il-looɋ* /prop n/ district of central Cairo.

ل و ك

لاك *laak (u)* /vi/ to speak critically, bring accusations. *bi-yluuku f-sumɛit-ha* they are tearing her reputation to shreds. - ava *laayik*.

لوّك *lawwak* /vi/ to chew at. *ɛammaal yilawwak il-ʔakl[i] f-buɋɋ-u* he keeps chewing the food around in his mouth. - vn *talwiik*; ava/pva *milawwak*.

اتلوّك *ʔitlawwik* /vi/ **1** to be chewed at. **2** to chew away (at s.th.). - ava/iva *mitlawwik*.

ل و ل

see ل و ل ى: *luuli, luliyya*

ل و ل ا

see also ل و and ل و م ا

لولا *loola* (also *lolaa-ʃ*) /conj, w foll pron suff *lolaa-*/ but for, were it not for. *lolaay kaan ɋatal-ak* but for me, he would have killed you. *loola musaɛdit ʔaxuu-ya kaan ɛaɋl-i ṭaar* but for the help of my brother, I should have gone crazy. *lolaa-ʃ ik-kalb[i] hina ma-kunt[i]-ʃ ɛirift inn il-ɦaraami fil-beet* had the dog not been here I wouldn't have known the thief was in the house. - also *looma*.

¶ *loola ʔinn* but for the fact that, were it not for the fact that. *loola ʔinnu ɛiyi kaan maɛaana dilwaɋti* if he hadn't fallen ill, he'd be with us now.

ل و ل ب

لولب *lawlab* /n pl *lawaalib*/ **1** spring, coil. *lawlab baakim* valve spring. **2** coil (intra-uterine device).

لولبى *lawlabi* /adj */ **1** spiral, helical. ‖ *raɋɋaaṣa lawlabiyya* undulating dancer. **2** devious.

ل و ل و

لولو *lawliw* /vt/ to twist, coil. ‖ *ʔil-mayya s-saɋɛa lawliwit maṣariin-i* cold water gave me cramps in the stomach. - vn *lawlawa*; ava/pva *milawliw*.

اتلولو *ʔitlawliw, ʔitlawlaw* /vi/ **1** to slip away, wriggle away. **2** to become twisted. *ɦabl it-tilifoon ʔitlawlaw* the telephone cord has become twisted. - ava *mitlawliw*.

ل و ل ى

see also ل ل ى [1]

لولى *luuli* /coll n/ **1** pearl(s). **2** *[fig]* gleaming teeth.

لولّية *luliyya* **1** /unit n, pl *-aat*/ a pearl. **2** /n pl *lawaali*/ copper mounting for the reed of the *muzmaar*.

ل و م

لام *laam*[2] *(u)* /vt/ to blame, reproach. *miraat-u bi-tluum-u ɛala maṣariif-u l-kitiira* his wife blames him for his heavy spending. - vn *loom, malaam, malaama, lawamaan*; ava *laayim*; pva *maluum*↑.

ملامه *malaama* /n/ blame, reproach. ‖*loola l-malaama* ... were it not reprehensible ..., as in *loola l-malaama kunt' ḍarabt-u ɣalam* but for the shame of doing it, I would have slapped him.

اتلام *ʔitlaam* /vi/ to be blamed. - iva *mitlaam*.

ل و م ا see also ل و and ل و ل ا

لوما *looma* (also *lomaa-f*) /conj, w foll pron suff *lomaa-*/ but for, were it not for. *lomaa ɛaleehum ma-kanuu-f liqyu yaklu* but for his helping them they wouldn't have had anything to eat. - also *loola*.

ل و م ا ن see ل م ا ن: *lumaan*

ل و ن[1]

لون *loon* /n pl *ʔalwaan*/ **1** colour. *loon-u ʔazraq* it's blue. **2** colouring matter. *ʔalwaan mayya* water colours. *ʔalwaan ʃamɛ* wax crayons. *ʔalwaan zeet* (artist's) oil paints. **3** style, type. *fii ʔaʃkaal wi-ʔalwaan* there are all sorts and types. *kull' muɣanni lu loon* every singer has his own style

لون *liwin* /adj */ outgoing and (perhaps a little too) approachable (usually of a woman).

لوّن *lawwin* **1** /vt/ to colour. *ʔin-naqqaaʃ lawwin il-ħeṭaan ʔaħmar* the decorator coloured the walls red. – /vi/ **2** to begin to wear coloured clothes (of women, after wearing black during a period of mourning). **3** to ripen (of fruit). - vn *talwin*; ava/pva *milawwin*.

ملوّن *milawwin* /adj/ multi-coloured. *ɣamiiṣ milawwin* a coloured (as opposed to a single colour) shirt.

ملوّن *mulawwan* /adj */ coloured, non-white.

اتلوّن *ʔitlawwin* /vi/ to be coloured.. *ʔil-ɣumaʃaat bi-ttlawwin bis-sabɣa* fabrics are coloured by dye. ‖ *ʔil-manikaan ttlawwin ħasab il-fustaan* the model takes on the characteristics of the dress. - iva *mitlawwin*.

متلوّن *mutalawwin* /adj */ time-serving, opportunist.

ل و ن[2] see ل و ا ن: *liwaan, liwangi, iiwangiyya*

ل و ن د

لونده *lawinda* <It *lavanda*> /n/ lavender. *mayyit lawinda* lavender water.

ل و ن د ی

لوندی *lawindi* /n/ highfalutin talk. -/adverbially/ *bi-yikkallim lawindi* he talks like a toff.

ل و ی[1]

لوى *lawa (i)* /vt/ **1** to bend. *huwwa raagil ɛitra yiɛraf yilwi l-ħadiid bi-ʔiid-u* he's a strong man, able to bend iron (bars) with his bare hands. **2** to twist. ‖*lawa buuz-(u)* or *lawa wiff-(u)* to scowl. – /vi/ **3** to writhe. *baṭn-u b-tiwgaɛ-u b-yilwi biiha* his stomach hurts and he is writhing with it. - vn *lawy, layy*; ava *laawi*; pva *malwi*.

لىّ *layy'* /vn/ ‖*ṭayy' ɛala layy* on an empty stomach, as in *baat ṭayy' ɛala layy* he went to bed supperless.

لوية *lawya* /inst n, pl *-aat*/ a bend, a twist, a writhe.

لىّ *layy*[2] /n pl *-aat*/ flexible hose (of a water-pipe, see Pl.J, 4).

لويّة *lawiyya* /n/ convolvulus.

ملاوى *malaawi* /pl n/ *[rur]* pegs (of a rebab).

التواءة *ʔiltiwaaʔa*↑ **1** /n pl *-aat*/ twist or bending (of the body). **2** *ʔil-ʔiltiwaʔaat* /pl n/ *[path]* nitrogen narcosis, the bends.

اتلوى *ʔitlawa* /vi/ **1** to be bent. **2** to be twisted. - iva *mitliwi*.

اتلوّى *ʔitlawwa* /vi/ to writhe, squirm. *ɣaɛad yitlawwa min il-wagaɛ* he kept writhing with pain. - ava *mitlawwi*.

ل و ی[2]

لوا، لواء *liwa* /n/ *[mil]* **1** /pl *liwaʔaat, ʔalwiya*↑/ brigade. **2** /pl *liwaʔaat*/ **2a** major-general or brigadier-general. **2b** *liwa baħri* rear-admiral.

ل ی ا ق

ليامه *liyaaqa'* <T *yaka*> /n pl *-aat*/ collar (of a garment). *nuṣṣ' lyaaqa* mandarin collar, half collar. - also *yaaqa*.

ل ی ب see ل ب ی ا: *liibi*

ل ی ج

لايج *laayig* /adj */ restless. *laqeet-u laayig fil-beet* I found him pacing about the house. *ɛeneen layga* shifty eyes.

ل ی ح

لاح *laaḥ (i)* /vi/ to appear from a distance. *lamma l-fagr' laaḥ* when dawn broke. - vn *layaḥaan*; ava *laayiḥ*.

لائحة *layḥa*↑ /n pl *lawaayiḥ*/ set of regulations. *layḥit il-bariid* the post office regulations. *ɛuquuba ħasab il-lawaayiḥ* a penalty according to the regulations.

ل ى د see ل و د : *laayid*

ل ِى د و
ليدو *liidu* /n/ ludo (game).

ل ى س [1]
لَيِّس *layyis* /vt/ **1** to stop up or seal up (with mud). **2** *[slang]* to shut (s.o.'s mouth). *layyis-lu buqq-u* shut his trap for him! - vn *talyiis*; ava/pva *milayyis*.
اتليّس *ʔitlayyis* /vi/ **1** to be stopped up or sealed up (with mud). **2** *[slang]* to shut up or be made to shut up. *ʔitlayyis* shut your gob! - ava/iva *mitlayyis*.
متليّس *mitlayyis* /adj */ stupefied with hashish.

ل ى س [2]
ليس *laysa laysa ʔilla* and no more, and that's that, as in *gineeh laysa ʔilla* one pound and not a penny more, *huwwa kiilu laysa ʔilla* it's a kilo (you'll be getting) and that's all.

ل ى ص ا
ليصا *liiṣa* /interj/ *hubb' liiṣa* heave-ho!

ل ِى ط
ليطه *ʾleeṭa* /n/ mire.
لَيِّط *layyaṭ* /vt/ to smear with. *layyaṭu l-ħeeṭa ṭiin* they daubed the wall with mud. *layyaṭt' ħduum-i buuya* I got my clothes smeared with paint. - vn *talyiiṭ*; ava/pva *milayyaṭ*.
اتليّط *ʔitlayyaṭ* /vi/ to be smeared. - iva *mitlayyaṭ*.

ل ى ف
ليف *liif* /coll n, pl *ʔalyaaf*/ fibre(s), palm fibre(s).
ليفة *liifa* /n pl *-aat*/ **1** tuft of palm fibres used as a brush. **2** bath sponge, loofah.
ليفى *liifi* /adj/ fibrous.
لَيِّف *layyif* **1** /vt/ to scrub with a *liifa* or a *luufa*. **2** /vi/ **2a** *[path]* to become cirrhotic. **2b** to become fibrous. - vn *talyiif*; ava/pva *milayyif*.
اتليّف *ʔitlayyif* /vi/ **1** to scrub oneself with a *liifa*. **2** to be scrubbed with a *liifa*. **3a** *[path]* to become cirrhotic. **3b** to become fibrous. - ava/iva *mitlayyif*.
تليّف *talayyuf* /n/ *[path]* cirrhosis.

ل ى ق [1]
لاق *laaq (i)* /vi/ to be suitable, be fitting, be apt. *bi-yliiq ɛaleek il-loon il-bunni* brown suits you. *taṣarrufaat mif layqa* improper behaviour. *yiliq-lu ʔinnu yiɛmil kida* it's only right and fitting that he should behave that way. *da ma-yliq-ʃ' minnak* you shouldn't do that kind of thing. - vn *layaqàan*; ava *laayiq*.
لياقة *liyaaqa* [2], *liyaaqa* /n/ **1** suitability, appropriateness. *ʃaabb" ɛandu lyaaqa qawi* a most eligible young man. **2** fitness. *tamariin liyaaqa badaniyya* physical fitness exercises.

ل ى ق [2]
ليقة *liiqa* /n pl *liyaq*/ pad of silk or cotton fibre placed in an inkwell to absorb and hold ink.

ل ى ق [3] see ل ى ا ق : *liyaaqa* [1]

ل ى ل
ليل *leel* /n/ night-time. *ʔid-dinya baqit leel* night came. *ṭuul il-leel* all night long. *tisɛa w-nuṣṣ' bil-leel* nine-thirty at night. *ʔimbaariħ bil-leel* last night. || *ʔibn' leel* burglar. - *ʔil-leel bi-ʔaxr-u [prov]* ≈ one can't tell how things will turn out till the end. *-ya leel ya ɛeen ya leel* traditional opening formula of a *mawwaal*. – /adjectivally/ *ʔiswid leel* pitch black.
ليله *leela* /n pl *layaali, lelaat*/ **1** evening, night. *lelt-ak saɛiida* good evening. *leelit ʔimbaariħ* last night. *ʔil-lelaa-di* tonight, this evening. *leelit il-xamiis (il-gumɛa* etc.) Wednesday (Thursday etc.) night. *fi-leela mil-layaali* one night. || *ya leela beeḍa* exclamation of joy. *- layaali ħamra* nights of sensual pleasure, orgiastic nights. *- leelit il-ɛiid* the eve of the feast. *- ʔil-leela k-kibiira* the last and climactic night of a *muulid*. **2** a gathering extending into the nocturnal hours, often with food and music and culminating in a *zikr*, open to the neighbourhood, and usually sponsored as a gesture of thanks to God for a specific deliverance (e.g., recovery from illness) or to gain religious merit. – *layaali* /pl n/ **3** opening section of a *mawwaal* improvised by the singer on the traditional formula *ya leel ya ɛeen ya leel*. ¶ *leelit ma* /conj/ (on) the night when. *leelit ma tqabilna* (on) the night we met.
ليلى *layli* /adj invar/ nocturnal. *ṭayaraan layli* a night flight.
ليلاتى *lelaati* /adv/ nightly, every night.
لَيِّل *layyilit* /vi/ to turn to night. (*ʔid-dinya*) *layyilit ɛaleena* night overtook us. - ava *milayyila*.

ل ى م [1]
ليم *liim* /n/ pitch line (in marbles).

ل ى م [2] see [2] ل ء م : *laayim, ʔitlaayim*

ل ى ن

لان *laan (i)* /vi/ to become pliable, supple, flexible, soft or yielding. *bi-yraṭṭabu l-kittaan ɛaʃaan yiliin* they moisten the flax to make it pliant. *liin il-ɛaḍm* softening of the bones. *ɋulub-hum laanit* their hearts softened. ‖ *ʃis-sitt' lanit-lu* the woman yielded to his advances. - vn *liin, layanaan*; ava *laayin*.

لين *liin* /n/ **1** softness, yieldingness, gentleness. *ʃitɛaamil maɛaahum· bil-liin* treat them gently. **2** looseness of the bowels, mild diarrhoea.

ليّن *layyin*[1] /adj */ pliable, flexible, soft, yielding. *kursi layyin* a soft chair. *raagil layyin* (1) an easy-going man, a flexible man. (2) a spineless man. ‖ *sitt' layyina* a woman of easy virtue.

ليونة *liyuuna* or *luyuuna* /n/ pliancy, flexibility, softness, yieldingness. *ʃir-ruṣaaṣ fii liyuuna* lead is pliable.

ليّن *layyin*[2] /vt/ **1** to make pliable, supple or flexible, soften, cause to yield. *ʃil-mayya layyinit il-xaʃab* the water softened the wood. ‖ *layyin raas-* (or *dimaaɣ-*) to wear down the resistance of, persuade, as *ɋaɛadit tilayyin dimaaɣ-i bil-filuus marra w-bit-tahdiid marra* she kept on at me to change my mind, now offering money, now threatening. **2** to run in, break in (a car). - ava/pva *milayyin*.

مليّن *mulayyin* /n pl *-aat*/ laxative.

اتليّن *ʃitlayyin* /vi/ **1** to be made pliable, supple, flexible, soft or yielding. **2** to be run in, be broken in (of a car). - iva *mitlayyin*.

تليّن *talayyun*ˀ /n/ suppleness.

استلين *ʃistalyin* /vi/ **1** to consider (too) soft. **2** to select for softness. ‖ *ʃistalyinu ʃaxuu-hum wi-xadu kull' fluus-u* they realized that their brother was easy to fool so they took him for all his money. - ava *mistalyin*.

ل ى ه

ليه *leeh* **1** /interrog adv/ why? *leeh il-badla di* why this suit? *ʃinta waaɋif kida leeh* why are you standing like that? *saʃal-ni ma-zurtu-huu-ʃ leeh* he asked me why you didn't visit him. **2** /conj/ why. *ɛirift' leeh zar-ni* I found out why he visited me.

ل ى ى[1]

ليّة *liyya* /n/ **1** /pl *-aat*/ tail of a sheep. **2** /no pl/ fat from the tail of a sheep.

ل ى ى[2] see ل و ى[1]: *layy*

م

م

م *mi-* contracted form of *min* (q.v.).

ا م

ما *ma*[1] particle occurring with certain prepositions and nouns to form phrasal conjunctions, as either a continuous or discontinuous unit. *baɛd*[i] *ma s-sibaaq ibtada* or *baɛd is-sibaaq ma btada* after the race began. - for phrasal conjunctions with *ma*, see under the respective preposition or noun; fused classical conjunctions (e.g., *mimma, lamma*) look up as headwords.

ما *ma-* **1** particle lending emphasis to a suggestion or invitation. *ma-tuqɛud* come on, sit down! do sit down! *ma-balaaʃ* come on, forget it! *ma-yismaɛ* so what if he hears! let him hear! **2a** /when occurring w a foll n or pron (or pron suff in the case of 3rd pers *ma-hu, ma-hi* and *ma-hum*)/ particle signalling expostulation. *ma-ɧna ɛarfiin kida* but we know that already! *ma-l-mafruuq ʕinnak tistanna* but you're supposed to wait! *ma-l-ɛiyaal ʕaɧbaab allaah* after all, children are God's loved ones. *ma-hu* (or *ma-huwwa*) *qaal kida* but that's what he said! **2b** /when occurring w foll 3rd pers pron or pron suff plus a n or pron (in the case of a foll 3rd pers pron, *ma-hu* only)/ particle signalling emphasis of expostulation. *ma-hu* (or *ma-huwwa*) *ʕiɧna ɛarfiin kida* but we know that very well already! *ma-hu* (or *ma-huwwa*) *l-mafruuq ʕinnak tistanna* but the point is that you're supposed to wait! *ma-hu* (or *ma-huwwa* or *ma-hi* or *ma-hiyya*) *l-ɛiyaal ʕaɧbaab allaah* after all, the fact is that children are God's loved ones. *ma-hu huwwa qaal kida* but that's really what he said! **3** /as a part of the discontinuous unit *ma-...-ʃ*/ negating particle. *ma-titkallim-ʃ* don't speak! *ma-ɛamalt*[a]*-haa-ʃ* I didn't do it. *ma-nii-ʃ kaddaab* I am not a liar. *siriir ma-ɛalehuu-ʃ martaba* a bed with no mattress on it. *ma-fii-ʃ* (1) there is not (any), there are not (any). (2) nothing, nought, as in *ɧilt-u ma-fii-ʃ* he has nothing to his name. (3) nought, none, blank (in such games as dominoes). - /occasionally, after an oath in a colloquial context, or in classicisms, without the second constituent/ *w-allaahi ma-na raakib* by God, I will not get on! *ma-yiqdar ɛal-qudra ʕilla rabb-i-na* only God is master of fate.

ما *maa, ma*[2] **1** /interrog pron/ what? *maa raʕy-ak baqa f-ʕinn*[i] *ʕana lissa ʃayf-u* so what do you say to the fact that I've just seen him? ‖*maa l-* (1) what's wrong with ...? what's the matter with ...? as in *maa lak* what's the matter with you? *maa l-rigl-ak* what's the matter with your leg? *maa lak bi-tqul-ha kida* now what makes you say it like that? (2) what has it to do with ...? *ʕana maa li* what business is it of mine? - *wi-maa lu* (1) so what? (2) that's O.K., that's fine. - *maa l-... wi-maa l-...* what has ... to do with ..., as in *maa lak wi-maa lil-walad* what concern of yours is the boy? (i.e. why don't you stop interfering with the boy?). *maa li ʕana w-maa lil-bint* (1) what have I got to do with the girl? (2) I have no longer any wish to be involved with the girl, I wash my hands of the girl. **2**↑ /rel pron/ that which. *maɛaak ma yisbit ʕinnak ɛuḍw* do you have anything to prove you're a member? **3**↑ /pron used in apposition to an indefinite n/ certain, particular. *ʕila ɧaddin maa* to a certain extent. *fi-makaanin maa* in a certain place. **4** /w foll el form as v/ particle indicating surprise or wonder. *ʕil-ɧubb*[i] *maa ʕaɧlaa* love is wonderful. *maa ʕarzal-ak* how cheeky you are!

¶ *maa ɛada* /prep/ except.

ا ء م see also ي ى م

ماء *maaʕ*[1]↑ /n/ water (occurring in common speech in set phrases, proverbs, riddles etc.). *maaʕ il-ward* rose-water.

مائى *maaʔi* /adj */ pertaining to water. *magaari maʔiyya* water channels.

م ا ء ²
ماء *maaʔ²* onomatopoeia for the bleating of a sheep or goat. see further under م ء م ء

م ا د see م د ى: *maada*

م ا ذ ا see م ا ز ا

م ا ر
مارى *maari* <Syr> /n/ *[Chr]* title for a male saint. *maari girgis* Saint George.

م ا ر س
مارس *maaris¹* <Fr *mars*> /n/ March.

م ا ز ا
ماذا *maaza: maaza wa-ʕilla* ... or else ...! *ʕawwil ʃ-ʃahr¹ ʕaaxud il-filuus maaza w-ʕilla* on the first of the month I take the money or else ...!

م ا س
ماس *maas* <Fr *masse*> /n/ *[elec]* short-circuit.

م ا ش
ماسة *maaʃa* <P *mâsha*> /n pl *-aat*/ pair of fire tongs.

م ا ل see م و ل: *maal¹, maali, maliyya*

م ا م ا
ماما *maama* /n, constr *maamit-*/ **1** mummy, mother. ‖ *ya maama [children]* exclamation of fear. **2** affectionate form of address to young girls and, by women, to young boys.

م ا ن ا
مانا *maana: ħaana w-maana* see *ħaana*.

م ا ن ى
مانى *maani: kaani w-maani* see *kaani*.

م ا ه see م ه ى ى: *mahiyya*

م ا ى و
مايو *maayu* /n/ May.

م ء ل ت see also ء ل ت
اتمألت *ʔitmaʔlit* /vi/ to make fun (of s.o.). *dayman yitmaʔlitu ʕaleeha* they are always poking fun at her. - vn *maʔlata*; ava *mitmaʔlit*.

م ء ل س see also ء ل س
مألسة *maʔlasa* /n/ derision.
اتألس *ʔitmaʔlis* /vi/ to enjoy disparaging or depreciating. *baṭṭal timaʔliis ʕala n-naas* stop laughing at people! - vn *timaʔlus*; ava *mitmaʔlis*.

م ء م ء see also م ا ء ²
مأمأ *maʔmaʔ* /vi/ to bleat. - vn *maʔmaʔa*; ava *mumaʔmaʔ*.

م ء ن see م و ن: *muʔna, maʔuuna*

م ب ر ¹ see ن ب ر ¹: *mambar, mimbar*

م ب ر ² see م ن ب ا ر: *mumbaar*

م ب ل ى ا
موبيليا *mubilya* (also *nabulya*) <It *mobilia*> /n pl *-aat*/ furniture.

م ت ت ¹
متّ *matt¹* *(i)* /vi/ to be or become related. *ma-bi-ymitt¹-ʃ lina b-ṣila* he is in no way related to us. - ava *maatit*.

م ت ت ²
متّ *matt²* /n/ *[hort]* cord fortifying a graft.

م ت ر ¹
متر *mitr¹* <Fr *mètre*> /n pl *ʕamtaar*/ **1** metre (unit of length). *ʕil-fustaan ʕayiz-lu talatt imtaar ʠumaaʃ* the dress will need three metres of cloth. **2** tape-measure, metre rule.
متري *mitri* /adj/ metric.
مترّ *mattar* /vt/ to measure by the metre. - vn *tamtiir*; ava *mimattar*.
اتمترّ *ʔitmattar* /vi/ to be measured by the metre. - iva *mitmattar*.

م ت ر ² ( )
مترّ *mitr²* <Fr *maître*> /n/ title of, and form of address or reference to, a lawyer or head waiter.
مترّ *mitr³* /n pl *ʕamtaar*/ navigable canal (in the jargon of Nile boatmen).

م ت ر د
متردّ *matrid* /n pl *mataarid*/ earthenware vessel similar

in shape to a *maguur* (see Pl.A, 8), but smaller.

م ت ر ل -
مترليوز *mitrilyooz* <Fr *mitrailleuse*> /n pl *-aat*/ machine-gun.

م ت ر و
مترو *mitru* <Fr *métro*> /n/ metropolitan electric train. *mitru l-ʕanfaaq* underground train system.

م ت ر ي س
متريس *matriis* <Fr *matrice*> /n pl *mataaris*/ *[tech]* matrix.

م ت ر ي -
متريول *matriyool* /n/ *[chem]* nitric acid.

م ت س ك ل
موتوسيكل *mutusikl* <Fr> /n pl *-aat*/ motor-cycle.

م ت ش
ماتش *matʃ* or *matʃ* <Engl> /n pl *-aat, -aat*/ match, game. *matʃ koora* football match.

م ت ع
متعه *mutʕa, mitʕa* /n pl *mutaʕ*/ enjoyment, pleasure.
متع *mitiʕ* /adj */ *[deris]* strong, tough, brawny.
أمتع *ʔamtaʕ* /el/ more/most enjoyable.
متاع *mataaʕ* /n pl *ʔamtiʕa*/ luggage.
متّع *mattaʕ* /vt/ to give pleasure to, cause to rejoice. *ya rabb mattaʕ-na f-xilfit-na* O Lord, let us live to enjoy our children! - vn *tamtiiʕ*; ava/pva *mimattaʕ*.
امتّع *ʔitmattaʕ* /vi/ **1** to derive enjoyment. *laazim tiṣḥa badri ʕafaan titmattaʕ bi-hawa ṣ-ṣubḥ* you must wake up early so as to enjoy the morning breeze. **2** to be privileged. *bi-yitmattaʕ bi-ʔiʕfaaʔ gumruki* he enjoys customs exemption. - ava *mitmattaʕ*.
استمتع *ʔistamtaʕ* /vi/ to derive enjoyment. *ʔistamtaʕ bi-ḥayaat-u ʕaaxir istimtaaʕ* he enjoyed his life to the full - vn *ʔistimtaaʕ*; ava *mistamtiʕ*.

م ت ل see م س ل · *ʔistamtil*

م ت ن
متانه *mataana* /n/ solidity, strength, durability. *gizam zamaan ʕaaxir mataana* in the old days shoes were really tough.
متين *matiin* **1** /adj pl *mutaan, mutana*/ solid, strong, durable. **2** /n/ Dependable One (epithet of God).

أمتن *ʔamtan* /el/ more/most solid, strong etc.
استمتن *ʔistamtin* /vt/ **1** consider strong or durable. **2** to select for strength or durability. - vn *ʔistimtaan*; ava *mistamtin*.

م ت و ر
متور، ماتور *mutoor, mutuur, matuur* <Fr *moteur*> /n pl *-aat, mawatiir*/ motor.

م ث ل see م س ل

م ث ن see [1] م س ن

م ج د
مجد *magd* /n pl *ʔamgaad*/ glory.
مجيد *magiid* /n/ Glorious One (epithet of God).
ماجد *maagid* /n/ Glorious One (epithet of God).
مجّد *maggid* /vt/ to glorify. *bi-nmaggid rabb-i-na* we glorify God. - vn *tamgiid*; ava/pva *mimaggid*.
امجّد *ʔitmaggid* /vi/ to be glorified. - iva *mitmaggid*.

م ج د ع see ج د ع : *magdaʕ, magdaʕa*

[1] م ج ر
مجر *magar* /n/ eighteen carat gold (goldsmiths' term).
المجر *ʔil-magar* /prop n/ Hungary.
مجرة *magara* /n pl *-aat*/ gold or golden disc (similar in size and often in design to a half-sovereign) used in cheap necklaces and bracelets.
مجرى *magari* **1** /adj */ Hungarian. ‖*(ʔid-diizil) il-magari* express train (Hungarian-made). **2** /n */ a Hungarian. **3** /n, no pl/ the Hungarian language.

[2] م ج ر see م ج و ر : *magruur*

م ج ر م see also [1] ج ر م
امجرم *ʔitmagram* /vi/ to act or behave in a cruel ruthless way. - vn *magrama*; ava *mitmagram*.

م ج س ت -
ماجستير *majisteer* <Fr *magister*> /n pl *-aat*/ *[acad]* master's degree.

م ج م ج
مجمج *magmig* /vi/ to become soft, become wobbly. *ʔid-dimmil magmig* the boil softened up. ‖*kalaam mimagmig* empty words. - vn *magmaga*; ava *mimagmig*.
امجمج *ʔitmagmig* /vi/ to wobble. *ʔil-mihallabiyya lissa ṭariyya b-titmagmig* the blancmange is still soft and

wobbly. *bi-timʃi titmagmig fi-baʕḍ-a-ha min it-tuxn* she's so fat that her whole body shakes when she walks. - ava *mitmagmig*.

م ج ن [1]
مجّانا *maggaanan* /adv/ gratis.
مجّاني *maggaani* /adj */ gratis. *taʕliim maggaani* free education. *bil-maggaani* for free, gratis.

م ج ن [2]
مجنة *mugana* <It *mogano*> /n/ mahogany.

م ج ن ص
مجنص *magnaṣ* /n/ very strong person.
مجانص *magaaniṣ* /pl n/ latissimus dorsi muscles. ‖*ya raagil ya magaaniṣ* hey, muscle-man!

م ج و ر
ماجور *maguur* /n pl *mawagiir*/ large earthenware bowl (for kneading etc., see Pl.A, 8). ‖*kafa ʕala l-xabar maguur* ≈ he kept the news under his hat.

م ج ي ر
مجير *majeer* <Fr *majeur*> /adj invar/ *[mus]* major. *sillim il-majeer* major scale.

م ح ح
محّى *muḥḥi*↑: *ʃil-kiis il-muḥḥi* the yolk sac.

م ح ر see also ح و ر [1]
محّر *maḥḥar* /vt/ *[constr]* to smooth or level (plaster) with a *maḥaara*. - vn *tamḥiir*; ava/pva *mimaḥḥar*.
اتمحّر *ʃitmaḥḥar* /vi/ passive of *maḥḥar*. - iva *mitmaḥḥar*.

م ح ض
محض *maḥaḍ* (also *maḥaṭ*) *(a)* /vt/ *[abus]* to give birth to. *yilʕan ʃabu lli maḥaḍ-u* (God) curse his parentage!

م ح ط see م ح ض: *maḥaṭ*

م ح ك
تمحيك *tamḥiik* /vn/ **1** ingratiation, toadying. **2** using pretexts.
تمحيكة *tamḥiika* /pl *tamaḥiik*/ instance noun of *tamḥiik*.
اتمحّك *ʃitmaḥḥak* /vi/ **1** to ingratiate oneself (with s.o.) for ulterior motives. *ʃitmaḥḥakt' fil-mudiir ʕaʃaan ʃaṭlub ʃagaaza* I made up to the director in the hope of getting a holiday. **2** to use a pretext, pick (on s.th.) as an excuse for carrying out one's own intentions. *ʃitmaḥḥak fi-kilma w-ʕamal-lu dawʃa* he picked on a word (that was said) and used it to stir up a lot of fuss. - ava *mitmaḥḥak*.
استمحّك *ʃistimàḥḥak*↓ = *ʃitmaḥḥak*. -ava *mistimaḥḥak*.

م ح ل س
محلس *maḥlis* /vi/ to toady to, make up to. - vn *maḥlasa*; ava *mimaḥlis*.
اتمحلس *ʃitmaḥlis* /vi/ to speak or behave in an unctuous toadying way. *ʕaʕadit titmaḥlis ʕala ʃabuu-ha l-ʏaayit ma waafiʕ ʕala safar-ha* she kept on wheedling her father till he finally agreed to let her make the journey. - ava *mitmaḥlis*.

م ح ن
محن *muḥn* /n/ cunning born of affliction.
محنة *miḥna* /n/ hardship, distress, affliction. *dool ʕayʃiin fi-miḥna min nahaar ʃabuu-hum ma saab if-fuxl* they've been having a hard life ever since their father stopped working.
محون *mamḥuun* /adj */ sexually experienced (especially of women). *ʕuul lil-mara l-mamḥuuna dı tiskut* tell that slut of a woman to shut up!
محّن *maḥḥan* /vt/ to torment with desire. *misik ruzam il-filuus ʕuddaam ʕarayb-u w-ʕaʕad yimaḥḥan-hum ʕaleeha* he picked up the wads of money in front of his relatives and had them itching to get their hands on it. - vn *tamḥıin*; ava/pva *mimaḥḥan*.
امتحّن *ʃitmaḥḥan* /vi/ to be or become tormented with desire. *ʕaʕdiin yitmaḥḥanu ʕala faʕʕa ḥilwa* they are longing to get a nice flat. - ava/iva *mitmaḥḥan*.
امتحن *ʃimtaḥan* **1** /vt/ to examine, set (s.o.) an examination. **2** /vi/ to take an examination. *laazim yimtiḥin fil-ʃingiliizi* he has to take an examination in English. - vn *ʃimtiḥaan*; ava/pva *mımtiḥin*.
امتحان *ʃimtiḥaan* /n pl *-aat*/ examination.
استمحن *ʃistamḥan*↓ = *ʃimtaḥan*. - vn *ʃistimḥaan*; ava/pva *mistamḥan*.

م ح و see م ح ي: *maḥw*

م ح ي
محا *maḥa (i)* /vt/ to obliterate. *ʃimḥi l-mawduuʕ da min muxx-ak* erase that matter from your mind! *ḥa-nimḥii* we'll finish him off! - vn *maḥy, maḥw*↑, *maḥayaan*; ava *maaḥi*; pva *mamḥi*.
محو *maḥw* /vn/ ‖*maḥw il-ʃummiyya* eradication of illiteracy (among the adult population).
ماحي *maaḥi* /adj */ **1** useless, ineffectual (of a person).

ṣaḥb-ak da maaḥi maḥayaan that friend of yours is utterly useless! **2** penniless, poverty-stricken.
أمحى *ʕamḥa* /el/ more/most ineffectual (of a person).
امّحى *ʔitmaḥa* /vi/ to be obliterated. - iva *mitmiḥi*.

م خ خ
مخ *muxx* /n pl *ʕamxaax, mixaax*/ brain. *maṭʕam kibda w-muxx* a liver and brain restaurant. *fattaḥ muxx-ak* (1) be alert! (2) you'd better give (him) a tip. ‖ *ʔin-naas doolat ʕamxaax* those people are stupid. - *kaan muxx-i ḥa-yṭiir* I was about to lose my mind!
مخّخ *maxxax, maxxix* **1** /vt/ to improvise, invent. **2** /vi/ *[deris]* to play the pundit. *ʠaaʕid yimaxxix wi-yxarraf min ɣeer ma yiʕraf ḥaaga* he keeps making pronouncements and rambling on without knowing anything (about the subject). - vn *tamxiix*; ava/pva *mimaxxax*.
امّخّخ *ʔitmaxxax* /vi/ to be improvised, be invented. - iva *mitmaxxax*.

م خ ط
مخاط *muxaaṭ* /n/ mucus, snot.
مخاطي *muxaaṭi* /adj/ slimy, snotty, mucous.
مخّط *maxxaṭ* /vi/ to produce mucilage, become slimy (of certain vegetables during preparation or cooking). - vn *tamxiiṭ*; ava *mimaxxaṭ*.
امّخّط *ʔitmaxxaṭ*↑ /vi/ to blow one's nose. - ava *mitmaxxaṭ*.

م خ ط ر
مخطرة *maxṭara* /n/ swaggering gait.
امّخطر *ʔitmaxṭar* /vi/ to swagger, strut. *xad dabbuura gdiida w-rigiʕ beet-u yitmaxṭar biiha* he got a new pip and went home to swagger about with it. - ava *mitmaxṭar*.

م خ و ل
مخول *maxwil* /vt/ to confuse, perplex. - vn *maxwala*; ava/pva *mimaxwil*.
امّخول *ʔitmaxwil* /vi/ to be or become perplexed. - ava/iva *mitmaxwil*.
استمخول *ʔistimaxwil*↓ = *ʔitmaxwil*. - ava *mistimaxwil*.

م د ا ح
مداح *madaaḥ: sadaaḥ madaaḥ* see *sadaaḥ*.

م د ا م ¹
مدام *madaam*¹ <Fr *madame*> /n pl *-aat*/ title of, and form of address or reference to, a (usually middle- or upper-class) married woman. *madaam samiira*. Mrs. Samira (Samira being her given name). *madaam darwiiʃ* Mrs. Darwish (Darwish being her husband's given or family name). ‖ *ʔil-madaam bitaʕt-i* my wife.

م د ا م ²
see also د و م ¹
مدام، مادام *madaam*² (also *ʕadaam*²↓) /conj/ since, so long as. *madaam miḥammad hina yibʠa laazim tizur-na* since Muhammad is here you must visit us. *madaam ʔintu giitu* since you have come. *madaam humma taʕbaniin ma-fii-ʃ lazma nruḥ-luhum* so long as they're ill, there's no point going to see them.

م د ح ¹
مدح *madaḥ (a)* /vt/ to praise. *ʔil-ʕariis da kull in-naas madaḥit-u* everyone has praised this suitor. - vn *madḥ, madaḥaan, madiiḥ*; ava *maadiḥ*; pva *mamduuḥ*.
مديح *madiiḥ* /n/ **1** eulogy. **2** songs in praise of God and the Prophet Muhammad.
مدّاح *maddaaḥ* /n */ singer of songs in praise of God and the Prophet Muhammad.
مدّح *maddaḥ* /vi/ to utter repeated or extravagant praises. *ʔil-maddaaḥ ʕammaal yimaddaḥ fin-nabi* the singer keeps praising the Prophet. ‖ *maddaḥ in-nabi* name your price! (said by a salesman to a buyer of, e.g., livestock or poultry). - vn *tamdiiḥ*; ava *mimaddaḥ*.

م د ح ²
see س د ا ح : *madaaḥ*

م د د
مدّ *madd*¹ *(i)* /vt/ **1** to extend, stretch out. *ʔil-minabbih ʠarab - maddi ʔiid-u sakkit-u* the alarm clock rang, he stretched out his hand and silenced it. ‖ *maddi ʔiid-u li-* (1) to assist, as in *maddi ʔiid-u liyya fi-waʠt if-ʃidda* he helped me when times were hard (2) to ask for or accept bribes from, as in *ʔana lamma ʕamiddi ʔiid-i mafruuʠ m-amiddi-haa-ʃ li-waaḥid zayyak* when I ask for a bribe it should not be from a (poor) man like you. (3) to beg, as in *wala ymiddi ʔiid-u l-waaḥid* he doesn't beg from anyone. - *maddi ʔiid-u ʕala* (1) to steal, as in *ʕumr-i ma-maddeet ʔiid-i ʕala ḥagaat ɣeer-i* I've never stolen anyone else's things. (2) to hit, as in *ʔiza maddeet ʔiid-ak ʕalee ḥ-aʠrab-ak* if you lay a finger on him, I'll hit you. **2** to prolong, protract. *laazim timidd il-ʔiqaama* you have to (get permission to) extend the period of your residence. *rabb-i-na ymiddi (f-)ʕumr-ak* may God give you long life! **3**↑ to supply. *rusya maddit-na b-silaaḥ* Russia supplied us with arms. — /vi/ **4** to extend, creep (usually of plants). *ʔin-nabaat bi-ymiddi ʕas-suur* the plant climbs over the wall. ‖ *ʕuud madd* stake for plants to climb on. - *ʔil-ʕirʠi*

ymidd' l-saabiɛ gidd [prov] ≈ like father like son. **5** to hasten one's stride. *maddeet li-ɣayɪt ma ħaṣṣalt-a-ha* I hurried until I caught up with her. -vn *madd, madadaan*; ava *maadid*; pva *mamduud*.

مدّ *madd*[2] /n/ **1** pull (of a tide, flood etc.). **2** drawing out of the voice over long vowels. *ħuruuf* (or *ʕaṣwaat*) *il-madd* long vowels.

مدّة *madda*[1] /n pl *-aat*/ **1** instance noun of *madd*[2]. **2** *[ling]* diacrital mark over the letter *ʔalif* denoting hamza vocalized with long *aa* (*ʔaa*).

مادّة *madda*[2], *maadda*↑ /n pl *mawaadd, maddaat*↓/ **1a** substance, matter. *ʔil-mawaadd il-bitroliyya* petroleum products. **1b** material. *ʔil-ʔisṭuwanaat bi-tittammin ħasab il-madda l-musaggala ɛaleeha* the records are priced according to the material recorded on them. *madda xafiifa* light subject-matter. **2** school or university subject. **3a** place (usually a specially erected pavilion) where condolences are received at a funeral. **3b** mourning, period of mourning.

مادّى *maddi, maaddi* /adj */ **1** material. *daliil maddi* material evidence. **2** materialistic. *raagil maddi* a materialistic man. — /n */ **3** materialist.

مادّيّة *maddiyya* /n/ materialism.

ممدود *mamduud* /adj/ *[ling]* followed by a long vowel (of a consonant).

مدّة *mudda* /n pl *-aat, mudad*/ **1** period (of time). *min muddi sana* a year ago. *baɛaa-li mudda ma-ʃuft"-haa-ʃ* it's been a while since I saw her. ‖ *kull' mudda* every so often. **2** *[slang]* prison term, stretch. **3** *[comm]* unit of three minutes used for measuring long-distance telephone calls.

مدّة *midda* /n/ pus.

مدد *madad* **1** /n/ supply, supplies. **2** /interj/ *[Isl]* aid! (cry for aid to God or saints).

مديد *madiid*↑ /adj/ extended, prolonged. *ɛumr' madiid* a long life.

مدّاد *maddaad* /n pl *-aat*/ **1** creeping plant. **2** *[mech]* connecting arm.

امتدّ *ʔitmadd* /vi/ to be or become extended or stretched out. -iva *mitmadd*.

مدّد *maddid* /vt/ **1** to stretch out, lay out. *maddid nafs-ak* stretch out, lie down. **2** to extend, prolong. — /vi/ **3** to suppurate, discharge pus. -vn *tamdiid*; ava/pva *mimaddid*.

تمديدة *tamdiida* /pl *-aat*/ instance noun of *tamdiid*.

امتدّد *ʔitmaddid* /vi/ **1** to be stretched out. **2** to be extended, be prolonged. **3** to stretch oneself out, lie down. *ʔana raayiħ ʔatmaddid fis-sirir* I'm going to stretch out on the bed. -ava/iva *mitmaddid*.

أمدّ *ʔamadd*↑ /vt/ to supply. -vn *ʔimdaad*; ava *mimidd*.

إمداد *ʔimdaad* /n pl *-aat*/ *[mil]* supply.

م د ر see د ر ى[3]: *midra*

م د غ see غ د ن: *madaɣ, madya, ʔitmadaɣ*

م د ل see م د ى ل: *mudill*

م د ل ى

مدلية *midalya* <It *medaglia*> /n pl *-aat*/ medallion.

م د م see م د ا م: *madaam*

م د م و ـ

مدماوزيل *madmiwazeel, madamwazeel* <Fr *mademoiselle*> /n pl *-aat*/ title of and form of address or reference to, a young unmarried lady. -also *mazmazeel, mazmazeeh*.

م د ن[1]

مدنى *madani* /adj */ **1** civil. *ʔil-maħaakim il-madaniyya* the civil courts. **2** civilian. *libs' madani* civilian dress. *laabis madani* wearing civilian clothes. — /n */ **3** civilian.

مدنيّة *madaniyya*↑ /n/ civilization, civilized world. *labsiin quṣayyar - di madaniyya* wearing short skirts - is that (a sign of) civilization?!

مدينه *madiina* /n pl *mudun*/ city. *maglis madiina* city council.

مدّن *maddin* /vt/ to civilize. -vn *tamdiin*; ava/pva *mimaddin*.

امتدّن *ʔitmaddin* /vi/ to be or become civilized. -vn *tamaddun* (also *tamadyun*); ava/iva *mitmaddin*.

م د ن[2] see ء ز ن[1]: *madna*

م د ن[3] see م ى د: *midaan*

م د ى

مدى *mada* /n/ **1** extent, degree, measure. *ɛala mada ʔusbuɛeen* for two weeks, throughout two weeks. **2** period of time. *ɛala ṭuul il-mada mumkin yiɣayyar raʔy-u* with the passage of time he may change his mind.

مادى *maada: kull' maada* (1) with the passage of time. *kull' maada wiṣ-ṣudaaɛ bi-yziid* the headache gets worse as time goes by. (2) every once in a while. *kull' maada ɛala ma yidfaɛ* he takes his time before he pays up. *kull' maada w-maada ɛala ma yiigi* he comes very rarely.

م د ي ل
موديل *mudeel* (also *mudill*) <Fr *modèle*> /n pl *mudillaat*/ **1** fashion, style, model. *mudillaat ir-rabiiʕ* spring fashions. *ʕarabiyya ʃaaxir mudeel* a car of the latest model. **2** fashion model, mannequin.

م ر ء
المرء *ʃil-marʃ* /n/ a person, one. *yoom l-imtiḥaan yukram il-marʃ' ʃaw yuhaan [prov]* (on examination day one is either honoured or humiliated) ≈ it is through trial that every man's worth is discovered.
مره *mara* /n in absol state only/ **1** *[derog]* **1a** woman. *ʃinti ya mara* hey you, woman! ‖ *ya mara* you weakling! you spineless creature! (insult to a man). - *ʃibn' mara* (cowardly, unreliable) bastard. **1b** wife. *ʃil-mara btaʕt-u* ≈ his old woman. **2**↓ woman (as opposed to man). *ʃil-mara ma-tiwris-f' ʕadd ir-raagil* a woman does not inherit as much as a man. **3** a real woman, a feminine female.
مرأة *marʃa↑* /n/ **1** woman, wife. **2** womankind. *ḥuʕuuʕ il-marʃa* women's rights.
مراب *miraat* /fem n, in constr only/ wife of. *miraat-i* my wife. *miraat id-duktuur* the doctor's wife. *miraat ʃabuu* his stepmother.
مروءة *maruuʃa↓*, *muruuʃa* /n/ helpfulness, generosity, gallantry.
مروّة *miriwwa* /n/ stamina, strength.

م ر ت
مرتة *murta* /n/ milk solids left after clarifying butter (by a process which involves adding salt to the butter and boiling it at length; the brown salty milk solids are eaten as a delicacy).

م ر ت د -
مرتديلا *murtadella* <It> /n/ mortadella sausage.

م ر ت ز م
مورتزم *maratizm↓* or *muratizm↓* (also *muraṭizm↓*) <Engl> /n/ rheumatism. - also *rumatizm, marmatism*.

م ر ت ي ز
مرتيز *martiiz* /n/ hammer (of a piano).

م ر ج [1]
مرجان *murgaan, margaan* /n/ **1** coral. **2** sea bream. **3** a Nile fish (Barilius nilotica, Barilius loati).
مرجاني *murgaani, margaani* /adj/ pertaining to coral.

م ر ج [2]
مرج *marag: harag wi-marag* turmoil, chaos.

م ر ج ح
مرجح *margaḥ* /vt/ **1** to swing. *ʕaaʕid wi-bi-ymargaḥ rigl-u* he's sitting swinging his leg. *kalaam mimargaḥ* indecisive talk. **2** to push (s.o.) on a swing, merry-go-round or seesaw. - vn *margaḥa*; ava *mimargaḥ*.
مرجيحه *murgeeḥa* /n pl *maragiiḥ*/ **1** swing. **2** merry-go-round. **3** seesaw.
امرجح *ʃitmargaḥ* /vi/ **1** to swing or be swung. **2** to vacillate. - ava/iva *mitmargaḥ*.

م ر ج ل see also [1] ر ج ل
مرجل *margil* /vt/ to make a man of (s.o.). *kull-a-ha yomeen maʕaana wi-nmargil-u* in just a few days we'll make a man out of him. - vn *margala*; ava/pva *mimargil, mimargal*.
مرجله *margala* /n/ manly behaviour.
امرجل *ʃitmargil* /vi/ **1** to behave in a manly way. **2** to be made a man of. - ava/iva *mitmargil*.

م ر ح
مرح *maraḥ* /n/ gaiety, cheerfulness.
مرح *mariḥ* /adj */ happy, cheerful.
مرّح *marraḥ* /vi/ to stretch out, relax. *ʕaaʕid mimarraḥ ʕak-kanaba* reclining on the sofa. - vn *tamriiḥ*; ava *mimarraḥ*.

م ر خ
المرّيخ *ʃil-marriix* /prop n/ (the planet) Mars.

م ر د [1]
مارد *maarid* /n pl *marada*/ giant.
امرّد *ʃitmarrad* /vi/ to rebel. - vn *tamarrud↑*; ava *mitmarrad*.
متمرّد *mutamarrid↑* /n */ rebel.

م ر د [2] see [1] و ر د : *muráda, murda*

م ر د غ
مردغ *mardaɣ* /vt/ to roll in the dirt. - also *marraɣ, marmaɣ*. - vn *mardaɣa*; ava/pva *mimardaɣ*.
اتمردغ *ʃitmardaɣ* /vi/ to roll, or be rolled, in the dirt. - also *ʃitmarraɣ, ʃitmarmaɣ*. - ava/iva *mitmarmaɣ*.

م ر ر [1]
مرّ *marr (u)* /vi/ **1** to elapse, go by, pass. *ʃil-ʃayyaam bi-tmurr* the days go by. *li-ḥadd' ma tmurr il-ʃazma*

until the crisis is over. **2** to pass, run, flow, go. *ʃil-mayya bi-tmurr' f-qaʕr il-xaṭṭ* the water flows along the bottom of the furrow. *ʃil-musṁaar bi-ymurr' fii min id-daaxil* the nail goes through it from the inside. *ʃil-ʕarabiyyaat bi-tmurr' min taḥt ik-kubri* the cars pass under the bridge. **3** to take place. *ʃil-ʕamaliyya di bi-tmurr' ṭabiiʕi giddan fi-maṣr* this kind of thing passes without comment in Egypt. - vn *marr, mararaan, muruur*; ava *maarir*.

¶ *marr[a] ʕala* (1) to pass by with a brief stop, as in *b-amurr[a] ʕalee kull' yomeen* I call in on him every two days, *marreet ʕala sayyid-na l-ḥuseen* I dropped by the Hussein mosque. (2) to check, inspect, as in *ʃig-garraaḥ bi-ymurr[a] ʕal-ʕayyaniin* the surgeon makes the rounds of the patients, *murr[a] ʕalee bil-qalam il-ʃaḥmar qabl' ma yruuḥ il-maṭbaʕa* check it over (marking) with a red pencil before it goes to the press. (3) to come to the attention of, as in *ma-marrit-ʃ' ʕaleek ik-kilmaa-di* haven't you come across this word? - *marr' bi-* (1) to undergo, as in *fii maraaḥil bi-tmurr' biiha* it goes through several stages, *ʃiḥna marreena b-nafs il-mafaakil* we have suffered from the same problems. (2) to make a brief stop at (a place) in passing, as in *ʃana marreet bi-bariis fi-ṭariiq-i l-landan* I stopped off at Paris on my way to London.

مرّة *marra* /n pl *-aat*/ instance, time. *talat marraat* three times. *nizilt' marra wi-tneen wi-talaata* I went down once, and then a second and third time. *kull' waaḥid yifuuṭ marra* each one shoots once. *(fi-)marra kunt' maʕzuum maʕa mraat-i* once I was invited with my wife. *misiir-i f-marra ʃaṣṭaad-ak ya ʕirra* I'm bound to get you sometime, you scoundrel! ‖ *marraat* (1) many times, time and again. (2) sometimes, occasionally. - *marra waḥda* (1) at one and the same time, simultaneously, as in *bi-nṣubb is-saqf' wil-kamaraat marra waḥda* we lay the roof and the girders at one go. (2) all at once, as in *kaan faqiir wi-marra waḥda baqa ɣani* he was poor and suddenly he became rich. - *marra ... wi-marra* or *marraat ... marraat* at times ... at other times, as in *marra lik wi-marra ʕaleek* ≈ you can't win them all. - *bil-marra* (1) at the same time (as s.th. else), as in *madaam ʃinta naazil is-suuq hat-li kabriit bil-marra* since you're going shopping, get me some matches while you're at it, *ma-naaxud taks' wi-nwaṣṣal-u bil-marra* let's take a taxi and drop him off on the way. (2) /in neg contexts/ (not) at all, as in *ʃiḥlif ma-tifrab (sagaayir) bil-marra* swear you'll never smoke! *mif ʕaawiz ʃafuuf-ak hina bil-marra* I don't want to see you here at all!

مرور *muruur* /n/ traffic. *qalam il-muruur* the Traffic Department. *maṣr' muruur* Cairo transit (post office).

ممرّ *mamarr* /n pl *-aat*/ **1** passageway, corridor. **2** path.

مرّر *marrar[1]* /vt/ to cause to pass. - vn *tamriir*; ava/pva *mimarrar*.

تمريرة *tamriira* /n pl *-aat*/ a pass (in soccer, hockey etc.).

استمرّ *ʃistamarr* /vi/ to continue. *bi-nistamirr' fin-naqaawa l-yadawiyya l-muddit ʃahreen* we continue hand-picking for two months. *ḥa-yistamirr' fil-liʕba lin-nihaaya* he will stay on in the game till the end. - vn *ʃistimraar*; ava *mustamirr*.

استمرار *ʃistimraar* /n/ continuousness, continuation. *bi-stimraar* continuously.

استمرارى *ʃistimraari* /adj/ continuous.

م ر ر 2

مرّ *murr* **1** /adj/ bitter, galling. *qahwa murra* sugarless coffee. *ʕift-i maʕaahum murra* my life with them is bitter. ‖ *ʃeef ramaa-k ʕal-murr. - qaal ʃilli ʃamarr' minnu [prov]* ≈ one is sometimes forced to choose the lesser of two evils. **2** /n/ myrrh.

مرّة *murra* /n/ hardship. *ʃil-ḥilwa wil-murra* ≈ good and bad, thick and thin. *waqfa gamb' goz-ha fil-ḥilwa wil-murra* she stands by her husband through thick and thin.

مرارة *mararaan* /n/ bitterness.

أمرّ *ʃamarr* /el/ more/most bitter, more/most galling.

مرار *maraar* /n/ bitter suffering.

مرارة *maraara* /n/ **1** bitterness, gall. *b-aḥiss' bin-nadam wi-bil-maraara* I feel regret and bitterness. **2** gall bladder. ‖ *marart-u dayyaqa* he is short-tempered. - *di ḥaaga tifqaʕ il-maraara* this is enough to make you blow a gasket!

مرير *mariir*↑ /adj/ bitter, galling.

مرّر *marrar[2]* /vi/ to become bitter or galling. *ʃil-ʃakl' marrar* the food became bitter. *ʃil-ḥikaaya marrarit qawi* the affair went from bad to worse. - ava *mimarrar*.

استمرر *ʃistamrar* /vt/ to consider (too) bitter. *kunt' fil-ʃawwil b-astamrar il-qahwa s-saada* at first I used to find sugarless coffee too bitter. - ava *mistamrar*.

م ر ز

ميرز *mirz* /coll n/ pieces of mother-of-pearl cut to shape for use in inlay.

م ر س 1

اتمرّس *ʃitmarras* /vi/ to become thoroughly familiar (with s.th.), become an adept. *da mitmarras bis-suuq tamaam* he knows the market inside out. - vn *tamarrus*; ava *mitmarras*.

مارس *maaris*[2] /vt/ **1** to practise, engage in. *mumkin iṭ-ṭalaba ymarsu koora ṭayra* the students can take up volley-ball. *bi-ymaaris ig-gins* he engages in sexual activity. **2** to perform, execute. *bi-ymaaris masʕuliyyaat-u* he carries out his responsibilities. - vn *mumarsa*; ava *mimaaris*.

ممارسة *mumarsa* /n pl *-aat*/ sale by private agreement.

ممارس *mumaaris* /n */: *mumaaris ɛaamm* general practitioner.

اتمارس *ʕitmaaris* /vi/ **1** to be practised, be engaged in. **2** to be performed, be executed. - iva *mitmaaris*.

م ر س [2]

مرس *mars* <P *mars*> /n pl *-aat*/ a round in backgammon in which the winner removes all his chips from the board before his opponent removes any; a gammon (cf. *ʕuyun*).

م ر س [3] see م ا ر س : *maaris*[1]

م ر س [4] see م ر ى س : *ʕil-miriisi*

م ر س [5] see و ر س : *miraas*

م ر س ت –

مرستان *murustaan* <P *mâristân*> /n/ lunatic asylum, bedlam. ‖*ɛamaluu-li murustaan fi-dmaaɣ-i* they caused a babel in my brain.

م ر س ح see س ر ح : *marsaḥ*

م ر س و ن

مرسون *marasoon* <Engl> /n/ *[athl]* marathon.

م ر س ى

مرسى *mirsii* <Fr *merci*> /interj/ thank you! *mirsii ɋawi* thank you very much!

م ر س ى –

مرسيدس *marseedis* or *marsiidis* <prop n *Mercedes*> /n/ Mercedes car. - also *marfeedis*, *marfiidis*.

م ر س ى س

مرسيس *marsiis: xarsiis marsiis* see *xarsiis*.

م ر ش

مرش *marʃ* <Fr *marche*> /n pl *-aat*/ **1** march. *ʕiṭ-ṭabla di ʕilli b-yiṭabbilu ɛaleeha l-marʃaat* this drum is the one on which they beat out the marches. **2** *[auto]* **2a** ignition, starter. **2b** *marʃ aryeer* reverse, back up. *ʕiɛmil marʃ aryeer* back up!

م ر ش ى –

مرشيدس *marʃeedis* or *marʃiidis* <prop n *Mercedes*> /n/ Mercedes car. - also *marseedis*, *marsiidis*.

م ر ض

مرض *miriḍ (a)* /vi/ to fall ill, become sick. - vn *maraḍ*; ava *marḍaan*.

مرض *maraḍ[1] (i)* /vt/ **1** to cause to be ill. *huwwa l-ʕakl illi maraḍ-ni* it was the food which made me ill. **2** to upset, annoy. - vn *maraḍaan*; ava *maariḍ*; pva *mamruuḍ*.

مرض *maraḍ*[2] /n pl *ʕamraaḍ*/ illness, disease. *ʕamraaḍ nisa* gynaecological diseases or disorders. ‖*maraḍ il-kalb* rabies. - *ʕil-ɣaraḍ maraḍ [prov]* (prejudice is a disease) ≈ you cannot judge things properly if your interest is in the way.

مرضى *maraḍi* /adj/ pertaining to illness. *ʕagaaza maraḍiyya* sick-leave.

مريض *mariiḍ* /pl *marḍa, muraḍa*↓/ **1** /adj/ ill, sick. **2** /n/ patient.

اتمرض *ʕitmaraḍ* /vi/ to be or become depressed or exasperated. *ʕana tmaraḍt[i] mif-fuɣlaa-di* I'm fed up with this job. - ava/iva *mitmiriḍ*.

مرّض *marraḍ* /vt/ to nurse (the sick). - vn *tamriiḍ*; ava *mimarraḍ*.

ممرّض *mumarriḍ* /n */ male professional nurse.

ممرّضة *mumarriḍa* /n pl *-aat*/ female professional nurse.

اتمرّض *ʕitmarraḍ* /vi/ to be nursed (medically). - iva *mitmarraḍ*.

اتمارض *ʕitmaariḍ* /vi/ to feign illness. *bi-yitmaariḍ ɛaʃaan yaaxud ʕagaaza* he pretends to be ill in order to get leave of absence. - vn *tamaaruḍ*; ava *mitmaariḍ*, *mutamaariḍ*.

م ر ط ز م see م ر ت ز م : *muraṭizm*

م ر ع

مرع *maraɛ↓ (a)* /vt/ **1** to rip, tear up. **2** to inflate the pride of. – /vi/ **3** to boast extravagantly, tell fishing stories. - vn *marɛ*; ava *maariɛ*; pva *mamruuɛ*.

مرعة *marɛa↓* instance noun of *marɛ*.

مرّاع *marraaɛ↓* /adj */ boastful.

اتمرع *ʕitmaraɛ↓* /vi/ to swell with pride. - ava *mitmiriɛ*.

مرّع *marraɛ↓* /vt/ to rip, tear up. *lamma gaa-lu ṣ-ṣaraɛ marraɛ hiduum-u* when he had a fit of epilepsy he tore his clothes. - vn *tamriiɛ*; ava/pva *mimarraɛ*.

اتمرّع ʔitmarraɛ↓ /vi/ passive of *marraɛ*. - iva *mitmarraɛ*.

م ر غ

مرغ *maray (u)* **1** /vt/ to roll (s.th. or s.o.) in the dust. **2** /vi/ to delay, tarry, take a long time. *ma-tumruɣ-f' fis-sikka* don't dilly-dally on the way. **3** /vi/ to talk nonsense. - vn *marayaan, maryː*; ava *maariɣ*; pva *mamruuɣ*.

مرغ *miriɣ* /adj */ easy-going, leisurely and slow.

أمرغ ʔamray /el/ more/most leisurely or slow.

مرّاغ *marraay* /adj */ **1** = *miriɣ*. **2** over-talkative.

اترغ ʔitmaray /vi/ to be rolled in the dust. - iva *mitmiriɣ*.

مرّغ *marray* /vt/ to roll successively on the ground or in the dust. - also *mardayː, marmayː*. - vn *tamriiɣ*; ava/pva *mimarray*.

اتمرّغ ʔitmarray /vi/ to roll or be rolled successively on the ground or in the dust. ‖ *ʔin faat-ak il-miiri ʔitmarray fi-traab-u [prov]* ≈ a government job, no matter how base, is better than any other job. - also *ʔitmardayː, ʔitmarmayː*. - ava/iva *mitmarray*.

م ر ف ي ن

مورفين *murfiin* <Fr> /n/ morphine.

م ر ق [1]

مرق *miriq* /adj */ **1** runny, liquid (of food). **2** slow, confused (of people).

مرق *maraq* /n/ stock, bouillon, broth. ‖ *baqa ɛaraq-i maraq-i* ≈ I'm burning with embarrassment.

مرقة *maraqa = maraq*.

اترق ʔitmaraq /vi/ to become moist or liquid (of food). - ava *mitmiriq*.

مرّق *marraq* /vt/ to make (food) moist or liquid. - vn *tamriiq*; ava/pva *mimarraq*.

م ر ق [2]

مرق *maraq↓ (u)* /vi/ to go at a fast pace. *ʔimruq min hina* push off! - vn *maraqaan*; ava *maariq*.

مرّق *marraq↓* /vt/ to let (s.o. or s.th.) pass. - vn *tamriiq*; ava *mimarraq*.

م ر ق ص

مرقص *murquṣ* /prop n/ *[Chr]* male given name. *maari murquṣ* St. Mark.

مرقصي *murquṣi* /adj/ pertaining to St. Mark. *ɛamalu l-faraḥ fi(l-kiniisa) l-murquṣiyya* they had the wedding in St. Mark's Church.

م ر ق ع

مرقع *marqaɛ* /vt/ to make (s.o.) frivolous or flighty. - vn *marqaɛa*; ava *mimarqaɛ*.

اترقع ʔitmarqaɛ /vi/ to dally, tarry, potter. *ɛayzaa-li raagil la yitmarqaɛ wala yiskar* I want a man who won't dilly-dally around or get drunk. - vn *marqaɛa*; ava *mitmarqaɛ*.

(م ر ك)

مرك *mark* <Fr *marque*> /n pl *-aat, -aat*/ tailor's marker.

مرك *mark* <Fr *marque*> /n pl *-aat*/ metal or plastic token (purchased and then given up in exchange for, e.g., drinks in a snack bar).

مركة *marka = mark*.

مركة *marka[1] = mark*. ‖ *walad marka* a lad who's on-the-ball.

ماركة *marka[2]* <It *marca*> /n pl *-aat*/ brand, make, trade name.

م ر ك ز see also ر ك ز

مركز *markiz* /vt/ **1** to determine the centre. *markiz id-dayra* he determined the centre of the circle. **2** to put into a central position, centralize. *markiz il-koora* centre the ball! *markiz wasaaʔil il-ʔintaag fi-manṭiqa waḥda* he centralized the means of production in one area. - vn *markaza*; ava/pva *mimarkiz*.

امركز ʔitmarkiz /vi/ passive of *markiz*. - iva *mitmarkiz*.

م ر ك ز -

مركزيت *markazitt* <Fr> /n/ marquisette (fabric).

م ر ك س

مركسي *markisi* <prop n *Marx*> **1** /adj */ Marxist. **2** /n */ a Marxist.

مركسيّة *markisiyya* /n/ Marxism.

مركس *markis* /vt/ to make (s.o. or s.th.) Marxist or (loosely) leftist. - vn *markasa*; ava/pva *mimarkis*.

امركس ʔitmarkis /vi/ to be made Marxist or (loosely) leftist. - iva *mitmarkis*.

م ر ك و -

مركوني *markooni* <prop n *Marconi*> /n/ *[naut]* wireless operator.

م ر ل ا ي see ء م ر [1]: *miralaay*

م ر م ت -

مرمتزم *marmatizm↓* <Engl> /n/ rheumatism. - also *maratizm, muratizm, rumatizm*.

م ر م ر

مرمر *marmar* /n/ alabaster, translucent marble.

م ر م ط
مرمط *marmaṭ* /vt/ to mishandle, bear hard on, victimize. *marmaṭuu-ni ʔuddaam illi yiswa wi-lli ma-yiswaa-ʃ* they treated me like dirt in front of everyone. *marmaṭit-u fil-maḥaakim* she dragged him through the courts. - vn *marmaṭa*; ava/pva *mimarmaṭ*.
اتمرمط *ʔitmarmaṭ* /vi/ to be given a hard time, be victimized. *ʔitmarmaṭ fi-ḥayaat-u* he's had a wretched life. - iva *mitmarmaṭ*.

م ر م ط –
مرمطون *marmaṭoon* <Fr *marmiton*> /n pl *-aat*/ drudge, scullion.

م ر م غ
مرمغ *marmaɣ* /vt/ to roll (s.o. or s.th.) in the dirt. - also *mardaɣ*, *marraɣ*. - vn *marmaɣa*; ava/pva *mimarmaɣ*.
اترمغ *ʔitmarmaɣ* /vi/ to roll or be rolled in the dirt. - also *ʔitmardaɣ*, *ʔitmarraɣ*. - ava/iva *mitmarmaɣ*.

م ر ن [1]
مرن *marin*, *mirin* /adj */ pliant, flexible.
مران *miraan*ˀ /n/ practice. *ʔil-xibra wil-miraan* experience and practice.
مرونة *muruuna* /n/ pliancy, flexibility.
مرّن *marran* /vt/ to cause to practise, train. *marranit-ni fis-sibaaḥa* she gave me swimming practice. *ɛallim-ni w-marran-ni f-ʃuɣl-u* he taught me and trained me in his work. ‖*fatra taḥt it-tamriin* probationary training period. - vn *tamriin*; ava/pva *mimarran*.
تمرين *tamriin* /n pl *-aat*, *tamariin*/ exercise. *tamrinaat riyaḍiyya* (1) physical exercises. (2) mathematical exercises.
اتمرّن *ʔitmarran* /vi/ **1** to be trained, **2** to practise, do exercises. *bi-yitmarran ɛal-biyaanu* he's practising at the piano. - ava/iva *mitmarran*.

م ر ن [2] see م ر ي ن : *mariina*

م ر و see م ر ء : *miriwwa*

م ر ى see ر ء ى : *miraaya*

م ر ي س [1] see also ر ء س
مريسة *maryasa* /n/ overbearing behaviour, bossiness.
اتمريس *ʔitmaryis* /vi/ to act the boss, throw one's weight around. - ava *mitmaryis*.

م ر ى س [2]
المريسى *ʔil-miriisi* <Copt> /n/ south wind (in the jargon of Nile boatmen).

م ر ي ن
مرينة *mariina* /n pl *maraayin*/ *[constr]* standard-size wooden beam four metres by ten centimetres by ten centimetres.

م ر ي ن –
مريانوس *maryanoos* /n/ *[obsol]* kind of thick cotton material.

م ز ج
مزج *mazagˀ (i)* /vt/ **1** to mix, blend. **2** to put in a good mood. - vn *mazg*, *mazagaan*; ava *maazig*; pva *mamzuug*.
مزاج *mazaag* /n pl *ʔamziga*, *mazagaat*/ **1** humour, mood, fancy. *ɛala mazaag-ak* as you like. *ɛakkar mazaag-i* it put me in a bad humour. *ma-lii-ʃ* (or *ma-ɛandii-ʃ*) *mazaag* I don't feel like it, I'm not in the mood. *bi-mazaag* eagerly and with pleasure. ‖*bi-mazaag-(u)* (1) whenever or however (one) pleases, as in *b-aftaɣal bi-mazaag-i* I work to suit myself. (2) of (one's) own free will, as in *ʔil-mudiir bi-yakul-ha b-mazaag-u* the director knowingly allows himself to be duped. - *daxal mazaag* ... to be pleasing to ..., as in *ʔil-bitiʿ daxla mazaag-i ɋawi* the girl is just my cup of tea, *ɋablit il-mudiir wi-daxalit mazaag-u* she met the director and gained his approval. - *xad mazaag-(u)* to have (one's) fill, as in *lamma ʔaaxud mazaag-i min il-ɛarabiyya di ḫ-aftiri ɣer-ha* when I've had enough of this car, I'll buy another. - *ṣaaḥib mazaag* a man fond of good living. **2** object of one's fancy, object of pleasure. *da mazaag ɛandu* it gives him pleasure. **3** *ʔil-mazaag* hashish. ‖*mazaag ɛaali* high quality of hashish. - *ʔibnʿ mazaag* hashish-smoker.
مزيج *maziig* /n/ medical preparation, mixture.
اتمزج *ʔitmazagˀ* /vi/ passive of *mazag*. - iva *mitmizig*.
مزّج *mazzig* /vt and vi/ to please, gratify. - vn *tamziig*; ava/pva *mimazzig*.
اتمزّج *ʔitmazzig* /vi/ to be or become pleased or gratified. - ava/iva *mitmazzig*.
مازج *maazig* /vt/ to humour, gratify the fancy of (s.o.). *ɋaɛadt amazig-ha l-ɣaayit ma riḍyit* I kept humouring her until she agreed. - vn *mimazga*; ava/pva *mimaazig*.
اتمازج *ʔitmaazig* /vi/ **1** to be humoured, have one's fancy gratified. **2** to amuse oneself. - ava/iva *mitmaazig*.

م ز ر ط
اتمزرط *ʔitmazraṭ* /vi/ *[abus]* to put on airs, shoot a line. - vn *mazraṭa*; ava *mimazraṭ*, *mitmazraṭ*.

م ز ز [1]
مزّ *mazzʾ (i)* /vt/ to card (cotton, wool etc.). - vn *mazz*;

ava *maaziz*; pva *mamzuuz*.

مزّة *mazza*[1] /pl *-aat*/ instance noun of *mazz*. *mazzu ṣ-ṣuuf mazza ḥilwa* they gave the wool a good carding.

اتمزّ *ʔitmazz* /vi/ to be carded (of cotton, wool etc.). - iva *mitmazz*.

[2] م ز ز

مزز *miziz* /adj/ sour. *ʔil-lamunaata mizza* the lemonade is sour.

مزّان *mazazaan* /n/ sourness, tartness.

مزازة *mazaaza = mazazaan*.

مزّز *mazziz*[1] /vi/ to become sour. - vn *tamziiz*; ava *mimazziz*.

[3] م ز ز

مزّة، مازّة *mazza*[2] <T *meze* from P> /n pl *-aat*/ hors d'oeuvres served with drinks.

مزّ *mazz*[2] *(i)* /vi/ to pick (at hors d'oeuvres served with drinks). - vn *mazz*; ava *maaziz*.

مزّز *mazziz*[2] /vi/ to eat *mazza*. - ava *mimazziz*.

م ز ع

مزع *mazaɛ (a)* **1** /vt/ **1a** to rip. *mazaɛ il-waraq nuṣṣeen wi-ramaa f-wiff-i* he ripped the papers in half and threw them at me. **1b** to rip off, wrench off. *nataɛ il-baab mazaɛ-u min maṭraḥ-u* he wrenched the door and ripped it off its hinges. **2** /vi/ to tell whopping lies, spin yarns. - vn *mazɛ*; ava *maaziɛ*; pva *mamzuuɛ*.

مزعة *mazɛa* /n pl *-aat*/ tall story, whopping lie.

أمزع *ʔamzaɛ* /el/ more/most given to telling extravagant lies.

مزّاع *mazzaaɛ* /n */ teller of whopping lies.

اتمزع *ʔitmazaɛ* /vi/ **1a** to rip, be ripped. **1b** to be ripped off, be wrenched off. **2** to become inflated with pride. *ʔitmazaɛ lamma qaluu-lu ʔinta gadaɛ* it made him feel good when they told him he was a fine fellow of a man. - ava/iva *mitmiziɛ*.

مزّع *mazzaɛ* /vt/ to tear to shreds. - vn *tamziiɛ*; ava/pva *mimazzaɛ*.

اتمزّع *ʔitmazzaɛ* /vi/ **1** to tear, become torn. **2** to be torn to shreds. - ava/iva *mitmazzaɛ*.

م ز ق

مزق *mazaq (u)* /vt/ to tear (a muscle). *mazaqt' ḍahr-i w-ʔana ʃaylaa* I strained my back when I was carrying him. - vn *mazaqaan, mazq*; ava *maaziq*; pva *mamzuuq*.

مزقة *mazqa* /n pl *-aat*/ **1** instance noun of *mazq*. **2** a tear, a sprain.

اتمزق *ʔitmazaq* /vi/ to tear or be torn (of a muscle). - ava/iva *mitmiziq*.

مزّق *mazzaq* /vt/ to tear up, cut to shreds. *mazzaqit-lu ḥduum-u* she tore up his clothes. - vn *tamziiq*; ava/pva *mimazzaq*.

اتمزّق *ʔitmazzaq* /vi/ **1** to tear (of muscles). **2** *[Isl]* to become an unbeliever (Sufi usage). **3** to be torn up, be cut to shreds. - ava/iva *mitmazzaq*.

م ز ك

مزّيكه *mazziika* /n/ **1** music. **2** /pl *mazaziik*/ mouth-organ.

مزّيكاتي *mazzikaati*↓ /n pl *-yya*/ (musical) instrumentalist.

مزّك *mazzik* /vi/ to make music. *qaaɛid yimazzik fig-gineena ɛaʃaan ḥadd' yiddii-lu qirf* he sits playing music in the park so that people will give him a piastre. - vn *tamziik*; ava *mimazzik*.

اتمزّك *ʔitmazzik* /vi/ (impersonal) passive of *mazzik*. *laazim yitmazzik-lu ɛaʃaan yinaam* he has to have music played to him before he can get to sleep. - iva *mitmazzik*.

م ز ل ق see also ز ل ق

مزلق *mazlaq* /vi/ to become slimy. *ʔil-ʔakl' mazlaq wi-tvayyar ṭaɛm-u* the food become slimy and its taste changed. - vn *mazlaqa*; ava *mimazlaq*.

– م ز م ب

مزمبليه *mizambiliih* <Fr *mise en plis*> /n pl *-aat*/ hair-set(ting).

م ز م ز

مزمز *mazmiz* /vi/ **1** to nibble at food. **2** to enjoy at leisure. *xadt il-ɛaʃara gneeh qaɛadt amazmiz fiihum ɛala mazaag-i* I took the ten pounds and enjoyed spending them bit by bit. - vn *mazmaza*; ava *mimazmiz*.

– م ز م ز

مزمزيل *mazmazeel*↓ <Fr *mademoiselle*> /fem n, pl *mazmazillaat*/ title of, and form of address or reference to, a young unmarried woman. - also *madimwazeel, madamwazeel*.

مزمزيه *mazmazeeh*↓ /fem n, pl *mazmazehaat*/ *= mazmazeel*.

م ز ن see و ز ن : *mizaan, mizaniyya*

– م ز ن س

ميزنسين *mizanseen* <Fr *mise en scène*> /n/ direction (of a play, film).

م ز و ر
مازورة *mazuura* <It *misura*> /n pl *mawaziir*/ **1** *[mus]* measure, bar. **2** tape-measure.

م ز ي
مزيّة *maziyya* /n pl *mazaaya*/ merit, virtue.

م ز ي ك و
مزيكو *muzayku* <It> /n/ **1** mosaic. **2** name given to various manufactured imitations of marble.

م س ا ج
مساج *masaaj* <Fr> /n/ massage.

م س ء see م س ى

م س ت ك
مستكة، مصطكة *mistika* <Gr *mastikha*> /n/ mastic.

م س ت ى ك
مستيكة *mastiika* <Gr *mastikha*> /coll n/ chewing gum.

م س ج see م س ا ج : *masaaj*

م س ح
مسح *masaḥ (a)* /vt/ **1** to wipe (clean). *ʕimsaḥ wiff-ak bil-mandiil* wipe your face with the handkerchief! *ʕimsaḥ-li g-gazma* polish my shoes for me! *ʕilli yquul-u n-nahar-da yimsaḥ-u b-ʕastiika bukra* ≈ what he says one day, he denies the next. *ḥ-amsaḥ biik il-ʕarḍ* I'll wipe the floor with you! ‖*masaḥ-l(u) guux* to toady to (s.o.). **2** *[Chr]* to anoint. **3** to survey, scan. **4** to smooth (with a plane). **5** *[agric]* to deepen (furrows) with a mattock after ploughing. – /vi/ **6** to glow with health, look glossy and in good condition. - vn *masḥ, masaḥaan*; ava *maasiḥ*; pva *mamsuuḥ*.
مسح *masḥ* **1** /vn/ ‖*kawitf' masḥ* a worn tyre. - *maqrab masḥ* ping-pong bat with a smooth rubber surface. **2** /n/ *[agric]* (season of) the widening of furrows in preparation for planting cotton.
مسحة *masḥa* /n pl *-aat*/ instance noun of *masḥ*.
مسحيّة *masḥiyya = masḥa*.
مسحاة *misḥa* /n pl *-aat*/ *[non-Cairene]* mattock, hoe.
مساحة *misaaḥa* /n pl *-aat*/ surface area, space. *ʕil-ḥukuuma bi-tḥaddid il-misaḥaat il-mazruuʕa quṭn* the government specifies the surface area of cotton that may be planted. ‖*maṣlaḥit il-misaaḥa* the Survey Department.
المسيح *ʕil-misiiḥ* or *ʕil-masiiḥ* /prop n/ the Messiah, Christ. *wil-misiiḥ il-ḥayy* by the Living Christ! *ʕil-misiiḥ* (or *ʕil-misiix) id-daggaal* (or *ig-gaddaal*↓) the Anti-Christ.
مسيحي *misiiḥi* or *masiiḥi* **1** /adj */ Christian. **2** /n */ a Christian.
مسيحيّة *misiḥiyya* or *masiḥiyya* /n/ Christianity.
مسّاح *massaaḥ* /n */ surveyor.
مسّاحة *massaaḥa* /n pl *-aat*/ wiper. *massaaḥit ʕarabiyya* car (windscreen) wiper.
ممسحة *mamsaḥa* /n pl *mamaasiḥ*/ **1** mop. **2** doormat.
اتمسح *ʕitmasaḥ* /vi/ passive of *masaḥ*. - iva *mitmisiḥ*.
مسّح *massaḥ* **1** /vt/ to wipe. **2** /vi/ to make a pass or passes (with the hand over s.o. or s.th.). - vn *tamsiiḥ*; ava *mimassaḥ*.
تمسيحة *tamsiiḥa* /pl *-aat*/ instance noun of *tamsiiḥ*.
اتمسّح *ʕitmassaḥ* /vi/ **1** to rub oneself (against s.th.). *gat il-quṭṭa titmassaḥ fi-rigl-i* the cat came and rubbed up against my leg. ‖*bi-yitmassaḥ fiina ʕafaan ʏadwa* he hangs around us hoping for a meal. **2** to create an appearance of relationship (e.g., with influential persons). *ʕammaal yitmassaḥ fil-ʕeela di* he's always making himself out to be a member of this family. **3** to be wiped. - ava/iva *mitmassaḥ*.

م س خ
مسخ *misix (a)* /vi/ to become tasteless or insipid. - vn *masaxaan*; ava *maasix, masxaan*.
مسخ *masax (a)* /vt/ to transform into (s.th. inferior). *rabb-i-na masax-u ʠird* God changed him into a monkey. ‖*kalaam mamsuux* garbled words. - vn *masaxaan, masx*; ava *maasix*; pva *mamsuux*.
ماسخ *maasix* /adj */ tasteless, bland, insipid. ‖*xallaa-ha masxa* he exceeded the bounds of good taste. *-ʃaay maasix* watery tea.
مسخة *musxa* /n pl *musax*/ laughing-stock, object of ridicule.
أمسخ *ʔamsax* /el/ more/most insipid, bland, tasteless etc.
المسيخ *ʕil-misiix, ʕil-masiix: ʕil-misiix id-daggaal* (also *ʕil-masiiḥ id-daggaal*) /prop n/ the Anti-Christ.
اتمسخ *ʕitmasax* /vt/ to be turned into, transformed into (s.th. inferior). - iva *mitmisix*.
مسّخ *massax* **1** /vt/ to mar, spoil. *kutr il-mikyaaj massax gamal-ha* too much make-up spoiled her beauty. ‖*massax il-kalaam ʕaleena* he spoke unpleasantly about us. **2** /vi/ to become tasteless or bland. *ʕil-ḥikaaya di massaxit ʠawi* this affair has gone quite stale. - vn *tamsiix*; ava/pva *mimassax*.
اتمسّخ *ʕitmassax* /vi/ to be marred, be spoiled. - iva *mitmassax*.

م س خ ر see also س خ ر ¹
مسخر *masxar* /vt/ **1** to slate, abuse. *kunt axaaf ʕafrab kitiir la-yiɛrafu fil-beet fa-ymasxaruu-ni* I was afraid to drink a lot lest they find out at home and give me a tongue-lashing. **2** *[slang]* to beat soundly, leave (s.o.) without a leg to stand on (e.g., in a match, competition, argument etc.). - vn *masxara*; ava/pva *mimasxar*.
مسخرة *masxara* /n/ **1** /pl *masaaxɪr*↑/ (piece of) preposterous behaviour, farce. **2** ridicule, sarcasm.
اتمسخر *ʕitmasxar* /vi/ **1** passive of *masxar*. **2** to become derisive, engage in mockery. - ava/iva *mitmasxar*.

م س ر see م س و ر : *masuura*

م س ر ا
مسرى *misra* <Copt> /n/ Misra, the twelfth month of the Coptic year, early August to early September. *fi-mısra tigrı kull' tirɛa ɛisra [prov]* during Misra all the canals flow in sultry weather (rhyme indicating that it is the time of the Nile flooding).

م س ر ى ق
مسريقة *masariiqa* /n/ fatty covering, covering of the intestine.

م س ط ر د see م ص ط ر د

م س س
مسّ *mass' (i)* /vt/ **1** to touch (lightly). **2** to reflect upon, cast aspersions on. *mass' karamt-u* it undermined his dignity. *ʕin ħadd' mass' ţaraf-ak bi-kilma ʕana l-masʕuul* if anyone insinuates anything about you, I'll take care of it. *ma-fii-ʃ ħaaga fit-taqriir timiss-ak* there is nothing in the report that reflects on you. **3** to affect (of a demon, spirit). **4** to apply a (medicated) swab to. *nızıil il-vifaaʕ wi-nmiss il-maţraħ* we remove the membrane and swab the area. — /vi/ **5** to apply a (medicated) swab. *ʕid-duktuur mass" ɛal-ɛeen* the doctor swabbed the eye with medication. - vn *mass, masasaaan*; ava *maasis*; pva *mamsuus*.
مسّ *mass²* /n/ **1** medication applied with a swab to eye or gum infections. **2** treatment of eye or gum infections with medication.
مسّة *massa'* /inst n, pl *-aat*/ a single application of a (medicated) swab.
اتمسّ *ʕitmass* /vi/ passive of *mass'*. - iva *mitmass*.
تماسّ *tamaass* /n/ **1** contiguity. ‖*xaţţ it-tamaass [soccer]* touch-line. **2** *[math]* tangency.

م س ط ر –
مسطرين *masţareen* /n pl *-aat*/ builder's trowel.

م س ق see م س ى ق : *musiiqa, mısiiqi*

م س ق ا ر see also م س ى ق
موسيقار *musiqaar* /n pl *-aat*/ expert musician, maestro.

م س ق ق ع
مسقّعة *misaqqaɛa* /n/ dish whose main ingredients include minced meat and egg-plant, moussaka.

م س ك ¹
مسك *mısik (i)* /vt/ **1** to take hold of, grasp. *mısikt-a-ha min ʕid-ha* I took hold of her by the hand. *ʕis-suxuniyya timsik-ni bil-leel* the fever grips me at night. ‖ *ʕimsik nafs-ak* get a hold on yourself, pull yourself together! - *ʕimsık il-xaſab* touch wood! (i.e. for luck). - *ʕimsik il-ɛaşaaya min in-nuşş* ≈ keep all possibilities open. - *ʕıl-ħagar maasik nafs-u kwayyis* the rock is of solid consistency. **2** to capture, arrest. *misk-u l-buliş* the police arrested him. **3** to take on, be in charge of. *kull' ẓaabiţ fil-markib bi-yimsik wardiyya* each officer on the ship takes a watch. *kull' lagna maska qţaaɛ* each committee is in charge of a sector. *mask' dafaatir* bookkeeping. **4** to harp on, keep on about. *miskuu-lu l-ɤalţa lli ɛamal-ha* they kept reminding him of his mistake. — /vi/ **5** /preverb/ to up and .... *misikt-a-ha ḍarabt-a-ha ɛalqa suxna* I upped and gave her a good thrashing. **6** to stick, adhere, hold. *ʕis-sabɤa b-timsik ţawwaali* the dye sets immediately. *ʕir-riiħa b-timsik fil-huduum* the odour clings to clothing. ‖ *ʕimsık ʃimaal-ak* keep to the left! - *ɛaſaan baţn-a-ha timsik* so that her bowels will firm up. - *ʕil-keef misık fi-dmaaɤ-u* he became addicted. - vn *mask, masakaan*; ava *maasik*; pva *mamsuuk*.
¶ *misik fi-* (1) to invite pressingly, as in *misik fiyya ɛal-ɤada* he insisted on my lunching with him. (2) to pick a quarrel with, as in *ţuul in-nahaar yimsik fi-lli raayiħ wi-lli gaay* he's always picking quarrels with the passers-by.
مسكة *maska* /inst n, pl *-aat*/ a grip, a hold. *ʕil-maska mneen* how does one hold (it)?
اتمسك *ʕitmasak* /vi/ passive of *misik*. - iva *mitmisik*.
مسّك *massik'* /vt/ **1** to cause to take hold of. *massıkuu fanuus* they put a lantern in his hand. **2** to cause to hold, cause to adhere. *ʕamassık kull' ruloteen bi-klibs* I secure each pair of rollers with a hairpin. **3** to charge with, entrust to. *massikt axuu-ya l-maħall* I put my brother in charge of the store. - vn *tamsiik*; ava/pva *mimassik*.
اعسّك *ʕitmassik'* /vi/ **1** passive of *massik*. **2** to insist. *ʕil-muħaami tmassık bi-nuqţa ʕigraʕiyya* the lawyer

clung to a point of procedure. - vn *tamassuk*↑; ava *mutamassik*; ava/iva *mitmassik*.

اتماسك *ʔitmaasik* /vi/ to take hold of oneself. *laazim titmaasik fiwayya* you should be a bit firm with yourself. - vn *tamaasuk*; ava *mitmaasik*, *mutamaasik*↑.

تماسك *tamaasuk*↑ /n/ consistency, cohesiveness.

متماسك *mutamaasik*↑ /adj */ cohesive.

أمسك *ʔamsak* /vi/ *[Isl]* to fast from dawn to sunset in Ramadan. - vn *ʔimsaak*; ava *mumsik*.

إمساك *ʔimsaak* /n/ **1a** abstention. **1b** *[Isl]* time before dawn in Ramadan when Muslims are supposed to stop eating. **2** constipation.

إمساكيّه *ʔimsakiyya* /n/ Ramadan calender giving the times of the five prayers, the *furuuq* and the *ʔimsaak*.

م س ك [2]

مسك *misk* /n/ musk.

مسكه *miska* /coll n/ *[euphem]* cattle dung.

مسّك *massik*[2] /vt/ perfume with musk. ‖*ṣabuun mimassik* scented toilet soap. - ava/pva *mimassik*.

اتمسّك *ʔitmassik*[2] /vi/ to be perfumed with musk. - iva *mitmassik*.

م س ك ن

مسكين *maskiin*, *miskiin* /adj pl *masakiin*/ pitiable, wretched. *da maskiin ma-luu-ʃ ḥadd* he is to be pitied for he has no one. *maskiina - goz-ha maat in-nahar-da* poor woman, her husband died today. *huwwa maskiin fi-ɛaql-u* he's simple-minded.

امسكن *ʔitmaskin* /vi/ **1** to feign humility and submissiveness. *ʔitmaskin lamma titmakkin [prov]* ≈ fawn and beg until you get your chance. **2** to pretend to be pitiable or wretched. - vn *maskana*; ava *mitmaskin*.

(م س ك ى)

موسكى *muski* <poss *Moscow*> /coll n/ type of pitch pine.

الموسكى *ʔil-muski* <poss Fr *mosquée*> /prop n/ street in Cairo running from Ataba to el-Azhar through a market area.

م س ل

مثل *misl* /n/ like thing, peer. *ma-laqet-ʃ misl-ak* I did not find the like of you. *misl zaalik* like this. *bil-misl* similarly, in similar fashion, as in *ʔil-muɛamla bil-misl* tit for tat. *ka-misl* see *ka-*.

مثل *masal* /n pl *ʔamsaal*/ **1** proverb, saying. *ɛala raʃy il-masal* as the proverb says. **2** example, instance. *ʔana mif faahim - ʔiddii-ni masal* I don't understand - give me an example. ‖*masal ʔaɛla* ideal (person).

¶ *masalan* /adv/ for example, for instance.

أمثال *ʔamsaal* /pl n, in constr/ the likes of. *ʔil-quwwaad il-kubaar ʔamṡaal-u* great leaders like him.

مثال *misaal* /n pl *ʔamsila*/ **1** example. *ɛala sabiil il-misaal* by way of example. **2** sign, symbol. *misaal is-saluus* a symbol of the Trinity. **3** like thing, peer. *ma-lhaa-ʃ misaal* there is nothing like it, it is beyond compare. **4** ideal model, exemplar. *misaal lif-fagaaɛa* a model of courage.

مثالى *misaali* /adj */ **1** ideal, exemplary. **2** living in a world of one's own, living in an ivory tower.

مثاليّه *misaliyya* /n/ perfectionism.

مثيل *masiil* /n/ like thing, peer. *ma-lhaa-ʃ masiil* there is nothing like it, it is beyond compare.

أماثل *ʔamaasil*↓ **1** /pl adj/ staunch, reliable. *naas ʔamaasil* solid citizens. **2** /pl n/ fuss, trouble. *kull' yoom yiigi yiɛmil-lu ʔamaasil hina* every day he comes here and creates a scene.

مثّال *massaal*↑ /n */ **1** cast maker. **2** sculptor.

تمثال *timsaal* /n pl *tamasiil*/ statue, statuette. *timsaal niṣfi* bust.

مثّل *massil* /vt/ **1** to act (a role). *bi-tmassil door il-baṭala* she plays the part of the heroine. **2** to represent. *massil il-hayʔa fil-muʔtamar* he represented the organization at the conference. *ʔit-tamsiil id-diblumaasi* diplomatic representation. ‖*badal tamsiil* expense allowance. **3** to depict, portray. *ʔil-ʔalwaan il-ɣamqa bi-tmassil il-ḥuzn* the dark colours represent grief. — /vi/ **4** to act, play-act. *ʔinta ɛayyaan fiɛlan walla bi-tmassil* are you really ill or just putting it on? *tamsiil ṣaamit* mime. - vn *tamsiil*; ava *mimassil*.

تمثيليّه *tamsiliyya* /n pl *-aat*/ drama, play.

ممثّل *mumassil* /n */ **1** actor. **2** representative. *mumassil niyaaba* counsel for the prosecution.

ممثّله *mumassila* /n pl *-aat*/ **1** actress. **2** woman representative.

امثّل *ʔitmassil* /vi/ **1** to be acted, be acted out. **2** to be represented. - iva *mitmassil*.

ماثل *maasil* /vt/ to correspond to. *ʔiṣ-ṣuura bi-tmaasil il-ʔaṣl* the copy corresponds to the original. - vn *mumasla*; ava *mimaasil*.

مماثل *mumaasil* /adj */ analagous, corresponding, similar.

امتثل *ʔimtasal* /vi/ to submit, subject oneself. *kull-i-na mimtisliin li-ʔamr illaah* we all surrender to the will of God. - vn *ʔimtisaal*; ava *mimtisil*.

استمثل *ʔistamtil*↓ /vi/ to submit, acquiesce. *ʔistamtil li-ḥukm illaah* he submitted to God's ruling. - vn *ʔistimtaal*; ava *mistamtil*.

م س ل م see also س ل م
اتمسلم ʔitmaslim /vi/ *[derog]* to become a Muslim, convert to Islam (for reasons of convenience). - ava *mitmaslim*.

م س ل ى ن
موسلين *musiliin* (also *ħariir musiliin*) <Fr *mousseline*> /n/ type of artificial silk.

م س م ر see also [2] س م ر
مسمر *masmar* /vt/ **1** to nail. **2** to quilt-stitch. - vn *masmara*; ava/pva *mimasmar*.
اتمسمر ʔitmasmar /vi/ **1** to be nailed. **2** to be quilt-stitched. - iva *mitmasmar*.

[1] م س ن
مسانة، منانة *masaana* /n/ *[anat]* bladder.

[2] م س ن see س ن : *misaniyya*

[3] م س ن see م س و ن : *masuun, masuuni, ʔil-masuniyya*

م س و ر
ماسورة *masuura* <prob P *mâṣhûra*> /n pl *mawasiir, masuraat*/ **1** pipe, tube. *masuurit farmala* brake cable. *masuurit ik-kabbaas* piston casing, piston shaft. **2** marrow-bone.

م س و ن
ماسون *masuun* /coll n/ Freemasons.
ماسونى *masuuni* **1** pertaining to freemasonry. *maħfal masuuni* masonic lodge. **2** /n/ a Freemason.
الماسونيّة ʔil-masuniyya /n/ freemasonry.

م س ى
مساء *misa* or *masa, misaaʕˀ* or *masaaʕˀ* /n/ evening. *misa l-xeer* (or *masaaʕ il-xeer* etc., or *sa l-xeer*) good evening! good afternoon! ‖*miit misa* and *misa s-suṭal* greeting used between hashish-smokers.
¶ *misaaʕan* or *masaaʕan* /adv/ in the evening, in the afternoon. *ʔis-saaɛa sitta masaaʕan* six o'clock in the afternoon.
مسائى *misaaʕi* or *masaaʕi* /adj */ pertaining to the evening. *duruus masaʕiyya* evening classes.
أمسيّة ʔumsiyyaˀ /n/ soirée, evening gathering.
مسّى *massa*[2] /vt/ **1** to cause to spend the evening (of God). *ʔallaah yimassii-k bil-xeer* God grant you a good evening! **2** to deal with (s.o.) in the evening. *massaa-ni b-ɛalqa* he wound up my day for me with a beating. ‖*la ṭṣabbaħ-u wala tmassii* ≈ keep well away from him! - /vi/ **3** to spend the evening. *ṣabaħna f-ɛaknana w-masseena f-xinaaqa* we started the day in irritation and ended it in a quarrel. **4** to say good evening. - vn *tamsiyya*; ava/pva *mimassi*.
تمسيّة *tamsiyya* /n pl *tamaasi*/ evening greeting. *masaaʕ it-tamaasi [joc]* the best of good evenings to you!
اتمسّى ʔitmassa /vi/ **1** passive of *massa*[2] 1 and 2. **2** to be late in the evening. *ʔitmasseena qawi ɛala ma qafalna d-dukkaan leelit ʔimbaariħ* we were very late in closing the shop last night. - ava/iva *mitmassi*.

م س ى ق
موسيقى *musiiqaˀ* <Gr> /n/ music.
موسيقى *musiiqiˀ* **1** /adj/ musical. *ʔalaat musiqiyya* musical instruments. **2** /n */ musician. see further under م س ق ا ر

م س ى و
مسيو *misyu* <perh Fr *monsieur*> /n/ informal term of address to a male or (occasionally) a female foreigner.

م ش
مش *miʃ, muʃ* /part/ not. *miʃ kida* (1) not like that. (2) isn't that so? *da miʃ mumkin* that's impossible. *miʃ ħ-aqul-lak* I shan't tell you.

– م ش ت ش see [1] ش ف ى : *muʃtaʃʃa, miʃtaʃʃa*

م ش د ق
اتمشدق ʔitmaʃdaq /vi/ **1** *[deris]* to chew. *ṭuul in-nahaar titmaʃdaq bil-libaan* all day long she chews gum. **2**ˀ to repeat erudite words senselessly. - also *ʔitʃaddaq*. - vn *maʃdaqa*; ava/pva *mitmaʃdaq*.

م ش ش
مش *miʃʃ* /n/ seasoned milk-based liquid culture in which cheese is fermented for about two years, the final product consisting of lumps of fermented cheese in a thick liquid. *miʃʃ' daayir* fully thickened and matured *miʃʃ*. ‖*zayy il-miʃʃ - kull' saaɛa fil-wiʃʃ [prov]* like *miʃʃ*, it's always around (said of something boringly familiar). - *zayy' duud il-miʃʃ' minnu fii [prov]* ≈ rot begins from within.
مشّش *maʃʃiʃ* /vi/ to become rotten, decay. *ʔil-beeq maʃʃiʃ min il-ħarr* the eggs have gone off because of the heat. - vn *tamʃiiʃ*; ava *mimaʃʃiʃ*.

م ش ط
مشط *miʃṭ* /n pl *miʃaaṭ, ʔamʃaaṭ, miʃṭa*/ **1** comb.

‖*kabriit miʃṭ* book matches. -*miʃṭ*^{i} *kabriit* a book of matches. -*furfa miʃṭ* flat paint brush. -*faara miʃṭ [carp]* roughening plane. -*miʃṭ*^{i} *musaddas* cartridge clip. -*daxal fi-miʃṭ-i* I became fond of him. **2** ball of the foot. ‖ *ʕiddaa-lu miʃṭ* he tripped him up. **3** (also *miʃṭ*^{i} *samak*) a fish (usually of the perch type).

ماشطة *maʃṭa* /n/ woman employed to make up and prepare a bride. *ʕeef tiʕmil il-maʃṭa fil-wiʃʃ il-ʕikir [prov]* ≈ you can't make a silk purse out of a sow's ear.

مشّط *maʃʃaṭ* /vt/ **1** to comb, card. **2** to rake. -vn *tamʃiiṭ*; ava/pva *mimaʃʃaṭ*.

اتمشّط *ʕitmaʃʃaṭ* /vi/ **1** to be combed, be carded. **2** to be raked. -iva *mitmaʃʃaṭ*.

م ش ك ح

مشكاح *miʃkaaḥ* given name used in proverbs (in combination with the equivalent female name *riima* (q.v.)) to signify a good-for-nothing man.

مسكح *maʃkaḥ* /vi/ to idle about, loaf around. *qaaʕid yimaʃkaḥ fiʃ-ʃaariʕ - la ʃuɤla wala maʃɤala* he hangs about the street without a job of work or anything to do. -vn *maʃkaḥa*; ava *mimaʃkaḥ*.

اتمسكح *ʕitmaʃkaḥ* = *maʃkaḥ*. -ava *mitmaʃkaḥ*.

م ش م see ش ى م : *maʃiima*

م ش م ش

مشمش *miʃmiʃ* /coll n/ apricot(s). ‖*fil-miʃmiʃ* ≈ that'll be the day, I should live so long! as in *ḥa-ygib-li l-fuluus bukra.* - *ʕil-kalaam da fil-miʃmiʃ* 'He'll bring me the money tomorrow.' 'That'll be the day!' -*bukra fil-miʃmiʃ* when pigs fly.

مشمشة *miʃmiʃa* /unit n, pl -*aat*/ an apricot.

مشمشاية *miʃmiʃaaya* = *miʃmiʃa*.

مشمشي *miʃmiʃi* /adj invar/ apricot-coloured.

مشمشيّة *miʃmiʃiyya* /n/ **1** dried apricots. **2** fruit compote of stewed dried apricots (sometimes including currants and nuts).

م ش ن ن

مشنّة *miʃanna* <perh Copt> /n pl -*aat*/ large shallow basket made of withies (see Pl.B, 9).

م ش و ر

مشوار *miʃwaar* /n pl *maʃawiir*/ **1** errand. *ruḥna miʃwarna* we went on our errand. **2** distance. *huwwa msaafir wi-miʃwaar-u ṭawiil* he is travelling a long distance. *ṭaxx*^{i} *miʃwaar* see *ṭaxx*.

مشور *maʃwar* **1** /vt/ to send on (numerous or long) errands, cause (s.o.) to go a long way. **2** /vi/ to go on numerous errands. -vn *maʃwara*; ava/pva *mimaʃwar*.

اتشور *ʕitmaʃwar* /vi/ to be sent a long way or on long errands. -iva *mitmaʃwar*.

م ش ى [1]

مشى *miʃi (i)* /vi/ **1** to walk. *geet maaʃi* I came on foot. **2** to go, move away. *ḥa-timʃi wi-tsib-ni zaʕlaan kida* are you going to go and leave me upset like this? *ʕimʃi* shoo! away with you! get out! **3** to move, move along. *ʕil-ʕutubiis kaan maaʃi b-surʕa* the bus was moving fast. *maaʃi bil-koora* he's dribbling the ball. ‖*ʕala l-maaʃi* cursorily, as in *ḥ-aakul ʕal-maaʃi* I'll grab a bite to eat. **4** to proceed. *kull-u maaʃi tamaam* everything's going well. *kunt*^{i} *maaʃi fil-ʕaaya w-baʕdeen sibt*^{i} *kilma* I was going along (reciting) the verse and then I skipped a word. *kilma minnak wi-bass*^{i} *w-kull-u yimʃi* one word from you would get things moving. *ʕid-dinya ma-b-timʃii-ʃ ʕilla b-kida* ≈ that's the way the world goes round. ‖*kalaam-u maaʃi* what he says goes. -*ʕalla-kilmit xaddaam timʃi ʕala kilmit ʕaxuu-k* what's this! the word of a servant overrules that of your brother? -*maʃayaan il-baṭn* diarrhoea. -*baṭn-i maʃya* I have diarrhoea. -*ma-timʃii-ʃ wara baṭn-ak* ≈ don't eat everything you feel like eating. **5** to conduct oneself, behave. *bi-yiigu maṣr*^{i} *w-ma-yiʕrafuu-ʃ yimʃu xaaliṣ* they come to Cairo and they haven't any idea how to behave. **6** to function. *ʕig-gihaaz ma-b-yimʃii-ʃ maẓbuuṭ* the equipment doesn't work properly. *ḥa-yʕassar ʕala maʃyit is-saaʕa* it will affect the working of the watch. -vn *maʃy, maʃayaan*; ava *maaʃi*.

مشية *maʃya* /n pl -*aat*/ **1** instance noun of *maʃy*. **2** manner of walking, gait.

ماشى *maaʃi* /interj/ O.K., all right. *ḥa-nʃuuf-ak hina bukra.* - *maaʃi* 'We'll see you here tomorrow.' 'All right.'

ماشية *maaʃiya*↑ /coll n, pl *mawaaʃi*/ cattle.

مشاة *muʃaah* /pl n/ **1** infantry. **2** pedestrians.

مشّاية *maʃʃaaya* /n pl -*aat*/ **1** walkway, path. **2** long narrow carpet for a corridor, runner. **3a** baby-walker. **3b** child's scooter.

ممشى *mamʃa* /n pl *mamaaʃi*/ **1** path. **2** *[naut]* gangway, gangplank.

مشّى *maʃʃa* /vt/ to cause to walk, cause to move, cause to go etc. *bi-nmaʃʃi fiiha mayya* we let water pass through it. *di mumkin timaʃʃi ʃ-ʃuɤl* this may get the work moving. ‖*maʃʃa kalaam-(u)* to have one's own way. -*maʃʃa ḥaal-(u)* (1) to look out for oneself, promote one's own interests. (2) to get moving, get a move on. -vn *tamʃiyya*; ava/pva *mimaʃʃi*.

اتمشّى ʔitmaffa /vi/ **1** passive of *maffa*. **2** to walk, go for a walk, stroll. *ʕala baal ma ʔatmaffa l-ʏaayit il-madrasa tkuun baʔit sabʕa* by the time I've walked to school, it'll be seven. ‖*nitmaffa maʕa t-tilmiz ʕala ʔadd' ʔidraak-u* we go along with the student keeping step with his level of comprehension. **3a** to defecate (particularly after a spell of constipation). **3b** to have diarrhoea. - vn *tamfiyya*; ava/iva *mitmaffi*.

تمشيّة *tamfiyya* /n pl *-aat*/ stool.

اتماشى ʔitmaafaʕ /vi/ to get along with, agree with. *laazim nitmaafa maʕa g-gaww* ≈ we have to go along with the tide. - ava *mitmaafi*.

م ش ى [2] see م ا ش : *maafa*

م ص ت ك see م س ت ك

م ص ر [1]

مصر *maṣr* /fem prop n/ **1** Egypt. *maṣr' ʔumm id-dunya [prov]* Egypt is the cradle of civilization ≈ Egypt is the best place on earth. **2** Cairo. ‖*maṣr ig-gidiida* Heliopolis, a suburb north-east of Cairo. - *maṣr il-ʔadiima* Old Cairo, an area of southern Cairo east of the Nile. - *ʔibn' maṣr* a Cairene (usually with implications of polish, politeness and sophistication).

مصرى *maṣri* **1** /adj */ Egyptian. ‖*hawa maṣri* north wind. **2** /n */ an Egyptian. **3** /n no pl/ drum rhythm (in the *zaar*).

مصراوى *masraawiʕ* /adj and pl *-yya*/ Cairene (of people, with the implication of sophistication).

مصّر *maṣṣar* /vt/ to Egyptianize. - vn *tamṣiir*; ava/pva *mimaṣṣar*.

اتمصّر ʔitmaṣṣar /vi/ **1** to be Egyptianized. **2** to take Egyptian nationality. - ava/iva *mitmaṣṣar*.

م ص ر [2]

مصران *muṣraan* **1** /n pl *maṣariin*/ intestine. *ʔil-muṣraan il-ʕaʕwar* the appendix. *ʔil-muṣraan il-ʏaliiʐ* the colon. **2** *maṣariin* /pl n/ intestines, entrails, bowels. ‖*ʈallaʕ maṣariin-(u)* to give (s.o.) a bad time.

م ص ص [1]

مصّ *maṣṣ (u)* /vt/ **1** to suck. *bi-ymuṣṣ' ṣbaaʕ-u* he sucks his thumb. *ʕaʕdiin yimuṣṣu ʕaṣab* sitting sucking the juice out of sugar cane. ‖*maṣṣ ... (zayy il-)lamuuna* to take all there is to get (from s.o. or s.th.). **2** to absorb (liquid). *ʔil-fanilla bi-tmuṣṣ il-ʕaraʕ* the undershirt absorbs sweat. **3** to emaciate, enervate (of an illness etc.). - vn *maṣṣ, maṣaṣàan*; ava *maaṣiṣ*; pva *mamṣuuṣ*.

مصّة *maṣṣa* /inst n, pl *-aat*/ a suck.

مصاصة *miṣaaṣa* /coll n/ that which remains after juice or sap has been extracted. *miṣaaṣit il-ʕaṣab bi-tidxul fi-ṣnaaʕit il-xafab il-ħubaybi* sugar-cane fibre is used in the manufacture of chipboard.

مصّاصة *maṣṣaaṣa* /n pl *-aat*/ sucker, lollipop.

اتمصّ ʔitmaṣṣ /vi/ passive of *maṣṣ*. - iva *mitmaṣṣ*.

مصّص *maṣṣaṣ* /vt/ to give to suck. *maṣṣaṣit-u lamuuna ʕafaan ma-yistafraʏ-ʃ* she made him suck a lemon so he would not vomit. - vn *tamṣiiṣ*; ava/pva *mimaṣṣaṣ*.

اتمصّص ʔitmaṣṣaṣ /vi/ to be given to suck. - iva *mitmaṣṣaṣ*.

امتصّ ʔimtaṣṣ /vt/ to absorb. *ʔaħuṭṭ' raml[a] ʕafaan yimtaṣṣ iz-zeet* I put down sand to absorb the oil. ‖*ʔimtaṣṣ' ʏaḍab il-gamahiir* he neutralized the anger of the people. - vn *ʔimtiṣaaṣ*; ava *mimtaṣṣ*.

م ص ص [2]

مصّيص *maṣṣiiṣ* /n/ plaster of Paris.

م ص ط ب

مصطبة *maṣṭaba* /n pl *maṣaaṭib*/ **1** bench of mud, brick or concrete built up against the wall of a building. **2** *[agric]* ridge between two furrows. **3** *[naut]* gridiron, cradle. **4** mastaba, stone tomb (ancient Egyptian).

م ص ط ر د

مسطردة، مصطردة *muṣṭarda* <It *mostarda*> /n/ mustard.

م ص ط ك see م س ت ك

م ص ل

مصل *maṣl* /n pl *ʔamṣaal*/ vaccine, serum.

م ص م ص

مصمص *maṣmaṣ* /vt/ **1** to chew and suck on. *ʔil-kalb' kaan bi-ymaṣmaṣ (f)il-ʕaḍma* the dog was chewing on the bone. *maṣmaṣ ʃafayf-u* he sucked his lips. **2** to rinse out, swill. - vn *maṣmaṣa*; ava/pva *mimaṣmaṣ*.

اتمصمص ʔitmaṣmaṣ /vi/ **1** to be chewed and sucked on. **2** to be rinsed out. - iva *mitmaṣmaṣ*.

م ص و ع see also ص و ع

مصوع *maṣwaʕ* /vi/ to loaf about, bum around. - vn *maṣwaʕa*; ava *mimaṣwaʕ*.

اتصوع ʔitmaṣwaʕ = *maṣwaʕ*. - ava *mitmaṣwaʕ*.

م ض ر ب – see م ط ر ب – : *maḍrabiiṭa*

م ض غ see ن د غ : *maḍaʏ, maḍʏa, ʔitmaḍaʏ*

م ض م ض

مضمض *maḍmaḍ* /vt/ to rinse (one's mouth), swill water around in (the mouth). - vn *maḍmaḍa*; ava/iva *mimaḍmaḍ*.

مضمضه *maḍmaḍa* /n/ mouthwash.

اتمضمض *ʔitmaḍmaḍ* /vi/ to rinse one's mouth, swill water in the mouth. - ava *mitmaḍmaḍ*.

م ض ى [1]

مضى *maḍa*[1] *(i)* /vi/ **1** to sign one's name. *laazim timḍi ʕal-ʔistimaara* you have to sign the form. *maḍa ʕalee bil-miwafqa* he signed his consent on it. — /vt/ **2** to sign. *ʔimḍi-sm-ak ʔinta mif'ism*[i] *mraat-ak* you sign your own name, not your wife's. *waraqa maḍii-ha ra'ʔiis il-qism* a paper signed by the department chairman. **3** *[slang]* to put (hashish) on the tobacco (when preparing a water-pipe). - vn *ʔimḍa*; ava *maaḍi*; pva *mamḍi*.

إمضاء *ʔimḍa* /n pl *ʔimḍaʔaat*/ signature.

اتمضى *ʔitmaḍa* /vi/ to be signed. - iva *mitmiḍi*.

مضّى *maḍḍa*[1] /vt/ **1** to cause (s.o.) to sign his name. *bi-yruuḥ lil-muddaʕa ʕalee wi-ymaḍḍii ʕala l-ʔaṣl* he goes to the defendant and makes him sign the original. **2** to cause to be signed. *xud il-waraqa di maḍḍii-ha minnu* take this paper and get it signed by him. - vn *tamḍiyya*; ava/pva *mimaḍḍi*.

اتمضّى *ʔitmaḍḍa*[1] /vi/ to be made to sign one's name. - iva *mitmaḍḍi*.

م ض ى [2]

مضى *maḍa*[2] *(i)* /vi/ to pass, become part of the past. *kull*[i] *fee'ʔ faat wi-maḍa* everything is over and done with. - vn *maḍayaan*; ava *maaḍi*.

ماضى *maaḍi* **1** /adj */ *[gram]* past. *fiʕl*[i] *maaḍi* past tense verb. **2** /n/ *ʔil-maaḍi* **2a** the past. *fil-maaḍi* in the past. **2b** parts already memorized (in Koranic study).

مضّى *maḍḍa*[2] /vt/ to pass, spend (time). *zimil-na bi-ymaḍḍi kull*[i] *waqt-u fil-qahwa* our colleague spends all his time in the coffee shop. - vn *tamḍiyya*; ava/pva *mimaḍḍi*.

اتمضّى *ʔitmaḍḍa*[2] /vi/ to be passed, be spent (of time). *ʔil-ʔagaaza tmaḍḍit fi-ʕazaab* the holiday was passed in anguish. - iva *mitmaḍḍi*.

م ط ر

مطر *maṭar* /n/ rain.

مطره *maṭara* /n/ rain. - also *naṭara*.

مطّر *maṭṭar* /vi/ to rain. *ʔid-dinya* (or *ʔil-maṭara*) *maṭṭarit* it rained. *ʔid-dinya* (or *ʔil-maṭara*) *bi-tmaṭṭar* it is raining. - also *naṭṭar*. - vn *tamṭiir*; ava *mimaṭṭar*.

م ط ر ا ن

مطران *muṭraan* <Syr> /n pl *maṭarna*/ *[Chr]* metropolitan.

مطرانيّة *muṭraniyya* /n/ *[Chr]* **1** area of a metropolitan's jurisdiction. **2** residence and administrative centre of a metropolitan.

م ط ر ب –

مطربيطة *maṭrabiiṭa* (also *maḍrabiiṭa*) <It *madrevita*> /n pl *-aat*/ *[mech]* large thread-cutting stock and die.

م ط ط [1]

مطّ *maṭṭ*[1] *(u)* **1** /vt/ to stretch, pull out. ‖*maṭṭ*[i] *ʃafayf-u* he smacked his lips. **2** /vi/ to stretch. *ʔil-ʔastik maṭṭ* the elastic has stretched. - vn *maṭṭ*, *maṭaṭaan*; ava *maaṭiṭ*; pva *mamṭuuṭ*.

مطّه *maṭṭa* /inst n, pl *-aat*/ a stretching.

مطّاط *maṭṭaaṭ* **1**↑ /n/ rubber. **2** /adj/ rubbery, elastic.

مطّاطى *maṭṭaaṭi*↑ /adj/ of or pertaining to rubber. *ḥizaam maṭṭaaṭi* a rubber belt.

اتمطّ *ʔitmaṭṭ* /vi/ to stretch or be stretched. - ava/iva *mitmaṭṭ*.

مطّط *maṭṭaṭ* /vt/ to stretch out. ‖*maṭṭaṭ ʃafayf-(u)* to grimace in disagreement. - vn *tamṭiiṭ*; ava/pva *mimaṭṭaṭ*.

تمطيط *tamṭiiṭa* instance noun of *tamṭiiṭ*. ‖*nooma w-tamṭiiṭa ʃaḥsan min faraḥ ṭiiṭa [prov]* a sleep and a stretch-out (at home) are better than (pointless) party-going.

اتمطّط *ʔitmaṭṭaṭ* /vi/ **1** to be stretched out. **2** to stretch oneself. *ʔil-qiṭṭa qaʕda titmaṭṭaṭ wi-tiftaḥ buqq-a-ha* the cat is stretching and yawning. - ava/iva *mitmaṭṭaṭ*.

م ط ط [2]

مطّ *maṭṭ*[2] <prob Fr> /adj invar/ matt, dull (in colour). *zeet il-maṭṭ* oil used in applying a matt finish.

م ط ع

تمطيعه *tamṭiiʕa* /n/ stretching and yawning.

اتمطّع *ʔitmaṭṭaʕ* /vi/ to stretch oneself. - ava *mitmaṭṭaʕ*.

م ط ل

ماطل *maaṭil* (also *maaliṭ*[↓]) /vt/ to put off with fake excuses, prevaricate with. *baqu ymaṭluu-ni fil-ʔugra* they started stalling with the rent. - vn *mimaṭla*; ava *mimaaṭil*.

م ط ن ى

مطانية *maṭanya* <Gk *metanoia*> /n/ *[Chr]* prostration. *ʔiḍrab-lu maṭanya* bow down to the ground before him.

م ط و see ط و ى : *maṭwa*

م ط و ل
مطول *maṭwil* /vi/ to prevaricate, be evasive (particularly in paying one's debts). - vn *maṭwala*; ava *mimaṭwil*.

م ط ى
مطيّة *maṭiyya* /n pl *maṭaaya*/ mount (usually a donkey). ‖*ʕamlin-ni maṭiyyit-hum* ≈ they are using me as a door-mat.

م ع
مع *maʕa* /w pron suff *maʕaa-*; 1st sing *maʕaaya*/ preposition indicating **1** accompaniment. *ʔitfaḍḍalu maʕaana* please come with us. *maʕaahum waḥda sitt* there's a woman with them. *maʕaak it-tazkara* do you have the ticket with you? *ma-maʕii-ʃ fakka* I haven't any change on me. *ʔana mabsuuṭ maʕaakum* I'm happy to be (e.g., living or working) with you. ‖*xallii-k maʕa llaah* ≈ place your trust in God. - *maʕa zaalik* in spite of that. **2** concurrence of direction. *law ʔinta maaʃi maʕa t-tirʕa yibqa bet-na ʕala ʃmaal-ak* if you're walking in the same direction as the flow of the canal, our house is on your left. **3** concurrence of action. *bi-tifṣil maʕa surʕit il-mutoor* it disconnects as the motor picks up speed. *maʕa l-waqt* with the passage of time. **4** agreement or support. *ʔana maʕaak* (1) I agree with you. (2) I'm on your side. ‖*maʕaahum maʕaahum ʕaleehum ʕaleehum* when things are going for them he's with them, when things turn against them so does he (of one who has no mind of his own). **5** interaction. *ʔittafaqt' maʕa g-giraan* I came to an agreement with the neighbours. *zirʕlit maʕa goz-ha w-sabit-u* she had a row with her husband and left him. *zaʕlaniin maʕa baʕḍ* on bad terms with each other.
¶ *maʕa ʔinn* /conj/ although, in spite of the fact that.

م ع ج ن see also ع ج ن
معجن *maʕgin* /vt/ to fill and smooth over (holes in a surface), dress (a surface preparatory to painting etc.). *ma-maʕgint'-ʃ il-ḥeeṭa kwayyis qabl' ma bayyaḍt-a-ha* you didn't dress the wall properly before painting it. - vn *maʕgana*; ava/pva *mimaʕgin*.
اتعجن *ʔitmaʕgin* /vi/ passive of *maʕgin*. - iva *mitmaʕgin*.

[1] م ع د
معدة *miʕda* /n/ stomach. *fumm il-miʕda* epigastrium. ‖*kalaam-i miʃ ʕala l-miʕda* people can't stomach what I say.

معدى *maʕidiʔ* /adj/ pertaining to the stomach.

[2] م ع د see و ع د : *maʕaad, miʕaad*

م ع د ن see [1] ع د ن

م ع ر
معر *maʕar (u)* /vi/ to brag, boast of one's exploits. - vn *maʕr*.
معرة *maʕra* /pl *-aat*/ instance noun of *maʕr*.
معّار *maʕʕaar* /n/ idle boaster.

م ع ز
معزة *miʕza* /n pl *-aat, miʕiiz, miʕaz*/ **1** (nanny) goat. **2** coward.

م ع ص ر – see [1] ع ص ر : *maʕṣaraawi*

م ع ظ م see also ع ظ م
اتعظم *ʔitmaʕẓam* /vi/ **1** *[iron]* to do great things, perform great feats. *ʔitmaʕẓam wi-gaab nuṣṣ' kiilu ruzz* he performed the great feat of bringing half a kilo of rice. **2** to be stuck up or pompous. - ava *mitmaʕẓam*.

م ع ل ش ش
معلهش *maʕaliff, maʕalihʃ, maʕaliffi, maʕaleeʃ* /interj/ **1** never mind, don't worry about it. **2** sorry! excuse me!

م ع م ع
معمعة *maʕmaʕa* /n/ turmoil, thick of things.

م ع ن
ماعون *maʕuun* /n, dual *maʕunteen*, pl *mawaʕiin*/ **1** kitchen pot. ‖*da min maʕuun baṭṭaal* he comes of bad stock. **2** *mawaʕiin* /pl n/ pots and pans, kitchen utensils in general.

م ع ى
أمعاء *ʔamʕa, ʔamʕaaʔ* /pl n/ intestines.
معوى *maʕawi* /adj/ pertaining to the intestines, intestinal. *nazla maʕawiyya* intestinal infection.

م غ ت
مغات *muɣaat* or *muɣaat* /n/ **1** roots of Glossostemon brugieri. **2** an infusion of the same (traditionally drunk by recently delivered mothers and their visiting well-wishers).

م غ ص
مغص *maɣaṣ' (u)* /vi/ to be afflicted with cramps or colic

(of the stomach or kidneys). *baṭn-i b-tumʏuṣ (ɛalayya)* I've got a stomach-ache. - vn *maʏaṣ, maʏaṣaan*; ava *maʏṣaan*.
مغص *maʏaṣ*[2] /n/ colic, stomach cramps. ‖ *maʏaṣ kalawi* renal colic.
مغصة *maʏṣa* /n pl *-aat*/ an attack of colic.
مغّص *maʏʏaṣ* **1** /vi/ to be affected by (severe) colic. *lamma baṭn-u maʏʏaṣit raaḥ bi-surɛa lid-duktoor* when he got severe stomach cramps he went quickly to the doctor. **2** /vt/ to make colicky. - vn *tamʏiiṣ*; ava/pva *mimaʏʏaṣ*.
اتمغّص *ʔitmaʏʏaṣ* /vi/ to be made colicky. - iva *mitmaʏʏaṣ*.

م غ ن ط see also - م غ ن ط
مغنط *maʏnaṭ* /vt/ to magnetize. - vn *maʏnaṭa*; ava/pva *mimaʏnaṭ*.
اتمغنط *ʔitmaʏnaṭ* /vi/ to be magnetized. - iva *mitmaʏnaṭ*.

- م غ ن ط
مغنطيس *maʏnaṭiis* (also *maʏmaṭiis*) <Gr *magnêtês*> /n/ magnet.
مغنطيسي *maʏnaṭiisi* /adj/ magnetic. ‖ *ʔit-tanwiim il-maʏnaṭiisi* hypnosis. see further under م غ ن ط

[1] م ق ت
مقت *maqat ʔu)* /vt/ to cause (health or a general situation) to deteriorate. - vn *maqt, maqataan*; ava *maaqit*; pva *mamquut*.
مقت *maqt* /n/ hatred.
مقتة *maqta* /n/ gloominess, moodiness.
اتمقت *ʔitmaqat* /vi/ passive of *maqat*. - iva *mitmiqit*.

[2] م ق ت see و ق ت : *miqaat, miqaati*

- م ق د و see - ب ق د و : *maqduunis*

م ق ق
مقّق *maqqiq* **1** /vt/ to strain (the eyes). ‖ *maqqiq ɛenee-na min kutr il-intiẓaar* he made us wait for him a hell of a long time. **2** /vi/ to pore (over s.th.), give close attention (to s.th. written). *ʔinta bi-tmaqqiq fig-gawaab leeh* why are you scrutinizing the letter? - vn *tamqiiq*; ava/pva *mimaqqiq*.
تقيقة *tamqiiqa* /pl *-aat*/ instance noun of *tamqiiq*.
اتقّق *ʔitmaqqiq* /vi/ to be or become strained (of the eyes). - ava/iva *mitmaqqiq*.

م ق ل see [1] ق ل ى : *maqla, miqla*

م ك ء ى ل
ميكائيل *mikaʔiil* (also *miikaaʔiil*) /prop n/ **1** male given name. **2** the archangel Michael.

م ك ت ت
ماكيت *makitt* <Fr *maquette*> /n pl *-aat*/ *[print]* dummy lay-out.
ماكيتّة *makitta* = *makitt*.

م ك ر
مكر *makar (u)* /vi/ to act with deceit. *xalli baal-ak minnu la-yumkur ɛaleek* (or *biik*) be careful lest he take you in. - vn *makr*; ava *maakir*.
مكرة *makra* /inst n, pl *-aat*/ a deceitful trick.
مكّار *makkaar* /adj */ cunning, deceitful, sly.
أمكر *ʔamkar* /el/ more/most cunning, deceitful or sly.
اتمكر *ʔitmakar* /vi/ (impersonal) passive of *makar*. *laazim itmakar ɛaleek* you must have been taken in. - iva *mitmikir*.

- م ك ر ف
مكرفون *mikrufoon, makrafoon* <Fr> /n pl *-aat*/ **1** microphone. **2a** loudspeaker system. *ṣoot-u ɛaamil wala l-mikrufoon* his voice blares more than a loudspeaker. **2b** loudspeaker (e.g., of a radio).

م ك ر و ب
مكروب *mikroob, makroob* <Fr *microbe*> /coll n, pl *-aat*/ germ(s), microbe(s).

م ك ر و ن
مكرونه *makaroona* <It *maccheroni*> /n/ pasta. ‖ *makaroona xawaatim* (or *maqṣuuṣa*) macaroni.

م ك س ى ك
المكسيك *ʔil-maksiik* <Fr> /prop n/ Mexico.
مكسيكى *maksiiki* **1** /adj */ Mexican. **2** /n */ a Mexican.

[1] م ك ك
مكّة *makka* /prop n/ Mecca.
مكّى *makki* /adj/ pertaining to Mecca. *ʔil-ḥaram il-makki* (1) area around Mecca considered sacred. (2) the Kaaba Mosque.

[2] م ك ك
مكّوك *makkuuk* /n pl *makakiik, makaaki*/ **1** *[text]* shuttle. ‖ *ɛaamil zayy il-makkuuk* he rushes to and fro. **2** bobbin (of a sewing machine). ‖ *ʔiriiṭ makkuuk* gathering tape (for curtains).

م ك ن [1]

مكن *mukn↓* /adj invar/ solid (of quality), sound. *raagil mukn* a sterling fellow. *ʕakla mukn* a great meal. *ɛalɑa mukn* a sound beating.

مكّن *makkin* /vt/ to enable, give (s.o.) the upper hand. *makkin-ni ʕaxrug* he enabled me to go out. *ṣaaḥib zayy' ma-nta ɛaayiz bass' ma-tmakkin-ʃ' ḥadd' minnak* make friends as you wish, but don't let anyone get a hold on you. ‖*makkinit-u min nafs-a-ha* she gave herself to him. - vn *tamkiin*; ava/pva *mimakkin*.

اتمكّن *ʕitmakkin* /vi/ to be enabled, manage to gain supremacy. *ʕitmakkin bi-makr-u min ɣiff-a-ha* he was enabled by his cunning to cheat her. *ʕitmaskin li-ɣaayit ma titmakkin [prov]* ≈ fawn and beg until you get your chance. - vn *tamakkun↑*; ava *mitmakkan*.

أمكن *ʕamkan (yimkın)* **1** /vt/ it was (is) possible for. *ma-yimkin-haa-ʃ tiftiri waaḥid gidiid* it isn't possible for her to buy a new one. *yimkin-ni ʕanaam* is it possible for me to sleep? **2** /vi/ it was (is) possible. *ʕiza ʕamkan* if possible. *yimkin miraat-u b-tifrab sagaayir* perhaps his wife smokes. *huwwa yimkin taɛbaan* perhaps he's sick. - vn *ʕimkaan*; ava *mumkin*.

إمكان *ʕimkaan↑* /n/ **1** capability, power. *ʕiɛmil kull illi f-ʕimkaan-ak* do all that is in your power. **2** possibility.

إمكانيّة *ʕimkaniyya* /n pl *-aat*/ **1** capability. *di ṣaɛba fooq ʕimkaniyyit if-fubbaan* this is too difficult for the young. **2↑** possibility. — *ʕimkaniyyaat* /pl n/ **3** facilities. *ʕis-sinima l-maṣriyya taɛbaana ɛaʃaan ma-fii-ʃ ʕimkaniyyaat* Egyptian cinema suffers because there are no facilities.

ممكن *mumkin* **1** /adj/ possible. *kull iṭ-ṭuruq il-mumkina* all possible ways. **2** modal of possibility. *miʃ mumkin tiigi n-nahar-da* she cannot come today. *mumkin tiddii-ni fikra ɛanha* can you give me an idea of it?

م ك ن [2]

مكنه *makana* <It *macchina*> /unit n, pl *-aat*/ **1** machine, instrument. *makanit xiyaaṭa* sewing machine. *makanit (ḥilaaqa)* safety razor. ‖*katab ɛal-makana* to type. - *makana ɛarabi* an Arabic typewriter. **2** power-driven machine. *makanit in-nasiig* power loom. *makanit mayya* powered water-pump. *makanit markib* ship's engine.

مكن *makan* /coll n/ mechanical instruments, machines, machinery.

ماكينه *makına* /n pl *-aat*/ machine, machinery. *ɛaamil makinaat iṭ-ṭuruq* road-machinery operator.

م ك ن [3] see ك و ن : *makaan*

(م ك ن ى -)

ميكانيكى *mikanıkı* <It *meccanico*> **1** /adj/ mechanical, mechanized. ‖*muʃaah mikanıkiyya* armoured troops. **2** /n pl *-yya*/ mechanic, technician. *mikaniiki ɛarabiyyaat* car mechanic.

ميكانيست *mikaniist* <Fr *mécanıste*> /n/ *[theat]* technical director.

م ك ى ا ج

مكياج *mikyaaj* or *makyaaj* <Fr *maquillage*> /n/ make-up, cosmetics. *ḥaṭṭıt mıkyaaj* she put on make-up.

م ك ى ى ر

ماكيير *makyiir* <Fr *maquilleur*> /n pl *-aat*/ make-up man.

م ل ا

ملا *mala[1]: ɛala mala wiʃʃ(-u)* hurriedly and under constraint. *lamma smiɛt' ʕinn iʃ-ʃaqqa nḥaraqit geet gary[a] ɛala mala wiʃʃ-i* when I heard that the flat was on fire, I rushed off just as I was. *ga l-ɛaskarı xad-u l-qism[a] ɛala mala wiʃʃ-u* the policeman came and bundled him off to the station.

م ل ا ن

ملانه *malaana* /coll n/ green chick-pea(s).

م ل ء see م ل ى

م ل ب ن see ل ب ن : *malban*

م ل ت و ف

مولوتوف *mulutoof: qumbula mulutoof* Molotov cocktail.

م ل ت و ن

ملتون *mılıtoon* <Fr *molleton*> /n/ table felt.

م ل ح

ملح *malḥ* /n/ **1** salt. ‖*malḥ ıngiliizi* Epsom salts. - *ɛeeʃ wi-malḥ* true friendship (reference to the sharing of a meal being a sign of true friendship). - *tiruʃʃ il-malḥ' ma-yinzil-ʃ* (the place is so crowded) if you threw salt it wouldn't land. - *zayy il-malḥ' maḥʃuriin fi-kull' feeʕ* ≈ poking their noses into everything. - *ḥuṭṭ' ʃ-ɛeen-ak ḥaṣwaayit malḥ* ≈ have some shame! **2** *[rur]* chemical fertilizer. — /pl *ʕamlaaḥ*/ **3↑** mineral salt.

ملحه *malḥa* /unit n, pl *-aat*/ piece of coarse salt. ‖*malḥa ʃ-ɛeen illi ma-yṣalli ɛan-nabı* a grain of salt in the eye of him who refuses to bless the Prophet (a formula of

protection against the evil eye, all who hear it being expected to bless the Prophet, unless they be the one with the eye). - *ʿaarif malḥit...* always picking on..., as in *leeh ʕinta ʿaarif malḥit il-wad-da* why are you always picking on this boy?

ملحايه *malḥaaya = malḥa.*

ملاحه *milaaḥa↑* /n/ navigation.

ملوحة *muluuḥa* /coll n/ **1** salted pickled fish (a speciality of Upper Egypt). **2** saltiness.

مليح *miliiḥ, maliiḥ↑* **1** /adj pl *milaaḥ*/ good, nice. *ʕil-maliiḥ ma-yikmal-ʃ [prov]* ≈ nobody is perfect. **2** *milaaḥ* /pl n/ chicks. *la yirabbi l-milaaḥ ʕilla l-milaaḥ [vendor's cry]* only nice people keep chicks.

ملّاحه *mallaaḥa* /n pl *-aat*/ salt cellar.

مالح *maaliḥ* /adj */ salty. (*ʕil-baḥr) il-maaliḥ* the sea. ‖*kalaam maaliḥ* coarse language. - *ʛafʿ-u maaliḥ [mus]* he plays (on a stringed instrument) slightly out of tune (by pressing the strings inaccurately).

موالح *mawaaliḥ↑* /pl n/ citrus fruit(s).

ملّح *mallaḥ* /vt/ **1** to salt. — /vi/ **2** to become salty. **3** to lose strength or effectiveness (of batteries, solutions etc.). - vn *tamliiḥ*; ava/pva *mimallaḥ*.

اتملّح *ʕitmallaḥ* /vi/ to be salted. - iva *mitmallaḥ*.

م ل خ

ملخ *malax (u)* /vt/ **1a** to uproot. **1b** to dislocate. *kitf-i mamluux* my shoulder is dislocated. **2** to put forth (leaves etc.). *ʕil-ʛuud bi-yumlux if-furraab* the stem puts out inflorescences. — /vi/ **3** to sprout, burgeon. - vn *malx, malaxaan*; ava *maalix*; pva *mamluux*.

ملخة *malxa* /pl *-aat*/ instance noun of *malx*.

اتملخ *ʕitmalax* /vi/ **1a** to be uprooted. **1b** to be dislocated. **2** to be caused to sprout (of leaves etc.). - ava/iva *mitmilix*.

ملّخ *mallax* /vt/ to uproot successively. *bi-nmallax ir-ruzz* we pull up the rice plants (one by one). - vn *tamliix*; ava/pva *mimallax*.

م ل خ ل خ

ملخلخ *muluxlux: ya muluxiyyit il-muluxlux* cry of the *muluxiyya* vendor.

م ل خ ي

ملخيّة *muluxiyya* <Gr *molokhê*> /coll n/ Jew's mallow (Corchorus olitorius).

م ل ر ي ا

ملاريا *malarya* <prob It> /n/ malaria.

م ل س

ملس *malas[1] (i)* /vt/ *[agric]* to draw a bundle or ball of mud and straw through (an irrigation ditch) to smooth and seal the sides against seepage. - vn *mals, malasaan, miliis, milaasa*; ava *màalis*; pva *mamluus*.

ملس *malas[2]* /n/ **1** Austrian crepe (fabric). **2** wrap, *milaaya* of Austrian crepe (worn by women).

ملس *milis* /adj */ sly, sneaky. *raagil milis* a slippery character.

أملس *ʕamlas* /adj, fem *malsa*, pl *muls*/ smooth. *burtuʿaan ʕamlas* smooth-skinned oranges.

ملّاس *mallaas* /n/ muddy ball of straw drawn through an irrigation ditch to smooth and seal the sides against seepage.

اتملس *ʕitmalas* /vi/ passive of *malas[1]*. - iva *mitmilis*.

ملّس *mallis* /vi/ **1** to make a stroking motion. *mallis ʛala daʿn-u* he stroked his beard. ‖*law mallis ʛaleek if-feex ḥa-tṭiib* if the sheikh blessed you (with his hand) you would recover. **2** to engage in mollycoddling. - vn *tamliis*; ava *mimallis*.

اتملّس *ʕitmallis* /vi/ (impersonal) passive of *mallis*. *ʕil-waad da ṭuul ma b-yitmallis ʛalee mif naafiʛ* as long as the boy is mollycoddled he'll never make the grade. ‖*ʕin-naas itmallisit bii* the people got him to bless them (with his hand). - iva *mitmallis*.

م ل ص

ملص *malaṣ (u)* **1** /vt/ to wrench out. *ḥ-amluṣ widaan-ak* I'll pull off your ears! **2** /vi/ to slip away, escape. *malaṣ minhum wi-hirib* he escaped from them and got away. - vn *malṣ, malaṣaan*; ava *maaliṣ*; pva *mamluuṣ*.

اتملص *ʕitmalaṣ* /vi/ to be wrenched out. - iva *mitmiliṣ*.

ملّص *mallaṣ* /vt/ to pull off or away. - vn *tamliiṣ*; ava/pva *mimallaṣ*.

اتملّص *ʕitmallaṣ* /vi/ to be pulled or pull oneself off or away. - ava/iva *mitmallaṣ*.

[1] م ل ط

مالطه *malṭa* /prop n/ Malta. ‖*bi-yiddan fi-malṭa [prov]* (he's calling to prayer in Malta) ≈ he is flogging a dead horse. - *baʛd[i] xaraab malṭa* ≈ (closing the stable door) after the horse has bolted.

مالطى *malṭi* **1** /adj */ Maltese. ‖*ḥamaam malṭi* large type of pigeon raised for food. - *(diik) malṭi* a cock with a long featherless neck. - *ḥumma malṭiyya* undulant fever. **2** /n */ a Maltese. **3** /n, no pl/ the Maltese language.

[2] م ل ط

ملط *malaṭ (u)* /vt/ **1** to strip off (clothes, feathers, skin

etc.). *malaṭt' ḥduum-i w-naṭṭeet fil-baḥr' waraa* I threw off all my clothes and jumped in the sea after him. **2** to strip bare. *malaṭit diraɛ-ha mil-ɛagiin* she scraped her arms clean of dough. — /vi/ **3** to become skinless. *wiff-i malaṭ miʃ-ʃams* my face peeled from exposure to the sun. **4** to come off (of skin). *gild-i malaṭ* my skin peeled. - vn *malṭ, malaṭaan*; ava *maaliṭ*; pva *mamluuṭ*.

ملط *malṭ* /adj invar/ bare, naked. *ɛiryaan (zalṭ') malṭ* stark naked. ‖*ma-tgib-ʃ is-sarg - ḥ-arkab malṭ* don't bring the saddle, I'll ride bareback.

اتملط ʃ*itmalaṭ* /vi/ **1** to be stripped off. **2** to be stripped bare. - iva *mitmiliṭ*.

ملّط *mallaṭ* /vt/ to strip, lay bare. *ṭilɛu ɛalee l-ḥaramiyya mallaṭuu min kull illi ɛalee* the robbers attacked him and stripped him of all he had. - vn *tamliiṭ*; ava/pva *mimallaṭ*.

اتملّط ʃ*itmallaṭ* /vi/ to be stripped, be laid bare. - iva *mitmallaṭ*.

م ل ط [3] see م ط ل: *maaliṭ*

م ل ع ن see also ل ع ن

ملعن *malɛan* /vt/ to cause to be rascally. *dalaɛ ʃumm-ak fiik huwwa lli malɛan-ak* it is your mother's spoiling you that's made you so naughty. - vn *malɛana*; ava/pva *mimalɛan*.

اتملعن ʃ*itmalɛan* /vi/ to be or become rascally. ʃ*itmalɛan min ʂuʏr-u* he's been up to no good since he was small. - ava *mitmalɛan*.

م ل ق

ملقة *malaqa* **1** /n/ open space, waste land (used, e.g., for games etc.). **2** /adj invar/ spacious. *beet malaqa* a very large house.

م ل ك

ملك *malak [1], milik (i, u)* /vt/ **1** to possess. *yimlik beet* he owns a house. ‖ ʃ*imlik waqt-ak* get a move on (so that you will still have time, i.e. be on time). **2** to get a grip on. *law milikt-u ḥ-addii-lu ḥittit ɛalqa* if I get my hands on him, some beating I'll give him! ʃ*imlik ʃaɛʂaab-ak* steady yourself! *min il-manẓar ma-mlikt'-ʃ nafs-i* the sight made me lose all self-possession. **3** /preverb/ to be able to. *min iz-zaḥma ma-milikt'-ʃ ʃaḥuṭṭ' ʃiid-i f-geeb-i* it was so crowded I couldn't get my hand into my pocket. - vn *milk, mulk*; ava *maalik*; pva *mamluuk*.

ملك *milk* /n pl *ʃamlaak*/ **1** private property. ʃ*il-ḥuṣaan da milk-i* I own this horse. *ʂaaḥib milk* property owner. *ʂaaḥib il-milk* the landlord. *raagil milk' nafs-u* a man who is his own master. **2** *ʃamlaak* /pl n/ lands, landed property. *ḍariibit ʃamlaak* property tax.

ملك *mulk* /n/ **1** reign, kingship. *wi-baɛdeen faruuq xad il-mulk' baɛd abuu* then Farouk ascended the throne after his father. **2** ʃ*il-mulk* **2a** the universe. *xalli l-mulk' lil-maalik* ≈ leave things be! ‖*ʂaaḥib il-mulk* God. **2b** the Heavens, one of the five parts of the Sufi cosmos. **3** a thing *sui generis*, a world unto itself. ʃ*ir-ragil-da mulk* that man lives in a world of his own.

مالك *maalik* /n pl *mullaak*/ proprietor, owner. ‖*maalik il-mulk* Sovereign of the universe (epithet of God).

المالكى ʃ*il-malki:* ʃ*il-mazhab il-malki* one of the four schools of Muslim jurisprudence (named after Malik b. Anas).

مملوك *mamluuk* /n pl *mamaliik*/ white male slave, mameluke.

مملوكي *mamluuki* /adj/ mameluke.

ملكيّة *milkiyya* /n/ ownership.

ملك *malak [2]* = *malaak*.

ملكة *malaka* /n pl *-aat*/ knack, aptitude. *malakit il-ḥifẓ* the ability to learn by heart.

ملك *malik* /n pl *miluuk, muluuk*/ king. ‖*malik walla ktaaba* heads or tails?

ملكة *malika* /n pl *-aat*/ queen.

ملكي *malaki* /adj/ royal, regal. *niẓaam malaki* monarchical system. ‖*laabis malaki* wearing plain clothes, out of uniform.

ملوكي *muluuki* or *miluuki* /adj invar/ marvellous, magnificent. ʃ*il-ḥafla kaanit miluuki* it was a marvellous party. ‖*ɛinab miluuki* variety of grape having a tough skin of a mottled reddish-green colour.

ملاك *malaak* /n pl *malayka*/ angel. ʃ*iza ḥaḍarit il-malayka ẓahabit if-ʃayaṭiin [prov]* when angels enter devils leave (and vice versa). ‖*malaykit-u xufaaf* ≈ he has a cheerful disposition. - *malaykit-u haffit* I have a feeling he's about to arrive. - *bi-yaakul ruzz' maɛa l-malayka* ≈ he's fast asleep.

ملّاكي *mallaaki* /adj invar/ privately-owned. *ɛarabiyya mallaaki* a private car.

مملكة *mamlaka* /n pl *mamaalik*/ kingdom.

ملكوت *malakoot, malakuut* /n/ **1** God's creation. *faakir ʃinnak ḥa-tɛaddil il-malakoot* do you think you can set the whole world to rights? ‖*malakuut allaah [Chr]* the Kingdom of God. - *hina malakoot* everything's topsy-turvy here, it's a madhouse. - *ɛayʃa f-malakoot taani* she lives in a dream world. **2** ʃ*il-malakuut* the seven Paradises, one of the five parts of the Sufi cosmos.

اتملك ʃ*itmalak* /vi/ passive of *malak [1]*. - iva *mitmilik*.

ملّك *mallik* /vt/ **1a** to give (s.o.) possession of. ʃ*il-ḥukuuma mallikit kull' fallaaḥ xamas fadadiin* the

government gave every peasant possession of five feddans. **1b** to give ownership of. *ʕil-ḥukuuma mallikit xamas fadadiin li-kull[i] fallaaḥ* the government gave five feddans to every peasant. **2** to cause (s.o.) to gain the upper hand. *ma-tmallikuu-ʃ minnak* don't let him get a hold on you! - vn *tamliik*; ava *mimallik*.
تمليك *tamliik* /n/ ownership. ‖*ʃaqqa tamliik* a privately owned apartment (as opposed to one for which rent is paid).
اتملّك *ʕitmallik* **1** /vt/ to be given possession of. — /vi/ **2** to be given in ownership. *ʕil-ʕarḍ[i] b-titmallik lil-fallaḥiin* the land is given to the peasants to own. **3** to gain supremacy. *ʕil-ɣaḍab itmallik minnu* anger got the better of him. - vn *tamalluk*↑; ava/pva *mitmallik*.
امتلك *ʕimtalak* /vt/ to possess, own. *ʕumm-i timtilik xamas fadadiin* my mother owns five feddans.* - vn *ʕimtilaak*; ava *mimtilik*; pva *mumtalak*.
ممتلكات *mumtalakaat* /pl n/ possessions.

م ل ك ا ن
ملكان *malakaan* /coll n/ slots into which the slats of a shutter are fitted. *ʕiʕmil il-ɡaayim da malakaan* make that upright slotted (to hold slats). *waraɡ malakaan* slats (of a shutter).

م ل ل [1]
ملّ *mall (i)* **1** /vi/ to become bored. *ʕit-tamsiliyya xallit-ni ʕamill* the play bored me. **2** /vt/ to find boring. *malleet ir-rutiin* I found the routine boring. - vn *malal, malalaan*; ava *maalil*; pva *mamluul*.
ملل *malal* /n/ boredom.
مُمِلّ *mumill* /adj */ boring.
اتملّ *ʕitmall* /vi/ **1** to be found boring. **2** (impersonal) passive of *mall* 1. *kalaam-u ma-yitmall[i]-ʃ minnu* his conversation is not boring. - iva *mitmall*.

م ل ل [2]
ملّة *milla, mulla*[1]↓ /n pl *milal*/ **1** religion. ‖*raagil ma-luu-ʃ milla* a ruthless man. **2** religious community.
ملّي *milli*[1] /adj/ pertaining to a religious community. *maglis milli [Chr]* council of laymen which governs internal, financial and administrative affairs of the church.

م ل ل [3]
ملّة *malla*[1] /n/ warmth in an oven away from, or after the extinguishing of, the fire.
مول *mull* <Fr *bémol*> /n/ *[mus]* flat. *nuṣṣ[i] mull* quarter tone flat. - also *bimull*.

ملّة *mulla*[2] /n pl *mulal, mullaat*/ that part of a bed on which the mattress rests, mattress base.

م ل ل ي
ملي *milli*[2] <Fr *millimètre*> /n/ millimetre. ‖*bil-milli* precisely, as in *ḥ-aqabl-ak is-saaʕa tisʕa bil-milli* I'll meet you at nine o'clock on the dot.

م ل ل ي م
مليم *malliim* (also *malliin*↓) <Fr *millième*> /n pl *malaliim, malaliin*/ one tenth of a piastre, millime.

م ل م see م ل ل ى م: *malliim*

م ل م ق
ملمق *malmaq* /vt/ to splash, slop. *malmaq mayya ktiir wi-huwwa b-yiɤsil ʕidee* he splashed a lot of water around while washing his hands. - vn *malmaqa*; ava/pva *mimalmaq*.
اتملمق *ʕitmalmaq* /vi/ to be splashed, be slopped. - iva *mitmalmaq*.

م ل م ل
ململ *malmil* /vt/ to cause to become restless or fidgety. - vn *malmala*; ava *mimalmil*.
اتململ *ʕitmalmil* /vi/ to become or be made restless or fidgety. - ava/iva *mitmalmil*.

م ل ن [1] see م ل ا ن: *malaana*

م ل ن [2] see م ل ل ى م: *malliin*

م ل و [1]
ملوة *malwa*[1] /n pl *-aat, malaawi*/ dry measure equivalent to one fourth of a *keela* (q.v.).

م ل و [2] see م ل ى [1]: *malw, malwa*[2]

م ل ى [1]
ملا *mala*[2] *(a)* /vt/ **1** to fill. *ʕimla l-ɡulla mayya* fill the pitcher with water. *mala l-xanaat* he filled in the blanks. ‖*ʕana raagil il-beet wi-laazim ʕamla markaz-i* I'm the man of the house and I must live up to my position. *raagil malw[i] hduum-u* a respected man. - *mala l-ʕeen* (1) to be worthwhile, as in *ʕiza kunt[a] ʕaayiz tiʕmil ḥaaga xallii-ha timla l-ʕeen* if you want to do something, let it be worthwhile. (2) to satisfy, as in *huwwa-na miʃ maali ʕeen-ak walla ʕeeh* ≈ aren't I good enough for you, or what? *ʕil-bani ʕaadam ma-yimlaa-ʃ ʕeen-u ʕilla*

t-turaab [prov] ≈ only the grave can put an end to man's greed. **2** to restring (e.g., a sieve). *ʕis-silk' ya-lli timli l-manxul [vendor's cry]* (here is) mesh, you who would restring your sieve! **3** to wind (a watch or clock). **4** to cut (a gramophone record). *ɦa-yimla ʕusṭuwaana* he will cut a disc. - vn *maly, malw, malayaan*; ava *maali*; pva *mamli*.

ملو *malw* /n/ quantity sufficient for one filling. *malw' kubbaaya* a glassful.

ملوة *malwa²* /pl *-aat*/ instance noun of *malw*. *ʕil-maqrab ɛaayiz malwa gdiida* the racket needs re-stringing.

ملية *malya = malwa*.

ملىء *mali* /adj */ comfortably-off, wealthy.

مليان *malyaan* /adj */ **1** full. *ʕif-faariɛ malyaan naas* the street is full of people. ‖*ɋalb-i malyaan minnu* I've had enough of him. - *yiqrab fil-malyaan* he shoots to kill. - *kalaam fil-malyaan* meaningful words. **2** plump. **3** rich, wealthy.

ملاّ *malla²* /n pl *mallayiin*/ **1** water carrier who fills receptacles with water for householders without a mains supply or pump. **2** *[rur]* mosque employee whose job it is to pump-fill the water-tank of the mosque.

ملاية *milaaya* /n pl *-aat, mily, mili*/ **1** bedsheet. *milaayit liɦaaf* loose covering for a quilt. **2** (also *milaaya laff*) black wrap worn by women in public (see Pl.F, 17). ‖*faraʃ il-milaaya li-* to abuse publicly and vulgarly, as in *ʕiskut la-tifrif-lak il-milaaya* keep quiet or she will give you a slanging!

اتملى *ʕitmala* /vi/ passive of *mala²*. - iva *mitmili*.

ملّى *malla³* /vt/ *[agric]* to irrigate by flooding. *bi-nmalli l-ʕarḍ' tamliyya xafiifa muddit ʕusbuɛeen* we flood the ground lightly for two weeks. - vn *tamliyya*; ava *mimalli*.

اتملّى *ʕitmalla'* /vi/ to be irrigated by flooding. - iva *mitmalli*.

انتلى *ʕintala* /vi/ **1** to become full. **2** to be filled. *ʕil-kubbaaya ntalit li-ɦabbit ɛen-ha* the glass has been filled to the brim. - ava/iva *mintili*.

م ل ى ²

إملاء *ʕimla, ʕimlaaʔ↑* /n pl *ʕamaali*/ dictation.

ملّى *malla⁴* /vt/ to dictate (to). *mallii-lu d-dars* dictate the lesson to him. *mallii-ni* dictate to me! - vn *tamliyya*; ava *mimalli*.

اتملّى *ʕitmalla²* /vi/ to be dictated. - iva *mitmalli*.

م ل ى ³ see م ل ا : *mala'*

م ل ى ن –

مليونير *milyuneer* <prob Fr> /n pl *-aat*/ millionaire.

م ل ى و ن

مليون *milyoon, malyuun* <Fr> **1** /num pl *malayiin*/ million. **2** *ʕil-milyoon* /adj invar/ the millionth.

م م

مم *mam* (also *mammah*) <poss Copt> *[children]* **1** /n/ food. **2** /interj/ eat! - also *ʕamm, hamm*.

م م ب ر –

ممبريطه *mambariiṭa, mambareeṭa* <perh It *tamburetto*> /n pl *mambaraayiṭ*/ porthole.

م م ب ن –

ممبنوس *mambanoos* <perh T *bombıres* from It> /n/ *[naut]* bowsprit.

م م ب ز –

ممبوزيا *mambuzya* /coll n/ Burdekin plum(s).

م م م ا

مما *mimmaʔ↑* /conj/ **1** a thing or fact which. *ʕahmalu f-tanfiiz il-marɦala l-ʕuula wıt-tanya mimma ʕadda l-taʕxiir il-marɦala t-talta* they were negligent at the first and second stages, which led to the delaying of the third. **2** among the things or facts which. *duxul-hum fi-ɦugrit it-taftiif mımma yıɛaarıḍ maɛa ʕigraʕaat il-ʕamn* it was contrary to security regulations for them to enter the inspection chamber. ‖*mimma lazza wa-ṭaabʔ↑* ≈ the choicest of food.

م م م ه see م م : *mammah*

م ن ¹

من *min'* /often shortened before def art to *mi-*; w pron suff *minni, minnak, mınnik, minnu, minha/minnaha, minna/mınnina, minku/minnuku, minhum/mınnuhum/* preposition indicating **1a** point of origin or departure, tangible or intangible. *ga mıl-balad* he came from the village. *dafaɛ talatiin gıneeh min ɟeeb-u* he paid thirty pounds out of his own pocket. *ɟaɦɦaa-ni min ɛizz' noom-i* he woke me from deep sleep. *ʕiṭlaɛ min ɛandak* come out from where you are! *ʕınzil min ɛas-sillım* come down off the ladder! *bi-yaaxud min bariiza w-ṭaaliɛ* he charges (anything) from ten piastres upwards. ‖*ʕismaɛ ya fandi minnak lu* listen, all of you (i.e. from first to last)! - *bi-yitgawwizu minhum fiihum* they marry within the family. - *la mınnu wala kfaayit farr-u* not only does he make no helpful contributions, he does not even spare us his evil-doing. - *wiqiɛ min ṭuul-u* he fell down flat. **1b** passage through. *taɛaala min hina mif*

min hinaak come through here, not through there! *ʕiʃ-ʃams[i] ma-bi-tʤaddii-ʃ minha* sunlight does not pass through it. **2a** relation between past and present time. *min talatiin sana* thirty years ago. *kunt[i] hina min zamaan* I was here a long time ago. *rawwaḥ min nuṣṣ[i] saaʕa* he went home half an hour ago. **2b** duration from a point in past time up to the present. *min talatiin sana* for thirty years. *ʕana hina min zamaan* I've been here for a long time. *min ṣuɣr-u* since his childhood. *bi-yiftaɣal muhandis min ʧiimit mudda* he's been working as an engineer for some time. **2c** incipience. *bi-yiigi min ṣabaaḥit rabb-i-na* he comes first thing in the morning. *bi-yiṣḥa mil-ʕadaan* he gets up at dawn. **3** cause or reason. *maat min il-ʕaṭaʃ* he died of thirst. *ʕamalt[i] da min ɣulb-i* I did that out of frustration. *ziʕlu minnu* they were upset with him. **4** comparative relationship. *hiyya l-burtuʧaana ʕakbar min il-baṭṭiixa* is an orange bigger than a water-melon? *ʕaktar min nuṣṣ[i] saaʕa* more than half an hour. **5** partitive relationship. *ḥagar garaniit minnu ʕaḥmar wi-minnu ʕiswid* there is red granite and black. *min (ʤimn[i])* *ʕasbaab il-ḥadsa* among the reasons for the accident. *ʕadad kibiir min banaat il-ʕayyaam di* a great number of today's girls. || *ʕin-nahar-da sabaʕtaaʃar minnu* today is the seventeeth of the month. *-minnu bawwaab wi-minnu ʃayyaal* he is both doorman and porter. *-minnu fii* all in one, as in *siriir wi-kanaba minnu fii* a bed and a sofa all in one. *-... wa-llazi minnu ...* and what not, as in *baʕd it-taḥiyyaat wa-llazi minnu* after greetings and so forth. **6** derivational relationship. *gizam min gild il-ɣazaal* gazelle-skin shoes. *ʕamal mil-ḥabba ʧubba* ≈ he made a mountain out of a molehill. **7** reference, regard or consideration. *ḥaasib miʃ-ʃams* beware of the sun! *maḥruus mil-ʕeen* protected from the evil eye. *xalli baal-ak mil-ʕuṣuul* behave properly! *ʕeen-ak mil-baab* keep your eye on the door! *widn-ak mi-lli bi-yʧuluu* lend an ear to what they say. **8** lack of control over a circumstance. *ʕil-ḥuṣaan ramaḥ minnu* the horse bolted with him. *ʕil-ʕaṣfuura maatit minni* the bird died on me.

منين *mineen[1]* /interrog adv/ whence? *humma mneen* where are they from? *ḥa-niʃtiri xuḍar-na mneen* where shall we buy our vegetables from? || *ʕana ḫ-alaʧii-ha mneen walla mneen* ≈ I've got troubles on every hand. *-ḥineen wi-mneen* see *ḥineen[2]*.

[2] م ن

من *min[2]* /rel pron/ he who, whoever. *min ʧaddim is-sabt[i] yilʧa l-ḥadd* ≈ the good you sow today you reap tomorrow.

م ن ب ا ر

عمبار، منبار *mimbaar* <T *mumbar*> /coll n, pl *manabiir*/ sausage(s) made of the lower end of intestines stuffed with rice and spices.

م ن ت ا ج

مونتاج *muntaaj* <Fr> /n/ montage.

م ن ت ى ر

مونتير *muntiir, munteer* <Fr *monteur*> /n pl *-aat*/ *[cin]* editor, cutter.

م ن ج

منجه *manga[1]* /coll n/ mango(es).

منجاية *mangaaya* /unit n, pl *-aat*/ a mango.

م ن ج ر ي

منجريّة *mangariyya* <prob Engl slang *mungaree*> /n/ *[joc slang]* food.

[1] (م ن ج ل)

منجل *mangal* <perh Copt> /n pl *manaagil*/ type of large sickle.

منجلة *mangala* <Gr *mengelê*> /n pl *manaagil*/ *[mech]* bench vice.

[2] م ن ج ل see ء ن ج ى ل : *mangaliyya*

م ن ج ه

منجه *mangih* /vt/ to set (s.o. or s.th.) up well, provide (s.o. or s.th.) with elegance and luxury. *walad ʕaaxir mangaha* a swank kid. -vn *mangaha*; ava *mimangih*. اتمنجه *ʕitmangih* /vi/ passive of *mangih*. -iva *mitmangih*.

م ن ج ى

منجى *mangi* <prob Engl slang *mungy*> /n/ *[slang]* food.

يمنجى *yimangi* /vi/ he digs into the grub, he eats.

م ن ح

منح *manaḥ (a)* /vt/ to grant. -vn *manḥ*; ava *maaniḥ*; pva *mamnuuḥ*.

منحة *minḥa* /n pl *-aat, minaḥ*/ grant, award, scholarship.

اتمنح *ʕitmanaḥ* /vi/ to be granted. -iva *mitminiḥ*.

م ن خ see ن و خ : *manaax*

م ن خ ل -
منخوليا *manaxulya* <Gr *melankholia*> /n/ disturbance of the mind.

(م ن د ل)
مندل *mandal* /n/ *[magic]* contemplation of the surface of a reflecting liquid such as ink or oil (for the purpose of divination). *ḍarab* (or *ʕamal* or *fataḥ*) *mandal* to divine by this means. *ṣaaḥib mandal* one who practises this type of divination.
مندالة *mindaala* /n pl *-aat*/ tamping-iron.

م ن د ل -
مندولين *manduliin* <Fr *mandoline*> /n/ **1** *una corda* pedal (piano). **2** mandoline.

م ن د ى ل
منديل *mandiil* /n pl *manadiil*/ **1** kerchief. *mandiil (raas)* triangular handkerchief (see Pl.F, 9). *mandiil (ʕiid)* handkerchief. **2a** fatty tissue covering the underbelly of an animal (e.g., sheep, cattle). **2b** membranous covering of the intestine.

(م ن ش)
منش *manʃ* <Fr *manche*> /n pl *-aat*/ sleeve. ‖*(baḥr) il-manʃ* the English Channel.
مونش *munʃ* /n/ *[text]* texturized filament.

م ن ش ت ت
مانسيت *manʃitt* <Fr *manchette*> /n pl *-aat*/ banner headline (in a newspaper).

م ن ط ل - see ب ن ط ل - : *manṭaloon*

م ن ظ ر see also ن ظ ر
منظرة *manẓara'* /vn/ showing-off, affecting superiority.
اتمنظر *ʔitmanẓar* /vi/ **1** to show off, swank. **2** to act in a superior manner. *ʕammaal yitmanẓar ʕala zumalaat-u leeh - huwwa ʔaḥsan minhum* why is he lording it over his friends? is he any better than they? - ava *mitmanẓar*.

م ن ع
منع *manaʕ (a)* /vt/ **1** to forbid. *manaʕ-ha mil-xuruug* he forbade her to go out. *mamnuuʕ it-tadxiin* no smoking. **2** to prevent. *ʔil-laff' b-yimnaʕ ir-ruṭuuba* wrapping keeps out the moisture. ‖*ḥubuub manʕ il-ḥaml* birth control pills. - vn *manʕ*, *manaʕaan*; ava *maaniʕ*; pva *mamnuuʕ*.

¶ *manaʕ ʕan* to keep (s.th.) away from (s.o. or s.th.). *ya ʔawliyyit allaah timnaʕu ʕannu l-ʕaks* saints of God, protect him from the work of bad spirits! - *manʕan li* in order to avoid. *ʔaḥsan niṛayyar il-mawḍuuʕ manʕan liz-zaʕal* it is better to change the subject in order to avoid annoyance.
مانع *maaniʕ* /n pl *mawaaniʕ*/ obstacle, impediment. ‖*maaniʕ ṣada* rust preventer. - *ma-fii-ʃ maaniʕ* that's O.K., there's no objection, as in *ma-fii-ʃ maaniʕ yikuun ir-raagil mibarṭal-u* it's entirely possible that the man is bribing him. - *ʕandak maaniʕ* do you have any objection? - *ma-ʕandii-ʃ maaniʕ* I've no objection, it's O.K. by me. - *sibaaq il-mawaaniʕ [sport]* obstacle race.
مناعة *manaaʕa* /n/ **1** immunity (from a disease). **2** impermeability. *ʔiṭ-ṭibaaʕa bil-manaaʕa [text]* a batik type of printing.
اتمنع *ʔitmanaʕ* /vi/ **1** to be forbidden. **2** to be prevented. - iva *mitminiʕ*.
امتنع *ʔimtanaʕ* /vi/ to abstain, refuse to have anything to do (with s.th.). *wi-hiyya ʕayyaana b-timtiniʕ ʕan il-ʔakl* she refuses to eat when she's sick. - vn *ʔimtinaaʕ*↑; ava *mimtiniʕ*.

م ن ف ت -
مانيفاتورة *manifatuura* <T *manifatura* from It> /n/ *[obsol]* **1** /coll n/ hand-woven fabric(s). **2** /pl *-aat*/ **2a** factory or workshop producing hand-woven goods. **2b** fabrics department (in a store).

م ن ف س -
منفستو *manafistu* <It *manifesto*> /n pl *-haat*/ bus conductor's ticket control sheet.

م ن ف ل ل
مانفلا *manafilla* <It *manovella*> /n pl *-aat*/ crank.

م ن ك ا ن
مانيكان *manikaan* <Fr> /n pl *-aat*/ **1** fashion model. **2** mannequin (dummy).

م ن ل ج - see also م ن ل و ج
منولوجست، منولوجست *munulugist* <Fr *monologuiste*> /n pl *-aat*/ entertainer who sings humorous *munulogaat* (q.v.), which he dramatizes with comic gestures and intersperses with jokes.

م ن ل ل
مانيلا *manilla* /prop n/ Manila. ‖*waraq manilla* manila paper. - *ḥabl' manilla* Manila hemp rope.

م ن ل ي
منيلي *manilli* /n/ support of a chair arm.

م ن ل و ج see also م ن ل ج
منولوج *munuloog* <Fr *monologue*> /n pl *-aat*/ type of popular entertainment consisting of a solo song of indeterminate length and of varied themes characterized by a refrain of one or two lines which is repeated after each section.

م ن م ت ر
مانوميتر *manumitr* <Fr *manomètre*> /n pl *-aat*/ pressure meter, pressure gauge.

م ن ن [1]
منّ *mann*[1] *(i)* /vi/ **1** to disburse, bestow in a condescending fashion. **2** to enumerate favours one has done (for s.o.). *ʕil-mann*[i] *yifsid il-maʒruuf* reminding someone of the assistance you have afforded him spoils the good deed itself. - vn *mann*; ava *maanin*; pva *mamnuun*.
ممنون *mamnuun* /adj */ grateful, obliged.
ممنونيّة *mamnuniyya* /n/ gratefulness. ‖*bi-kull*[i] *mamnuniyya* with pleasure, as in *mumkin tisallif-ni ktaab-ak.* - *bi-kull*[i] *mamnuniyya* 'Could you lend me your book?' 'With pleasure.'
امتنّ *ʕimtann* /vi/ **1** to enumerate favours one has done (for s.o.). **2** to express one's gratitude for favours done. *ʕana mumtann*[i] *liik* I am grateful to you. - vn *ʕimtinaan*; ava *mumtann*.

م ن ن [2]
منّ *mann*[2] /coll n/ honeydew-producing species of aphis that attacks plants.

م ن و ر see [3] ن و ر : *munawra, minawra*

م ن و ى ش see ن و ش : *manawiifi*

م ن ى
منى *many, mani* /n/ semen.
منية *munya* /n pl *muna*/ desire, wish. *munyit il-ʔalb* heart's desire. *muna ʕeen-i* my greatest desire. *yoom il-muna* greatly-desired day.
أمنية *ʕumniya, ʕumniyya* /n pl *ʕamaani*/ wish.
منّى *manna* /vt/ to raise hopes in (s.o.). *mannaa-ni ygawwiz-ni bint-u* he raised my hopes that he would marry his daughter to me. ‖*ma-luu-ʃ ʕala rabb-i-na tamniyya* (he has no wish to ask of God) ≈ he has everything that anyone could wish for. - vn *tamniyya*; ava *mimanni*.
اتمنّى *ʔitmanna* /vi/ to wish. *ʔatmanna l-ʔarḍ*[i] *tinfaqq*[i] *w-tiblaʕ-ni* would that the earth would split and swallow me up! ‖*ʔana b-atmanna ḍufr*[i] *min ḍawafr-ak* ≈ I would give anything to serve you. - ava *mitmanni*.
تمنّى *tamanna*[↑] = *ʔitmanna*. - vn *tamanni*.
تمنّيات *tamanniyyaat* /pl n/ wishes. *tamanniyyaat-i ṭ-ṭayyiba* my best wishes.
استمنّى *ʔistimanna*[↓] /vt/ to long for, yearn for. ‖*ʔil-waaḥid bi-yistimannaa-k ir-riḍa tirḍa* one is eager to satisfy your slightest wish. - ava *mistimanni*.

م ن ى ش
منيش *mineef* <Fr *manège*> /n pl *-aat*/ ring (e.g., circus ring, ring for horse training).

م ن ى ك see also ن ى ك
اتمنيك *ʔitmanyik* /vi/ *[coarse]* to waste time, mess about, fuck around. - vn *manyaka*; ava *mitmanyik*.

م ن ى ن [1]
منين *mineen*[2] /n/ biscuit made of flour, clarified butter and salt, flavoured with sesame, fennel etc., and shaped into thin rectangles. - also *bineen*.

م ن ى ن [2] see [1] م ن : *mineen*[1]

م ه د
مهد *mahd* /n pl *muhuud*/ cradle.
مهّد *mahhid* /vt/ to prepare, set in order, pave (e.g., a way for s.o.). *mahhiduu-lak iṭ-ṭariiq wi-ʕaleek il-baaqi* they have prepared the way for you and the rest is up to you. - vn *tamhiid*; ava/pva *mimahhid*.
تمهيد *tamhiid* /n/ **1** preface (of a book). **2** *[mus]* unmetred musical introduction. **2** period of time between the raising of the conductor's baton and the beginning of a musical selection.
اتمهّد *ʔitmahhid* /vi/ passive of *mahhid*. - iva *mitmahhid*.

م ه ر [1]
مهر *mahr* /n pl *muhuur*/ money paid by a groom's family to the bride's as a contribution to the *gihaaz* (q.v.).

م ه ر [2]
مهر *muhr* /n pl *muhuur, muhúra*/ **1** colt. **2** *[gym]* small vaulting horse or buck.
مهرة *muhra* /n pl *-aat*/ filly.

م ه ر ³
مهارة *mahaara* /n pl *-aat*/ skill.
ماهر *maahir* /adj * and pl *mahara*/ skilled.

م ه ر ا ن
ماهوران *mahuraan* /n/ *[mus]* name given to the note F (on the fifth line of the staff).

م ه ر ج -
مهرجان *mahragaan* <P *mihrgân*> /n pl *-aat*/ parade, festival, carnival.

م ه ق
مهق *mahaq (u)* /vt/ *[abus]* to cause to smirk. *ʔinta mamhuuq leeh - ma-fuft'-ʃ illi ħaṣal* what the hell are you so happy about, didn't you see what happened? - vn *mahaqaan, mahq*; ava *maahiq*; pva *mamhuuq*.
مهقة *mahqa* /inst n, pl *-aat*/ a smirk.
اتمهق *ʔitmahaq* /vi/ to smirk. - ava *mitmihiq*.

م ه ك
مهك *mahak (u)* /vt/ to mash, purée (vegetables etc.). ‖*mara mamhuuka* a loose woman. - vn *mahk*; ava *maahik*; pva *mamhuuk*.
اتمهك *ʔitmahak* /vi/ passive of *mahak*. - iva *mitmihik*.
انمهك *ʔinmahak* = *ʔitmahak*. - iva *minmihik*.

م ه ل
مهل *mahl, mihl* /n/ respite, delay. *ʔil-filuus ɛala l-mahl* the money can wait. ‖*ɛala mahl-* without haste, as in *bi-yimʃi ɛala mahl-u* he goes at his own pace, *bi-yiṭlaɛ is-sillim ɛala mahl-u qawi* he takes ages to climb the stairs, *ɛala (ʔaqall' min) mahl-ak* take your time! take all the time you want!
مهلة *muhla* /n pl *-aat, muhal*/ respite, delay. *ħ-addii-k ʔaaxir muhla lid-dafɛ* I'll give you a last delay on the payment.
مهّل *mahhil* /vt/ to give (s.o.) extra time, give respite to. *mahhil-ni ʃwayya w-ʔana ʔasaddid illi ɛalayya* give me a little time and I'll pay my debt. - vn *tamhiil*; ava/pva *mimahhil*.
اتمهّل *ʔitmahhil* /vi/ **1** to give (extra) time (to s.o.), grant a respite (to s.o.). *ʔana tmahhilt" ɛalee ktiir* I've given him plenty of time. **2** to be given extra time, be granted a respite. - ava/iva *mitmahhil*.
أمهل *ʔamhal* /vt/ to allow (s.o.) time, give respite to. *ʔimhil-ni* give me time. ‖*(rabb-i-na) yimhil wa-la yuhmil [prov]* ≈ God may give respite but He will eventually judge. - vn *ʔimhaal*; ava *mimhil*.

استمهل *ʔistamhil* **1** /vt/ to give (s.o.) extra time, give respite to (s.o.). *ʔistamhilt-u ktiir* I've given him plenty of time. **2**↓ /vi/ to delay, tarry. *mistamhil fi-ʃuɤl-u zyaada ɛan il-luzuum* he takes too much time over his work. ‖*gat-lu muṣiiba ma-stamhil-ʃ* a disaster befell him and (after that) he didn't last for long. - ava *mistamhil*.

م ه ل ل ب see ² ه ل ب : *mahallabiyya*

م ه م ا
مهما *mahma* /conj/ no matter how much. *fii naas bi-tidħak mahma kaanit in-nukta bayxa* there are people who laugh no matter how stale the joke. *mahma bɛidna da-ħna wlaad-ik* no matter how far we are from you we are your children.

م ه م ز see also ه م ز
مهمز *mahmiz* /vt/ to urge on, stimulate, encourage. *mahmiz ibn-ak ʃwayya w-xallii yitfaṭṭar ɛaʃaan yingaħ* push your son a bit and get him to put some effort into his work so that he'll pass (the exam). - vn *mahmaza*; ava/pva *mimahmiz*.
مهماز *mihmaaz* /n pl *mahamiiz*/ spur.
اتمهمز *ʔitmahmiz* /vi/ **1** to be urged on, be stimulated, be encouraged. **2** to arouse oneself to greater efforts. *ʔil-ħamdu li-llaah ıtmahmiz ʃwayya min yoom ma kallimt-u* since the day I talked to him he's pulled his socks up, thank God. - ava/iva *mitmahmiz*.

م ه م ط
مهمط *mahmaṭ* **1** /vt/ to stretch out of shape. *riglee-k ik-kibiira mahmaṭit iʃ-ʃaraab* your big feet have pulled the socks out of shape. **2** /vi/ to become stretched out of shape. *ʔil-ħibaal ik-kittaan bi-tmahmaṭ baɛd' ma titball* flax ropes stretch after being wetted. - vn *mahmaṭa*; ava/pva *mimahmaṭ*.
اتمهمط *ʔitmahmaṭ* /vi/ to be or become stretched out of shape. - ava/iva *mitmahmaṭ*.

م ه ن
مهنه *mihna* /n pl *mihan*/ profession. *kull' waaħid wi-lu mihna* (every person has his own trade) ≈ it is natural for a person not to know much about other people's skills.
مهني *mihani* /adj */ professional. *ʔil-mihaniyyiin* professionals. *(ṭaabiɛ) damɤa mihaniyya* a duty stamp used on official documents concerning particular professions (e.g., *mihan taɛlimiyya* for the Ministry of Education, *mihan ṭibbiyya* for the Ministry of Health).

امتهن ʕimtahan /vt/ to run down, belittle. *leeh timtihin karaamit nafs-ak biʃ-ʃakl-i-da* why compromise your good name in this manner? -vn *ʕimtihaan*; ava *mimtihin*.

م ه ى

مهية *muhya* /n pl *-aay*/ large two-handled flexible basket woven from palm leaves (fishermen's jargon).

م ه ى ص see also ه ى ص

مهيص *mahyaṣ* /vi/ to have a good time, indulge oneself. -vn *mahyaṣa*; ava *mimahyaṣ*.

مهياص *mihyaaṣ* /adj pl *mahayiiṣ*/ whimsical, capricious.

اتمهيص ʕitmahyaṣ = *mahyaṣ*. - ava *mitmahyaṣ*.

م ه ى ى

ماهيّة *mahiyya* <T *mâhiye*> /n pl *-aat, mahaaya*/ monthly salary.

م و ت

مات *maat (u)* /vi/ **1** to die. *maatit fil-ḥarb* she died in the war. *miin mat-lak* who of your family has died? ‖*da baxiil yimuut ɛala ʔirf* he's so stingy he'd give his life for a piastre. - *maat fi-gild-u* he was scared to death. - *ʔiid-i maatit ɛal-ʔalam* my hand was gripping the pen so tightly that now I cannot open it. **2** to be checkmated (of a king in chess). -vn *moot*.

¶ *yimuut fi-* to be crazy about, as in *b-amuut fiiki* I'm crazy about you. *bi-ymuut fil-ɛarabiyyaat* he's wild about cars. - *maat ɛan* (1) to die leaving. *maat ɛan talatiin faddaan* he died leaving thirty feddans, *maat ɛan zooga w-talat ɛiyaal* he died leaving a wife and three kids. (2) to die at the age of. *maat ɛan ɛifriin sana* he died at twenty.

موت *moot* **1** /n/ death. *masʔalit ḥayaah ʔaw moot* a matter of life or death. ‖*moot wi-xaraab diyaar* death and destruction, total ruin. **2** /adv/ extremely, to the utmost. *ʔana taɛbaana moot* I'm tired to death. *b-aḥibb-ak moot* I love you madly.

موتة *moota* /inst n/ a death. *moota mhabbiba* a terrible death. ‖*hiyya moota walla tneen* ≈ one can only die once (so there's no reason to be a coward).

ميتة *meeta'* /adj invar/ miserly, stingy.

ميتان *maytaan* /adj */ weak, sickly, looking ready to die.

ميّت *mayyit* /pl *-iin, ʔamwaat*/ **1** /adj/ dead. ‖*ʔana mayyit min il-guuɛ* I'm starving! **2** /n/ deceased person. *ʔil-masiiḥ ʔaam min been il-ʔamwaat* Christ rose from the dead.

¶ *bil-mayyit* at least. *ʔana mʔaddar ʔinni ʔaltiʔi fiiha bil-mayyit ɛafara ʔitnaafar gineeh* I reckon I'll find at least ten or twelve pounds in it.

ممات *mamaat'* /n/ death.

ميت *mumiit* **1** /adj/ lethal, deadly. *ʔitɛarraḍt' l-xaṭar mumiit* I faced a terrible danger. **2** /n/ Bringer of death (epithet of God).

موّت *mawwit* /vt/ **1** to kill. *ya tmawwituu-hum ya tiṣṭaduu-hum ɛaʃaan in-naas takul-hum* either kill them (outright), or hunt them so that people may eat them. *bi-ybarram fi-ʃanab-u b-ʃakl' ymawwit min id-diḥk* the way he twirls his moustache is enough to kill (one) with laughter. **2a** to smooth. **2b** to round off (an edge). **3** to checkmate (a king, in chess). -vn *tamwiit*; ava *mimawwit*.

اتماوت *ʔitmaawit* /vi/ **1** to pretend to be dead. **2** to pretend to be very sick. - ava *mitmaawit*.

استموت *ʔistamwit* /vi/ **1** to pretend to be on one's death-bed. *ruḥna nzuur-u laçenaa mistamwit wi-ɛaamil nafs-u ɛayyaan* we went to visit him and found him pretending he was ill and about to die. **2** to exert oneself to the utmost. *ʔil-laɛɛiiba mistamwitiin ɛafaan yiksabu* the players are really fighting to win. -vn *ʔistimwaat*; ava *mistamwit*.

م و ج

موج *moog* /coll n/ wave(s).

موجة *mooga* /unit n, pl *-aat, ʔamwaag*/ a wave.

موجاية *mogaaya* /pl *-aat*/ = *mooga*.

موّج *mawwig* /vt/ **1** to cause (a surface) to become rippled or wavy. **2** to cause to vibrate or oscillate. — /vi/ **3** to ripple. **4** to show variation of tone (of colours). *leeh il-ɛarabiyya lon-ha mmawwig kida* why is the colour of the car not even? -vn *tamwiig*; ava/pva *mimawwig*.

اتموّج *ʔitmawwig* /vi/ **1** to be made or to become rippled, become wavy (of a surface). **2** to vibrate, oscillate. -vn *tamawwug*; ava/iva *mitmawwig*.

تموّج *tamawwug* /n pl *-aat*/ **1** ripple, wave (on a surface). **2** vibration, oscillation.

م و ر

مور *moor* <Fr *mort*> /n/ *[auto]* neutral (gear). *ḥuṭṭ il-ɛarabiyya fil-moor* put the car in neutral.

موّر *mawwar* /vt/ to put (a car etc.) in neutral gear. -vn *tamwiir*; ava/pva *mimawwar*.

اتموّر *ʔitmawwar* /vi/ to be put in neutral gear (of a car etc.) - iva *mitmawwar*.

م و ر د see also م ا ء

موردِ، ماورد *maward* /n/ rose water.

م و ز
موز *mooz* /coll n/ banana(s). *ʂubaaɛ mooz* one banana. *mooz bi-laban* banana milk-shake.
موزة *mooza* /unit n, pl *-aat*/ **1** a banana. **2** shin (of meat). *moozit ɖaani* shin of lamb.
موزاية *mozaaya* /n pl *-aat*/ = *mooza*.

م و س
موس *muus* /n pl *ʃamwaas, miwaas*/ razor blade. ‖*(ʈaalib) muus* swot, grind.

م و ض
موضة *mooɖa* <It *moda*> /n pl *-aat*/ fashion, style. *ʈaaliɛ mooɖa l-yomeen dool* it's in fashion these days.

م و ع see م ى ع: *mawwaɛ, ʃitmawwaɛ*

م و ف
موف *moov, muuv* <Fr> /adj invar/ mauve.

م و ل [1]
مال *maal*[1] /n pl *ʃamwaal*/ **1** wealth, property. *ʃil-maal il-ɛaamm* public property. *zakki ɛan maal-ak* give alms that your wealth may be blessed. *maal ik-kunazi lin-nuzahi [prov]* ≈ what the miser hoards his heir will squander. *ʃil-maal is-saayib yiɛallim is-sirɋa [prov]* ≈ the hole calls the thief. **2** *[agric]* annual tax on agricultural land.
مالى *maali* /adj/ monetary, financial. *ʃis-sana l-maliyya* the fiscal year. *ɣaraama maliyya* cash fine. ‖*ʃawraaɋ maliyya* (1) banknotes. (2) stocks and shares certificates. *suuɋ il-ʃawraaɋ il-maliyya* the stock exchange.
ماليّة *maliyya* /n/ finance, monetary affairs. *wizaarit il-maliyya* the Ministry of Finance.
موّل *mawwil*[1] /vt/ to finance. -vn *tamwiil*; ava/pva *mimawwil*.
اتموّل *ʃitmawwil* /vi/ to be financed. -iva *mitmawwil*.

م و ل [2]
موّال *mawwaal* /n pl *mawawiil*/ song in popular tradition characterized by a prelude which is an improvisation on the formula *ya leel ya ɛeen* followed by a section in one of two rhyme-schemes (AAABA or AAABBBA); the singer draws out this section with improvisation and ornamentation. ‖*ʃil-ħuṣaan da lu maɛaaya mawwaal* that horse and I have quite a story to tell (i.e. we've been through a lot together).
موّل *mawwil*[2] /vi/ **1** to compose and/or sing *mawawiil*. **2** *[deris]* to speak incessantly and boringly. -vn *tamwiil*; ava *mimawwil*.

م و ن
مونة *muuna*ʔ /n pl *miwan*/ **1** mortar (for bricks). *muuna samra* mortar of mud and straw. **2** solder containing copper (used in brazing). *ʃil-liħaam bil-muuna* brazing. **3** ingredients (of a mixture). **4** parts, materials.
مؤنة *muʃna* /n pl *muʃan*/ provisions, stock, supply.
مؤونة *maʃuuna* = *muʃna*.
موّان *mawwaan* /n * and pl *mawwaana*/ **1** dealer in building supplies. **2** building worker whose job it is to carry mortar.
موّن *mawwin* /vt/ **1** to provision, supply with an allotted share (of goods). **2** to fuel. *ħa-nmawwin il-ɛarabiyya* we'll fuel the car. ‖*mawwin il-huguum [soccer]* to feed the attack (by passing the ball to the forwards). — /vi/ **3** to draw one's allotment of goods, draw one's rations. -vn *tamwiin*; ava/pva *mimawwin*.
تموين *tamwiin* /n pl *-aat*/ allotted share of goods, ration. *biʈaaɋit tamwiin* ration card. *mabaaħis it-tamwiin* government supply control office. *xuʈuuʈ il-ʃimdaad wit-tamwiin [mil]* supply lines.
تموينى *tamwiini* /adj/ pertaining to rationing. *ʃil-muqarraraat it-tamwiniyya* ration allocations.
اتموّن *ʃitmawwin* /vi/ passive of *mawwin* 1. -iva *mitmawwin*.

م و ه
موّه *mawwih* **1** /vt/ to camouflage. **2** /vi/ to feint. *bi-yaaxud il-koora w-bi-ymawwih bi-gism-u* he takes the ball and feints with his body. ‖*balaaf tamwiih ɛalayya* stop being evasive with me! -vn *tamwiih*; ava *mimawwih*.
اتموّه *ʃitmawwih* /vi/ to be camouflaged. -iva *mitmawwih*.

م ى ا س
مياس *miyaas* /n/ kind of Mediterranean fish.

م ى ت [1]
ميتة *meeta*[2] /conj/ *[non-Cairene]* when.

م ى ت [2] see م و ت: *mayyit, meeta*[1], *maytaan, mumiit*

م ى ت [3] see م ى ى [2]: *miit*

(م ى د)
ميدة *meeda* /n pl *miyad*/ **1** *[constr]* foundation girder. **2** *[naut]* keelson.

ميدان *midaan* /n pl *mayadiin*/ **1** public square. **2** field of battle. **3** sports track. *midaan sabaq* race track.

م ي ر

ميري *miiri* /adj invar/ **1** pertaining to the government. *ʔarḍ[i] miiri* government-owned land. *ʔin faat-ak il-miiri ʔitmarraɣ fi-traab-u [prov]* ≈ a government job, however base, is better than any other job. **2a** pertaining to the army. *laabis miiri* in uniform. **2b** militaristic and rigid, inflexible, obdurate. *kalaam miiri* (1) straightforward talk. (2) inflexibility of attitude or behaviour.

م ي ر و ن

ميرون *meeruun* <Gr *muron*> /n/ *[Chr]* chrismal oil.

م ي ز [1]

ميزة *miiza[1]* /n pl *-aat, miyaz*/ **1** merit, advantage. **2** characteristic, distinctive feature.

ميّز *mayyiz* /vt/ **1** to distinguish. *ʔit-taks[i] luu loon bi-ymayyiz-u ʕan il-ʕarabiyyaat* the taxi has a colour that distinguishes it from (other) cars. **2** to single out (for preferential treatment). *ma-tmayyiz-uu-ʃ ʕala xwaat-u* don't treat him better than his brothers. — /vi/ **3** to be sensitive. *ʔamma raagil ma-ʕanduu-ʃ tamyiiz bi-ṣaḥiiḥ* what a thick-skinned man! - vn *tamyiiz*; ava/pva *mimayyiz*.

ممّيز *mumayyiz*↑ /adj */ distinctive. *laḥn[i] mumayyiz* signature tune.

اتميّز *ʔitmayyiz* /vi/ **1** to be distinguished, be characterized. **2** to be given an advantage. - iva *mitmayyiz*.

امتاز *ʔimtaaz* /vi/ **1** to be excellent. *ʔimtaaz ʕan kull in-naas* he excelled everybody. **2** to be distinguished, be distinctive. - vn *ʔimtiyaaz*; ava *mumtaaz*.

امتياز *ʔimtiyaaz* /n/ **1** /no pl/ **1a** distinction, excellence. *ʔilli bi-ykassib il-ḥarb in-niẓaam wil-imtiyaaz* what wins war is order and high achievement. **1b** *[med]* internship. **2** /pl *-aat*/ privilege. ‖ *ʔil-imtiyazaat il-ʔagnabiyya [hist]* the Capitulations granted by the Sublime Porte to foreigners.

ممتاز *mumtaaz* /adj/ excellent. ‖ *rayyis mumtaaz* highest rank of a Nile boat captain. - *ʔid-duyuun il-mumtaaza* (1) low-interest debts. (2) *[hist]* Egypt's foreign debts of three and a half percent (under the Khedive Ismail).

م ي ز [2]

ميزة *miiza[2]* <Fr *mise*> /n/ kitty, pot (in gambling).

م ي س [1]

ميّس *mayyis* /vi/ to bluff one's way around. *ʔinta bi-tmayyis ʕala miin* who are you trying to take in? - vn *tamyiis*; ava *mimayyis*.

ميّاس *mayyaas* · /n * and pl *mayyaasa*/ **1** bluffer. **2** braggart.

م ي س [2]

ميس *mees* <Engl> /n/ *[mil]* mess.

ميس *miis* /n/ target or goal in several children's ball games. ‖ *ʕamlin-ni miis* they are always hitting at me.

م ي س [3] see م ي ا س : *miyaas*

م ي س ت –

مايسترو *mayistiru* <prob It *maestro*> /n pl *-haat*/ *[mus]* conductor.

م ي ص

ماص *maaṣ (i)* /vi/ to become pampered or spoilt. - vn *mayaaṣa, mayaṣaan*; ava *maayiṣ*.

ميّص *mayyaṣ* /vt/ to spoil, pamper. *ṣaḥb-ak mayyaṣ banaat-u w-ma-ʕad-ʃ[i] ʠaadir yilimm-u-hum* your friend was too soft with his daughters and now he can't control them. - vn *tamyiiṣ*; ava/pva *mimayyaṣ*.

اتميّص *ʔitmayyaṣ* /vi/ to be spoilt, be pampered. - iva *mitmayyaṣ*.

اتمايص *ʔitmaayiṣ* /vi/ to behave in a spoilt manner. - ava *mitmaayiṣ*.

م ي ض see و ض ى : *meeḍa*

م ي ع

ماع *maaʕ (i, u)* /vi/ **1** to become bland. *ʔif-furba maaʕit min kutr il-mayya* the soup has become tasteless because of being too watery. ‖ *nifs-i maaʕit lamma fribt if-farbaat* drinking the cordial made me feel queasy. **2** to behave in a spoilt manner. *baṭṭali mayaaʕa ya faṭra* stop behaving like a spoilt child, young lady! - vn *mayaaʕa, mawaaʕa, mayaʕaan, mawaʕaan*; ava *maayiʕ*.

ميّع *mayyaʕ* (also *mawwaʕ*) /vt/ **1** to cause to diminish or dwindle. *mayyaʕu l-mawḍuuʕ wi-sabuu l-ɣaayit ma maat* they played down the subject until (interest in) it died. **2** to cause to become bland. ‖ *ʔil-ʔakl[i] mayyaʕ nifs-i* the food made me feel queasy. - vn *tamyiiʕ, tamwiiʕ*; ava/pva *mimayyaʕ, mimawwaʕ*.

اتميّع *ʔitmayyaʕ* (also *ʔitmawwaʕ*) /vi/ passive of *mayyaʕ*. - iva *mitmayyaʕ, mitmawwaʕ*.

م ي غ

ميغة *meeɣa* /n/ chaos, utter confusion.

مايغ *maayiɣ* /adj */ mixed-up, chaotic.

– م ى ك ا see م ك ء ى ل : *miikaaʕiil*

م ى ل ¹

مال *maal*² *(i)* /vi/ **1** to incline, bend. *ʕil-waḥda tmiil bi-ras-ha wi-tḥaawil tilmis rukab-ha* one bends one's head and tries to touch one's knees. *ʕid-duktuur maal ɛalee* the doctor bent over him. *laqeet-u maayil ɛal-ḥeeṭa* I found him leaning against the wall. **2** to be inclined. *b-amil-lu ʕaktar* I prefer him. *qalb-i bi-ymiil liiha* I'm fond of her. ‖*baxt-u* (or *ḥaal-u) maal* his luck turned bad. - *ʕin maal ɛaleek iz-zaman mayyil ɛala draaɛ-ak [prov]* depend on yourself when times are bad. - vn *meel, mayalaan*; ava *maayil*.

ميل *meel*¹ /n pl *miyuul*/ **1** slant, angle. **2** inclination, liking, longing.

ميلة *meela* /pl *-aat*/ instance noun of *meel*. *ya meelit baxt-i [women]* how unlucky I am!

أميل *ʔamyal* /el/ more/most inclined or sympathetic (towards). *ʕin-naas dool ʔamyal liina min it-tanyiin* these people are more sympathetic towards us than the others.

ميّال *mayyaal* /adj */ inclined. *ʔana mayyaal qawi lis-sitt* I'm very fond of the lady.

ميّل *mayyil* **1** /vt/ to bend. *ʕil-hawa bi-ymayyil in-nabaat* the wind bends the plants. ‖*mayyil baxt(-u)* to cause (s.o.) to have a rotten deal (particularly in marriage). – /vi/ **2** to bend, lean. *ʕil-qiʃra l-xaḍra tmayyil li-taḥt' w-yiẓhar il-quṭn* the green outer skin curls downwards and the cotton appears. *mayyilt' w-saḥabt is-sikkiina min taḥt if-faraab* I bent down and pulled the knife out of my sock. *mayyil ɛalayya* lean towards me. **3** to be biased in one's judgement. *ma-tmayyil-ʃ' fiʃ-ʃihaada* don't deviate from the truth in your testimony. - vn *tamyiil*; ava/pva *mimayyil*.

اتميّل *ʕitmayyil* /vi/ to be caused to lean to one side. - ava/iva *mitmayyil*.

اتمايل *ʕitmaayil* /vi/ to sway. *maafi yitmaayil yimiin wi-ʃmaal* going rolling along. - ava *mitmaayil*.

استمال *ʕistamaal* /vt/ to win over, win the favour of. *ʕistamaal il-ɛaskari bis-sagaayir* he won over the policeman with cigarettes. - vn *ʕistimaala*; ava *mistimiil*.

م ى ل ²

ميل *miil, meel*² <Fr *mille*> /n pl *ʔamyaal*/ mile. *miil baḥari* nautical mile.

(م ى ن)

مين *miin*¹ /interrog pron/ who? *ʕinta miin* who are you? *miin il-mudiir* who is the director? *ɛand' miin* at whose place?

¶ *ya miin ...* oh for someone to .... *ya miin yiṭammin-ni ɛala ṣiḥḥit-ha* I am longing for someone to bring me (good) news of her health.

مين *miin*²: *been kull*ᵃ *ḥiin wi-miin* see *ḥiin*.

ميناء *miina*¹ /n pl *mawaani*/ port.

ميناء، مينا *miina*² /n/ **1** glaze, enamel. *maṭli bil-miina* enamel-coated. **2** /pl *-aat*/ watch dial.

م ى و ه

ميوه *mayooh* <Fr *maillot*> /n pl *-aat*/ bathing suit.

م ى ى ¹ see also م ا ء ¹

ميّة *mayya* /n/ **1a** water. ‖*raagil mayya min taḥt' tibn* a cunning sly man. - *rigɛit il-mayya l-magarii-ha* ≈ the quarrel has been patched up. - *mayyit-u garya* he has a lot of money. - *ʕil-mayya tkaddib il-ɣaṭṭaas [prov]* (the water gives the lie to the diver) ≈ the proof of the pudding is in the eating. - *bi-yitkallim ʕingiliizi mayya* he speaks fluent English. - *mayyit naar* any strong acid. - *ɛamal* (or *faxx'*) *mayya* to urinate. - *doorit mayya* lavatory. - *fuxl' ɛala mayya beeḍa* honest work. **1b** (any) liquid. ‖*mizaan mayya* spirit level. - *ʕil-mayya z-zarqa* glaucoma. - *ʕil-mayya l-beeḍa* leucoma. **1c** juice, sap. *ʕil-lamuun malyaan mayya* the lemons are very juicy. **1d** navigable river channel. **1e** *[euphem slang]* wine and spirits. **2** cutting edge. *bi-yaakul fi-mayyit il-muus* it wears down the edge of the razor blade. **3** mood. *fuuf mayyit-u ʕeeh* sound him out. *mayyit is-suuq* the state of the market.

م ى ى ²

ميّة *miyya* **1** /num; constr *miit*, dual *miteen*/ a hundred. *miyya w-ɛiʃriin* one hundred and twenty. *miteen wi-xamsiin* two hundred and fifty. *miit gineeh* a hundred pounds. **2** *ʕil-miyya* /adj invar/ the one-hundredth. **3** /n pl *-aat*/ (unit of a) hundred. *naas bil-miyyaat* people in hundreds. *xamastaafar fil-miyya* fifteen percent. ‖*fuxl' miyya (fil-)miyya* top quality work. - *miyya miyya* or *miyya l-miyya* certainly, definitely.

ن

ن ا ب

ناب *naab'* /n pl *niyaab, nuub, ʕanyaab/* canine, tooth, fang. ‖*naab-u ʕazraq* (or *zaariq*) he's wily and cunning. - *qaraq ɛala naab-u* he became furious.

ن ا ر see **ن و ر ١** : *naar, naari*

ن ا س

ناس *naas* /n, functioning either as fem sing or as pl/ **1** group of people. *naas kitiir gat-lak* (or *guu-lak*) a lot of people came to see you. *ʕiḥtirim in-naas illi bi-tkallim-ak* (or *bi-ykallimuu-k*) show respect to those talking to you. *ʕin-naas illi trabbeet maɛaahum* (or *maɛaaha*) the people with whom I grew up. *fii naas ṣanayɛiyya b-tilbis ɛafriita* there are some craftsmen who wear overalls. ‖ *ʕibn'* (or *bint'*) *naas* a young man (or girl) of good family. - *ɛarabiyya bint' naas* a good reliable car. - *ḥaaga kwayyisa wi-rxayyiṣa w-bint' naas* (something good in quality, cheap in price and of good origin) ≈ something good, cheap, and reliable. - *sitt' min naas zamaan* a lady of the old school. **2** people in general, mankind. *ma tismaɛ kalaam in-naas* why don't you do what people tell you! *rabb-i-na xtaar-u ɛafaan yihdi n-naas* Our Lord chose him to guide mankind. *ʕilḥaqu ya naas* help! ‖*ya naas* a rhetorical appeal for help, witness etc., addressed to no one in particular, as in *ḥadd' qaal kida ya naas* could anyone be so foolish! whoever would say such a thing! - *zayy in-naas* (1) like other people, as in *ʕiḥna mif zayy in-naas* we are not like other people. (2) properly, as in *ʕitkallim zayy in-naas* speak properly! - *ʕig-gabalaaya mif bayna min hina zayy in-naas* the hillock doesn't show up properly from here. - *ɛamal zayy in-naas [euphem]* to go to the lavatory. see further under **ن س و ت**

ن ا ف

ناف *naaf* /n pl *nuuf/* yoke (for a draught animal, e.g., see Pl.D, 11; E, 5).

ن ا ق see **ن و ق** : *naaqa*

ن ا ى

ناى *naay* /n pl *-aat/* end-blown reed flute.

نايانى *nayaati* /n pl *-yya/* player of the *naay*.

ن ب ء

نبأ *nabaʕ* /n pl *ʕanbaaʕ/* (item of) news. *da nabaʕ zayy iz-zift* that's a lousy piece of news. *nafrit ʕanbaaʕ* news bulletin, newscast. *wikaalit ʕanbaaʕ* news agency.

اتنبّأ *ʕitnabbaʕ* /vi/ to prophesy. *zimil-na tnabbaʕ bil-qanuun qabl' ma yiṭlaɛ* our colleague predicted the regulation before it came out. - vn *tanabbuʕ*; ava *mitnabbaʕ*. see further under **ن ب ى**

ن ب ا ل م see **ن ب ل م** : *nabaalim*

ن ب ب و ت

نبّوت *nabbuut* /n pl *nababiit/* long heavy stick, quarter-staff. ‖*bin-nabbuut* by force, using the big stick. - *nabbuut il-ɣafiir* /coll n/ halva sticks with sesame seed.

ن ب ت ١

نبت *nabat (i)* /vi/ to grow up, sprout. *nabatit-lu faɛra f-ɛeen-u* he got an ingrowing eyelash. ‖*fuul naabit* dried broad beans, soaked till they sprout. *furbit naabit* soup made from *fuul naabit* (given especially to the sick). - vn *nabataan, nabaat*; ava *naabit*.

نبات *nabaat* **1** /vn/ ‖*ɛaafu f-tabaat wi-nabaat wi-xallifu ṣubyaan wi-banaat* ≈ they lived happily ever after and bore both boys and girls (the traditional closing formula

of fairy-tales). **2** /coll n/ plant(s). ‖*sukkar in-nabaat* crystallized sugar (sold in lumps to be eaten as sweets).
نباتة *nabaata* /unit n, pl *-aat*/ a small plant. *ʕit-taqaawi di ma-ṭliʒ-ʃ' minha wala nabaata* not one little plant came up from these seeds.
نباتي *nabaati* /adj/ **1** vegetable. *niʃa nabaati* vegetable starch. *ʃalyaaf nabatiyya* vegetable fibres. **2** vegetarian.
نباتين *nabatiin* /n/ vegetable fat.
منبت *manbat* /n pl *manaabit*/ place of growth, source. *ʃil-faṣl' da manbat il-fasaad fil-madrasa* this class is the source of all the corruption in the school. ‖*manbat iʃ-faʒr* coronary band (of a horse).
نبّت *nabbit*[1] **1** /vt/ to cause to sprout. *bi-tnabbit il-fuul* she leaves the beans (in water) to sprout. **2** /vi/ to sprout. *bi-nsiib il-ʃarḍ' lamma l-fuul yinabbit* we leave the ground until the beans sprout. - vn *tanbiit*; ava *minabbit*.
اتنبّت *ʕitnabbit*[1] /vi/ passive of *nabbit*[1] 1. - iva *mitnabbit*.
استنبت *ʕistanbit* /vt/ to breed (plants). *wizaarit iz-ziraaʒa b-tistanbit kull' sana ʃaṣnaaf gidiida min il-quṭn' wil-ḥubuub* every year the Ministry of Agriculture develops new kinds of cotton and other seeds. - vn *ʕistinbaat*; ava/pva *mistanbit*.

ن ب ت [2]

نباتة *nibaata* /n/ sewing over a seam a second time for strengthening and neatening.
نبّت *nabbit*[2] /vt/ *[needlew]* to sew the seam of (a garment) a second time with fine stitches (by hand or on a machine). - vn *tanbiit*; ava/iva *minabbit*.
اتنبّت *ʕitnabbit*[2] /vi/ passive of *nabbit*[2]. - iva *mitnabbit*.

ن ب ت [3]

نبيذ *nibiit* /n/ wine.
نبيتي *nibiiti* /adj invar/ wine-red, maroon.

ن ب ت [4] see **ن ب ب و ت**: *nabbuut*

ن ب ت ش ى see **ن و ب [1]**: *nabatʃi, nobatʃi*

ن ب ح

نبح *nabaḥ (a)* /vi/ **1** to bark. *ʃik-kalb' dayman bi-yinbaḥ gamb' bet-na w-m-aʒraf-ʃ anaam* the dog is always barking next to our house and I can't get any sleep. **2** /vt/ to make hoarse, strain (the voice). *ʃil-waaḥid bi-yinbaḥ ṣoot-u ṭuul in-nahaar wil-ʃawlaad ya-ʃimma xumm' noom ʃaw ʃayaṭiin* one shouts oneself hoarse all day long but the kids stay fast asleep or behave like little devils. - vn *nabḥ, nibiiḥ, nabaḥaan*; ava *naabiḥ*; pva *manbuuḥ*.
نبحة *nabḥa* /pl *-aat*/ instance noun of *nabḥ*.
اتنبح *ʕitnabaḥ* /vi/ **1** to become hoarse. *bi-tsiib-u l-ʁaayit ma yitnibiḥ min il-ʁiyaaṭ* she leaves him till he is hoarse with crying. **2** (impersonal) passive of *nabaḥ* 1. *kull' ma yitnibiḥ ʁalee yiṭlaʒ gary* each time he is barked at he runs away. - iva *mitnibiḥ*.

ن ب ذ see **ن ب ت [3]** and **ن ب ز [1]**

ن ب ر [1]

نبرة *nabra*ʔ /n pl *-aat*/ timbre. *nabrit* (or *nabaraat) iṣ-ṣoot* the timbre of the voice. *ʕil-mafruuḍ il-mulaqqin tikuun nabaraat-u waḍḥa* the prompter should have a clearly modulated voice. *kaan bi-ykallim-ha b-nabra ḥaadda ḥabbiteen* he was talking to her in a rather sharp tone of voice.
منبر *mambar, mimbar* /n pl *manaabir*/ **1** *[Isl]* minbar, pulpit (in a mosque). **2** *ʕil-manaabir* /pl n/ *[obsol]* Egyptian political groupings formed in the Sadat era which facilitated the transition from a one-party to a multi-party system.

ن ب ر [2] see **م ن ب ا ر**: *mimbaar*

ن ب ر [3] see **ن ب ر و ه**: *nabaraawi*

ن ب ر و ه

نبروه *nabarooh* /prop n/ Nabarow, a small town in Daqahliya province, famous for its salted fish.
نبراوي *nabaraawi* **1** /n pl *-yya*/ native of Nabarow. **2** /adj/ of or pertaining to Nabarow. *fisiix nabaraawi* (fine quality) *fisiix* from Nabarow.

ن ب ز [1]

نبذ *nabaz*[1] *(i)* /vt/ to spurn, ostracize, forsake. *kull in-naas nabazit-u ʁaʃaan lisaan-u ṭ-ṭawiil* everybody ostracized him because of his insolence. - vn *nabz, nabaẓaan*; ava *naabiz*; pva *manbuuz*.
نبذة *nabza* /pl *-aat*/ instance noun of *nabz*.
منبوذ *manbuuz* /adj */ rejected, outcast. ‖ *ʕil-manbuziin* the untouchables (of India).
نبذة *nubza* /n pl *-aat, nubaz*/ **1** introductory résumé. **2** tract, pamphlet.
اتنبذ *ʕitnabaz*[1] /vi/ to be spurned, be ostracized, be forsaken. - iva *mitnibiz*.

ن ب ز [2]
نبّز *nabbiz* /vi/ to make insinuations, speak slightingly. *kull[i] ma ʃaqʕud maʕaahum yinabbizu ʕaleeha b-kalaam* every time I sit with them they make snide remarks about her. - vn *tanbiiz*; ava *minabbiz*.
اتنبّز *ʃitnabbiz* /vi/ (impersonal) passive of *nabbiz*. *mif ʃana lli yitnabbiz ʕalee* I am not one to be spoken about slightingly. - iva *mitnabbiz*.

ن ب ز [3] see ن ب س : *nabaz[2]*

ن ب س
نبس *nabas* (also *nabaz[2]*) *(i)* /vi/ to utter, speak. *ʕaʕad fil-galsa ma-nabas-ʃ[i] b-kilma* he did not utter a word during the hearing. - vn *nabs, nabasaan*; ava *naabis*.
اتنبس *ʃitnabas* (also *ʃitnabaz[2]*) /vi/ (impersonal) passive of *nabas*. *ma-tnabas-ʃ[i] b-kilma fil-mawḍuuʕ* not a word was said on the subject. - iva *mitnibis*.

ن ب ش
نبش *nabaʃ (i)* /vt/ to dig up, rummage in, scrabble in. *ʕaʕad yinbiʃ (f)ik-karakiib li-ɣaayit ma laʕa l-muftaaḥ* he rummaged around in the odds and ends until he found the key. - vn *nabaʃaan, nabʃ*; ava *naabiʃ*; pva *manbuuʃ*.
نبشة *nabʃa* /pl *-aat*/ instance noun of *nabʃ*.
اتنبش *ʃitnabaʃ* /vi/ passive of *nabaʃ*. *ʃil-ʕabr itnabaʃ* the grave was desecrated. - iva *mitnibiʃ*.
نبّش *nabbiʃ* /vi/ **1** to scratch (at s.th.). *ʕaʕad yinabbiʃ fiṭ-ṭarabeeza l-ɣaayit ma bawwaẓ il-ʕiʃra* he kept scratching away at the table till he ruined the veneer. **2** to make enquiries, try to find out. *lissa bi-ynabbiʃu wara* (or *ʕala*) *l-ḥagaat illi tsaraʕit min faʕʕit-hum* they're still trying to track down the things that were stolen from their flat. - vn *tanbiiʃ*; ava *minabbiʃ*.

ن ب ض
نبض *nabaḍ (u)* /vi/ to palpitate, beat, pulse. *ʕalb-u lissa b-yunbuḍ* his heart is still beating. - vn *nabḍ, nabaḍaan*; ava *naabiḍ*.
نبض *nabḍ* /n/ pulse. ‖*gass[i] nabḍ-u* (1) he took his pulse. (2) he felt him out, he explored his attitude.
نبضة *nabḍa* /inst n, pl *-aat*/ a pulse, a beat. *ʃin-nabḍ iṭ-ṭabiiʕi lil-ʕalb itneen wi-sabʕiin nabḍa* the heart normally beats seventy-two times (per minute).

ن ب ط
نبّط *nabbaṭ* /vi/ to make insinuations, drop hints. *ʕaʕid yinabbaṭ miṣ-ṣubḥ[i] wi-yrammi kalaam min ɣeer ma yʕuul ʕa-lli huwwa ʕayz-u biẓ-ẓabṭ* he's been beating about the bush hinting and insinuating things for ages without spelling out what he really wants. - vn *tanbiiṭ*; ava/pva *minabbaṭ*.
اتنبّط *ʃitnabbaṭ* /vi/ (impersonal) passive of *nabbaṭ*. *mif dool illi yitnabbaṭ ʕaleehum* these (people) are not the type to have insinuations made about them. - iva *mitnabbaṭ*.
استنبط *ʃistanbaṭ* /vt/ to infer, deduce. *ʃistanbaṭt[i] min kalam-hum ʃinnuhum ṭalʕiin riḥla* I gathered from what they said that they were going to go on a trip. - vn *ʃistinbaaṭ*; ava *mistanbaṭ*.

ن ب ع
نبع *nabaʕ↑ (u)* /vi/ to spring (from a source). *ʃir-raqṣ iʃ-ʃarqi naabiʕ min il-bii'a* oriental dancing is a product of its environment. - vn *nabʕ, nabaʕaan*; ava *naabiʕ*.
منبع *manbaʕ* /n pl *manaabiʕ*/ source, origin. *manaabiʕ in-niil* the sources of the Nile. *ʃibʕid ʕannu da manbaʕ fasaad* stay away from him, he's a source of evil! *ʃiḍ-ḍariiba titxiṣim min il-manbaʕ* the tax is deducted at source.
ينبوع *yanbuuʕ* /n pl *yanabiiʕ*/ spring, well.

ن ب غ
نبغ *nabaɣ↑ (u)* /vi/ to excel, distinguish oneself. *da naabiɣ fil-mazziika* he excels at music. - vn *nubuuɣ*; ava *naabiɣ*.
نابغ *naabiɣ↑* /adj * and pl *nawaabiɣ*/ outstanding, brilliant.
نابغة *nabɣa* /adj pl *nawaabiɣ*/ of genius. *ʕaalim nabɣa xtaraʕ ir-radyu* an outstanding scientist invented the radio.
أنبغ *ʃanbaɣ* /el/ more/most outstanding or brilliant.

ن ب ق
نبق *nabq, nabaq* /coll n/ jujube(s), jujube fruit. ‖ *ʃilli sabaq kal in-nabaq* (he who comes first eats the jujube) ≈ first come, first served.
نبقة *nabqa, nabaqa* /unit n, pl *-aat*/ a jujube.
نبقاية *nabqaaya, nabaqaaya* = *nabqa*.

ن ب ل [1]
نبل *nibl* /coll n/ catapult(s), sling-shot(s).
نبلة *nibla* /unit n, pl *nibal, niblaat*/ a catapult, a sling shot.
نابل *naabil: ʃil-ḥaabil ʕala n-naabil* see *ḥaabil*.

ن ب ل [2]
نبل *nubl* /n/ magnanimity, nobility.
نبيل *nabiil* /adj pl *nubala*/ magnanimous, noble.

أنبل ʕanbal /el/ more/most magnanimous or noble.

ن ب ل س

نابلس nablus /prop n/ Nablus, a town west of the river Jordan and north of Jerusalem.

نابلسى nabulsı /adj */ from or pertaining to Nablus. ‖*ṣabuun nabulsi* a fine toilet soap made with olive oil.

ن ب ل م

نابالم nabalm (also *nabaalim*) <Engl> /n/ napalm.

ن ب ل ى ا see م ب ل ى ا : *nabulya*

ن ب ه

نباهة nabaaha /n/ cleverness, intelligence.

نبيه nabiih /adj pl *nubaha*/ clever, intelligent.

أنبه ʕanbah /el/ more/most clever or intelligent.

نبّه nabbih /vt/ to alert. *fii xaṭar kibiir ʕana ɛaawiz ʕanabbıh-ak lii* there is a grave danger to which I want to draw your attention. - vn *tanbiih*; ava *minabbih*.

¶ *nabbih ɛala* to serve notice on. *nabbıhu ɛalayya ʕaḥḍar ıg-galsa bukra* they served notice on me to attend the session tomorrow.

تنبيه *tanbiih* /n pl *-aat*/ **1** announcement. **2** warning.

منبّه *minabbih* /n pl *-aat*/ alarm clock.

اتنبّه ʕitnabbih /vi/ **1** to become aware or alert. *ʕitnabbıht' mın noom-ı ɛala ʃwayyit ɛiyaal ɛammaliin yiɛaksuu-ni* I woke up to find some kids trying to annoy me. *ʕil-ḥukuuma tnabbıhit li-qıllit ıl-maḥṣuul* the government woke up to the crop shortage. **2** to be alerted. - vn *tanabbuh*; ava/iva *mitnabbih*.

¶ *ʕitnabbih ɛala* passive of *nabbiḥ ɛala*. *ʕitnabbih ɛalee yiḥḍar il-maḥkama* notice was served on him to attend the court.

انتبه ʕintabah /vi/ to take notice, pay attention. *laazim yizaakır wi-yintibih li-mustaqbal-u* he must study and pay attention to his future. *bı-yfıdd intibaah in-naas lii* he draws people's attention to himself. - vn *ʕintibaah*; ava *mıntibih*. see further under ت ب ه

انتباه ʕintıbaah /interj/ *[mil]* attention!

استنبه ʕistanbih **1** /vt/ to select for intelligence and skill. *ʕistanbih tilmiiz wi-bɛat-u yıgmaɛ maɛlumaat lil-magalla* find a bright pupil and send him to collect information for the magazine. **2** /vi/ to act the wise guy. - ava *mıstanbih*.

ن ب و see ن ب ى : *nabawi, nibuwwa, nubuwwa*

ن ب ى see also ن ب ء

نبى *nabi* /n/ **1** /pl *ʕanbiyya, ʕanbiya, ʕanbiyaaʔˆ*/ prophet. **2** *ʕin-nabi* the Prophet Muhammad. ‖*win-nabi* used as *w-allaahi* (q.v.). - (*ʕism) in-nabi ḥars-u [women in trad soc]* may the Prophet's name protect him! (used with, or instead of, a child's name to ward off the evil eye). - *da-ḥna zar-na n-nabi* (it is as though the Prophet had visited us!) we are greatly honoured by your visit! - *ʕin-nabı tabassam* (even) the Prophet smiled! (to get a smile from a girl in the street).

نبوى *nabawi* /adj/ pertaining to the Prophet Muhammad. *ʕis-siira n-nabawiyya* the biography of the Prophet.

نبوّة *nibuwwa, nubuwwa* /n/ **1** prophethood. *bi-yiddiɛı n-nubuwwa* he claims to be a prophet. **2** /pl *-aat*/ prophecy.

نبّى *nabba*: *win-nabi wi-lli nabba n-nabi nabi [women in trad soc]* by the Prophet and Him Who made the Prophet a prophet! (a strong oath).

ن ت ت ¹

نتّ *natt (i)* /vi/ to grunt. *baqa maafi ynitt' bif-feela* he was going along grunting because of the load (he was carrying). - vn *natt, natataan*; ava *naatit*.

نتّة *natta* /inst n, pl *-aat*/ a grunt.

ن ت ت ²

نتّ *nitt* <Fr *net*> **1** /adj invar/ spot-on, on-target. *ḥall' nitt* exactly the right solution. - /adverbially/ *ṭiliɛ nitt* it turned out just right. ‖*nitt in-nıtt* sparkling clean, as in *ḥ-axalli ɛarabiyyit-ak nıtt in-nitt* I'll fix your car so that it shines. **2** /n/ *[phot]* focus. - /adjectively/ *ʕiṣ-ṣuura ma-hiyyaa-ʃ nitt* the picture is not focussed.

ن ت ج

نتج *natag (i, u)* /vi/ to result. *bi-yuntug ɛan il-ʕazma ɣala ʕasɛaar* the result of the shortage is a rise in prices. *ṣada naatig ɛan ir-ruṭuuba* rust resulting from the damp. - vn *natg, natagaan*; ava *naatig*.

ناتج *naatig* /n pl *nawaatig*/ resultant, product. *naatıg il-qisma [math]* quotient.

منتوج *mantuug* /n pl *-aat*/ product.

نتاج *nitaag, nataag* /n/ *[agric]* produce, yield (in crops or livestock).

نتيجه *natiiga* /n pl *nataayıg*/ **1** result, outcome. *natiigit imtiḥaan* examination result. **2** calendar. *natiigit ḥeeṭ* a wall calendar.

¶ *natıgit ʕinn* /conj/ as a result of the fact that.

نتّاج *nattaag* /adj pl *nattaaga*/ productive.

اتنتج ʕitnatagˆ /vi/ to result, be caused. *ʕitnatag ɛannu kalaam faarıɣ kitiir* a lot of nonsense resulted from it. - ava/iva *mitnitig*.

أنتج ʕantag /vt/ to produce. *ʕiḥna b-nintig il-ʕisṭuwanaat wi-baɛdeen bi-nwazzaɛ-ha big-gumla* we produce the records and then distribute them wholesale. -/the literary passive form occurs/ *baɛdii bi-tuntag it-tamasiil* after this the casts are turned off. -vn *ʕintaag*; ava *muntig*; pva *muntagˤ*.

إنتاج *ʕintaag* /n/ production, output. *ʕil-ʕintaag il-kulli lil-muʕassasa* the over-all oútput of the organization.

إنتاجي *ʕintaagiˤ* /adj/ pertaining to production, productive. *ṭaaqa ʕintagiyya* productive capacity.

منتج *muntig* **1** /n */ producer. **2** /adj */ industrious.

منتجات *muntagaat* /pl n/ products. *muntagaat ziraɛiyya* agricultural products. *muntagaat ṣinaɛiyya* industrial products.

استنتج *ʕistantig* /vt/ to deduce. *huwwa lli stantig il-ḥall[i] l-waḥd-u min ɣeer musaɛda* he deduced the solution alone without any assistance. -vn *ʕistintaag*; ava *mistantig*.

استنتاج *ʕistintaag* /n pl *-aat*/ inference. *da stintaag walla-nta fiɛlan ʃuft-u* is this a deduction you have made or have you actually seen him?

ن ت ر

نثر، نَثَر *natar (u)* /vt/ **1** to scatter, strew, broadcast. *bi-nuntur is-sibaax bil-fuus* we scatter the fertilizer with hoes. **2a** to jerk. *ʕil-ɛagala nizlit fi-maṭabb[i] w-raaḥit mantuura* the wheel went into a pothole with a bump. *ʕil-qaṭr[i] wiqif marra waḥda fa-naṭar kull in-naas li-quddaam* the train came to a sudden stop and jerked all the people forwards. **2b** to toss. *bi-yunṭur il-muftaaḥ fi-ʕiid-u* he's tossing the key in his hand. *natart-u bɛiid* I tossed it far away. — /vi/ **3** to jerk out, spring out, eject. *fii susta taḥt il-musmaar fa-ʕawwil ma tliff-u yuntur* there is a spring beneath the screw and, as soon as you turn it, it jumps out. *susat natr* ejector springs. ‖*faxaṭ wi-natar* to shout and gesticulate. -vn *natr*; ava *naatir*; pva *mantuur*.

نثرة، نترة *natra* /inst n, pl *-aat*/ a jerk, a toss, a scattering.

منثور، منتور *mantuur* /coll n/ stock(s), gillyflower(s).

انثر، انتثر *ʕitnatar* /vi/ **1** passivc of *natar* 1 and 2. **2** = *natar* 3. - ava/iva *mitnitir*.

نثّر، نَثَّر *nattar* /vt/ **1** to scatter widely, scatter successively. *nattar iz-zabaayin fiṣ-ṣaala* he seated the customers about the room. *nattar is-sibaax fil-ɣeeṭ* he scattered the fertilizer over the field. **2** to toss up and down, toss repeatedly. -vn *tantiir*; ava/pva *minattar*.

انثّر، انتثّر *ʕitnattar* /vi/ **1** to be scattered widely, be scattered successively. **2** to be tossed up and down, be tossed repeatedly. -iva *mitnattar*.

ن ت ر ا ت

نترات *nataraat, nitraat* <Fr *nitrate*> /n/ nitrate. *nataraat faḍḍa* silver nitrate.

ن ت ر ي ك

نتريك *nitriik* <Fr *nitrique*>: *ḥaamiḍ in-nitriik* /n/ nitric acid.

ن ت ر ي ل

ناتوريل *natureel* <Fr *naturel*> /adj invar/ natural.

ن ت ش

نتش *nataʃ (i)* /vt/ **1a** to snatch, grab. *nataʃt il-qalam min ʕiid-u* I snatched the pencil from his hand. *nataʃ il-ɤadwa w-qaam* he gulped down the lunch and left. **1b** to purloin, swipe. *qallibt-u w-nataʃt[i] minnu l-maḥfaẓa* I ran through his pockets and swiped his wallet. **2** to snatch at, catch at. *ʕik-kursi fii musmaar nataʃ banṭaloon-i* there is a nail in the chair that snagged my trousers. *ʕil-maṭabb[i] yintiʃ il-ɛagala truuḥ manṭuura* the pothole catches the wheel and it gives a jerk. *ʕil-maqaṣṣ it-tilim bi-yintiʃ if-faɛr* blunt scissors catch in the hair. **3** to deal (e.g., a blow) to. *nataʃt-u qalam xalla wdaan-u tṣaffar* I dealt him a slap on the face that made his ears ring. — /vi/ **4** to speak in a curt or abrupt manner, snap. *ma-tintiʃ-fˤ[i] ya beeh* don't snap (at me), sir! **5** to fabricate tales that reflect well on oneself, tell cock-and-bull stories of one's exploits. -vn *natafaan, natʃ*; ava *naatiʃ*; pva *mantuuʃ*.

نتسة *natʃa* /pl *-aat*/ instance noun of *natʃ*.

أنتش *ʕantaʃ* /el/ **1** more/most boastful. **2** more/most magnificent. *di ʕantaʃ ɛarabiyya fiʃ-ʃirka* this is the most luxurious car in the company.

نتّاش *nattaaʃ* /n */ **1** thief. *beet in-nattaaʃ ma-yiɛlaa-ʃ [prov]* a thief never prospers. **2** braggart.

انتتش *ʕitnataʃ* /vi/ passive of *nataʃ*. - iva *mitnitiʃ*.

نتّش *nattiʃ* /vt/ **1** to snatch or grab repeatedly. ‖ *ʕin-naas ɛammaliin yinattiʃu laḥm-i b-sabab-ak* people are gossiping about me because of you. **2** to snatch at or catch at repeatedly. -vn *tantiiʃ*; ava/pva *minattiʃ*.

تناتيش *tanatiiʃ* /pl n/ odds and ends, bits and pieces. *lissa ɛalayya tanatiiʃ filuus* I still have a few small debts to settle. *simiɛt[i] tanatiiʃ kalaam* I heard some bits of gossip.

انتتّش *ʕitnattiʃ* /vi/ passive of *nattiʃ*. - iva *mitnattiʃ*.

ن ت ع

نتع *nataɛ (a)* /vt/ **1** to heave (a heavy weight) with a jerk. *miʃ qaadir yintaɛ ik-kursi mil-ʕarḍ* he is unable to lift the chair an inch off the floor. **2** to deal a heavy blow

to. *raaḥ nataɛ-u ʃalluut ʃaal-u min ɣal-ʃarḍ* he upped and gave him a kick in the pants that sent him flying. **3** to relieve (s.o.) of a heavy weight. ‖*rabb-i-na yintaɛ-ik bis-salaama [women]* may Our Lord deliver you safely (to a pregnant woman). - vn *nataɛ*, *nataɛaan*; ava *naatiɛ*; pva *mantuuɛ*.

نتعة *nataɛa* /pl *-aat*/ instance noun of *nataɛ*. *nataɛ il-baab nataɛa xalaɛit-u* he gave the door a wrench that tore it off its hinges.

انتنع *ʃitnataɛ* /vi/ passive of *nataɛ*. - iva *mitnitiɛ*.

نتّع *nattaɛ* **1** /vt/ to wrench or jolt repeatedly. *wi-huwwa bi-yḥaawil yifiil if-ʃiwaal qaɛad yinattaɛ fii li-ɤaayit ma lawaḥ ḍahr-u* trying to lift up the sack he kept on heaving at it until he strained his back. **2** /vi/ to struggle to do something. *baqa maafi ynattaɛ biʃ-ʃeela* he was going along practically collapsing under the load. *bi-ynattaɛ fik-kitaaba* he can write only with difficulty. - vn *tantiiɛ*; ava/pva *minattaɛ*.

انتنّع *ʃitnattaɛ* /vi/ passive of *nattaɛ* 1. - iva *mitnattaɛ*.

ن ت ف

نتف *nataf (i)* /vt/ **1** to pluck (hair, feathers etc.). *natafit il-farxa* she plucked the chicken. *natafit wiʃʃ-a-ha bil-ḥalaawa* she removed the hair from her face with depilatory paste. **2** to strike. *natafi-tu ɣalqa kwayyisa* I gave him a good beating. - vn *natf*, *natafaan*; ava *naatif*; pva *mantuuf*.

نتفة *natfa* /pl *-aat*/ instance noun of *natf*.

نتّفة *nitfa* /n pl *-aat*, *nitaf*/ **1** small piece, fraction. *ʃeeh in-nitfa lli-nta b-tiddi-haa-li di* what is this tiny piece you are giving me! **2** *nitfit ... [slang]* a fine specimen of .... (*ḥittit (diin)) nitfit farxa* a very delicious chicken. *ḥittit (diin) nitfit bint* a gorgeous girl, a very sexy girl.

انتتف *ʃitnataf* /vi/ **1** to be plucked (of hair, feathers etc.). *ʃil-faras il-hadya yitnitif ḍel-ha [prov]* (the quiet mare gets its tail plucked) a timorous person will be taken advantage of. **2** to be struck. - iva *mitnitif*.

نتّف *nattif* /vt/ **1** to pluck with repeated movements. **2** to separate into small fragments. - vn *tantiif*; ava/pva *minattif*.

انتتّف *ʃitnattif* /vi/ passive of *nattif*. - iva *mitnattif*.

ن ت ن

نتن *nitin* /adj * and pl *nutana*/ **1** stinking, putrid. ‖*ʃik-kibiir in-nitin* the (unlucky) dice combination of a one and two (in backgammon). **2** stingy, mean. *ʃuuf in-nitin mistaxṣar fiyya kubbaayit ʃaay* the rotten miser won't even buy me a glass of tea!

نتنة *nitna* /n/ name given to various plants of the goosefoot family.

أنتن *ʃantan* /el/ **1** more/most putrid or rotten. **2** more/most stingy or mean.

نتانة *nataana* /n/ **1** putridness, rottenness. **2** stinginess, meanness. *baṭṭal nataana* don't be such a mean so-and-so!

منتنة *mintina* = *nitna*.

نتّن *nattin* **1** /vt/ to cause to turn putrid. *ʃil-ḥarr' nattin-u* the heat turned it putrid. **2** /vi/ to turn putrid. *ʃil-laḥma nattinit* the meat turned putrid. *buqq-u nattin min ig-guuɛ* his breath turned foul from lack of food. - vn *tantiin*; ava *minattin*.

ن ت و ر

نتور *natwar* /vt/ to scatter, strew. *laaqit il-hiduum minatwara f-kull' makaan* she found the clothes strewn all over the place. - vn *natwara*; ava/pva *minatwar*.

انتتور *ʃitnatwar* /vi/ to be scattered, be strewn. - vn *tinatwiir*; iva *mitnatwar*.

ن ت ى

ن ت ء [1] see : *nitaaya*

ن ث ر

ن ت ر and [3] ن س ر see

[1] ن ج ب

نجب *nagab (i)* /vt/ *[rur]* to summon, invite. ‖*ḥadd' nagab-ak* has anyone asked your opinion? - vn *nagabaan*; ava *naagib*.

نجّاب *naggaab* /n pl *nagagiib, naggaaba, naggabiin*/ *[rur]* messenger sent from family to family to announce the death of a relative.

[2] ن ج ب

نجب *nigib* /adj */ smart-alecky.

أنجب *ʃangab'* /el/ more/most excellent or distinguished.

نجابة *nagaaba* /n/ **1** outstanding ability. **2** smartness, slickness. *baṭṭal nagaaba wi-kkallim kuwayyis* stop trying to be smart and talk properly!

نجيب *nagiib* /adj pl *nugaba*/ excellent, distinguished. *tilmiiz nagiib* a bright and industrious student.

ناجب *naagib* /adj * and pl *nugaba*/ **1** outstandingly able. **2** smart-alecky.

اتناجب *ʃitnaagib* /vi/ to act the smart-aleck. - ava *mitnaagib*.

أنجب *ʃangab[2]* /vt/ to give birth to. *ʃangabit-lu talat wilaad* she bore him three boys. - vn *ʃingaab*; ava *mungib*.

استنجب *ʃistangib* **1** /vt/ to select for outstanding ability. **2** /vi/ to act the smart aleck. - vn *ʃistingaab*; ava *mistangib*.

ن ج ح

نجح *nagaḥ* or *nigiḥ (a)* /vi/ **1** to succeed, be successful. *mafhumiyyit-i lil-mafruuʕ ʔinnu miʃ ḥa-yingaḥ* as I understand the project, it will not come off. **2** to pass (in an examination). *ʔinta ḥa-tingaḥ wi-ḥa-tgiib magmuuʕ bi-ʔiẓn illaah* you'll pass and get a (good) grade, God willing. *nigiḥt fik-kaʃʃ iṭ-ṭibbi* I passed the medical. - vn *nagaaḥ*; ava *naagiḥ*.

نجاح *nagaaḥ* /n/ success. ‖ *ʔistimaarit nagaaḥ [acad]* form stating that a student has passed a certificate exam (e.g., the secondary general (*sanawiyya ʕaamma*) examination) and showing details of his marks.

ناجح *naagiḥ* **1** /n */ successful candidate. **2** /adj */ successful.

أنجح *ʔangaḥ* /el/ more/most successful.

نجّح *naggaḥ* /vt/ to cause to succeed. *rabb-i-na ynaggaḥ maqaṣd-ak* may God grant you success in your aims! - vn *tangiiḥ*; ava *minaggaḥ*.

اتنجّح *ʔitnaggaḥ* /vi/ **1** to be made to succeed. **2** to be made to pass (an examination). *ʔitnaggaḥit bil-ʕafya* it was with great difficulty that she was got through the exam. - iva *mitnaggaḥ*.

ن ج د [1]

نجّد *naggid* /vt/ **1** to upholster. *ʔik-kanaba twassaxit xaaliṣ wi-laazim ʔanaggid-ha* the sofa has become very dirty and I must have it re-upholstered. **2** to tease out (compacted cotton) with a wire bow. - vn *tangiid*; ava/pva *minaggid*.

منجّد *minaggid* /n */ **1** upholsterer. **2** one who teases out compacted cotton with a wire bow.

منجّداتي *minaggidaati* /n pl *-yya/* = *minaggid*.

اتنجّد *ʔitnaggid* /vi/ passive of *naggid*. - iva *mitnaggid*.

ن ج د [2]

نجد *nagad (i)* /vt/ to help (s.o.) in an emergency, rescue, save. - vn *nagda*; ava *naagid*.

نجدة *nagda* **1** /vn/ ‖ *ʔifaarit nagda* a distress signal. *buliiṣ in-nagda* an arm of the police force that is available to help the public in any emergency. **2** /n pl *-aat/* rescue, rescue team.

اتنجد *ʔitnagad* /vi/ to be rescued, be saved. - iva *mitnigid*.

استنجد *ʔistangid* /vi/ to appeal for help. *ʔiḥna ruḥnaa-lu lamma stangid biina* we went to him when he asked for our help. - vn *ʔistingaad*; ava *mistangid*.

ن ج ر [1]

نجارة *nigaara* **1** /n/ carpentry, carpenter's trade. **2** carpentry-work.

نجّار *naggaar* /n */ carpenter. ‖ *naggaar xarasaana [constr]* carpenter who erects reinforced concrete shuttering. - *baab in-naggaar mixallaʕ [prov]* (the carpenter's door hangs awry) ≈ the cobbler's children are ill-shod.

نجّر *naggar* /vt/ **1a** to trim (a branch, a rough piece of wood). **1b** to knock the rough edges off (s.o.), give (s.o.) polish. **2** to work (wood), carpenter (wood). - vn *tangiir*; ava/pva *minaggar*.

اتنجّر *ʔitnaggar* /vi/ **1a** to be trimmed (of wood). **1b** to be given or acquire polish. **2** to be worked (of wood). - ava/iva *mitnaggar*.

ن ج ر [2] se ء ن ج ر : *ʔangar*

ن ج ز

نجّز *naggiz* /vt/ to execute, complete, carry out. *ʕawziin ʕummaal mumtaziin ʕafaan ninaggiz il-ʕamal* we want some excellent workers so as to be able to complete the job. - vn *tangiiz*; ava *minaggiz*.

اتنجّز *ʔitnaggiz* /vi/ to be executed, be completed, be carried out. - iva *mitnaggiz*.

أنجز *ʔangaz* = *naggiz*. - vn *ʔingaaz*; ava *mingiz, mungiz*↑.

استنجز *ʔistangiz* /vt/ to hurry up, speed up, hasten. - vn *ʔistingaaz*; ava *mistangiz*.

ن ج س

نجاسة *nagaasa* /n/ **1** *[usu Isl]* ritual impurity resulting from certain acts (e.g., sexual intercourse) or contact with certain impure things (e.g., faeces, urine). **2** uncleanness, defilement.

نجس *nigis* /adj */ **1** *[usu Isl]* **1a** in a state of *nagaasa*. **1b** capable of causing *nagaasa* (of certain acts and impure things). ‖ *ʔil-ʕaya ṭ-ṭifis lii ʔid-dawa n-nigis [prov]* a nasty disease requires a foul medicine. **2a** unclean, defiled. **2b** low, mean, base.

أنجس *ʔangas* /el/ more/most *nigis*.

منجوس *manguus* /adj * and pl *managiis/* vile, ruthless.

نجّس *naggis* **1** /vt/ *[usu Isl]* to make ritually unclean, defile. *ʔik-kalbi naggis il-mayya lamma ḥaṭṭi buuz-u fiiha* the dog made the water unclean by putting its snout in it. **2** /vi/ *[slang]* to become low, mean or base. *min yoom ma rgiʕti w-huwwa bi-ynaggis maʕaaya* ever since I've returned he's been playing dirty with me. - vn *tangiis*; ava/pva *minaggis*.

اتنجّس *ʔitnaggis* /vi/ to be made ritually unclean, be defiled. - iva *mitnaggis*.

استنجس *ʔistangis* /vt/ to reject for being ritually unclean. - ava *mistangis*.

ن ج ع
نجع *nagɛ* /n pl *nuguuɛ*/ village originally settled by bedouin (a term specific to Upper Egypt).

ن ج ف
نجف *nagaf* /coll n/ **1** decorative hanging light-fittings (especially ones with lustres or the like), chandeliers. ‖*leela nagaf*↓ a wonderful evening. **2** *[obsol]* hanging decorative lamps with more than one oil-glass.
نجفة *nagafa* /unit n, pl *-aat*/ a decorative hanging light-fitting (usually with lustres), chandelier.

[1] ن ج ل
نجيل *nigiil* /n/ any of a number of types of grass (including couch grass, Bermuda grass and orchard grass).
نجّل *naggil (i)* **1** /vt/ to free of *nigiil*. *laazim ninaggıl ig-gineena ɛafaan if-fagar yikbar* we should clear the garden of grass to let the trees grow. **2** /vı/ to grass, produce grass. *ʕig-gineena naggılit wıf-fagar kibir* the garden became grassy and the trees grew. - vn *tangiil*; ava *minaggil*.
اتنجّل *ʕitnaggil* /vi/ to be freed of *nigiil*. - iva *mitnaggil*.

[2] ن ج ل
نجل *nagl* /n pl *ʕangaal*/ **1** son. **2** *ʕangaal* /pl n/ (one's) children, offspring.

[3] ن ج ل see ء ن ج ى ل : *mangaliyya*

[4] ن ج ل see [1] م ن ج ل : *mangal, mangala*

[1] ن ج م
نجم *nagam (i)* /vt/ to jinx, put the evil eye on. *dool naas wiħfiin nagamuu-na w-ħasaduu-na* they are bad people, they've jinxed us and put the evil eye on us. - vn *nagm*; ava *naagim*; pva *manguum*.
نجمة *nagma* /inst n, pl *-aat*/ a jinx.
نجم *nigm* /n pl *nuguum*/ **1** *[astrol]* star, planet. *ħisaab in-nuguum* (or *in-nıgm*) horoscope. *nigm-u ɛaali* his star is riding high, he's in luck. **2** (also *nagm*) male film-star.
نجمة *nigma* /n pl *-aat, nuguum, niguum*/ **1** star. ‖*nigma ʕumm' deeel* comet. - *mın ın-nıgma* since the crack of dawn. - *warraa nuguum iḍ-ḍuhr* he made him see stars. - *bi-yɛidd in-nuguum* he's daydreaming. - *nıgmıt il-baħr* starfish. - *naʈʈit in-nigma [athl]* spread-eagle jump. - *ʃams' w-ɋamar wi-nguum* sparklers. - *nuṣṣ' nigma* motif in panelling (see Pl.G, 12). **2** (also *nagma*) female film-star.
نجمايه *nigmaaya* = *nıgma*.
نجمى *nigmi* /adj/ stellar.
اتنجم *ʕitnagam* /vi/ to be jinxed, become the victim of the evil eye. - iva *mitnigim*.
نجّم *naggim* /vi/ **1** to practise astrology. **2** *[joc]* to guess, surmise. - vn *tangiim*; ava *minaggim*.
منجّم *munaggim* /n */ astrologer. *kadab il-munaggimiin wa-law sadaɋu [prov]* the astrologers are (always) lying even when they foretell the future correctly (since that only happens by chance).
اتنجّم *ʕitnaggim* /vi/ (impersonal) passive of *naggim*. *miʃ di l-masaaʕil illi yitnaggim fiiha* these are not matters for guessing. - iva *mitnaggim*.

[2] ن ج م
منجم *mangam* /n pl *manaagim*/ mine, pit.

ن ج ه see م ن ج ه : *mangaha*

ن ج و see ن ج ى : *nagwa*

ن ج ى
نجى *naga, nigi (i, a)* /vi/ to survive, escape. *kaan fi-ʃutubiis ɛamal ħadsa w-naga* he was in a bus that was involved in an accident, but he survived. *naga b-gild-u* he escaped with his skin, he had a narrow escape. - vn *nagaah, nagayaan*; ava *naagi*.
نجاة *nagaah* /n/ escape. ‖*ħabl' nagaah* life-line. *ħizaam nagaah* life-belt.
نجوى *nagwa* /fem n, pl *-aat*/ innermost desire. *nagwaa-ya* or *nagwit-ı* my innermost desire. *yiɛlam bis-sirr' win-nagwa* He (God) knows every secret and desire.
منجاة *manga*[2] /n pl *manaagi*/ haven, refuge.
نجّى *nagga* /vt/ **1** to save, rescue. *ʕilaah-ı ynaggii-k [beggars]* God save you! (in asking for alms). **2** to give (s.o.) a treat after a period of austerity. *naggi nafs-ak bi-ʃakla kwayyisa* treat yourself to a good meal! - vn *tangiyya*; ava *minaggi*.
منجّى *munaggi* /n/ Saver, Rescuer (epithet of God). *ya munaggi* God preserve us!
اتنجّى *ʕitnagga* /vi/ **1** to be saved, be rescued. **2** to give oneself a treat after a period of austerity. - ava/iva *mitnaggi*.
ناجى *naaga* /vt/ to talk to (one's love or an intimate friend) softly and affectionately. - vn *minagiyya, munagaah*; ava *minaagı*.
اتناجى *ʕitnaaga* /vi/ **1** to speak in a soft and affectionate manner. **2** to be spoken to softly and affectionately. - ava/iva *mitnaagi*.

استنجى *ʃistanga* /vi/ to wash the anus and genitals after defecating (i.e. to save oneself from defilement). - vn *ʃistinga*; ava *mistangi*.

ن ح ت

نحت *naḥat (a)* /vt/ **1** to gnaw. *qaaʕid yinḥat (fi)l-ʕaḍma zayy il-kalb* he is gnawing away at the bone (just) like a dog. *xud-lak kuuz dura wi-nḥat-u* take a corn cob and gnaw it. **2** to hew, work, sculpt (stone). - vn *naḥt, naḥataan*; ava *naaḥit*; pva *manḥuut*.

نحت *naḥt* /n/ sculpture.

نحتة *naḥta* /pl *-aat*/ instance noun of *naḥt*.

نحّات *naḥḥaat* /n */ **1** stone-mason. **2** sculptor. **3** *[deris]* one who is given to gnawing bones. *ya faḥḥatiin ya naḥḥatiin [abus]* you hungry beggars!

اتنحت *ʃitnaḥat* /vi/ **1** to be hewn, be worked (of stone). **2** to be gnawed. - iva *mitniḥit*.

نحّت *naḥḥat* /vt/ **1** to cause to gnaw. **2** to gnaw hard or repeatedly. - vn *tanḥiit*; ava/pva *minaḥḥat*.

اتنحّت *ʃitnaḥḥat* /vi/ passive of *naḥḥat*. - iva *mitnaḥḥat*.

ن ح ح

نح *naḥḥ (i)* /vi/ to moan, whine. *ʃil-waad da kull[i] ma ḥadd[i] ykallim-u yʕayyaṭ wi-yniḥḥ* every time anyone says anything to that kid he starts crying and whining. - vn *naḥḥ, naḥaḥaan*; ava *naaḥiḥ*.

نحّة *naḥḥa* /inst n, pl *-aat*/ a whine, a moan.

ن ح ر

نحر *naḥar (a)* /vt/ **1a** to eat away, erode, corrode. *ʃil-mayya naḥarit il-xaʃab* the water rotted the wood. **1b** to affect deeply, get to, catch on the raw. *bukaa-ha naḥar ʕalb-i* her crying wrung my heart. *naḥartuu-ni bi-lli ʕamaltuu* you've made me quite mad by what you did. **2** to swindle, cheat (over money). *naḥaruu-na f-qiṭaʕ il-ʁiyaar* they robbed us when they charged us for the spare parts. **3**↑ to slaughter (an animal) by cutting the throat. ‖*yoom in-naḥr = ʕiid il-ʃaḍḥa* (q.v.). - vn *naḥr*; ava *naaḥir*; pva *manḥuur*.

منحر *manḥar* /n pl *manaaḥir*/ yoke (of a garment).

اتنحر *ʃitnaḥar* /vi/ passive of *naḥar*. - iva *mitniḥir*.

نحّر *naḥḥar* **1** /vt/ to eat away or erode extensively or repeatedly. *ʃis-suus ʕaʕad yinaḥḥar fid-dulaab li-ʁaayit ma wiʕiʕ* the woodworm kept eating away at the cupboard until it collapsed. **2** /vi/ to be very deeply affected emotionally. - vn *tanḥiir*; ava/pva *minaḥḥar*.

اتنحّر *ʃitnaḥḥar* /vi/ to be eaten away or eroded extensively or repeatedly. - iva *mitnaḥḥar*.

ناحر *naaḥir* /vt/ to be in constant conflict with. *ʃil-ʁiira bi-txallii-hum dayman yinaḥru (f-)baʕḍ* jealousy keeps them constantly at one another's throats. - vn *minaḥra*; ava/pva *minaaḥir*.

اتناحر *ʃitnaaḥir* /vi/ **1** to be in constant conflict (with one another). **2** to be disputed with. - ava/iva *mitnaaḥir*.

انتحر *ʃintaḥar* /vi/ to commit, or attempt to commit, suicide. - vn *ʃintiḥaar*; ava *mintiḥir*.

انتحارى *ʃintiḥaari* /adj/ suicidal, pertaining to suicide. *ʕamaliyyaat intiḥariyya* suicide missions.

ن ح س [1]

نحس *naḥas (a)* /vt/ to bring bad luck upon. *naḥast-i-ni min yoom ma geet tiftaʁal maʕaaya* you've brought me bad luck from the very day you started to work with me. - vn *naḥs, naḥasaan*; ava *naaḥis*; pva *manḥuus*.

نحس *naḥs* /n/ ill omen, bad luck. *kaanit saaʕit naḥs is-saaʕa lli ʕrift-u fiiha* it was an accursed hour in which I got to know him. - /adjectivally/ *sana naḥs* an ill-omened year.

منحوس *manḥuus* /adj * and pl *manaḥiis*/ luckless. *ʃil-manḥuus manḥuus wi-law ʕallaqu ʕala baab daar-u fanuus [prov]* a person who is (meant to be) unlucky remains unlucky (no matter what), even if they hang a lantern over the door of his house.

أنحس *ʔanḥas* /el/ more/most unlucky or ill-omened.

اتنحس *ʃitnaḥas* /vi/ to be brought bad luck. - iva *mitniḥis*.

نحّس *naḥḥis* /vi/ to become unlucky or plagued with misfortune. *ʃil-ḥaala naḥḥisit maʕaa wi-kull[i] yoom yixsar ʃaktar* things have got really bad for him and every day he loses more. - vn *tanḥiis*; ava/pva *minaḥḥis*.

ن ح س [2]

نحاس *naḥaas, niḥaas, nuḥaas*↑ /n/ **1** copper; particularized as *naḥaas ʃaḥmar*. **2** brass; particularized as *naḥaas ʃaṣfar*. — /coll n/ **3** copperware.

نحاسة *naḥaasa, niḥaasa* /n pl *-aat*/ **1** *[bank]* copper token bearing a serial number issued to a customer in a bank against a cheque or cheques handed in for cashing. **2** *[mus]* kettledrum. **3** a piece of copper or brass.

نحاسى *naḥaasi, niḥaasi, nuḥaasi*↑ /adj/ **1** made of copper or brass. *ʕumla naḥasiyya* copper coins. *ʃalaat nuḥasiyya [mus]* brass wind instruments. **2** coppery, brassy (in colour).

نحّس *naḥḥas* /vi/ to become like copper or brass (in colour or character). *raas-u naḥḥasit* his head (went bald and) turned a coppery colour. ‖*gild-u mnaḥḥas* he's tough, he's resilient. - ava/pva *minaḥḥas*.

ن ح ف

نحف *niḥif (a)* /vi/ to become thin, become emaciated. *wiff-ak niḥif fiwayya* your face has become somewhat thin. - vn *naḥaafa, naḥafaan*.

نحافة *naḥaafa* /n/ thinness, leanness, skinniness.

نحيف *naḥiif* /adj pl *nuḥaaf, nuḥafa*/ thin, lean, skinny. *ʔil-waad naḥiif ziyaada ɛan il-lizuum* the boy's too thin.

أنحف *ʔanḥaf* /el/ more/most thin, lean or skinny.

استنحف *ʔistanḥaf* /vt/ **1** to reject for being too thin. **2** to select for thinness. - ava *mistanḥaf*.

ن ح ل [1]

نحل *naḥal (a)* **1** /vt/ to wear bald, wear threadbare. *ʔid-dawa naḥal raas-i* the medicine made my hair fall out. *rukbit il-banṭaloon manḥuula* the knees of the trousers are worn out. **2** /vi/ to become threadbare. *ʔil-qamiiṣ naḥal mil-yaaqa* the shirt wore out at the collar. ‖*gism-i naḥal mil-ɛaya* my body became thin because of the illness. - vn *naḥl, naḥalaan*; ava *naaḥil*; pva *manḥuul*.

نحلة *naḥla* [1] /pl *-aat*/ instance noun of *naḥl. naḥalu raas-u naḥla sooda ma-xalluu-ʃ fiiha wala ʃaɛra* they really polished his head for him; there was not a hair left!

اتنحل *ʔitnaḥal* /vi/ to be worn bald, be worn threadbare. - iva *mitniḥil*.

ن ح ل [2]

انتحل *ʔintaḥal: ʔintaḥal ʃaxṣiyyit(-u)* to pose as (s.o.), take on (s.o.'s) identity. *ʔintaḥal ʃaxṣiyyit duktoor wi-ftaɣal fi-mustaffa* he masqueraded as a doctor and worked in a hospital. - vn *ʔintiḥaal*; ava *mintiḥil*.

ن ح ل [3]

نحل *naḥl* /coll n/ bee(s).

نحلة *naḥla* [2] /unit n, pl *-aat*/ **1** a bee. **2** a spinning top.

نحّال *naḥḥaal* /n * and pl *naḥḥaala*/ bee keeper.

منحل *manḥal* /n pl *manaaḥil*/ apiary.

ن ح ن

نحن *naḥnu* /pron of 1st pers pl/ we. *naḥnu huna* phrase used by youths in trying to attract the attention of girls in the street. *naḥnu huna ya sitt* phrase used by a husband to his wife, implying that she ignores his authority.

ن ح ن ح

نحنح *naḥnaḥ* /vt/ to take (a child) to defecate or urinate. *ruuḥ naḥnaḥ il-ɛayyil* take the kid to the bathroom. ‖ *ʔil-ɛarabiyya di naḥnaḥit-u w-ɣarramit-u dihn' ɋalb-u* this car drained him of every last penny he owned. - vn *naḥnaḥa*; ava/pva *minaḥnaḥ*.

اتنحنح *ʔitnaḥnaḥ* /vi/ to clear one's throat, say 'ahem'. - vn *tinaḥniiḥ*; ava *mitnaḥnaḥ*.

استنحنح *ʔistinaḥnaḥ* ↓ = *ʔitnaḥnaḥ*. - ava *mistinaḥnaḥ*.

ن ح و

نحو *naḥw* ↑ /n/ **1** grammar (of Arabic). **2** syntax (of Arabic). — /prep/ **3** towards, with respect to. *waagibat-hum naḥw' balad-hum* their duties towards their country.

نحوى *naḥwi* ↑ /adj/ **1** grammatical. **2** syntactical.

نحوجى *naḥwagi* /adj pl *-yya*/ *[deris]* given to speaking in elevated language.

نحوى *naḥawi* ↓ **1** /adj invar/ pompous, posh (of speech). *kalaam-u naḥawi* he talks posh. **2** *ʔin-naḥawi* /n/ posh elevated language. *bi-yitkallim bin-naḥawi* he talks posh.

ن ح ى

ناحية *naḥya* /n pl *nawaaḥi*/ **1** end, side. *ʔil-musmaar bi-yitribiṭ min in-naḥyiteen* the bolt is fastened at both ends. *wiɋift' fin-naḥya l-yimiin min if-faariɛ* I stood on the right-hand side of the street. *hiyya ɛamla zayy il-fallaaya min in-naḥyiteen* it looks like a fine-tooth comb at either end. **2** aspect, respect, regard. *min in-naḥya d-dawliyya* from the international point of view. *ʔiṭṭammin min naḥyit-ha* he was reassured as far as she was concerned. **3** /also pl *ʔanḥaaʔ* ↑/ place, locality. *ʔibn in-naḥya* a local, one from the locality. *fi-gamiiɛ ʔanḥaaʔ ig-gumhuriyya* in all parts of the republic.

¶ *naḥyit* /prep/ in the direction of, towards. *baṣṣ' naḥyit-ha* he looked towards her. *ʔiltafatt' naḥyit il-baab* I turned towards the door. *maama xaragit gary' naḥyit is-suuɋ* Mother rushed off in the direction of the market.

نحّى *naḥḥa (i)* /vt/ to put aside, remove. *ʔil-waziir naḥḥaa bɛiid li-suuʔ siluuk-u* the minister removed him (from his post) for his bad conduct. - vn *tanḥiyya, tanḥiya*; ava/pva *minaḥḥi*.

اتنحّى *ʔitnaḥḥa* /vi/ **1** to step aside, step down (from an office). **2** to be put aside, be removed. - ava/iva *mitnaḥḥi*.

ن خ ب [1]

نخب *naxb* /n pl *ʔanxaab*/ toast. *ʃiribna naxb iṣ-ṣadaaqa* we drank a toast to friendship.

نخبة *nuxba* /n pl *nuxab*/ selection, chosen group, select few. *dool nuxba mumtaaza min id-dakatra* these are a

select group of doctors.
ناخب *naaxib↑* /n */ elector.
انتخب *ʕintaxab* /vt/ **1** to vote for. *ʕana ntaxabt-u laakin ma-nagaḥ-ʃ* I voted for him but he was unsuccessful. **2** to elect. *ʕintaxabuu raʕiis il-lagna* they elected him chairman. — /the literary passive form occurs/ *ḥa-yuntaxab il-marra di* he will be elected this time. - vn *ʕintixaab*; ava *mintixib*; pva *muntaxab*.
انتخاب *ʕintixaab* /n pl *-aat*/ election.
انتخابي *ʕintixaabi* /adj/ electoral. *dayra ntixabiyya* electoral ward, constituency. *gawla ntixabiyya* election campaign tour.
منتخب *muntaxab* /n/ *[sport]* team selected from the best players of a number of clubs. *muntaxab il-gumhuriyya* the team selected from the various clubs in the Republic to form the national team.
استنخب *ʕistanxab↓* = *ʕintaxab*. - vn *ʕistinxaab*; ava *mistanxab*.

ن خ ب ²
نخب *naχab (i)* /vt/ to bore into. *ʕis-suus naxab if-fagara w-xarram-ha w-baɛd[i] fwayya ḥa-tuqaɛ* the woodworm have bored tunnels through the tree and it will soon fall. - vn *naxabaan*; ava *naaxib*; pva *manxuub*.
انتخب *ʕitnaxab* /vi/ to be bored into. - iva *mitnixib*.

ن خ خ
نخ *naxx (i)* /vi/ **1** to kneel (of a quadruped, particularly a camel). **2** to slow down or give way under pressure, become tired and yield. *ʕis-sitt ik-kibiira naxxit min kutr if-fuxl[i] w-ma-qidrit-ʃ[i] tkammil* the old woman gave way under the heavy work-load and could not continue. *ʕil-ɛarabiyya naxxit mil-maʃawiir* the car packed up from being run too much. - vn *naxx, naxaxaan*; ava *naaxix*.
نخّخ *naxxax* /vt/ **1** to cause a quadruped to kneel. **2** to cause to slow down or give way, cause to become tired and yield under pressure. *kutr if-fuxl[i] naxxax-u* the pressure of work made him flag. - vn *tanxiix*; ava/pva *minaxxax*.
انتخّخ *ʕitnaxxax* /vi/ passive of *naxxax*. - iva *mitnaxxax*.

ن خ ر ¹
نخر *naxar[1] (u)* /vi/ *[coarse]* to grunt, snort. - vn *naxr*; ava *naaxir*.
منخور *manxuur* = *minxaar*.
منخار *minxaar* /n pl *manaxiir*/ nostril, (loosely also) nose. *ʕir-raagil da minxaar-u kbiir qawi* this man has a very big nose.
مناخير *manaxiir* /pl n/ nose. *manaxiir-i sayba* my nose is running. ‖*gaab manaxiir-u fit-turaab* he humiliated him. - *rooḥ-u baqit fi-manaxiir-u* he became furious with exasperation. - *manaxir-hum fis-sama* their noses are in the air, they're stuck-up.

ن خ ر ²
نخر *naxar[2] (u)* /vt/ to bore into, burrow through. *ʕis-suus naxar sinaan-ak* decay has rotted your teeth. - vn *naxr*; ava *naaxir*; pva *manxuur*.
اتنخر *ʕitnaxar* /vi/ to be bored into, be burrowed through. - iva *mitnixir*.

ن خ ر ب
نخرب *naxrab* **1** /vi/ to rummage, scrabble. *ʕana saamiɛ firaan bi-tnaxrab wara d-dulaab ik-kibiir* I hear mice scuttling behind the big cupboard. ‖*fakkeet ir-radyu w-naxrabt[i] fii fwayya ʕaḥaawil ʕaṣallaḥ-u ma-qdirt[i]-ʃ* I took the radio apart and tinkered about with it trying to fix it, but I couldn't. **2** /vt/ to bore into. *ʕis-suus naxrab il-xaʃab* the woodworm tunnelled through the wood. - vn *naxraba*; ava/pva *minaxrab*.
اتنخرب *ʕitnaxrab* /vi/ **1** (impersonal) passive of *naxrab* 1. *ʕit-tilivizyoon dayman ɛaayiz yitnaxrab fi-sluuk-u l-midaldila di ɛaʃaan yiftaval* these dangling wires always need to be played about with for the television set to work. **2** to be bored into. - vn *tinaxriib*; iva *mitnaxrab*.

ن خ ز
نخز *naxaz (u)* /vt/ to poke, prod. *ʕil-walad bi-yɛayyaṭ ɛaʃaan ʕaxuu naxaz-u f-gamb-u* the boy's crying because his brother prodded him in the side. - vn *naxz, naxazaan*; ava *naaxiz*; pva *manxuuz*.
نخزة *naxza* /inst n, pl *-aat*/ a prod, a poke.
اتنخز *ʕitnaxaz* /vi/ to be poked, be prodded. - iva *mitnixiz*.
نخّز *naxxiz* /vt/ to poke or prod repeatedly. - vn *tanxiiz*; ava/pva *minaxxiz*.
اتنخّز *ʕitnaxxiz* /vi/ to be poked or prodded repeatedly. - iva *mitnaxxiz*.

ن خ س
نخس *naxas (u)* /vt/ to goad, prod, prick. - vn *naxs, naxasaan*; ava *naaxis*; pva *manxuus*.
نخسة *naxsa* /n pl *-aat*/ goad.
اتنخس *ʕitnaxas* /vi/ to be goaded, prodded or pricked. - iva *mitnixis*.
نخّس *naxxas* /vt/ to prod, prick or goad repeatedly. - vn *tanxiis*; ava/pva *minaxxas*.

اتنخّس ʕitnaxxas /vi/ to be prodded, pricked or goaded repeatedly. - iva *mitnaxxas*.

ن خ ش و ش
نخشوش *naxʃuuf* /n pl *naxafiif*/ **1** gill. **2** nasal cavity. *ʧilɛit il-mayya f-naxafiif-i* the water got up my nose. - also *naxʃuuf*.

ن خ ع [1]
نخع *naxaɛ (a)* /vt/ **1** to heave against (s.th.) till it yields. *ʕig-gamuusa naxaɛit is-saqya* the buffalo heaved over the water-wheel. ‖ *ʕil-muʧrib qaɛad yinxaɛ ʧuul il-leel* the singer went on braying all night long. **2** to deal (s.o.) a toppling blow. *naxaɛ-u kaff* he gave him a slap that sent him reeling. — /vi/ **3** to tell whoppers, tell unbelievable lies. - vn *naxɛ, naxaɛaan*; ava *naaxiɛ*.
أنخع ʕanxaɛ /el/ more/most fibbing or bragging.
نخّاع *naxxaaɛ* /adj */ fibber, braggart.
انتخع ʕitnaxaɛ /vi/ passive of *naxaɛ* 1 and 2. - iva *mitnixiɛ*.
نخّع *naxxaɛ* /vi/ to jerk, judder. *ʕil-ɛarabiyya naxxaɛit minni* the car jerked forward out of my control. - vn *tanxiiɛ*; ava *minaxxaɛ*.

ن خ ع [2]
نخاع *nuxaaɛ* /n/ bone marrow.
نخاعى *nuxaaɛi* /adj/ *[anat]* **1** spinal. *saayil nuxaaɛi* spinal fluid. **2** pertaining to bone marrow.

ن خ ل [1]
نخل *naxal (u)* /vt/ to sift, sieve. *bi-yunxulu d-diqiiq* they are sifting the flour. - vn *naxl, nixiil, naxalaan*; ava *naaxil*; pva *manxuul*.
نخالة *nuxaala* /n/ siftings of flour, bran. ‖ *ma-yiswaa-f malw' widn-u nuxaala* he's not worth as much bran as would fill his ear! - *zayy in-nuxaala l-mabduura* scattered far and wide and in great abundance, as in *ʕil-baqq' zayy in-nuxaala l-mabduura* the bedbugs are all over the place!
منخل *manxul* /n pl *manaaxil, manaxiil*/ flour-sifter, flour-sieve.
اتنخل ʕitnaxal /vi/ to be sifted, be sieved. - iva *mitnixil*.

ن خ ل [2]
نخل *naxl* /coll n/ palm tree(s).
نخلة *naxla* /unit n, pl *-aat*/ a palm tree.
نخلايه *naxlaaya* = *naxla*.
نخيل *nxiil↑* = *naxl*.

ن خ م
نخامة *nuxaama* /n/ piece of phlegm.
اتنخّم ʕitnaxxam /vi/ to clear one's throat of phlegm noisily, hawk. - ava *mitnaxxam*.

ن خ ن خ
نخنخ *naxnax* **1** /vt/ to cause to yield or lose resolution. *ma-naxnax-uu-ʃ ʂeer il-baqʃiif* it is only the tip that made him change his mind. **2** /vi/ to yield, lose resolution. - vn *naxnaxa*; ava/pva *minaxnax*.
اتنخنخ ʕitnaxnax /vi/ to lose resolution. - ava *mitnaxnax*.

ن خ و ر
نخور *naxwar* /vi/ to probe (e.g., with the finger). *baʈʈal naxwara f-manaxiir-ak* stop rooting around (with your finger) in your nose! ‖ *naxwaru fil-mawḍuuɛ li-ʂaayit ma gaabu ʕaxr-u* they probed into the matter till they got to the bottom of it. - vn *naxwara*; ava *minaxwar*.
اتنخور ʕitnaxwar /vi/ (impersonal) passive of *naxwar*. *ʕil-manaxiir lamma yitnaxwar fiiha ktiir tiwram* if you pick your nose a lot it will swell. - iva *mitnaxwar*.

ن د ب [1]
ندب *nadab' (i)* **1** /vt/ to bewail. *nadabu l-ḥaẓẓ illi xanhum* they bewailed the bad luck that had let them down. **2** /vi/ to utter words of lamentation. *raaḥit nadba ɛala goz-ha* she started to wail over her (dead) husband. - vn *nadb, nadabaan*; ava *naadib*.
نديب *nidiib* /n/ mourning, bewailing, lamentation.
ندّابة *naddaaba* /n pl *-aat, naddaaba*/ hired female mourner.
اتندب ʕitnadab' /vi/ to be bewailed. - iva *mitnidib*.

ن د ب [2]
ندب *nadab[2] (ı)* /vt/ to delegate, commission. *ʕana nadabt-ak ɛanni* I've made you my representative. - vn *nadb, nadabaan*; ava *naadib*; pva *manduub*.
ندبة *nadba* /pl *-aat*/ instance noun of *nadb*.
مندوب *manduub* /n */ one with delegated powers, delegate, representative. *manduub ʃirka* company representative. *manduub ṣarf* employee authorized to make payments on behalf of his employers.
اتندب ʕitnadab[2] /vi/ to be delegated, be commissioned. - iva *mitnidib*.
انتدب ʕintadab↑ /vi/ to appoint to a post in an outside institution, second. *baqaa-lu ɛaʃar siniin muntadab ɛanduhum* he's been on secondment to them for ten years. - /the literary passive occurs/ *mumkin tuntadab*

bis-saaɛa you may be seconded by the hour. - vn *ʕintidaab*; ava *mintidib, muntadib*; pva *muntadab*.
انتداب *ʕintidaab* /n pl *-aat*/ mandate, mandatory rule. *filisṭiin kaanit dawla taḥt il-intidaab il-biriṭaani* Palestine was a country under British mandatory rule.

ن د د
ندّ *nidd* /n pl *ʕandaad*/ **1** equal, peer. *laazim tiɛamil-ni muɛamlit in-nidd[i] lin-nidd* you have to treat me as an equal. **2** rival, opponent.
ندّد *naddid* /vi/ to be critical, find fault. *magliṣ if-faɛb[i] naddid bil-maʃariiɛ ig-gidiida* the People's Assembly was up in arms about the new projects. - vn *tandiid*; ava *minaddid*.
اتندّد *ʕitnaddid* /vi/ (impersonal) passive of *naddid*. *ʕil-ʕaɛmaal di laazim yitnaddid biiha* these acts must be condemned. - iva *mitnaddid*.

ن د ر [1]
ندر *nudur, nidir (a)* /vi/ to be rare. *yindar tilaaqi zayyu l-yomeen dool* you rarely find the like of it these days. *miʃ mumkin tilaqii hina ʕilla ma nudur* you can only find him here very rarely. - vn *nuduriyya, nuduura*; ava *naadir*.
نادر *naadir* **1** /adj */ rare. *gamaal naadir* rare beauty. **2** (also *nadra* or *naadir lamma* or *nadra lamma*) modal of rarity. *ʕin ikkallim naadir tifham-u* when he speaks, one can rarely understand him. *naadir lamma tfuuf il-ħagaat di* you rarely see these things.
نادرة *nadra* /n pl *nawaadir*/ **1** odd tale, strange story. *tuqɛud maɛaa yiḥkii-lak nawaadir kitiira* when you sit with him he tells you a lot of strange tales. ‖ *ʕamma nawaadir* how very strange! **2** eccentricity, odd behaviour. *ʕis-sitt[i] di liiha nawaadir* this lady does some very odd things.
أندر *ʕandar* /el/ rarer/rarest.
اتندّر *ʕitnaddar* /vi/ **1** to muse on or retell funny happenings or strange stories. **2** to make fun. *bi-yitnaddaru ɛala lli ħaṣal minha l-ʕusbuuɛ illi faat* they make fun of her for what she did last week. - ava *mitnaddar*.

ن د ر [2]
نذر *nàdar (i)* /vt/ to vow to offer (food or money to the poor or a charitable cause if a wish or prayer is fulfilled). *nadart[i] fuul wi-ɛeeʃ li-ʕumm[i] haafim law il-mawquuɛ da xiliṣ* I have vowed to offer beans and bread (to the poor) for the sake of Umm Hashim (i.e. Sayyida Zaynab) if this affair is cleared up. - vn *nadr, nadaraan*; ava *naadir*; pva *manduur*.
نذر *nadr* **1** /vn/ ‖*qill[i] min in-nadr[i] wi-wfi [prov]* ≈ don't promise more than you can fulfil. **2** /n pl *nuduur*/ **2a** vow. **2b** something dedicated to be offered in fulfilment of a vow.
¶ *nadrin ɛalayya* I vow (to do so-and-so). *nadrin ɛalayya ʕin nagaḥt awazzaɛ laḥma ɛal-fuqara* I vow to distribute meat to the poor if I pass (the exam).
اتندر *ʕitnadar* /vi/ passive of *nadar* - iva *mitnidir*.

ن د ر [3] see ن ظ ر : *mandara*

ن د ع
ندعة *nidɛa* /n pl *-aat, nidaɛ*/ drop. *nidɛit mayya* a drop of water.
ندّع *naddaɛ* /vi/ to drip. *ma-naṭṭarit-ʃ[i] yadoobak naddaɛit* it didn't rain, there were hardly more than a few spots. - vn *tandiiɛ*; ava *minaddaɛ*.
اتندّع *ʕitnaddaɛ* /vi/ (impersonal) passive of *naddaɛ*. *yiruuḥu l-mustaffa yitnaddaɛ luhum nidɛiteen fi-ɛnee-hum w-xalaaṣ* they go to hospital to have a few eye-drops administered and that is that. - iva *mitnaddaɛ*.

ن د غ
ندغ *nadaɣ (u)* (also *madaɣ, maqaɣ↑*) /vt/ to chew. *bi-yunduɣ libaan* he's chewing gum. *duxxaan in-nadɣ* chewing tobacco. - vn *nadɣ, nadaɣaan*; ava *naadiɣ*; pva *manduuɣ*.
ندغة *nadɣa[1]* /pl *-aat*/ instance noun of *nadɣ*.
ندغة *nadɣa[2]* (also *madɣa, maqɣa↑*) /n, pl *-aat*/ chewing tobacco.
نداغة *naddaaɣa* /n pl *-aat, nadadiiɣ*/ stickjaw, caramel candy.
اتندغ *ʕitnadaɣ* (also *ʕitmadaɣ, ʕitmaqaɣ*) /vi/ to be chewed. - iva *mitnidiɣ*.

ن د ل [1]
ندل *nadl* /adj pl *ʕandaal*/ low, base, despicable, mean.
أندل *ʕandal* /el/ more/most low, base, despicable or mean.
ندالة *nadaala* /n/ baseness, despicability, meanness.
نذّل *naddil* /vi/ to behave in a low and despicable manner, become low and despicable. *wi-marra waḥda baṣṣeet laqeet-u bṭada ynaddil maɛaaya* and all of a sudden I found him playing dirty with me. - ava *minaddil*.
استندل *ʕistandil* /vt/ **1** to consider low, mean or despicable. *kull in-naas istandilit-u lamma ma-rḍii-ʃ yitbarraɛ* everybody thought him despicable for not contributing.

2 to select for despicability and meanness. — /vi/ **3** to behave in a scoundrelly manner. - vn *ʕistindaal*; ava *mistandil*.

ن د ل [2] see م ن د ل: *mandal, mindaala*

ن د م

ندم *nidim (a)* /vi/ to feel regret, feel remorse. *ma-tindam-ʃ' ɛala lli faat* don't cry over spilt milk. - vn *nadaama, nadam, nadamaan*; ava *nadmaan, naadim*.

ندامة *nadaama* /n/ regret, remorse. ‖ *ya nadaama* or *ya nadamt-i [women in trad soc]* ≈ good grief! (an expression of exasperation or surprise). - *ʂabaḥ ḥaal-u nadaama* he became destitute. - *fil-ɛagala n-nadaama [prov]* ≈ haste makes waste.

اتندّم *ʕitnaddim* /vi/ to be regretful, be remorseful. - ava *mitnaddim*.

ن د ه

نده *nadah (a)* /vt and vi/ to call (to), call out (to). *nadaht it-taks* (or *lit-taks*) I hailed the taxi. *ruuḥ indah-u* (or *indah-lu* or *indah ɛalee*) go and call him. - vn *nadh, nadahaan*; ava *naadih*; pva *manduuh*.

ندهة *nadha* /inst n, pl *-aat*/ a call.

النّدّاهة *ʕin-naddaaha* /n/ evil spirit believed to come out at night and call people by their own names and lead them mesmerized to certain death by drowning.

اتنده *ʕitnadah* /vi/ **1** (impersonal) passive of *nadah*. ‖ *ʕil-muṭriba di b-yitnidih ɛaleeha l-yomeen dool* this singer is in demand these days, this singer is popular these days. *ʕil-ḥanaṭiir ma-yitnidih-ʃ' ɛaleeha dilwaqti* horse-cabs aren't in demand now. **2** to be called (to). ‖ *ʕil-moot ma-yitnidih-ʃ* death is not something one goes looking for. - *ʕil-maxfi l-ism' da lli ma-yitnidih* ≈ that rotten bastard whose name isn't worth mentioning. - iva *mitnidih*.

ن د و [1]

ندى *nidi (a)* /vi/ to become moist or damp (particularly with dew). - vn *nadayaan*; ava *naadi*.

ندى *nada[1] (i)* /vt/ to afflict with *nadwa*. - vn *nadw*; ava *naadi*; pva *mandi*.

ندى *nada[2]* /n/ dew. *ya-lli b-nadaa-ki ya ḥilba bi-nada l-veeṭ ya ḥilba [vendor's cry]* dewy fenugreek, fenugreek still with the dew of the fields!

ندوة *nadwa[1]* /pl *nadaawi*/ **1** frost. **2** exudation produced by certain plant pests. *nadwa badriyya* exudation produced by the fungus Alternaria selani. *nadwa ɛasaliyya* honeydew, sticky exudation produced by the aphis called *mann*.

ندويّة *nadawiyya* = *nadwa*.

نادى *naadi[1]* /adj */ **1** damp, moist. **2** blessed with good fortune, blessed with wealth. *baxt-u naadi* he has good luck (with money etc.). *nahaar-ak naadi* have a profitable day!

نداوة *nadaawa* /n/ moisture, dampness.

ندّى *nadda* **1** /vi/ to drizzle. *ʕaḥsan-li ʕaʃiil il-ɣasiil min ɛal-manʃar ʕaḥsan id-dinya baayin ɛaleeha ḥa-tnaddi* I'd better take the washing off the line because it looks as if it's going to drizzle. **2** /vt/ *[agric]* to dry (maize) of dew gathered from being out of doors overnight (of the sun). - vn *tandiyya*; ava/pva *minaddi*.

اتندّى *ʕitnadda* /vi/ passive of *nadda* 2. - iva *mitnaddi*.

انتدى *ʕintada* /vi/ to be afflicted with exudations from plant pests. - iva *mintidi*.

استندى *ʕistanda* /vt/ **1** to consider (too) moist or damp. **2** to select for moistness. - ava *mistandi*.

ن د و [2] see ن د ى: *nadwa[2]*

ن د ى

ندوة *nadwa[2]* /n pl *nadawaat*/ discussion group, seminar.

نادى *naadi[2]* /n pl *nawaadi, ʕandiyya, ʕandiya*/ club. *naadi ryaaḍi* sports club. *naadi sinima* cinema club.

نادى *naada* **1** /vt and vi/ to call (to), call out (to). *ʕil-ʕumm' bi-tnaadi (ɛala* or *li-) ʕawlad-ha* the mother calls (to) her children. *ḥaagib il-maḥkama naada (ɛala) l-muttaham* the court usher called for the defendant. **2** /vi/ to call, call out. *laazim tirudd' ʕawwil ma ʃ-ʃawiif yinaadi* you have to answer as soon as the sergeant calls. *ʕanaadi ʕaquul b-aṣallaḥ bawabiir ig-gaaz* I call out saying 'I mend paraffin stoves!' - vn *minadiyya, nida, nidaaʕ*; ava *minaadi*.

¶ *naada ɛala* to cry (wares). *bi-ynaadi ɛak-katakiit* he's hawking chicks through the streets. - *naada bi-* to appeal for. *ʕis-sawra bi-tnaadi b-ziyaadit il-ʕintaag* the revolution calls for increased production.

ندا، نداء *nida, nidaaʕ↑* /n/ call, cry. *ʕilli bi-ybiiɛu fiʃ-ʃaariɛ kull' waaḥid luu nida* each of those who sell (their wares) in the street has a cry.

منادى *minaadi* or *munaadi* /n */ **1** parking attendant. **2** *[obsol]* town-crier, one who announces the decrees of the Sultan etc.

اتنادى *ʕitnaada* /vi/ passive of *naada*. - iva *mitnaadi*.

ن ذ ر see ن د ر [2] and ن ز ر

ن ذ ع see ن د ع

ن ذ ل see ن د ل [1].

ن ر ج see ن ر ى ج: *nariig*

ن ر ج ى ل
نرجيلة *nargiila* <P *nârgîl*> /n pl *-aat, naragiil/* narghile, water-pipe.

ن ر ز see ن ر و ز: *naruuz, naruuz, neeruuz*

ن ر ف ز
نرفز *narfiz, narviz* <It *nervoso*> /vt/ to irritate, annoy, set one's nerves on edge. *manzar-u bi-ynarfiz-ni* the (very) sight of him makes me touchy. - vn *narfaza, narvaza*; ava/pva *minarfiz, minarviz*.
نرفز *nirfiz* <Engl *nervous*> /adj invar/ nervy.
اترفز *ʔitnarfiz, ʔitnarviz* /vi/ to behave irritably or become irritable. *ma-titnarfiz-fⁱ ɛalayya* don't be bad tempered with me! *b-aḥissⁱ b-ḍarabaat ɋalb-i tiɛla ɋawi lamma ʔatnarfiz* I feel my heart beats pounding faster when I get upset. - ava *mitnarfiz, mitnarviz*.

ن ر ن ج
نارنج *naring* <P *nârang*> /coll n/ Seville orange(s). - also *laring*.

ن ر و ز
ناروز *naruuz, naruuz* (also *neeruz*) <P *nau-roz*> /n/ first day of the Coptic year (11th September). *ʔilli yizraɛ dura fi-naruuz yaaxud ɋaluuḥa min ɣeer kuuz [prov]* he who sows maize at *naruuz* gets a cob without seeds.

ن ر و ى ج
النرويج *ʔin-nurwiig* /prop n/ Norway.
نرويجى *nurwiigi* **1** /adj */ Norwegian. **2** /n */ a Norwegian. **3** /n, no pl/ the Norwegian language.

ن ر ى ج
نريج *nariig: ʃakuuf ʔabu nariig* hammer with a wedge-shaped edge opposite the striking face.

ن ز ح
نزح *nazaḥ (a)* **1** /vt/ to empty (of dirty water or the like). *nazaḥit il-ḥooḍ* she emptied out the basin. *nazaḥu l-bakaburt* they emptied the cesspool. **2**↑ /vi/ to migrate. *nazaḥu mil-balad baɛd il-ḥarb* they left the country after the war. - vn *nazḥ, niziiḥ, nizḥiyya, nazaḥaan*; ava *naaziḥ*; pva *manzuuḥ*.
نزحة *nazḥa* /pl *-aat*/ instance noun of *nazḥ*.
اتنزح *ʔitnazaḥ* /vi/ passive of *nazaḥ* 1. - iva *mitniziḥ*.

ن ز ر
أنذر *ʔanzar* /vt/ to give a warning to. ‖*laqad ʔaɛzara man ʔanzar [prov]* he who who allows you time to mend your ways by giving you a warning has every justification for acting against you if you pay no heed. - vn *ʔinzaar*; ava *munzir*.
انذار *ʔinzaar*[2] **1** /vn/ ‖*ṣuffaarit ʔinzaar* warning siren. — /n pl *-aat*/ **2** warning. **3** *[pol]* ultimatum.

ن ز ز
نزّ *nazz (i)* **1** /vi/ to ooze out. *ʔiza dust*[a] *ɛal-ʃarḍ*[i] *tlaaɋi l-mayya bi-tnizz*[i] *taḥt*[i] *riglee-k* if you tread on the ground you'll find the water oozes out under your feet. **2** /vt/ to ooze, drip with. *ɋurt-u bi-tnizz*[a] *ɛaraɋ* his forehead is oozing sweat. ‖ *ʔil-fiṭiir bi-ynizz*[i] *samna* the pastry is saturated with fat. - vn *nazz, nazaɛaan*; ava *naaziz*.
نزّاز *nazzaaz* /adj/ **1** (too) porous. *ɋulla nazzaaza* a water-pot whose porous texture allows too much water to seep through. **2** leaky, seeping, oozing. *garḥ*[i] *nazzaaz* an oozing wound. ‖*mara nazzaaza* a woman who is always crying.
نزّز *nazziz* /vi/ to seep, let out liquid continuously. - vn *tanziiz*; ava *minazziz*.

ن ز ع [1]
نزع *nazaɛ*↑ *(a)* /vt/ to withdraw, take away (a right). *nazaɛu minnu milkiyyit il-ʃarḍ* they took from him the right to possess the land. *nazɛ is-silaaḥ* disarmament. - vn *nazaɛaan, nazɛ*; ava *naaziɛ*; pva *manzuuɛ*.
انتزع *ʔitnazaɛ* /vi/ to be withdrawn (of a right). - iva *mitniziɛ*.
نازع *naaziɛ*[1] /vt/ to dispute with, quarrel with. *ʔaxuu nazɛ-u ɛala milkiyyit il-ʃarḍ* his brother disputed with him the ownership of the land. - vn *munazɛa, minazɛa*; ava *minaaziɛ*.
اتنازع *ʔitnaaziɛ* /vi/ **1** to get into a dispute (with one another). **2** to be disputed with. - iva *mitnaaziɛ*.
انتزع *ʔintazaɛ*↑ = *nazaɛ*. - vn *ʔintiziaaɛ*; ava/pva *mintiziɛ*.

ن ز ع [2]
نازع *naaziɛ*[2] /vi/ to moan. *bi-yxaṭraf mis-suxuniyya w-yifḍal yinaaziɛ* he raves with fever and keeps on moaning. - vn *minazɛa*; ava *minaaziɛ*.

ن ز ف
نزف *nazaf (i)* **1** /vi/ to bleed, haemorrhage. *baɛd il-wilaada fḍilt*[i] *ʔanzif kitiir* after giving birth I went on

bleeding a lot. *ʕana b-anzif min manaxiir-i* I get nosebleeds. **2** /vt/ to bleed (blood). *nazaft' damm' ktiir* I lost a lot of blood. - vn *niziif, naziif*; ava *naazif*; pva *manzuuf*.

نزيف *niziif, naziifˀ* /n/ haemorrhage.

اتنزف *ʔitnazaf* /vi/ to be lost (of blood). - iva *mitnizif*.

استنزف *ʔistanzifˀ* /vt/ to drain, sap. *ʔif-furb' b-yistanzif ṭaqt-u* drinking is sapping his energy. ‖*ḥarb istinzaaf* war of attrition. - vn *ʔistinzaaf*; ava/pva *mustanzif, mistanzif*; pva *mustanzaf*.

ن ز ل

نزل *nizil (i)* /vi/ **1** to descend, go downward, move downward. *sikkiinit il-maqaṣṣ' b-tinzil ʕala sifl ik-kitaab* the blade of the guillotine comes down on the bottom of the book. *nizlit ʕalee nuqṭteen mayya* a couple of drops of water fell on it. *ʔil-ʕarabiyya nizlit fi-maṭabb* the car went into a pothole. *bi-yinzilu fil-ḥafr' l-ɤaayit il-manasiib il-maṭluuba* they dig down till they reach the required levels. *ṭaffa n-nuur wi-nizil taḥt il-ɤaṭa* he put out the light and got under the bedcover. *ʔiṭ-ṭariiq bi-yinzil min hina* the road slopes down from here. ‖*nizil ʕalee ʕaraq* he broke out in a sweat. *nizil ʕaleeha damm* she started bleeding. *nizil ʕaleeha l-ḥeeḍ* she started menstruating. **2** to decline, become reduced. *ʔil-ḥaraara nizlit* the temperature went down. *ʔil-ʔasʕaar nizlit* the prices went down. *ʔana ʕammaal naazil fil-xissiyya* I keep losing weight. ‖*nizil min naẓar(-u)* to go down in (s.o.'s) estimation. *-fin-naazil* on the decline, as in *ʔit-tigaara fin-naazil* trade is on the decline, *baqeet fin-naazil li-ɤaayit lamma baqeet ʔamfi b-ʕaṣaaya* I continued to get worse till I reached the stage where I had to walk with a stick. **3** to disembark, dismount. *ʕaawiz ʔanzil ʕand il-midaan* I want to get off at the square. *ʔinzil mit-taksi* get out of the taxi! **4** to depart, set off. *nizilt' mil-beet* I left the house. *nizlu (li-)f-fuɤl* they went off to work. *ʔil-muwaẓẓaf naazil ʔagaaza* the official is on holiday. **5** to appear, emerge. *ʔil-mulaakim nizil il-ḥalba* the boxer came out into the ring. *ʔil-fariiq nizil il-malʕab* the team emerged onto the field. *ʔil-muẓahraat mamnuuʕ tinzil if-faariʕ* it is forbidden for the demonstrations to go out onto the street. *ʔisṭuwaana gdiida nizlit (fi-)s-suuq* a new record came out on the market. *ʔil-firaax bi-tinzil ig-gamʕiyya kull' yoom talaat* chickens are available at the co-operative every Tuesday. *ʔis-sitt' fiz-zaar bi-tinzil ʕad-daqqa lli bi-trayyaḥ-ha* a woman at a *zaar* joins in (with the others) when the rhythm that soothes her is played. **6** to reside, lodge. *nizilt[a] ʕand axuu-ya* I stayed at my brother's. *nizlit fi-lukanda* she stayed at a hotel. **7** preverb with following verbal noun signalling intensity of action. *nizilt[a] ʕalee ḍarb* or *nizilt' ḍarb' fii* I beat him for all I was worth. *kaan naazil raqṣ* he was absorbed in dancing. *hiyya nazla tawḍiib fi-xilqit-ha* she's busy painting her face. - /elliptically/ *nizilt[a] ʕalee bil-ʕaṣaaya* I beat him for all I was worth with a stick. - vn *nuzuul, nazla*; ava *naazil*.

¶ *nizil ʕala* to submit to. *nizilt[a] ʕala kalaam-u* I complied with what he said. *nizilt[a] ʕala ḥukm abuu-ya* I submitted to my father's decision. *nuzuulan ʕala* in compliance with, as in *ḥ-araffaḥ nafs-i nuzuulan ʕala raɤbit-kum* I'll stand for election in compliance with your wish.

نزلة *nazla* /n pl *-aat*/ infection. *nazla maʕawiyya* intestinal infection. *nazla faʕbiyya* (or *fuʕabiyya*) bronchitis. *nazlit bard* attack of cold.

منزول *manzuul* /n pl *manaziil*/ *[obsol]* compound of opium, hashish and spices.

نزلاية *nazalaaya* /n pl *-aat*/ slope, path sloping downwards.

نزيل *naziil* /n pl *nuzala, nuzalaa*ʔˀ/ temporary resident (e.g., in an hotel, prison, hospital).

منزل *manzilˀ* /n pl *manaazil*/ residence, home. *nimrit il-manzil* home (telephone) number. ‖*ḥamaam manaazil* domesticated pigeons.

منزلي *manzili* /adj/ household. *ʔadawaat manziliyya* household utensils. *ḥaʃaraat manziliyya* household insects. *tadbiir manzili* domestic science.

منزل *manzal* /n pl *manaazil*/ slope, path sloping downwards.

نزّل *nazzil* /vt/ **1** to close up, bring, take or send down, lower. *bi-ynazzilu l-ʕaff* they are bringing down the luggage. *nazzilnaa-ha min ʕal-babuur* we took it off the primus stove. *nisiib-u ʕifriin yoom wi-nnazzil ʕalee taalit mayya* we leave it twenty days and then water it for the third time. **2** to reduce. *ʔin-naṭara nazzilit il-ḥaraara* the rain brought down the temperature. *nazzil lina t-taman* knock something off the price for us. **3** to cause to disembark. *ʔik-kumsari nazzil-hum mil-qaṭr* the conductor put them off the train. **4** to cause to depart, cause to set off. *ʔeeh illi nazzil-ak ʕaṣ-ṣubḥ* what's brought you out so early in the morning? **5** to cause to appear or emerge. *kull' sana bi-ynazzilu marka gdiida* each year they put out a new model. — /vi/ **6** to ejaculate. **7** to pour out (of sweat). *ʔil-ʕaraq nazzil ʕala gism-u wil-ḥaraara xaffit* sweat poured out of his body and the temperature subsided. - vn *tanziil*; ava *minazzil*.

تنزيلة *tanziila* /pl *-aat*/ instance noun of *tanziil*.

اتنزّل *ʔitnazzil* /vi/ passive of *nazzil*. - iva *mitnazzil*.

نازل *naazil* /vt/ to have a duel with, contest. *tinazil-ni fig-gary* will you race me? - vn *minazla*; ava *minaazil*.
اتنازل *ʔitnaazil, tanaazal↑* /vi/ **1** to act condescendingly. **2** to give way, step down. *mif ḥ-atnaazil ɛan ḥaqq-i* I will not forego my rights. *ʔitnaazil ɛan il-ɛarf* he abdicated the throne. **3** to contest (with o.a.). **4** to be fought against. - vn *tanaazul*; ava/iva *mitnaazil*.
تنازلي *tanaazuli* /adj/ in descending order. ‖*ɛadd' tanaazuli* count-down.

أنزل *ʔanzal* **1** /vt/ to inspire, reveal (of God). *kalaam ma-ʔanzal allaahu bihi min sulṭaan* ≈ rubbish, nonsense. ‖*ḥikaaya ma-ʔanzal allaahu biha min ṭiiz gaḥḥ [coarse]* ≈ bullshit. **2** /vi/ to ejaculate. - vn *ʔinzaal*; ava *munzil*; pva *munzal*.
منزل *munzal* /adj/ divinely bestowed (especially of the Koran). ‖*kalaam-u munzal* his word is law, no one dares to disobey him.
استنزل *ʔistanzil↓* **1** /vt/ to deduct (a sum, from a price). *ma-tistanzil lina ɋirfeen* knock a couple of piastres off for us! **2** /vi/ to give way, step down. *mif mumkin yistanzil ɛan illi f-raas-u* he would never give up what he has in mind. - ava *mistanzil*.

ن ز ه

نزهة *nuzha* /n pl *-aat, nuzah*/ promenade, outing.
نزهي *nuzahi* /adj pl *-yya*/ **1** spendthrift, prodigal. *maal ik-kunazi lin-nuzahi [prov]* ≈ the miser's wealth is spent by his prodigal heir. **2** elegant and fun-loving. *ʔaqraɛ wi-nuzahi [prov]* his head is afflicted with ringworm but he's always dressed to kill (of one who is oblivious to his own shortcomings).
نزاهة *nazaaha* /n/ honesty, probity, integrity.
نزيه *naziih* /adj pl *nuzaha*/ honest, scrupulous.
أنزه *ʔanzah* /el/ more/most honest or scrupulous.
نزّه *nazzih* or *nazzah* /vt/ **1** to give pleasure and enjoyment to. *ʔana maɛaaya ɋirfeen wi-laazim ʔanazzih nafs-i* I have a bit of money so I must give myself a good time. **2** to dissociate (s.o., from s.th. undesirable). *ʔil-waaḥid laazim yinazzih nafs-u ɛan dool* one must avoid them like the plague. - vn *tanziih*; ava *minazzih, minazzah*.
اتنزّه *ʔitnazzih* or *ʔitnazzah* /vi/ passive of *nazzih*. - iva *mitnazzih, mitnazzah*.
منتزه *muntazah* /n pl *-aat*/ park, public garden.

ن ز و

نزوة *nazwa* /n pl *nazawaat*/ **1** whim, caprice. *di nazwit ʃabaab wi-bukra yiɛɋal* it's just a youthful whim; he'll know better when he's older. **2** outburst, surge.

ن س ا ¹

نسا *nisa'*: *ɛirq in-nisa* sciatica.

ن س ا ² see ن س و ¹: *nisa²*

ن س ب ¹

نسب *nasab' (i)* /vt/ to trace back to. *da b-yinsibuu li-baxt-a-ha ṭ-ṭayyib* this they attribute to her good fortune. - vn *nasab*; ava *naasib*; pva *mansuub*.
نسب *nasab²* /n/ **1** pedigree, lineage, family connections. *nasab-u yirgaɛ lil-mamaliik* his line goes back to the Mamelukes. **2** relationship by marriage. *ʔabu nasab [joc]* epithet of a male in-law. *ʔin-nasab ɛaṣab [prov]* (one's) in-laws are as valuable as (one's) blood-relatives. ‖*ʔil-ḥasab win-nasab* social standing.
منسوب *mansuub* /n pl *manasiib*/ level (in surveying etc.). *mansuub il-mayya* the water level. *mansuub il-ḥafr* the level of excavation.
نسيب *nisiib* /n pl *nasaayib*/ male relative-in-law.
منسّب *minassib* /adj */ of good parentage, of good pedigree.
ناسب *naasib'* /vt/ to marry into (a family). *naasib naas muḥtaramiin* he married into a respected family. ‖*ʔin ma-kaan lak ʔahl' naasib [prov]* if you have no (worthy) family acquire one by marriage. - vn *minasba*; ava/pva *minaasib*.
اتناسب *ʔitnaasib'* /vi/ passive of *naasib'*. - iva *mitnaasib*.
انتسب *ʔintasab↑* /vi/ **1** to be associated, associate oneself. *ʔaɛḍaaʔ muntasibiin* associate members. **2** *[acad]* to enrol as an external student.

ن س ب ²

نسبة *nisba* /n pl *nisab*/ proportion, degree, rate. *ʔil-fannaniin luhum nisab min il-mabiɛaat* the artists get payments based on percentages of the sales. *nisbit il-kiffiyya* the degree of shrinkage. *nisbit il-ʔiɛfaaʔ iḍ-ḍariibi* the rate of tax exemption. *nisba miʔawiyya* percentage. ‖*bin-nisba li-* for, as for, as far as ... is concerned, as in *ʔil-libs' da lir-riggaala ʔamma bin-nisba lis-sittaat fa-b-yilbisu ɛaadi* this costume is for the men; as for the women, they dress ordinarily, *huwwa-nta bin-nisba-lna fwayya* do you imagine you're nothing to us?
نسبي *nisbi* /adj/ proportional, relative.
¶ *nisbiyyan* /adv/ proportionately, relatively.
أنسب *ʔansab* /el/ more/most appropriate, more/most fitting.
ناسب *naasib²* /vt/ to be suitable (for), be appropriate (to). *fil-waɋt il-munaasib* at the appropriate time.

bi-nṣammim li-kull' waḥda ʃ-ʃakl illi yinasib-ha for each woman we design the style that suits her. - vn *munasba*; ava *minaasib, munaasib*.

مناسبة *munasba* /n pl *-aat/* occasion. *rakʕiteen bi-munasbit il-ʕiḥraam* two *rakʕa* to mark the entering of the state of being a pilgrim. ‖*fil-munasbaat* on special occasions, as in *ḥagaat ma-tiṭlaʕ-ʃ illa fil-munasbaat* things that are brought out only on special occasions. - *bil-munasba (di)* incidentally, by the way, as in *bil-munasba fakkart-i-ni b-ḥaaga* incidentally, you've reminded me of something. - *bi-munasbit ʃeeh* what (ever) for?

اتناسب ʃitnaasib[2]↑ /vi/ to be accordant. *taṣarrufaat-ak ma-titnasib-ʃ' maʕa markaz-ak* your conduct is out of keeping with your position. - vn *tanaasub*; ava *mitnaasib, mutanaasib*.

تناسب *tanaasub* /n pl *-aat/ [math]* proportion. *tanaasub ʕaksi* inverse proportion.

استنسب ʃistansib /vt/ to select for suitability. - ava *mistansib*.

ن س ت see ن س و ت : *nasuut*

ن س ج

نسج *nasag (i)* /vt/ to weave. - vn *nasg, nasagaan, nasiig*; ava *naasig*; pva *mansuug*.

نسيج *nasiig* /coll n, pl *ʃansiga*↑/ **1** textile(s). **2** *[anat]* tissue.

نسّاج *nassaag* /n */ weaver.

منسوج *mansuug* /n pl *-aat/* textile, fabric.

اتنسج ʃitnasag /vi/ to be woven. - iva *mitnisig*.

ن س خ

نسخ *nasax (i, a, u)* /vt/ **1** to make a copy of. *ʃis-sikirteer bi-yunsux-ha ʕala l-ʃaala k-katba* the secretary copies it on the typewriter. **2** *[leg]* to abrogate. *fii qawaniin bi-tunsux qawaniin wi-tʕaṭṭal ʃaḥkam-ha* there are laws that abrogate (other) laws and abolish their stipulations. - vn *nasx*; ava *naasix*; pva *mansuux*.

نسخ *nasx* /n/ an Arabic script (commonly used in printed books, newspapers etc.).

نسخة *nasxa* /inst n, pl *-aat/* **1** a copying. **2** an abrogation.

نسخة *nusxa* /n pl *nusax/* copy, one of the various examples of the same book or the like.

اتنسخ ʃitnasax /vi/ passive of *nasax*. - iva *mitnisix*.

ن س ر[1]

نسر *nisr* /n pl *nusuur, nusúra/* eagle.

نسير *nisiir* /coll n/ strips or striae of fibre. *nisiir liif* palm-fibre strips. *laḥma kull-a-ha nsiir* red meat (without fat, gristle etc.). - also *nisiil*.

نسيرة *nisiira* /unit n, pl *nasaayir/* a strip or stria of fibre. - also *nisiila*.

نسّر *nassir* /vt/ **1** to pull (s.th. fibrous) into strips. *ḥ-anassir laḥm-u* I'll tear him to bits. **2** to fray (cloth). - vn *tansiir*; ava/pva *minassir*.

اتنسّر ʃitnassir /vi/ **1** to be pulled into strips (of fibrous material). **2** to be or become frayed (of cloth). - ava/iva *mitnassir*.

ن س ر[2]

ناسور *nasuur* /n pl *nawasiir/ [path]* fistula.

ن س ر[3]

نثر *nasr*↑ /n/ prose.

نثرى *nasri* /adj/ pertaining to prose.

ن س ف

نسف *nasaf (i)* /vt/ **1** to winnow. **2** to blow up with explosive. *nasafu xaṭṭ' sikka ḥadiid* they blew up a railway line. - vn *nasf, nasafaan*; ava *naasif*; pva *mansuuf*.

نسفة *nasfa* /pl *-aat/* instance noun of *nasf*.

نسّافة *nassaafa* /n pl *-aat/ [mil]* torpedo boat.

اتنسف ʃitnasaf /vi/ **1** to be winnowed. **2** to be blown up (with explosive). - iva *mitnisif*.

أنسف ʃansaf: *da baqa min ʕayyinit ʃinna ʃansafnaa-kum* this (person) is (actually) the type that would gobble you up!

ن س ق

نسق *nasaq*↑ /n/ pattern, arrangement. *kull il-biyuut ʕala nasaq waaḥid* all the houses are of the same layout and design.

نسّق *nassaq*↑ /vt/ **1** to arrange harmoniously. *nassaqit iz-zuhuur* she arranged the flowers. **2** to co-ordinate. *lagna li-tansiiq il-ʕamal been l-maṣaaliḥ* a committee (responsible) for co-ordinating the work among the departments. ‖*maktab tansiiq [acad]* student placement office (through which students are allocated university places). - vn *tansiiq, tansiiq*; ava *munassiq*↑; ava/pva *minassaq*; pva *munassaq*.

اتنسّق ʃitnassaq /vi/ **1** to be arranged harmoniously. **2** to be co-ordinated. - iva *mitnassaq*.

تناسق *tanaasaq*↑ /vi/ to be in harmony, be properly co-ordinated. *ʃil-ʃawtaar mafruuḍ tatanaasaq maʕa baʕḍ* the strings are supposed to be in tune with one another. *ʃil-xadamaat laazim tatanaasaq maʕa l-ʃintaag* (public) services ought to be co-ordinated with produc-

tion. *ʕil-kalaam la yatanaasaq maʕa l-laḫn* the words don't go well with the tune. - vn *tanaasuq*; ava *mutanaasiq*.

ن س ك

نسك *nusk* /n/ ascetism.

نسكى *nuski* /adj/ ascetic, ascetical.

ناسك *naasik* /n * and pl *nussaak*/ ascetic, hermit, pious man.

ن س ك ف –

نسكفيه *niskafeeh* (also *bunn[i] niskafeeh*) <brand name> /n/ instant coffee.

ن س ل [1]

نسل *nasal (i)* **1** /vi/ to become unravelled, become frayed. *nisiila nasalit min il-ʠumaaʃ* a thread became unravelled from the cloth. *ʕit-tanya nasalit* the turn-up became frayed. **2** /vt/ **2a** to unravel, fray. **2b** to stone (dates). *ʕagwa mansuula* stoned pressed dates. - vn *nasl*; ava *naasil*; pva *mansuul*.

نسلة *nasla* /inst n, pl *-aat*/ an unravelling.

نسيل *nisiil* /coll n/ strips or striae of fibre. - also *nisiir*.

نسيلة *nisiila* /unit n, pl *nasaayil*/ a strip or stria of fibre. - also *nisiira*.

نسالة *nusaala, nisaala* /n/ lint.

اتنسل *ʕitnasal* /vi/ **1** to be or become unravelled or frayed. **2** to be stoned (of dates). - ava/iva *mitnisil*.

نسّل *nassil* **1** /vt/ to unravel, fray. **2** /vi/ to be unravelled or unravel, be or become frayed. - vn *tansiil*; ava/pva *minassil*.

اتنسّل *ʕitnassil* /vi/ to be or become unravelled or frayed. - ava/iva *mitnassil*.

ن س ل [2]

نسل *nasl* **1** /vn/ giving birth, breeding. *taḫdiid in-nasl* birth control. **2** /coll n/ offspring, descendants. *nasl in-nabi* descendants of the Prophet Muhammad.

اتناسل *ʕitnaasil* /vi/ *[biol]* to reproduce. - vn *tanaasul*; ava *mitnaasil, mutanaasil*.

تناسلى *tanaasuli* /adj/ *[biol]* pertaining to the reproductive system. *ʕamraaʠ tanasuliyya* venereal diseases.

ن س م

نسمة *nisma* /n pl *nasaayim*/ breeze. *ma-fii-ʃ ḫatta nismit hawa* there is not even a breath of wind. *kaanit in-nisma ṭariyya trudd ir-rooḫ* the breeze was cool and refreshing. ‖*raaḫ wi-rigiʕ zayy in-nisma* he went and came back as fast as the wind.

نسمة *nasama↑* /n pl *-aat*/ inhabitant (in statistical contexts).

نسيم *nisiim, nasiim* /n/ breeze. ‖*ʃamm in-nisiim* secular spring holiday falling on the Monday after Coptic Easter and celebrated with morning picnics and the eating of traditional foods such as onions, *fisiix* and coloured eggs.

نسّم *nassim* /vt/ to wet lightly so as to soften. *nassim ir-riṿiif* wet the (dry) bread a little (to make it edible). **2** /vi/ to become breezy and fresh. *ʃoʠt-i bi-tnassim bil-leel* my room catches a breeze in the evening. - vn *tansiim*; ava/pva *minassim*.

اتنسّم *ʕitnassim* /vi/ to be wetted lightly and so softened. - iva *mitnassim*.

ن س ن س

نسناس *nisnaas* /n pl *nasaniis*/ monkey.

نسنس *nasnis* /vi/ to spy, snoop. *ʃig-gadaʕ da bi-ynasnis ḫawaleekum leeh* why is this guy hanging around you so inquisitively? - vn *nasnasa*; ava *minasnis*.

اتنسنس *ʕitnasnis = nasnis*. - ava *mitnasnis*.

ن س و

نسا، نساء *nisa[2]* /coll n/ women, womenfolk. *ʃamraaʠ nisa* gynaecology. *ʃil-ʕaar ʕan-nisa [prov]* the blame (for faults in children's upbringing) is to be laid at the feet of their mothers.

نسوان *niswaan* /coll n/ *[deris]* women, womenfolk. see further under ن س و ن

نساوين *nasawiin* /coll n/ *[deris]* women, broads.

ن س و ت see also ن ا س

ناسوت *nasuut* <Syr> /n/ *[Chr]* human nature (of Christ).

ن س و ن see also ن س و [1]

نسون *naswin* /vt/ to make effeminate, turn into a sissy. *ʃumm-u naswinit-u* his mother made a sissy out of him. - vn *naswana*; ava/pva *minaswin*.

اتنسون *ʕitnaswin* /vi/ to become or be made effeminate or sissyish. - ava/iva *mitnaswin*.

ن س ى

نسى *nisi (a)* /vt/ to forget. *nisyit il-muftaaḫ* she forgot the key. *ma-yinsaa-ʃ il-maʕruuf ʂeer il-xasiis [prov]* only the base are ungrateful. - vn *nasw, nasayaan, nisyaan*; ava *naasi*; pva *mansi*.

النسى *ʕin-nasy* /n/ period of five or six intercalary days in early September constituting the thirteenth month of the Coptic year.

نسّاى *nassaay* /adj */ forgetful, absent-minded.
اتنسى *ʃitnasa* /vi/ to be forgotten. *layaali l-quṭn' matitnisii-f* the nights of the cotton (harvest) are unforgettable. - iva *mitnısi*.
نسّى *nassa* /vt/ to cause to forget. *nassaa hamm-u* it made him forget his worries. - vn *tansiyya, tansıya*; ava/pva *minassi*.
اتنسّى *ʃitnassa* /vi/ to be made to forget. - iva *mıtnassi*.
اتناسى *ʃitnaasa* /vt/ **1** to pretend to forget. **2** to forget deliberately, neglect. - ava *mitnaasi*.

ن ش ا see ن ش ى : *nifa*

ن ش ا د ر
نسادر *nafaadir, nufaadir* <P *nushâdir*> /n/ **1** ammonia. **2** smelling-salts.

ن ش ء
نشأ *nafaʃ'↑ (a)* /vi/ **1** to grow up. *ʃil-balad illi nafaʃt' fiiha* the country in which I grew up. **2** to arise, originate. *ʃil-ḥaraayıq bi-tinfaʃ mın ıl-ʃıhmaal* fires are caused by negligence. - vn *nafʃa, nufuuʃ*; ava *naafiʃ*.
نسأ *nafa, nafaʃ²* (ı) /vt/ to establish, start. *ʃinta lli nafeet iẓ-ẓulm' fil-balad-di* you are the one who sowed the seeds of injustice in this town. - vn *nafw, nafʃ, nafʃa*; ava *naafıʃ*; pva *manfuuʃ*.
ناشئ *naafıʃ↑* /n */ youngster, member of the rising generation.
منشيّه، منسأة *manfiyya* /n pl *manaafi*/ recently built village or suburb.
اتنسأ *ʃitnafa, ʃitnafaʃ* /vi/ to be built, be constructed. *ʃil-maṣnaɛ da tnafaʃ mil-ɛadam* this factory was built from practically nothing. - iva *mıtnıfıʃ*.
أنسأ *ʃanfaʃ↑* = *nafa*. - vn *ʃinfaaʃ*; ava *minfiʃ, munfiʃ*; pva *munfaʃ*.
إنساء، إنسا *ʃinfa, ʃinfaa↑* /n/ **1** *[acad]* composition (as a school subject). *ʃinfa taḥrıırı* written composition. *ʃinfa ʃafawi* oral presentation of a theme. **2** /pl *-aat*/ structure, construction. — /adj invar/ **3** (*ʃinfa* only) empty, shallow (of talk or writing).
إنسائى *ʃinfaaʃı* **1** /adj */ pertaining to construction. *muhandıs ʃinfaaʃı* construction engineer. **2** /adj/ empty, shallow (of talk or writing). *kifaaya kalaam ʃinfaaʃi* enough of this empty talk!
منسأة *munfaʃa↑* /n pl *-aat*/ (commercial, professional etc.) establishment, shop, workshop etc.

ن ش ب
نسب *nafab↑ (ı, a)* **1** /vi/ to break out. *fii xaṭar nufuub ḥarb' been iṣ-ṣiin wı-rusya* there is a danger of an outbreak of war between China and Russia. *ʃin-naar nafabit fi-maxzan ıl-xafab* fire started in the timber warehouse. **2** /vt/ to drive in, dig in (nails, talons etc.). *nafab ḍawafr-u f-ɛenee* he sank his talons into his eyes. - vn *nafabaan, nufuub, nafb*; ava *naafib*; pva *manfuub*.
نسّابه *naffaaba* /n pl *-aat*/ rolling-pin.
اتنشب *ʃitnafab* /vi/ to be driven in (of nails, talons etc.). - iva *mıtnifib*.

ن ش د
نسيد *nafıd* /n pl *ʃanafiid*/ song or chant (usually of a patriotic or religious nature) sung by a group. *nafiid ḥamaasi* morale-raising song. *nafiid iṣ-ṣabaaḥ* song sung by the assembled pupils of a school before classes start. *ʃin-nafiid il-waṭani* (or *ʃil-qawmi*) the national anthem.
أنشد *ʃanfad* /vt/ to chant or sing (religious verse). *ʃanfad ɋaṣiida f-madḥ ın-nabi* he sang an ode in praise of the Prophet Muhammad. - vn *ʃinfaad*; ava *munfid*.
منشد *munfid* /n */ one who chants or sings religious songs.

ن ش د ر see ن ش ا د ر : *nafaadır, nufaadir*

ن ش ر
نسر *nafar' (u)* /vt/ **1** to hang out (e.g., washing). *nafarit il-liḥaaf fif-fams* she put the quilt out in the sun. **2a** to spread abroad, propagate. *ʃid-dibbaan bi-yunfur il-ʃamraaḍ* flies spread disease. *nafaru ʃafkaar fiyuɛıyya fig-gamɛa* they spread communist ideas in the university. **2b** to publish (books). - vn *nafr, nafr, nifiir*; ava *naafir, naafir*; pva *manfuur*.
نسرة *nafra'* /n pl *-aat*/ (news) bulletin.
ناشر *naafır* /n */ publisher.
منشور *manfuur* /n pl *-aat, manafıir*/ **1a** small publication, leaflet, pamphlet. **1b** circular. **1c** decree. **2** *[phys]* prism.
منشر *manfar* /n pl *manaafı*/ **1** place where clothes are hung to dry. **2** clothes horse.
اتنشر *ʃitnafar'* /vi/ **1** to be hung out (e.g., of washing). **2a** to be spread abroad, be propagated. **2b** to be published. - iva *mitnıfir*.
نشّر *naffar'* /vt/ **1** to hang (several things) out. **2** to spread (things) out. - vn *tanfiir*; ava/pva *minaffar*.
اتنشّر *ʃitnaffar'* /vi/ passive of *naffar'*. - iva *mitnaffar*.
انتشر *ʃintafar* /vı/ **1** to spread. *ʃil-buɋaɛ ibtadit tintifir fi-baṭn-u w-ḍahr-u* the spots started to spread on his stomach and back. *lamma yiftaḥ ıl-ḥanafiyya l-butagaaz*

ha-yintifir guwwa l-ħammaam when he turns the tap, the gas will spread inside the bathroom. **2** to be widespread, be common. *ʕil-liɛ̨ba di miʃ mintifra f-maṣr* this game is not widely known in Egypt. - vn *ʕintifaar*; ava *mintifir, muntafir*.

ن ش ر 2

نسر *nafar² (u)* /vt/ to saw. - vn *nafr, nafr*; ava *naafir, naafir*; pva *manfuur, manfuur*.

نسرة *nafra²* /inst n, pl *-aat*/ a sawing, a stroke of a saw.

نسارة *nifaara, nufaara* /coll n/ sawdust, shavings.

منسار *munfaar, minfaar* /n pl *manafiir*/ saw. ‖*ṭaliɛ̨ waakil naazil waakil zayy il-munfaar* ≈ he doesn't miss a single opportunity. - *munfaar fadd[i] w-ḍaɣṭ [athl]* push and pull exercises.

اتنسر *ʕitnafar²* /vi/ to be sawn. - iva *mitnifir*.

نسّر *naffar²* /vt/ **1** to saw into several pieces. **2** to saw a great deal, saw (a large quantity of wood). - vn *tanfiir*; ava/pva *mitnaffar*.

اتنسّر *ʕitnaffar²* /vi/ passive of *naffar²*. - iva *mitnaffar*.

ن ش ر 3

نسر *nafar³ (u)* /vi/ to ache. *gism-i b-yunfur* my body aches. - vn *nafr, nafr*; ava *naafir, naafir*; pva *manfuur, manfuur*.

ن ش ز 1

نشزت *nafazit (i)* /vi/ *[Isl]* to violate one's marital obligations (of a wife). *lamma s-sitt[i] tinfiz ma-lhaa-ʃ nafaqa* when a woman violates her marital obligations she ceases to have the right to maintenance. *sitt[i] naafiz* (or *nafza*) a woman in violation of her marital obligations. - vn *nifuuz, nufuuz*; ava *naafiz*.

ن ش ز 2

نساز *nafaaz* <P *nâ-sâz*> *[mus]* **1** /adj invar/ dissonant, out of tune. **2** /n/ dissonance.

نشّز *naffiz* /vi/ *[mus]* to go or play out of tune. - ava *minaffiz*.

ن ش ش

نش *naff (i)* /vt/ **1** to swat at, drive off (insects). *niff id-dibbaan min ɛ̨al-ʕakl* shoo the flies off the food! ‖*yiniff[i] dibbaan)* to be or become idle as in *ʕil-maħallaat baqit bi-tniff (id-dibbaan)* the shops have fallen idle. **2** to strike, hit. *naffeet-u ɛ̨alqa suxna* I gave him a good beating. *naffuu rṣaaṣa mawwituu* they shot and killed him. - vn *naff*; ava *naafif*; pva *manfuuf*.

نشّة *naffa[i]* /pl *-aat*/ instance noun of *naff*.

منشّة *minaffa* /n pl *-aat*/ fly whisk.

اتنشّ *ʕitnaff* /vi/ **1** to be driven off (of insects). **2** to be hit, be struck. - iva *mitnaff*.

ن ش ط

نشط *nafiṭ* /adj/ active. *sabɣaat nafiṭa [text]* active dyes.

أنشط *ʔanfaṭ* /el/ more/most energetic or active.

نشاط *nafaaṭ* /n pl *-aat, ʕanfiṭa*/ activity. *nafaaṭ saqaafi* cultural activity. *nafaaṭ riyaaḍi* sporting activity.

نشيط *nafiiṭ* /adj * and pl *nufaṭa*/ active, energetic.

نشّط *naffaṭ* /vt/ to stimulate. *bi-ynaffaṭ id-dawra d-damawiyya* it stimulates the circulation of the blood. *ʕil-ʕalɣaaz bi-tnaffaṭ iz-zihn* riddles stimulate the mind. ‖*tanfiiṭ il-mabiɛ̨aat* sales promotion. - vn *tanfiiṭ*; ava/pva *minaffaṭ*.

منشّط *munaffiṭ* /n pl *-aat*/ stimulant.

اتنشّط *ʕitnaffaṭ* /vi/ to be stimulated. - iva *mitnaffaṭ*.

ن ش ع

نسع *nafaɛ̨ (a)* /vi/ to seep, filter. *bi-yimlis il-ɣuny[a] ɛ̨afaan il-mayya ma-tinfaɛ̨-f[i] ɛ̨andu* he seals the sides of the canals so that the water does not seep onto his land. - vn *nafɛ̨, nafaɛ̨aan*; ava *naafiɛ̨*.

نسّع *naffaɛ̨* /vi/ to allow slight seepage. *ʕil-ħeeṭa bi-tnaffaɛ̨* the wall lets in the damp. - vn *tanfiiɛ̨*; ava *minaffaɛ̨*.

ن ش ف

نشف *nifif (a)* /vi/ **1** to become dry. *ʕil-ɣasiil nifif ɛ̨al-ħabl* the washing dried on the line. ‖*riiq-u nifif* (1) his spittle dried, he felt thirsty. (2) he was put to great trouble. (3) he became exasperated. - *damm-i nifif* ≈ my blood curdled (with fear). **2a** to become firm, become hard. *ħasseet ħaaga zayy il-ɛ̨aḍma taḥt[i] ḍluuɛ̨-i w-baqit tinfaf* I felt something like a bone beneath my ribs and it was turning hard. **2b** to become tough and hardy. *ʕig-geef xallaa-ni ʕanfaf* the army made a man of me. **3** to become lean. - vn *nafafaan, nufufiyya*; ava *naafif, naffaan*.

نشوفيّة *nufufiyya* /n/ **1** dryness. **2a** solidity, hardness. **2b** brittleness. **3** toughness, hardiness.

ناشف *naafif* /adj */ **1** dry. *riiq-i naafif ḥ-amuut mil-ɛ̨aṭaf* my spittle is dry; I'll die of thirst. ‖ *ʕiid-u naffa* he's tight-fisted. - *dimaaɣ-u naffa* (1) he's obstinate. (2) he can smoke a lot without getting befuddled (in the jargon of hashish-smokers). **2a** firm, hard. *quuṭa naffa w-mistiwiyya* firm ripe tomatoes. **2b** brittle. *naħaas naafif* a brittle alloy of brass.

أنشف *ʔanfaf* /el/ drier/driest, harder/hardest etc.

نشّاف *naʃʃaaf* (also *waraq naʃʃaaf*) /n/ blotting paper.
نشّافة *naʃʃaafa* /unit n, pl *-aat*/ piece of blotting paper, blotter.
نشّف *naʃʃif* /vt/ **1** to dry. *naʃʃift iday-ya* I dried my hands. *naʃʃif il-ḥibr* blot the ink! **2a** to harden. *ʃis-siqiyya bi-tnaʃʃif il-ḥadiid* tempering hardens iron. **2b** to toughen up, make hardy. - vn *tanfiif*; ava *minaʃʃif*.
اتنشّف *ʃitnaʃʃif* /vi/ **1** to be dried or dry oneself. **2a** to be hardened. **2b** to be toughened up, be made hardy. - ava/iva *mitnaʃʃif*.
استنشف *ʃistanʃif* /vt/ **1** to consider (too) hard or tough. *ʃistanʃif il-faṣulya ma-rḍii-ʃ yiftirii-ha* he thought the beans too hard and refused to buy them. **2** to select for toughness. *ʃistanʃif-lak waaḥid rayyis ɛafaan yiɛraf yimaʃʃi l-ɛummaal* find yourself a tough foreman so that he can control the workers. **3** to act tough. - iva *mistanʃif*.

ن ش ق
نشق *naʃaq (u)* /vt/ to inhale through the nose, sniff up. *naʃaqit mayya ktiir laakin in-naziif barḍu ma-wqif-ʃ* she sniffed a lot of water through her nose but the bleeding wouldn't stop. - vn *naʃq, naʃaqaan*; ava *naaʃiq*.
نشوق *niʃuuq, nuʃuuq* /n/ snuff.
نشّق *naʃʃaq* /vt/ to make (s.o.) sniff. - vn *tanfiiq*; ava/pva *minaʃʃaq*.
تنشيقة *tanfiiqa* /n pl *-aat, tanaʃiiq*/ **1** an amount (of, e.g., snuff) sufficient for a single sniff. **2** a pinch (of s.th. powdery). *tanfiiqit misk* a pinch of musk.
اتنشّق *ʃitnaʃʃaq* /vi/ **1** to be made to sniff. **2** to take snuff. - ava/iva *mitnaʃʃaq*.
استنشق *ʃistanʃaq* **1** /vt/ to inhale through the nose, sniff up. **2** /vi/ to clean the nose three times by sniffing water into it and then expelling the water (as a part of the ablutions obligatory before the performance of any of the Muslim ritual prayers). - vn *ʃistinʃaaq*; ava *mistanʃaq*.

ن ش ل
نشل *naʃal (i)* /vt/ **1** to scoop (out of liquid). *naʃal il-laḥma miʃ-ʃurba bil-maṣfa* he scooped the meat out of the soup with a straining spoon. *naʃalu talatiin gussa min il-ʃutubiis il-ɣarqaan* they fished thirty bodies out of the submerged bus. **2a** to pick the pocket of. *naʃal-ni fiz-zaḥma* he picked my pocket in the crowd. **2b** to pick (s.th.) from a pocket. *naʃal maḥfaẓt-i* he picked my wallet from my pocket. - vn *naʃl, naʃalaan*; ava *naaʃil*; ava *manʃuul*.
نشّال *naʃʃaal* /n */ pickpocket.
اتنشل *ʃitnaʃal* /vi/ **1** to be scooped or lifted out of liquid. **2a** to have one's pocket picked. **2b** to be picked from a pocket. **3** to feel relieved, feel uplifted. - ava/iva *mitniʃil*.
انتشل *ʃintaʃal* **1** /vt/ to lift, raise up, retrieve (out of s.th.) *ʃintaʃalu l-markib il-ɣarqaana bil-winʃ* they raised the sunken boat using a crane. **2** /vi/ to be uplifted, be relieved. *saaɛit ma ʃuft id-duktoor gaay intaʃalt* when I saw the doctor coming I felt unburdened. - vn *ʃintiʃaal*.

ن ش ن [1]
نشان، نيشان *naʃaan, niʃaan* <T *nişan*> /n/ **1** aim, aiming. *naʃaan-ak maẓbuuṭ* your aim is good. **2** sight (on a firearm). *ʃin-naʃaan bitaaɛ il-bunduqiyya maẓbuuṭ* the sight of the rifle is accurate. **3** target-shooting game. — /pl *nayaʃiin*/ **4** medal, decoration. - *ʃin-naʃaan* /coll n/ **5** the small gifts (usually of food) given to a bride by friends, neighbours etc.
نشانجي *naʃangi, niʃangi* /n pl *-yya*/ **1** marksman, sharpshooter. **2** good marksman, good shot.
نشّن *naʃʃin* **1** /vi/ to take aim. *naʃʃin ɛag-goon* he aimed at the goal. **2** /vt/ to aim (s.th.). *naʃʃin il-bunduqiyya kwayyis* aim the rifle properly! - vn *tanfiin*; ava *minaʃʃin*.
انتشن *ʃitnaʃʃin* /vi/ **1** (impersonal) passive of *naʃʃin* 1. *mumkin yitnaʃʃin ɛalee min hina* it can be aimed at from here. **2** to be aimed. - iva *mitnaʃʃin*.

ن ش ن [2] see ق ش ا ن : *niʃaani*

ن ش و
نشوة *naʃwa* /n/ elation, ecstacy.
انتشى *ʃintaʃa* /vi/ to feel elated. *ʃiribt il-biira wi-ntaʃeet* I drank the beer and felt on top of the world. - ava *mintiʃi*.

ن ش ى [1]
نشا، نشاء *niʃa* /n/ starch.
نشوى *niʃawi* /adj/ starchy.
نشويّات *niʃawiyyaat* /n pl/ carbohydrates.
نشّى *naʃʃa* [2] /vt/ to starch. *naʃʃi l-yaqaat* starch the collars! - vn *tanfiyya*; ava/pva *minaʃʃi*.
منشّى *minaʃʃi* /adj */ **1** elegantly dressed, spruce. **2** *[slang]* starchy, stuffy, prim.
اتنشّى *ʃitnaʃʃa* /vi/ to be starched. - iva *mitnaʃʃi*.
متنشّى *mitnaʃʃi* = *minaʃʃi* 1.

ن ش ى [2] see ن ش ء : *manʃiyya*

ن ص ب [1]

نصب *naṣab (u)* **1** /vt/ to set up, erect, prepare. *naṣabna l-xeema* we pitched the tent. *naṣabna-lhum faxx* (1) we played a trick on them. (2) we laid a trap for them. ‖*naṣab ɋaɛda* to hold a gathering. **2** /vi/ to practise deception or trickery. *ʕid-daggaliin bi-yintihzu l-furṣa di w-yunṣubu ɛala n-naas* the con men seize this opportunity and take people in. - vn *naṣb*; ava *naaṣib*; pva *manṣuub*.

نصب *naṣb, nuṣb[1]* /n/ erection. *naṣb[i] tizkaari* monument.

نصبة *naṣba* /n pl *-aat*/ **1** /inst n/ **1a** a setting-up, a standing. *manṣuub naṣbit ig-gabal* standing (as firm) as the hills. **1b** a tricking, a swindling. **2** vendor's stall. **3** *[Isl]* stone post erected over a grave to indicate the position of the head and sometimes inscribed with the name of the deceased and verses from the Koran.

نصب *nuṣb[2]↑: nuṣb[i] ɛeen(ee)* in front of, before the eye(s) of.

أنصب *ʕanṣab* /el/ craftier/craftiest.

نصاب *niṣaab↑* /n/ quota. *kull[i] mudarris luu niṣaab* each teacher has a prescribed teaching load.

نصيب *naṣiib* /n/ **1** share, portion. *kull[i] waaḥid ḥa-yaaxud naṣiib-u mil-ʕarbaaḥ* everyone will get his share of the profits. ‖ *ʕeeh naṣiib-ak min ism-ak* ≈ how well-matched are you and your name? (thus a girl named *ʕamaal* may be asked this in the sense 'Are you as optimistic as your name (lit: hopes) implies?'). **2** lot, destiny. *kull[i] fee ʕ ɋisma w-naṣiib* everything is a matter of fate. *ma-ḥadd[i]-ʃ yaaxud ʕilla naṣiib-u* no one gets more than his fate ordains. *ʕin ʃa-lla ʃ-ʃaqqa tkuun min naṣiib-ak* I hope you succeed in getting the flat. ‖ *ʕiddaa naṣiib-u* or *ʕiddaa lli fii ʕin-naṣiib* he gave him what he could afford at the time, he gave him a modest tip. see further under ى ن ص ى ب

نصّاب *naṣṣaab* /n */ confidence trickster, swindler.

منصب *manṣab, manṣib* /n pl *manaaṣib*/ office, position. ‖*miʃ bitaaɛ manaaṣib* not one who lusts after high positions.

منصاب *minṣaab* or *munṣaab* /n pl *manaṣiib*/ handle of a tool.

انتصب *ʕitnaṣab* /vi/ **1** to be set up, be erected. **2** (impersonal) passive of *naṣab* 2. *miʃ ʕana lli yitniṣib ɛalayya* I am not one to be taken in. **3** to start, get under way (of a social gathering, get-together etc.). - ava/iva *mitniṣib*.

نصّب *naṣṣab* /vt/ to appoint (to a job or position). *naṣṣabt-ak rayyis hina* I (hereby) make you boss here. - vn *tanṣiib*; ava/pva *minaṣṣab*.

انتصّب *ʕitnaṣṣab* /vi/ to be appointed (to a job or position). - iva *mitnaṣṣab*.

انتصب *ʕintaṣab* /vi/ **1a** to have an erection. **1b** to be capable of having an erection. **2** to become erect. - vn *ʕintiṣaab*; ava/iva *mitniṣib*.

ن ص ب [2] see ص و ب [1] : *niṣiiba*

ن ص ح

نصح *naṣaḥ (a)* **1** /vt/ to advise. *naṣaḥt-u bass[i] ma-smiɋ-ʃ ik-kalaam* I advised him but he paid no heed. **2** /vi/ to become alert, give one's attention. *ʕinṣaḥ lil-ɛiyaal* keep an eye on the children. - vn *nuṣḥ, naṣaḥaan, naṣaaḥa*; ava *naaṣiḥ*; pva *manṣuuḥ*.

نصاحة *naṣaaḥa* /n/ sharpness, intelligence, brightness. *ʕil-wad-da ʕaaxir naṣaaḥa* this kid's really smart.

ناصح *naaṣiḥ* /adj * and pl *nuṣaḥa*/ clever, intelligent, bright. ‖*geet ya naaṣiḥ [deris]* back already, you clever dick!

أنصح *ʕanṣaḥ* /el/ more/most clever, intelligent or bright.

نصيحة *naṣiiḥa* /n pl *naṣaayiḥ*/ piece of advice.

انتصح *ʕitnaṣaḥ* /vi/ to be advised. - iva *mitniṣiḥ*.

نصّح *naṣṣaḥ* /vt/ to enlighten, make aware, instruct. *naṣṣaḥ ibn-ak fiwayya w-xallii yaaxud baal-u* put your son wise to a few things and make him watch his step! - vn *tanṣiiḥ*; ava/pva *minaṣṣaḥ*.

انتصّح *ʕitnaṣṣaḥ* /vi/ **1** to be enlightened, be made aware, be instructed. **2** to become alert. - ava/iva *mitnaṣṣaḥ*.

استنصح *ʕistanṣaḥ* **1** /vt/ to select for intelligence. **2↓** /vi/ to be alert, be sharp. - ava *mistanṣaḥ*.

ن ص ر [1]

نصر *naṣar (u)* /vt/ **1** to side with, take the part of. *ʕabuu-ya tamalli b-yunṣur ʕaxuu-ya ɛalayya* my father always takes my brother's part against me. **2** to cause to be successful. *rabb-i-na naṣar-ni fil-ɋaḍiyya* God gave me victory in the case. *ʕallaah yunṣur-ak ɛala lli yɛadii-k* God grant you victory over your enemies! ‖*yunṣur diin-ak* ≈ well done! - vn *naṣr*; ava *naaṣir*; pva *manṣuur*.

نصر *naṣr* /n/ **1** victory. **2** good fortune, success. *daɛɛet-lu bin-naṣr* I wished him success.

نصرة *naṣra* /inst n, pl *-aat*/ a granting of victory.

ناصر *naaṣir* /n/ Granter of victory (epithet of God).

ناصرى *naaṣiri* **1** /adj/ Nasserite. **2** /n */ a Nasserite.

الناصريّة *ʕin-naaṣiriyya* /n/ **1** quarter in Cairo between the Sayyida Zaynab and Abdin districts. **2** Nasserism.

نصير *naṣiir* /n pl *nuṣara*/ helper, protector, supporter. *rabb-i-na ḍayman naṣiir il-maẓlumiin* God always helps the oppressed.

منصر *manṣar* /n/ *[obsol]* gang of robbers. *ʃeex manṣar* or *raas manṣar* (1) leader of a criminal gang, robber baron. (2) epithet for a clever cunning person, clever devil.

ناصر *naaṣar↑* /vt/ to support, side with, help. -vn *minaṣra*; ava *minaaṣir*.

اتناصر *ʃitnaaṣir* /vi/ to be supported, be helped, be sided with. -iva *mitnaaṣir*.

انتصر *ʃintaṣar* /vi/ to triumph, win. -vn *ʃintiṣaar*; ava *mintiṣir*.

انتصار *ʃintiṣaar* /n pl *-aat*/ victory.

ن ص ر 2

نصراني *nuṣraani, naṣraani↑* /n * and pl *naṣaara*/ Christian. ‖*gawaazit naṣaara* (a marriage of Christians, i.e. one not easily dissolved by divorce) an unbreakable bond.

نصّر *naṣṣar* /vt/ **1** to convert to Christianity, Christianize. **2↓** to baptize. -vn *tanṣiir*; ava *minaṣṣar*.

التناصير *ʃit-tanaṣiir* (also *ḫadd it-tanaṣiir*) /n/ *[Chr]* Baptism Sunday (the Sunday before Palm Sunday).

اتنصّر *ʃitnaṣṣar* /vi/ **1** to convert or be converted to Christianity, become a Christian. **2↓** to be baptized. -ava/iva *mitnaṣṣar*.

استنصر *ʃistanṣar* /vi/ to become a Christian, convert to Christianity. -ava *mistanṣar*.

ن ص ص 1

نصّ *naṣṣ'↑ (u)* /vi/ to make a stipulation (or stipulations). *ʃil-qanuun bi-ynuṣṣ[u] ɛala* ... the law stipulates .... -vn *naṣṣ*; ava *naaṣiṣ*; pva *manṣuuṣ*.

نصّ *naṣṣ[2]* /n pl *nuṣuuṣ*/ **1** stipulation, clause (e.g., of a law). **2** text, script. ‖*bin-naṣṣ* in precise terms, exactly.

منصّة *manaṣṣa* /n pl *-aat*/ dais, podium. *manaṣṣit il-quḍaah* the judges' bench.

اتنصّ *ʃitnaṣṣ* /vi/ (impersonal) passive of *naṣṣ'*. *ʃil-kalam-da ma-tnaṣṣ'-ʃ ɛalee fil-ɛaqd* this was not stipulated in the contract. -iva *mitnaṣṣ*.

ن ص ص 2

نصّ *nuṣṣ* /n pl *niṣaaṣ, ʃanṣaaṣ*/ **1** half. *nuṣṣ' saaɛa* half an hour. *gineeh wi-nuṣṣ* a pound and a half. *nuṣṣ' kariim* semi-precious. *nuṣṣ' ʃutumatiik* semi-automatic. ‖*xasseet in-nuṣṣ* I lost a great deal of weight. -*nuṣṣ' nuṣṣ* half and half, so-so, as in *ʃil-masraḫiyya kaanit nuṣṣ' nuṣṣ* the play was only so-so. -*(bi-)nuṣṣ' kumm* short-sleeved. -*nuṣṣ' ɛumr* used, not new, second-hand, as in *ɛarabiyyaat nuṣṣ' ɛumr* used cars, *raagil* (or *mara) nuṣṣ' ɛumr* a man (or a woman) without much life left in him (or her). -*faat-ak nuṣṣ' ɛumr-ak* you missed something great. -*kammil nuṣṣ' diin-u* to get married (of a man). -*raagil fibr' w-nuṣṣ* shorty (of a man). -*ɛala waḫda w-nuṣṣ* see *waaḫid*. -... *wi-nuṣṣ* certainly, definitely, as in *ḫa-tquum bil-ʃagaaza*. - *ḫ-aquum biiha w-nuṣṣ* 'Are you going to take your holiday?' 'I certainly am!' *ʃii ʃalam fi-kitf-ak*. - *ʃii ʃalam wi-nuṣṣ* 'Do you have a pain in your shoulder?' 'Yes, a dreadful pain!' -*ʃin-nuṣṣ' bın-nuṣṣ* in half, in two, as in *nitqaasim il-filuus in-nuṣṣ' bin-nuṣṣ* we split the money two ways. -*nuṣṣ' ʃıkliil [Chr]* formal betrothal service. **2** halfway point, middle. *nuṣṣ il-leel* midnight. *fi-nuṣṣ il-ʃusbuuɛ* in the middle of the week. *fi-nuṣṣ iṣ-ṣiniyya* in the middle of the tray. ‖*(leelit) nuṣṣ' ʃaɛbaan* the night of the fifteenth day of the month of Shaban, on which religious Muslims commemorate the changing of the direction of the *qibla* from Jerusalem to Mecca. -*ʃams-ak wi-nuṣṣ il-leel* openly, for all to see, as in *ʃana ma-b-axabbii-ʃ ḫaaga ɛan ḫadd' minkum ʃams-ak wi-nuṣṣ il-leel* I don't hide a thing from any of you, everything is on the table. **3** (also *nuṣṣ' faḍḍa) [obsol]* one para, a coin equal to one fortieth of a piastre. ‖*liɛbit in-nuṣṣ* a simple gambling game turning on the toss of a coin or substitute. **4** half-piece at the edge of a section in tent appliqué designs (see Pl.H, 2).

نصّص *naṣṣaṣ* /vt/ **1** to halve, take (away) the half. *yinaṣṣaṣ is-sigaara wi-ysib-ha* he half-smokes a cigarette and leaves it. **2** to fill half-way. *laqeet-u naṣṣaṣ iṣ-ṣahriig* I found that he had half-filled the water tank. -vn *tanṣiiṣ*; ava/pva *minaṣṣaṣ*.

اتنصّص *ʃitnaṣṣaṣ* /vi/ passive of *naṣṣaṣ*. -iva *mitnaṣṣaṣ*.

ن ص ع

نصع *naṣaɛ (a)* /vi/ to become bright. *wiʃʃ-a-ha naṣaɛ* her face lit up. -vn *naṣaɛaan, nuṣuɛiyya*; ava *naaṣiɛ*.

ناصع *naaṣiɛ* /adj/ bright. *naaṣiɛ ıl-bayaaq* gleamingly white.

أنصع *ʃanṣaɛ* /el/ brighter/brightest.

ن ص ف 1

نصف *niṣf↑* /n pl *ʃanṣaaf*/ half. ‖*ʃanṣaaf ḫuluul* compromises, middle-of-the-way solutions.

نصفي *niṣfi↑* /adj/ pertaining to or affecting one half, partial. *falal niṣfi* hemiplegia.

مناصفة *munaṣfa, minaṣfa* /adv/ in half, in two equal parts. *wazzaɛu l-maksab munaṣfa benhum* they split the profit half and half between themselves.

ن ص ف 2

نصف *naṣaf (i)* /vt/ **1** to relieve of injustice. *ma-ḫadd'-ʃ naṣaf-u ʃilla l-mudiir ig-gidiid* no one gave him his full

rights except the new director. **2**↓ to treat nicely. ‖*ma-b-tinṣif-f*^{i} *nafs-a-ha* (she doesn't do herself justice) ≈ she's always making trouble. -*rabb-i-na yinṣif-ak wi-tirgaɛ badri* I hope you will come back early this time (without your usual dilly-dallying). -vn *naṣafaan, naṣf*; ava *naaṣif*; pva *manṣuuf*.

نصفة *naṣafa: yaɛni huwwa (hiyya, humma) lli naṣafa* is he (she, they etc.) any better?

أنصف ʔanṣaf^{i} /el/ more/most just or fair.

اتنصف ʔitnaṣaf /vi/ passive of *naṣaf*. -iva *mitniṣif*.

أنصف ʔanṣaf^{2}↑ = *naṣaf* 1. *ʔil-ʔinṣaaf [admin]* general salary adjustment. -vn *ʔinṣaaf*; ava *munṣif*.

انتصف ʔintaṣaf /vi/ to do the right thing (as an exception). *ʔintaṣafit wi-ɤasalit wiff-a-ha* for once she's washed her face! -ava *mintiṣif*.

ن ص ل

نصل *naṣal (u)* **1** /vt/ to throw or hurl to the ground. *ʃaal-u w-naṣal-u fil-ʔarḍ*^{i} *kaan ḥa-ymawwit-u* he picked him up and threw him on the ground almost killing him. **2** /vi/ to recuperate, regain health. *ʔil-waad naṣal taani baɛd il-ɛaya* the kid has recuperated after his sickness. -vn *naṣl, naṣalaan*; ava *naaṣil*; pva *manṣuul*.

نصلة *naṣla* /pl -*aat*/ instance noun of *naṣl*.

اتنصل ʔitnaṣal /vi/ to be thrown or hurled to the ground. -iva *mitniṣil*.

نصّل *naṣṣal* /vt/ to smash, wreck, destroy. *ɢaɛad yiḍrab il-ɛaṣaaya fil-ḥeeṭ li-ɤaayit ma naṣṣal-ha xaaliṣ* he kept on banging the stick against the wall until he smashed it completely. -vn *tanṣiil*; ava/pva *minaṣṣal*.

اتنصّل ʔitnaṣṣal /vi/ **1** to be smashed, be wrecked, be destroyed. **2** to exculpate oneself, deny responsibility. *ʔitnaṣṣal mil-ɤalaṭ illi ɛamal-u* he wriggled out of taking responsibility for his mistake. -ava/iva *mitnaṣṣal*.

ن ص ى

ناصية *naṣya* /n pl *nawaaṣi*/ corner (of a building or street). ‖ *ʔaqdaam wi-ʔaɛtaab wi-nawaaṣi* see *qadam*.

ن ض ج

نضج *naḍag*↑ *(u)* /vi/ to mature (of, e.g., a personality). *faxṣiyya naḍga* a mature personality. *fikra naḍga* a mature idea. -vn *nuḍg, nuḍuug, naḍagaan*; ava *naaḍig*.

أنضج ʔanḍag^{i} /el/ more/most mature.

أنضج ʔanḍag^{2}↑ /vt/ to bring to maturity. *ʔis-siniin ʔanḍagit-u* time gave him maturity. -vn *ʔinḍaag*; ava *munḍig*.

استنضج ʔistanḍag /vt/ to select for maturity. -ava *mistanḍag*.

ن ض ح

نضح *naḍaḥ (a)* /vi/ to ooze, seep. *ʔil-ɢaraq naḍaḥ ɛag-gallabiyya* the sweat seeped through onto the galabiya. *ʔil-ʔalwaan bi-tinḍaḥ ɛala baɛḍ-a-ha* the colours run together. -vn *naḍḥ, naḍaḥaan, nuḍuuḥ*; ava *naaḍiḥ*.

ن ض ر see ن ظ ر: *naḍar, naḍḍaara, naḍḍaraati, manḍara*

ن ض ف

نضف، نظف *niḍif* or *nuḍuf (a)* /vi/ **1** to become clean. *ʔidɢak-ha lamma tinḍaf* scrub them till they're clean! ‖*geeb-i niḍif* ≈ I'm flat broke. -*ḥisaab-ak niḍif* your account is settled. **2** to improve in character, appearance etc. *gallidt ik-kitaab wi-ʃakl-u niḍif* I had the book bound and it looked better. *raaɛa rabb-i-na w-niḍif* he saw the error of his ways and went straight. *ʔil-ɛarabiyya niḍfit ɢawi min yoom ma l-bujehaat itɤayyarit* the car's been much better since the sparking plugs were changed. *ʔir-radyu ṣoot-u niḍif* the radio's sound quality improved. -vn *naḍaafa*; ava *naḍfaan*.

نضافة، نظافة *naḍaafa, naẓaafa* /n/ **1** cleanliness. *ʔin-naḍaafa min il-ʔimaan [prov]* ≈ cleanliness is next to godliness. **2** *ʔin-naḍaafa* (also *ḍariibit in-naḍaafa*) the tax levied on householders to cover street-cleaning etc.

نضيف، نظيف *niḍiif* /adj pl *nuḍaaf*/ **1a** clean. *fil-ɛiid bi-yilbisu hduum gidiida walla nḍiifa* on the day of the feast they put on new or clean clothes. ‖*geeb-i nḍiif* my pockets are cleaned out, I'm broke. **1b** free of impurities. *law kaanit in-naḥaasa mif niḍiifa ma-tiḳbal-ʃ il-liḥaam* if the piece of copper isn't pure it won't take soldering. *ţuul ma z-zeet niḍiif il-babuur yitann-u kwayyis* so long as the oil is clean the stove continues to work well. **2a** decent in appearance, neat and proper. *bi-yiɛmil it-tafaṭiib ɛaʃaan yibḳa ʃakl-a-ha nḍiif* he adds the finishing touches to it so that it looks properly done. **2b** (morally) decent, upright, honest. *raagil niḍiif ma-huwwaa-ʃ bitaaɛ ʔakl* an honest man, not the sort to take bribes. *ʔiḥna b-nixdim ɛaʃaan nifḍal ɛayʃiin nuḍaaf bi-ʃaraf-na* we work as servants so that we may continue to live a decent and honourable life. **3** of high standard, excellent. *ʃuɤl*^{i} *nḍiif* good work. *xaṭṭaaṭ niḍiif* an excellent calligrapher. *liɛib liɛba nḍiifa* he played a great shot.

أنظف، أنضف ʔanḍaf /el/ more/most clean, neat, decent etc.

نظّف، نضّف *naḍḍaf* /vt/ **1** to clean, clean up, tidy up. *naḍḍaft*^{i} *snaan-ak* have you cleaned your teeth? *ʔil-ʃarraʃiin illi bi-ynaḍḍafu l-makaatib* the janitors who

clean the offices. *bi-nnaḍḍaf il-ʃarḍ' bif-fooka* we clear the ground with the rake. **2** to clean out (s.o.) of money. *ʃin-naffaal naḍḍaf-ni* the pickpocket cleaned me out. **3** to clear away, get rid of. *naḍḍaf il-waraq illi ɛal-maktab* clear off the paper that's on the desk. *ɛafaan niḥfi btingaan laazim ninaḍḍaf qalb-u* in order to stuff eggplants we must (first) clean out the insides. **4** to improve the appearance or character of, give finish or polish to. **5** *[carp, metal]* to smooth, plane. *ʃil-xafab il-ʁafiim laazim ninaḍḍaf-u l-ʃawwil* we have to smooth the rough wood first. **6** *[needlew]* to neaten. *ʃiriit tanḍiif* seam binding tape. **7** to depilate. *naḍḍafit riglee-ha* she removed the hair from her legs. - vn *tanḍiif*; ava/pva *minaḍḍaf*.

منظّف، منضّف *munaẓẓif* /n pl *-aat*/ cleanser.

اتنظّف، اتنضّف *ʃitnaḍḍaf* /vi/ passive of *naḍḍaf*. **2** to become clean. - ava/iva *mitnaḍḍaf*.

استنظف، استنضف *ʃistanḍaf* /vt/ **1** to consider *niḍiif*. **2** to select for cleanliness. *ʃistanḍaf ḥitta nuqɛud fiiha* choose a clean place for us to sit in. — /vi/ **3** to behave in a straightforward fashion. *ma tistanḍaf baqa ya ɛamm' w-balaaf fuxl in-naṣb' da* play it straight, man, and let's have none of this trickery. - vn *ʃistinḍaaf*; ava/pva *mistanḍaf*.

ن ط ح

نطح *naṭaḥ (a)* /vt/ **1** to butt, toss (with the horns). ‖*gineeh yinṭaḥ gineeh* ≈ honest-to-goodness pounds, real one-hundred-piastre-apiece pounds, as in *dafaɛt' xamsa gneeh gineeh yinṭaḥ gineeh* I paid a whole five solid pounds. - *ʃawwil ma yiftaḥ yinṭaḥ* as soon as he takes a course (of action) he goes (too) far. **2** to reply to rudely, treat roughly. - vn *naṭḥ, naṭaḥaan*; ava *naaṭiḥ*; pva *manṭuuḥ*.

نطحه *naṭḥa* /inst n, pl *-aat*/ a butt.

ناطحه *naaṭiḥa* /n pl *-aat*/: *naaṭiḥat saḥaab* skyscraper.

نطّاح *naṭṭaaḥ* /adj/ given to butting (of sheep etc.). *ʃis-saḥḥ id-daḥḥ ya xaruuf naṭṭaaḥ* children's chant urging a ram to butt.

انتطح *ʃitnaṭaḥ* /vi/ to be butted. - iva *mitniṭiḥ*.

ناطح *naaṭiḥ* /vt/ to butt, have a butting match with. *ʃik-kabfeen bi-ynaṭḥu baɛḍ* the two rams are butting each other. - vn *niṭaaḥ, minaṭḥa*; ava *minaaṭiḥ*.

اتناطح *ʃitnaaṭiḥ* /vi/ **1** to butt one another, have a butting match with one another. **2** to be butted at. - ava/iva *mitnaaṭiḥ*.

ن ط ر ¹

نطر *naṭar (u)* /vi/ to rain. *ʃid-dinya naṭarit zalaṭ* (1) it hailed. (2) it rained cats and dogs.

نطرة *naṭara* /n/ rain. - also *maṭara*.

نطّر *naṭṭar* /vi/ to rain. (*ʃid-dinya* or *ʃin-naṭara) naṭṭarit* it rained. (*ʃid-dinya* or *ʃin-naṭara) bi-tnaṭṭar* it is raining. - also *maṭṭar*. - vn *tanṭiir*; ava *minaṭṭar*.

اتنطّر *ʃitnaṭṭar* /vi/ (impersonal) passive of *naṭṭar*. *ʃilaah-i yitnaṭṭar ɛaleehum zift' w-qaṭraan [women in trad soc]* ≈ may dirt and filth be rained down on them! - iva *mitnaṭṭar*.

ن ط ر ² see ² ن ط و ر : *naṭuur*

ن ط ر و ن

نطرون *naṭruun* /n/ natron. ‖*waadi n-naṭruun* /prop n/ Wadi Natrun, a valley in the Western Desert on the road between Cairo and Alexandria, celebrated for its ancient hermitages and monasteries.

ن ط ط

نطّ *naṭṭ (u)* /vi/ **1** to jump, make a jump. *naṭṭeet mil-qaṭr* I jumped from the train. ‖*kull' fwayya tnuṭṭ-i-lna hina fil-beet* she's always barging in on us at home. - *ʃif-farr' ḥa-ynuṭṭ' min ɛeen-u* ≈ he is looking daggers, he is glaring. - *ʃiftakarna l-ɣuṭṭ' ga ynuṭṭ* ≈ talk of the Devil! - *naṭṭ' fiiha* to spoil things by interfering, as in *ma daam ʃinta naṭṭeet fiiha tibqa baazit* as long as you've interfered, all is lost. **2** to proceed out of sequence, skip. *ʃiẓ-ẓaahir ʃinnu bi-ynuṭṭ - gaayiz bi-yaaxud nimra min fooq w-nimra min taḥt* it appears he's skipping - probably taking one number from the top, then one from the bottom. *ʃil-ʃibra naṭṭit* the needle (of the record-player) jumped. — /vt/ **3** to jump (a distance). *ʃil-masafaat illi naṭṭenaa-ha* the distances we jumped. ‖*naṭṭ il-ḥabl* (the game of) skipping. - *naṭṭ il-ḥawaagiz [athl]* hurdling. **4** to skip, leave out. *saɛaat il-mumassiliin bi-ynuṭṭu ṣafḥa ʃaw bi-ynuṭṭu saṭreen talaata* sometimes the actors skip a page or jump two or three lines. **5** to scoop up (a hockey ball) with the stick before striking. - vn *naṭṭ, naṭaṭaan*; ava *naaṭiṭ*; pva *manṭuuṭ*.

¶ *naṭṭ" ɛala [coarse]* to copulate with, ride (a woman).

نطّة *naṭṭa* /inst n, pl *-aat*/ **1** a jump. **2** *ʃin-naṭṭa* a children's game in which the player jumps or hops from one part of a square marked on the ground to another, his movements being dictated by an accompanying chant.

نطّاط *naṭṭaaṭ* /coll n/ young locust(s). ‖*ziɛeeṭ wi-mɛeeṭ wi-naṭṭaaṭ il-ḥeeṭ* see *ziɛeeṭ*.

منطّ *manaṭṭ* /n pl *-aat*/ diving-board.

منطّة *manaṭṭa* /n pl *-aat*/ a wall low enough to be scaled. ‖*huwwa beet-i baqa manaṭṭa li-lli yiswa wi-lli ma-*

yiswaa-ʃ (have things gone so far that) all and sundry may just barge into my house as they please?

اتنطّ *ʔitnaṭṭ* /vi/ **1** passive of *naṭṭ* 3, 4 and 5. **2** (impersonal) passive of *naṭṭ* 1 and 2. - iva *mitnaṭṭ*.

نطّط *naṭṭaṭ* /vt/ **1** to cause to jump. *ʔil-ɣuradaati bi-ynaṭṭaṭ il-ɣird' fif-ʃaariɛ* the monkey-man makes his monkey jump up and down in the street. **2** to cause to bounce. *yifḍal ynaṭṭaṭ ik-koora l-ɤaayit ma yiddii-ha li-zmiil-u* he goes on dribbling the ball till he passes it to his team-mate. **3** to cause to proceed out of sequence, cause to skip. *laɣuu ʃaaṭir naṭṭaṭuu sana* they found he was bright (so) they had him skip a year. - vn *tanṭiiṭ*; ava *minaṭṭaṭ*.

¶ *naṭṭaṭ ɛala* to mate (a male animal) with (a female).

اتنطّط *ʔitnaṭṭaṭ* /vi/ **1** passive of *naṭṭaṭ*. **2** to jump about, jump up and down. - ava/iva *mitnaṭṭaṭ*.

ن ط ع

نطع *naṭɛ* /n pl *ʃanṭaaɛ*/ uncouth person, lout. *ʃanṭaaɛ il-balad* the rabble of the town.

نطاعة *naṭaaɛa* /n/ uncouthness, loutishness.

استنطع *ʔistanṭaɛ* /vt/ **1** to select for uncouthness. **2** to reject for uncouthness. — /vi/ **3** to behave uncouthly, behave like a lout. - vn *ʔistinṭaaɛ*; ava *mistanṭaɛ*.

ن ط ف

نطفة *nuṭfa* /n pl *-aat, nuṭaf*/ **1** drop. **2** sperm. *ʃabuu-ha maat wi-hiyya lissa nuṭfa f-baṭn' ʃumm-a-ha* her father died when she was still unborn.

ن ط ق ¹

نطق *naṭaq (a)* /vi/ **1** to speak, give voice. *ma-naṭaqt'-ʃ bi-kilma* I didn't utter a word. ‖*naṭaq bil-ḥukm [leg]* to give a ruling, as in *ʔil-qaḍiyya tʃaggilit lin-nuṭq' bil-ḥukm* the case has been adjourned till the verdict is pronounced. - *ʔinṭaq* a brusque and offensive command to speak ≈ open your mouth! - *da rasm' ḥa-yinṭaq* the picture's so good it almost seems to speak! - *xalla s-siggaada tinṭaq* ≈ he fixed the carpet like a dream! - *ʔil-xaaliq in-naaṭiq* ≈ the spit and image; as in *da l-xaaliq in-naaṭiq ʃaxuu* he's the spit and image of his brother. **2** to sprout, spring up. *ʔis-simbila naṭaqit* the wheat ear burgeoned. **3** to toss or throw off. *naṭaqt-u min ɣala qahr-i* I tossed him off my back. — /vt/ **4**↑ to pronounce. *bi-yinṭaq ʔingiliizi kwayyis* he pronounces English well. **5** to put forth (leaves, flowers etc., of a plant). *ʔil-qamḥ' b-yinṭaq is-simbila* the wheat puts forth its ears. - vn *naṭq, nuṭq*; ava *naaṭiq*; pva *manṭuuq*.

نطق *nuṭq* /n/ **1** pronunciation. *ʔik-kilmaa-di nuṭq-a-ha ʔizzaay* how is this word pronounced? **2** enunciation. *nuṭq-u miʃ kiwayyis* he does not enunciate well.

منطق *manṭaq: ma-ḥaṭṭ'-ʃ manṭaq* (he dropped to the ground, he fell dead etc.) without uttering a sound.

منطق *manṭiq, manṭiq* /n/ logic.

منطقي *manṭiqi, manṭiqi* /adj */ logical.

انطبق *ʔitnaṭaq* /vi/ passive of *naṭaq*. - iva *mitniṭiq*.

نطّق *naṭṭaq* /vt/ **1a** to cause to speak, cause to give voice. *maa-lu qaaɛid saakit kida - ma-ḥadd'-ʃ ɛaarif yinaṭṭaq-u* why's he sitting there so quiet? can't anyone get a word out of him? **1b** to cause to pronounce. *naṭṭaqit-hum kiwayyis* she taught them good pronouciation. **2** to set off to advantage. *ʔil-karafatta z-zarqa ḥa-tnaṭṭaq il-badla* the blue tie really brings the suit to life. **3** to keep (s.th.) in the air by tossing it up repeatedly. - vn *tanṭiiq*; ava *minaṭṭaq*.

انطّق *ʔitnaṭṭaq* /vi/ passive of *naṭṭaq*. - iva *mitnaṭṭaq*.

استنطق *ʔistanṭaq* /vi/ to vomit. - vn *ʔistinṭaaq*; ava *mistanṭaq*.

ن ط ق ²

نطاق *niṭaaq, niṭaaq↑* /n/ range, scope. *bi-yitwazzaɛ ɛala niṭaaq waasiɛ* it is distributed on a wide scale. *niṭaaq il-ɛamaliyyaat [mil]* the scope of operations.

منطقة *manṭiqa, minṭaqa↑* /n pl *manaaṭiq*/ **1** area, district. *manṭiqa sakaniyya* a residential area. **2** administrative zone. *manṭiqa taɛlimiyya* the area under the supervision of a local educational authority. ‖*manṭiqa ḥaddiyya* the upper limit of a tax bracket.

ن ط و ر ¹

نطور *naṭwar* /vt/ to scatter about, strew in a disorderly fashion. *ḥaʃiif minaṭwar* patchy grass. *ma-tnaṭwar-ʃ' fluus-ak kida* don't fritter away your money like that! - vn *naṭwara*; ava/pva *minaṭwar*.

انتطور *ʔitnaṭwar* /vi/ to scatter or be scattered about, disperse or be strewn in a disorderly fashion. - vn *tinaṭwiir*; ava/iva *mitnaṭwar*.

ن ط و ر ²

ناطور *naṭuur* /n pl *nawaṭiir*/ stook or shock of maize stalks.

ن ظ ج see ن ظ ك : *naẓaaga*

ن ظ ر

نظر *naẓar' (u)* /vi/ **1** to look. *ʔin-naas tunẓur-lu b-ɛeen il-iḥtiraam* people regard him with respect. — /vt/ **2** to examine. *laazim nunẓur (f)il-mas ʔala* we must look into the matter. - /the literary passive form occurs/ *ʔig-galsa lli ḥa-tunẓar fiiha d-daɛwa* the session at which the case

will be examined. **3** to jinx, afflict with the evil eye. - vn *naẓar*; ava *naaẓir*; pva *manẓuur*.

نظر *naẓar*[2] /n/ **1** (also *naḍar*↓) eyesight. *naẓar-i ḍiʕif* my sight has become weak. *ma-saddaqt'-ʃ naẓar-i* I couldn't believe my eyes. *da ʃaʏla ʕalayya min naẓar-i* it is dearer to me than my sight. *marma n-naẓar* range of sight, seeing distance. *ya naḍar-i [women in trad soc]* an affectionate form of address ≈ apple of my eye! *ʃilaah-i tiʕma f-naḍar-ak [women in trad soc]* may you be afflicted in your sight! **2a** consideration, estimation. *di ʃafkaar miḥtaaga l-ʃiʕaadit naẓar* these ideas need re-consideration. *ʃin-naas minazzilin-ni min naẓar-hum* people think nothing of me. **2b** judgement, opinion. *da mif ʕeeb ʃilla f-naẓar-ak* that is a fault in your opinion alone. ‖*maʕduum in-naẓar* lacking in *savoir faire*, gauche. - *kull-ak naẓar* I leave it to your discretion. - *ʃana taḥt in-naẓar* I'm at your service, I'm always available.

نظرة *naẓra'* /inst n, pl *-aat*/ a look, a glance. *b-aḥiss' bil-ʕaar li-ʃinn in-naas bi-ybuṣṣuu-li bin-naẓra di* I feel shame because people look at me that way. ‖*naẓra ya ʃumm[a] haaʃim* look upon us, Umm Hashim! aid us, Umm Hashim!

نظرى *naẓari*↑ /adj/ theoretical. *diraasa naẓariyya* theoretical study.

نظريّة *naẓariyya* /n pl *-aat*/ theory. *bi-yidris fikr' syaasi w-naẓariyya syasiyya* he studies political thought and theory. ‖*mif di n-naẓariyya* you haven't got the point, that's not the idea.

ناظر *naaẓir'* /n pl *nuẓẓaar*/ supervisor, overseer. *naaẓir madrasa* headmaster. *naaẓir maḥaṭṭa* station-master.

ناظرة *naẓra*[2] /n pl *-aat*/ headmistress.

نظير *naẓiir* **1** /n pl *naẓaayir, nuẓara*/ peer, equivalent. *ʃif-ʃaay da ma-luu-ʃ naẓiir* this tea is peerless. **2**↑ /prep/ in return for, in consideration of.

نظّارة *naḍḍaara* /n pl *-aat*, also pl *naḍaḍiir [joc]*/ **1** pair of spectacles. *naḍḍaara mʕaẓẓama* (or *mkabbara*) binoculars. *naḍḍaarit mayya* underwater goggles. ‖*naḍḍaarit ʃuksijiin* welder's goggles. **2** *[mil, obsol]* medical centre for examining conscripts for the three forces.

نظّارانى *naḍḍaraati* /n pl *-yya*/ dispensing optician.

منظر *manẓar* /n pl *manaaẓir*/ **1a** sight, spectacle. *manẓar ʁariib* a strange sight. *manẓar yifayyib* a sight to make the hair turn grey. **1b** appearance, outward show. *ʃil-ward' b-yiddi manẓar* the flowers make a (nice) show. *ʃid-dinya manaaẓir [prov]* all that matters in the world is appearances. **2a** scene (of a play). *ʃil-muxrig ḥaawil yurbuṭ il-manaaẓir baʕḍ-a-ha b-baʕḍ* the director tried to tie the scenes to one another. **2b** stage set. **2c** *[cin]* shot.

منظرة *manẓara*[2] **1** /n/ (mere) show, outward (and hypocritical) appearance. *bi-yimsik is-sibḥa lil-manẓara bass* he carries prayer beads merely for the sake of appearances. *bitaaʕ manẓara* a show-off. **2** /adv/ for the sake of showing-off. *bi-yaxdu l-ʕarabiyya manẓara* they treat the car as a status symbol. see further under م ن ظ ر

مندرة *manḍara* (also *mandara*) /n pl *manaaḍir, manaadir/ [rur]* reception room for guests in a village house.

المندرة *ʃil-manḍara* /prop n/ beach and adjacent area in the east of Alexandria.

منظار *minẓaar*↑ /n pl *manaẓiir*/ any of a range of scientific instruments for viewing (as, e.g., a telescope, a photo-scope, a speculum).

انتظر *ʃitnaẓar* /vi/ **1** to be jinxed, be afflicted by the evil eye. **2** (impersonal) passive of *naẓar* 1. *bi-yitnizir-lu bi-ḥtiraam* he is regarded with respect. - iva *mitnizir*.

ناظر *naaẓir*[2] **1** /vt/ to keep a close watch on, watch carefully over. *ʃil-xayyaaṭa laazim tinaaẓir fuʏl-a-ha* the seamstress should watch over her work carefully. **2** to become similar to. *dilwaqti bass' baqu mnaẓriin baʕḍ* only now have they become similar to one another. **3** to debate. — /vi/ **4**↓ to peer, stare. *dayman qaaʕid minaaẓir lil-ʃakl* he is always peering at the food. - vn *minaẓra, niẓaara*; ava *mınaaẓir*.

مناظرة *munaẓra* /n pl *-aat*/ debate.

اتناظر *ʃitnaaẓir* /vi/ passive of *naaẓir*[2]. - ava/iva *mitnaaẓir*.

انتظر *ʃintaẓar* **1** /vt/ **1a** to wait for. *ʃintiẓir-ni fil-beet* wait for me at home. **1b** to expect. *ʃiḥna mintuẓriin-ak ıs-saaʕa xamsa* we're expecting you at five. *kunt' b-tintiẓir ʃinnu ygib-lak ḥaaga* were you expecting him to bring you something? **2** /vı/ to wait. *ʃit-taks' b-yaaxud gineeh ʕala kull' saaʕa ntiẓaar* the taxi charges a pound for each hour of waiting. *ʃitxaṭabna wi-ntaẓarna yiigı sana* we got engaged and waited about a year. - vn *ʃintiẓaar*; ava *mıntiẓir, muntaẓir*.

استنظر *ʃistanẓar* = *ʃintaẓar*. - ava *mıstanẓar*.

ن ظ ف see ن ض ف

ن ظ ك

نظك *nıẓık* = *naẓıik*.

نظاكه *naẓaaka* (also *naẓaaga*) /n/ elegance. *ʕayʃiin ʃaaxır naẓaaka* they are living in style.

نظيك *naẓiik* /adj pl *nuẓaka*/ elegant, swish.

ن ظ م

نظام *niẓaam* /n pl *ʕanẓima, ʕanẓima, nuẓum*/ **1** organization, system, institution. *ʕin-niẓaam it-taɛliimi* the educational system. *ʕil-ḥarb imtiḥaan li-kull il-ʕanẓima lli fil-balad* war is a test of all the institutions in the country. *laazim timʃi ɛala nẓaam fil-ʕakl* you must follow a fixed diet. ‖*fii niẓaam ʕeeh il-lelaa-di* what are the plans for tonight? - *fii niẓaam gooza* we'll be smoking a *gooza*. - *ʕeeh in-niẓaam* what's the idea! **2** type, variety (especially of fixtures etc.). *fii niẓaam taani yirkab bi-masamiir* there is another type which is mounted with nails. *fii niẓaam ism-u divyateer* there is a type called a two-switch system. **3** proper order, orderliness. *ʕayyaam ma kaan fii niẓaam* in the days when things were done properly. ‖*ɛandu nẓaam* he's methodical. - *bi-nẓaam* in order, systematically. **4** *[pol]* régime, political system. *niẓaam iʃtiraaki* socialist system.

نظامى *niẓaami* /adj */ **1** methodical. *ʕana ʕaḥtarim iʃ-faxṣ in-niẓaami* I do respect those who have order in their life. **2** (also *nuẓaami*↓) in regular government service (of military or quasi-military personnel). *ɛaskari niẓaami* a regular soldier (in contrast with a drafted man). *ɤafiir niẓaami* a government-employed night watchman.

أنظم *ʕanẓam* /el/ more/most neat or ordered.

نظّم *naẓẓam* /vt/ to arrange, organize. *fii muʃrif riyaaḍi bi-ynaẓẓam ʕanʃiṭit iṭ-ṭullaab* there is a sports supervisor who organizes the students' activities. - vn *tanẓiim*; ava/pva *minaẓẓam, munaẓẓam*.

تنظيم *tanẓiim* /n pl *-aat*/ organization, grouping. *tanẓiim dimuqraaṭi* a democratic organization. *tanẓiim sirri* an underground organization.

منظّم *munaẓẓim* /n pl *-aat*/ *[mech]* regulator, regulating device.

منظّم *munaẓẓam* /adj */ orderly, well-organized. *ṭabuur ṭawiil wi-munaẓẓam* a long, orderly queue.

منظّمة *munaẓẓama* /n pl *-aat*/ organization. *munaẓẓamit ʃabaab* youth organization.

انتظّم *ʕitnaẓẓam* /vi/ to be arranged, be organized. - iva *mitnaẓẓam*.

انتظم *ʕintaẓam* /vi/ to become regular. *xadt il-birʃaam wi-fiɛlan intaẓamit il-ʕiks* I took the pill and my periods did in fact become more regular. *baɛd il-ʕagaaza ḥa-nintiẓim fiʃ-ʃuɤl* after the holiday we shall start working on a regular basis. - vn *ʕintiẓaam*; ava *muntaẓim*.

ن ع ت

نعت *naɛt*↑ /n pl *nuɛuut*/ **1** description. **2** *[gram]* adjective.

ن ع ج

نعجة *naɛga* /n pl *-aat*/ ewe. ‖*siib in-naɛga ya xaruuf [children, abus]* leave the ewe alone, you ram (remark shouted at a man and a woman walking together in the street).

ن ع ر

نعر *naɛar (a)* /vi/ **1** to shout, bellow, roar. *bukra tismaɛ naɛiir-u* (give him time and) you will soon hear him holler! (of s.o. following a dubious course of action). **2** to low (of cattle). - vn *naɛr, naɛiir*; ava *naaɛir*.

نعرة *naɛra* /n pl *-aat*/ **1** /inst n/ a shout, a bellow, a roar. **2** conceit.

نعّر *naɛɛar* /vi/ **1** to shout and bellow repeatedly. **2** to low repeatedly (of cattle). - vn *tanɛiir*; ava *minaɛɛar*.

ن ع س

نعس *niɛis, naɛas (a, i)* /vi/ **1** to drowse. **2** *[rur]* to sleep. - vn *naɛasaan*; ava *naɛsaan*.

نعسان *naɛsaan* /adj */ drowsy, sleepy. *ɛuyuun naɛsaana* languorous eyes.

نعاس *naɛaas* /n/ *[rur]* sleep, sleepiness. *ʕin-naɛaas kaabis ɛalayya* I am sleepy.

ن ع ش [1]

نعش *naɛaʃ (i)* /vt/ to refresh, revive. *xud-lak duʃʃ[i] yinɛiʃ-ak* have a shower, it'll freshen you up. - vn *naɛaʃaan*; ava *naaɛiʃ*; pva *manɛuuʃ*.

نعشة *naɛʃa* /inst n, pl *-aat*/ a refreshing.

منعش *munɛiʃ* /adj/ refreshing.

انتعش *ʕitnaɛaʃ* /vi/ to be refreshed, be revived. - iva *mitniɛiʃ*.

انتعش *ʕintaɛaʃ* /vi/ **1** to revive, feel refreshed. **2** to become elated, become cheerful. **3** to thrive, flourish. *ʕit-tigaara ntaɛaʃit* trade flourished. - ava *mintiɛiʃ*.

ن ع ش [2]

نعش *naɛʃ* /n pl *nuɛuuʃ, nuɛúʃa*/ **1** *[Isl]* bier. **2** *[Chr]* coffin.

ن ع ق

نعق *naɛɛaq* /vi/ **1** to caw (of a crow). **2** to hoot (of an owl). - vn *niɛiiq, tanɛiiq*; ava *minaɛɛaq*.

ن ع ك ش

نعكش *naɛkiʃ* /vt/ to put in disarray, mess up. *naɛkiʃt[i] ʃaɛr-i* I messed up my hair. *ḥiduum-u mnaɛkiʃa* his clothes are dishevelled. - vn *naɛkaʃa*; ava/pva *minaɛkiʃ*.

منعكشانى *minaɛkiʃaati* /adj pl *-yya*/ messy, disorganized (of a person).

اتنعكش *ʔitnaʕkif* /vi/ to be put into disarray, be messed up. - iva *mitnaʕkif*.

ن ع ل [1]

نعل *naʕl* /n pl *nuʕuul, niʕaal, nuʕúla*/ **1** sole (of a shoe). **2** *[rur]* pair of (peasant) shoes.

ن ع ل [2]

نعل *naʕal (a)* /vt/ to curse. *ʔallaah yinʕal ʔabuu-k* God curse your father! - also *laʕan*. - vn *naʕl*; ava *naaʕil*; pva *manʕuul*.

اتنعل *ʔitnaʕal* /vi/ to be cursed. - iva *mitniʕil*.

انتعل *ʔintaʕal* = *ʔitnaʕal*. - iva *mintiʕil*.

ن ع م

نعم *niʕim (a)* /vi/ **1** to become smooth, become level and even. *xad daqn-u wiffeen li-ḥadd' ma niʕmit* he gave his chin a double shave, till it was smooth. **2** to become fine or soft, reach a fine or soft consistency. *harast il-ʕads' l-ṿaayit ma niʕim* I mashed the lentils to a purée. ‖*kalaam-u niʕim qawi baʕd' ma xad il-ʕalqa* he's become sweet-tongued after the beating he received. - vn *nuʕuuma, nuʕumiyya*; ava *naaʕim*.

نعم *naʕam [1] (i): naʕam ʕala* to be gracious to, bless (s.o. with s.th.), endow (s.o. with s.th.). *rabb-i-na naʕam ʕalee bil-ʕaql* Our Lord endowed him with wisdom. *ʔinʕimi ʕaleena b-naẓra* grace us with a glance! (when trying to elicit a response from a pretty girl on the street). ‖*naʕam alla ʕaleek* response to *naʕam [2]* and *naʕiiman*. - *ʔallaah yinʕim ʕaleek* response to *naʕiiman*. - vn *naʕamaan*; ava *naaʕim*.

نعوميّة *nuʕumiyya* /n/ smoothness, softness, fineness.

ناعم *naaʕim* /adj */ **1** smooth. *ʔil-qalawooẓ yikkisir wil-musmaar yibqa naaʕim* the thread breaks and the screw is left smooth. ‖*raagil naaʕim* (1) an unctuous man. (2) a spineless or wishy-washy man. - *garr' naaʕim maʕa* and *saḥab naaʕim li-* to sweet-talk, humour with unctuous words, as in *lamma faxaṭt' fii ʔibtada ygurr' naaʕim maʕaaya* when I snapped at him, he started laying on the charm with me. **2a** of fine consistency. *diqiiq naaʕim* fine flour. **2b** soft. *farʃa naʕma* soft bedding. **3** rich with clarified butter (of certain types of biscuit such as *kaḥk* and *ṿurayyiba*).

أنعم *ʔanʕam'* /el/ smoother/smoothest etc.

نعم *niʕm* (the literary variant *niʕma* occurs in elevated speech) /n in constr state/ the best of. *da niʕm il-ʔaxlaaq* he has the best of manners. *ya rabb' ʔinnaka niʕma l-muʕiin* O Lord, Thou art the best of helpers!

¶ *wa-niʕm* or *wa-niʕm' bi-* extremely polite response to the mentioning of a name. *ʔana ḥasan ibn' mḥammad. - wa-niʕm* (or *wa-niʕm' bii*) 'I'm Hasan the son of Muhammad.' 'Praise be (to your illustrious father)!' *ʔana min if-ʃarqiyya - wa-niʕm* (or *wa-niʕm' biiha* or *wa-niʕm' bir-riggaala*) 'I'm from Sharqiya.' 'Praise be (to your illustrious home and its folk)!' - *wa-niʕm' bii* or *wa-niʕm' bi-llaah* (1) response to the mentioning of the name of God. *juft' lutf' rabb-i-na. - wa-niʕm' bii* 'See the kindness of Our Lord!' 'Praise he unto Him!' (2) response to *tiʔamnu bi-llaah* etc. ≈ I accept the sincerity of what you say.

نعمة *niʕma* /n pl *niʕam, naʕaayim*/ **1** God's grace, God's bounty. *niʕmit il-ʕimaad* the grace of baptism. *niʕam rabb-i-na ktiira* how bountiful is our Lord! ‖*wi-ḥyaat di n-niʕma* or *win-niʕma* a conventional oath sworn on food, especially bread. **2** comfort, ease of life. *ma-b-yirʕaa-ʃ in-niʕma lli huwwa fiiha* he's doing nothing to safeguard his present comfortable way of life. *baayin ʔinnak miʃ wiff' niʕma* it seems you're not made for a life of ease (said to one who refuses a course of action regarded by the speaker as profitable).

نعم *naʕam [2]* response particle **1** indicating attention ≈ yes? what can I do for you? ‖*ya naʕam* or *naʕameen* familiar or affectionate forms of *naʕam*. **2** requesting the repetition of something not properly heard ≈ excuse me? I beg your pardon? **3** voicing objection to something said ≈ what (the hell) are you saying!

¶ *ʔay naʕam* true, that is so (in open-ended acknowledgement of the correctness of a statement). *ʔay naʕam ḍarabt-u (laakin huwwa yistaahil)* true, I hit him (but that's only what he deserves).

نعام *naʕaam* /coll n/ ostrich(es).

نعامة *naʕaama* /unit n, pl *-aat*/ an ostrich.

نعيم *naʕiim* /n/ great comfort, luxury. *ʕaayif fi-naʕiim* living in heaven-on-earth. *gannaat in-naʕiim* paradise.

¶ *naʕiiman* /interj/ may you feel comfortable! (said as a compliment to one who has just taken a bath or had a haircut).

نواعم *nawaaʕim* /pl n/ **1** soft and refined types of food. **2** precious, delicate and pampered women. *sitt' min in-nawaaʕim* a pampered woman.

نواعمي *nawaʕmi* /adj invar/ **1** soft, easy, luxurious. *ʕiiʃa nawaʕmi* an easy life. **2** smooth, unctuous. *kalaam nawaʕmi* smooth talk. ‖*baṣṣa nawaʕmi* a beguiling look.

مناعم *manaaʕim* /pl n/ protected (and hence soft) areas of the human body (e.g., the arm-pit, between fingers and toes). *ʔig-garab yiẓhar il-ʔawwil fil-manaaʕim* mange occurs first in the soft creases of the body.

اتنعم ʕitnaʕam: ʕitnaʕam ʕala /vi/ (impersonal) passive of *naʕam ʕala*. *ʕitnaʕam ʕalee bil-ʕilmⁱ wil-ʕadab* he's been graced with both learning and good manners. - iva *mitniʕim*.

نعّم *naʕʕam* /vt/ **1** to make smooth, give a smooth finish to. *baʕdⁱ ma ysawwii bil-qaduum bi-yiigi ynaʕʕam-u biʃ-ʃaḫḫuuṭa* after he has evened it with the adze, he sets about smoothing it off with the broad chisel. *gaab ʃaraab ʕamal minnu ṭaqiyya ʕaʃaan yinaʕʕam ʃaʕr-u* he got a stocking and made a cap from it, to make his hair smooth. ‖*naʕʕam il-ʃarqᵃ ʕala-* to make numerous journeys for the sake of (s.o.), as in *naʕʕamtᵃ ʕalee l-ʃarqⁱ ma-rqii-ʃ yiigi mʕaaya* (although) I went several times to fetch him he wouldn't come with me! **2** to make fine or soft, bring to a fine or soft consistency. *ʃid-duxxaan da bi-yduqquu wi-ynaʕʕamuu wi-yunxuluu* this tobacco they pound, grind fine, and sieve. - vn *tanʕiim*; ava/pva *minaʕʕam*.

اتنعّم ʕitnaʕʕam /vi/ **1** to be smoothed. **2** to be brought to a fine or soft consistency. **3** to live luxuriously, live a life of ease. - ava/iva *mitnaʕʕam*.

أنعم ʔanʕam²↑: ʕanʕam ʕala /vi/ to be gracious to, bless (s.o. with s.th.), endow (s.o. with s.th.). *rabb-i-na ʕanʕam ʕalayya bin-nagaaḥ* God granted me success. - vn *ʕinʕaam*; ava *minʕim*.

استنعم ʕistanʕam /vt/ **1** to consider (too) soft, smooth or fine. **2** to select for softness, smoothness or fineness. — /vi/ **3** to act or behave in a spineless or delicate manner. *ʕinta ḫa-tistanʕam ma tistargil baqa w-tiftaʁal zayy in-naas* are you going to start whining, why don't you be a man and work properly? - vn *ʕistinʕaam*; ava *mistanʕam*.

ن ع ن ش

نعنس *naʕniʃ* **1** /vt/ to refresh, invigorate. **2** /vi/ to become cheerful, become light-hearted. *ʕil-waaḫid laazim yifarfiʃ wi-ynaʕniʃ - huwwa ḫaddⁱ waaxid minha ḫaaga* one has to have a good time and enjoy oneself - after all, you can't take it with you! - vn *naʕnaʃa*; ava *minaʕniʃ*.

اتنعنش ʕitnaʕniʃ /vi/ **1** to be refreshed, be invigorated. **2** to become cheerful, become light-hearted. - vn *tinaʕniiʃ*; ava/iva *mitnaʕniʃ*.

ن ع ن ع

نعنع *naʕnaʕ* /vi/ to become fresh, invigorated or healthy. *ʕiz-zarʕⁱ lamma ʃirib mayya naʕnaʕ* the plants looked healthy and fresh after being watered. - vn *naʕnaʕa*; ava *minaʕnaʕ*.

منعنع *minaʕnaʕ* /adj/ **1** minty. *ṭaʕm-a-ha mnaʕnaʕ* it tastes minty. **2** fresh, healthy. *ya mnaʕnaʕa ya ḫilba [vendor's cry]* fenugreek fresh as mint!

نعناع *niʕnaaʕ* /n/ mint. *sagaayir bi-niʕnaaʕ* mentholated cigarettes.

ن ع و س

نعوس *naʕwis* **1** /vt/ to cause to feel sleepy or drowsy. **2** /vi/ to feel sleepy, feel like sleeping. - vn *naʕwasa*; ava/pva *minaʕwis*.

اتنعوس ʕitnaʕwis /vi/ to be made drowsy or sleepy. - vn *tinaʕwiis*; iva *mitnaʕwis*.

ن ع ى

نعى *naʕaʔ↑ (i)* /vt/ to announce the death of. - vn *naʕy*; ava *naaʕi*; pva *manʕi*.

¶ *naʕa ʕalaʔ↑* to blame, criticize, as in *naʕu ʕaleeha ʕinnaha ma-gat-fⁱ maʕa ʕixwat-ha tzur-hum* they criticized her for not coming with her brothers to visit them.

نعى *naʕy* /n/ obituary notice.

اتنعى ʕitnaʕa /vi/ passive of *naʕa*. - iva *mitniʕi*.

ن غ ز

نغز *naɣaz (u)* /vt/ **1** to cause a pricking or sharp shooting pain. *taḫtⁱ bizz-i b-yunɣuz-ni* the place beneath my breast gives me pricking pains. **2** to prick, prod. ‖*dayman yiḫibbⁱ yinɣuz* he always enjoys getting in digs (at people), he's always insinuating (things). - vn *naɣz, naɣaʒaan*; ava *naaɣiz*; pva *manɣuuz*.

نغزة *naɣʒa* /inst n, pl *-aat*/ **1** twinge of pain. **2** a prod, a prick.

نغزة *nuɣʒa* /n pl *-aat, nuɣaz*/ small hole, cavity, cleft. *lu nuɣʒa f-daqn-u* he has a cleft in his chin. ‖*qaʕdiin bi-yḫaffifu f-nuɣʒa middariyya* they're sitting smoking hashish in a hidden corner.

نغّز *naɣɣaz, naɣɣiz* /vt/ to poke, prod or prick repeatedly. *kaan bi-ynaɣɣaz il-ḫumaar bi-ʕaṣaaya txiina w-xifna* he was prodding the donkey with a thick rough stick. - vn *tanɣiiz*; ava/pva *minaɣɣaz*.

تنغيزة *tanɣiiza* /inst n, pl *-aat, tanaɣiiz*/ **1** a severe twinge of pain. **2** a prod, a poke.

اتنغّز ʕitnaɣɣaz /vi/ to be poked, prodded or pricked repeatedly. - iva *mitnaɣɣaz*.

ن غ ش

ناغش *naaɣiʃ* /vt/ to be playful with (especially a member of the other sex). - vn *minaɣʃa*; ava *minaaɣiʃ*.

اتناغش ʕitnaaɣiʃ /vi/ to be playful (with o.a.). *qaʕdiin yitnaɣʃu fil-ʃutubiis ʕeen-i ʕeen-ak* they're carrying on in the bus in front of everyone. - ava *mitnaaɣiʃ*.

ن غ ش و ش
نغسوس *naɣfuuf* /n pl *naɣafiif*/ **1** gill. **2** nasal cavity. ‖*biʕiid ʕan naɣafiif-ak* not on your nelly! not on your life! - also *naxfuuf*.

ن غ ص
نغص *naɣɣaṣ* /vt/ to make unpleasant, irritating or loathsome. *rabb-i-na waʕad-u b-waḥda naɣɣaṣit ʕift-u* God gave him a wife who made his life hell. - vn *tanɣiiṣ*; ava/pva *minaɣɣaṣ*.
اتنغص *ʔitnaɣɣaṣ* /vi/ to become or be made unpleasant, irritating or loathsome. - ava/iva *mitnaɣɣaṣ*.

ن غ م
نغم *naɣam* /coll n pl *ʔanɣaam*/ musical sound. *naɣam il-ʕuud* the sound of the lute. *ma-b-aḥibb'-ʃ il-ʔanɣaam il-ʔurubbiyya* I don't like the sound of European music. ‖*qaṭaʕ in-naɣam* he shut up, he became silent.
نغمه *naɣama, naɣma* /n pl *-aat*/ **1** tune, melody type. *naɣama ḥaziina* a sad tune. *naɣamit bayaati* the *bayaati* melody type. ‖*ʔahi di n-naɣama lli ʔana xaayif minha* that's exactly the type of talk I'm afraid of. **2** note of the musical scale.
نغّم *naɣɣam* **1** /vt/ to make musical, make tuneful. *ʔil-bint' di ḥilwa f-kull[a] ḥaaga - ḥatta kalam-ha l-ʕaadi bi-tnaɣɣam-u* that girl's beautiful in every way - she even puts a lilt into her ordinary speech. **2** /vi/ to emit musical or tuneful sounds. *rooḥ bi-tiddi ṣoot waaḥid wi-tanya b-tiddi tanɣiim* one pipe is for the drone, the other for the tune. - vn *tanɣiim*; ava/pva *minaɣɣam*.
اتنغّم *ʔitnaɣɣam* /vi/ to be made tuneful. - iva *mitnaɣɣam*.

ن غ م ش
نغمش *naɣmiʃ* **1** /vt/ to touch lightly, tickle. *fii namla bi-tnaɣmiʃ rigl-i* there's an ant tickling my leg. **2** /vi/ to experience a tickling sensation. - vn *naɣmaʃa*; ava/pva *minaɣmiʃ*.
نغمسه *naɣmaʃa* /n pl *naɣamiiʃ*/ tiny scratch mark, fleck. *ʕumaaʃ ʔabyaḍ fii naɣamiʃ sooda* white material with tiny black flecks.
اتنغمش *ʔitnaɣmiʃ* /vi/ to be touched lightly, be tickled. - iva *mitnaɣmiʃ*.

ن غ ن غ
نغنغ *naɣnaɣ* /vt/ to pamper, indulge luxuriously. *ʔiza tgawwiztii-ni ḥ-anaɣnaɣ-ik* if you marry me I'll keep you in the lap of luxury. - vn *naɣnaɣa*; ava/pva *minaɣnaɣ*.
اتنغنغ *ʔitnaɣnaɣ* /vi/ to be pampered. - vn *tinaɣniiɣ*; ava *mitnaɣnaɣ*.

ن غ ى
ناغى *naaɣa* /vt/ to speak tenderly to (e.g., a child, a lover). - vn *minaɣiyya*; ava *minaaɣi*.
اتناغى *ʔitnaaɣa* /vi/ to be spoken to tenderly. - iva *mitnaaɣi*.

ن ف ت ل –
نفتالين *naftaliin* <Fr> /n/ naphthalene. *naftaliin bily* moth-balls.

ن ف ث see [2] ن ف س

ن ف ح
نفحة *nafḥa* /n pl *-aat, nafaḥaat*/ gift (particularly from God).

[1] ن ف خ
نفخ *nafax (u)* /vt/ **1** to blow on. ‖*tunfux-u yʈiir* (1) it's as light as a feather. (2) he's a mere weakling, he couldn't put up a fight. **2** to blow up, inflate. *ʔunfux il-ʕagala* pump up the tyre! *ʔil-bikarbunaat bi-yunfux il-ʕagiin* the baking-powder makes the dough rise. ‖*ʔalaat nafx [mus]* wind instruments. - *ʕamaliyyit nafx [surg]* insufflation operation. - *xulxaal nafx* hollow anklets. – /vi/ **3** to blow. *ʔunfux ʕala ṣawabʕ-ak tidaffii-ha* blow on your fingers and warm them! ‖*rabb-i-na nafax fi-ṣurt-u [deris]* ≈ he, contrary to his usual performance, did well this time, as in *rabb-i-na yinfux fi-ṣurt-ak wi-tgiib ʕeef maʕaak* I hope you will manage to bring some bread with you this time! **4** to huff and puff (with anger), fume. *bi-yuqʕud yunfux wi-huwwa ṭahqaan* he fumes away when he is fed up. **5** to swell. - vn *nafx, nafaxaan, nifiix*; ava *naafix*; pva *manfuux*.
نفخه *nafxa* **1** /inst n, pl *-aat*/ an exhalation. **2** /n/ pomposity, conceit. *nafxa kaddaaba* or *nafxa ʕal-faaḍi* false pride, empty conceit.
منفوخ *manfuux* /adj */ pompous, conceited.
نفّيخة *nuffeexa* /n pl *-aat, nafafiix*/ balloon.
منفاخ *munfaax, minfaax* /n pl *manafiix*/ pump, bellows, squeeze-bulb. ‖*kamira munfaax* folding camera, camera with bellows.
اتنفخ *ʔitnafax* /vi/ **1** to be blown on. **2** to be blown up, be inflated. **3** to become swollen, become distended. ‖*baṭn-ı tnafaxıt* (1) my stomach became swollen. (2) I felt fed up to the teeth. - *beḍaan-ı tnafaxit [coarse]* I felt fed up to the balls. - ava/iva *mıtnifix*.
نفّخ *naffax* **1** /vt/ to pump up, inflate (several times or to a great extent). ‖*ʔeeh illı naffax ʕenee-k kıda* what made your eyes so swollen? **2** /vi/ to swell up. *ʕenay-ya mnaffaxa* my eyes are swollen. - vn *tanfıx*; ava/pva *minaffax*.

اتنفّخ *ʔitnaffax* /vi/ to be blown up, be inflated (several times or to a great extent). - iva *mitnaffax*.
انتفخ *ʔintafax*↑ = *ʔitnafax*. - vn *ʔintifaax*; ava *mintifix*.

ن ف خ [2]

نافوخ *nafuux* /n/ crown of the head, (loosely also) head. *bi-tfil-ha ɛala nafux-ha* she carries it on top of her head. *hiyya ɛamlaa-li hawsa f-nafuux-i l-daragit ʔinni miʃ qaadir ʔafakkar* she's put my head in such a spin I can't think. *ʔinta ḥa-tṭayyar nafuux-i* you'll drive me out of my mind! *ʔinta ḥaaṭiṭ il-ɛeeb kull-u ɛala nafuux-i leeh* why are you putting the blame on my head? ‖*(ʔiddeet-u maqlab) ṭiliɛ min nafuux-u* (I played a trick on him) such as he's not likely to forget.

ن ف د [1]

نفد *nafad*[1], *nifid*[1] *(a)*↑ /vi/ to cease to be available. *ʔiṭ-ṭabɛa l-qadiima nifdit* the old edition isn't available any more. - vn *nafadaan*; ava *naafid*.
استنفد *ʔistanfid, ʔistanfad* /vt/ to use up, exhaust. *ʔil-muwaẓẓaf da stanfid kull*[i] *ʔagaẓaat-u* this employee has used up all his holidays. *ʔil-ɛaya huwwa lli stanfid quwwit-u* it's the sickness that has exhausted his strength. - vn *ʔistinfaad*; ava/pva *mistanfid*.

[2] ن ف د see ن ف ز : *nifid*[2], *nafad*[2], *nafid, ʔitnaffid*[2]

ن ف ذ see ن ف ز

ن ف ر [1]

نفر *nafar*[1] *(u)* /vi/ **1a** to shy, baulk (of, e.g., a horse). **1b** to recoil in disgust. *min saaɛit ma ggawwizit-u w-hiyya nafra minnu* from the moment she married him she has not been able to bring herself to go near him. **2** to snort and thus expel mucus from the nostrils (of, e.g., a donkey). - vn *nafr*; ava *naafir, nafraan*.
نفرة *nafra* /pl *-aat*/ instance noun of *nafr*. ‖*nafrit ḥumaar* callus (on the hand, supposedly caused by the mucus of a donkey or the like falling on the affected part).
نفير *nifiir* /n pl *-aat*/ **1** bugle. **2** horn, hooter (of the squeeze-bulb type). **3** megaphone.
نفّر *naffar* /vt/ to cause to recoil in disgust or annoyance. *ʔinta mnaffar-ni min ɛiʃt-i* you've made my life not worth living. *muɛamlit-u naffarit in-naas minnu* his behaviour has made people sick of him. - vn *tanfiir*; ava/pva *minaffar*.
اتنفّر *ʔitnaffar* /vi/ passive of *naffar*. - iva *mitnaffar*.
نافر *naafir*↑ /vt and vi/ to squabble (with s.o.). - vn *minafra*; ava *minaafir*.
منافرة *munafra* /n pl *-aat*/ squabble, argument.
اتنافر *ʔitnaafir* /vi/ **1** to be argued with heatedly. **2** to draw away (from s.o. or o.a.), fall into disharmony. - vn *tanaafur*; ava *mitnaafir*.
تنافر *tanaafur, tanaafur* /n/ dislike, repugnance.

(ن ف ر) [2]

نفر *nafar*[2] /n pl *ʔanfaar*/ **1** person, individual. *faay li-miit nafar* tea for a hundred people. *kursi nafareen* a two-person seat, a double seat. ‖*taksi bin-nafar* a taxi in which each passenger pays a (fixed) fare. **2** hired agricultural or construction labourer. **3** *[mil]* private soldier.
نفير *nafiir: la (luh) fil-ɛiir wala fin-nafiir* see *ɛiir*.

[3] ن ف ر see ن ف و ر : *nafuura*

ن ف ر ي ت

نفريت *nafriit: ɛafriit nafriit* see *ɛafriit*.

ن ف ز

نفذ، نفذ *nifid*[2], *nafad*[2] *(i)* /vi/ **1** to pass through. *bi-tinfid mil-ḥeeṭ li-barra* it passes through the wall to the outside. **2** to escape. *ʔiḥtart izzaay raaḥ ʔanfid min ʔiid-u* I was at a loss as to how I was going to get out of his clutches. *ʔin nafadt*[i] *min il-mayya miʃ ḥa-tinfid min if-furba [prov]* (if you escape the water, you won't escape the soup) ≈ however many dangers you survive, there will be more waiting for you. *nafad bi-gild-u* he escaped with his skin. **3** to become passable. *ʔis-sikka nifdit* the road has been cleared. - vn *nafadaan*; ava *naafid*.
نفوذ *nifuuz, nufuuz* /n/ influence. *naas luhum* (or *ʔaṣḥaab) nifuuz* people of influence.
منفذ *manfaz* /n pl *manaafiz*/ outlet or inlet, entrance or exit.
نفّذ *naffiz* /vt/ **1** to carry out, execute. *ʔana b-anaffiz il-ʔawaamir* I am carrying out orders. *ʔil-muttaham naffiz il-ḥukm* the accused served the sentence. **2** to implement in accordance with a plan. *lamma niigi nnaffiz mabna ...* when we're going to put up a building .... *tanfiiz ig-gurnaal* the production of the newspaper. - vn *tanfiiz*; ava/pva *minaffiz*.
تنفيذى *tanfiizi* /adj */ executive. *lagna tanfiziyya* executive committee.
منفّذ *munaffiz* /n */ *[theat, cin]* set builder.
نفّد *naffid* /vt/ **1** to make a hole through, pierce. *ʔik-kahrabaaʔi naffid il-ḥeeṭa min il-maṭbax liṣ-ṣaala*

the electrician made a hole in the wall from the kitchen to the living room. **2** to cause to escape. *ma-fii-ʃ ħadᵃ ħa-yiqdar yinaffid-ak minni* no one will be able to get you out of my grasp. **3** to bring (s.th.) through from one side of a partition to the other. *takyiif il-hawa laazim tinaffiduu ɛal-ʕooqa di kamaan* you must bring the air conditioning through to this room too. **4** to (be large enough to) allow (s.o. or s.th.) to pass through. *ʕiʃ-ʃibbaak da ma-ynaffid-ak-ʃ* that window is too narrow for you to get through. ‖ *ʕil-baab yinaffid gamal* (the door is wide enough to let (even) a camel pass through) ≈ kindly get out of here! — /vi/ **5** to lead through, pass through. *ʕil-ħaara bi-tnaffid ɛala ʃaariɛ kibiir* the lane leads through to a large street. -vn *tanfiid*; ava/pva *minaffid*.

اتنفّذ *ʕitnaffiz* /vi/ to be carried out, be executed. *ʕawamr-i ma-tnaffizit-ʃ* my orders were not carried out. -iva *mitnaffiz*.

اتنفّد *ʕitnaffid* /vi/ passive of *naffid*. -iva *mitnaffid*.

ن ف س ¹

نفس *nafas¹ (i)* /vt/ to jinx, put the evil eye on. *baṣṣᵃ ɛal-ʕakl¹ nafas-u* he looked at the food and gave it the evil eye. -vn *nafasaan*; ava *naafis*; pva *manfuus*.

نفس *nafs* /fem n/ **1** /pl *nufuus*/ **1a** self, psyche, mind. *ħubb in-nafs* self-love. *nafs-u ħayya* he's a sensitive person. *kaanit nufuus in-naas mirtaaħa* people used to be relaxed. *ɛilm in-nafs* psychology. **1b** soul. *xalaaṣ in-nufuus* the salvation of souls. **2** /in constr w def n/ the same .... *nafs ir-raagil* the same man. *fi-nafs il-waqt* at the same time. **3** /in constr w pron suff/ pronominal of reflexivity. *ħuṭṭ¹ nafs-ak maṭraħ-i* put yourself in my place. *laazim nuṣbur ɛala nafs-i-na* we must contain ourselves in patience. *ɛala r-raṣiif ʕaw ɛala ʃ-ʃaariɛ nafs-u* on the pavement or on the street itself. ‖ *bi-nafs-*my-, him-, it- etc. self, as in *huwwa da b-nafs-u lli ɛandi* that's (like) the very one I have, *ʕana ɛaayiz il-mudiir yiigi hina b-nafs-u* I want the director to come here personally. *-ga ɛala nafs(-u)* to compromise, sacrifice something of one's own interest, as in *laazim il-waaħid yistaħmil wi-yiigi ɛala nafs-u ʃwayya* one has to put up with things and be a little forbearing.

نفسى *nafsi* /adj/ psychological. *ɢalaq nafsi* mental perturbation. *ħaala nafsiyya* psychological state. ‖ *ʕiṭ-ṭibb in-nafsi* psychiatry.

¶ *nafsiyyan* /adv/ psychologically, mentally.

نفسيّة *nafsiyya* /n pl *-aat*/ psychological state, state of mind. *nafsiyyit-i taɛbaana* I feel low. *nafsiyyit-u kull-a-ha ɣill* he is full of grudges. *bi-yʕassar ɛala nafsiyyit iʃ-ʃaɛb* it affects the people's morale.

نفسانى *nafsaani = nafsi*.

نفس *nifs* /fem n/ **1** appetite, desire. *bi-txalli l-waaħid ma-luu-ʃ nifs¹ liʃ-ʃuɣl* it spoils one's enthusiasm for work. *waqqabt il-baṭaaṭis wi-xallet-ha tiftaħ in-nifs* I prepared the potatoes and made them appetizing. *ʕin-nifs¹ miʃ ṭalba ʕakl¹ min sana* I haven't felt like eating for a year. *bi-yiʃtaɣal bi-nifs* he works with enthusiasm. *nifs-i masduuda* I have no appetite, I have no desire, as in *nifs-i masduuda ɛal-muzakra* I don't feel like studying. **2** nature, character. *nifs-u ħilwa* (or *xaqra*) (1) he's gentle and unassuming. (2) he's undiscriminating (particularly with regard to food or women). **3** /in constr w pron suff/ modal of desire or inclination. *ʕana nifs-i f-ɛarabiyya* I wish I had a car! *ʕana nifs-i ʕaɛraf bass* all I want is to know. *nifs-u yitɛayyin fiʃ-ʃirka* he wants to be given a post in the company. **4** envy, the evil eye. *di nifs¹ gat-lak* someone must have put the evil eye on you.

نفس *nafas²* /n pl *ʕanfaas*/ **1** breath. ‖ *nafas fi-qafaṣ* (a breath in a palm crate) ≈ extremely weak, barely alive. *-lissa fii ʕin-nafas* the breath of life is still in him, he's still alive. *ʕidda nafas li-* to pump air into, as in *kull¹ ma tiddi l-babuur nafas yiɛla* the more air you pump into the stove the higher it burns. **2** puff, drag (e.g., on a cigarette). — /no pl/ **3a** strength, energy. *ma-fiyyaa-ʃ nafas ʕaɛmil ʕaktar min kida* I don't have the strength to do any more. *ɛandu sabɛiin sana w-lissa fii nafas yaaxud duff¹ baarid iṣ-ṣubħ* he's seventy years old and is still strong enough to take a cold shower in the morning. **3b** support, backing. *ʕil-baraka f-siyadt-ak wi-nafas siyadt-ak* all the credit is due to you and your efforts (on our behalf), Sir! *ɛawziin nafas-ak maɛaana ɛafaan il-masʕala timʃi* we need your good offices to make the thing work. **4** personal touch (in cooking). *nafas-ha kwayyis fiṭ-ṭabiix* she's a good cook with an original touch.

نفسة *nafasa* /n/ **1** puerperium, after-birth condition in which women bleed. -/adjectivally/ *ʕis-sitt¹ lissa nafasa* the lady's still in puerperium. **2** *[Isl]* state of ritual impurity of women after childbirth.

نفاس *nifaas* /n/ parturition, childbirth.

نفيس *nafiis* /adj */ precious.

أنفس *ʕanfas* /el/ more/most precious.

اتنفس *ʕitnafas* /vi/ to be struck by the evil eye. -iva *mitnifis*.

نفّس *naffis* /vt/ **1** to cause (s.th. inflated) to leak. *ya ʕax-i naffist il-ɛagala* hey mate! you've deflated the tyre! **2** to give (a new mother) proper food and atten-

tion. — /vi/ **3** to leak out (of air, gas etc.). *ʕil-hawa bi-ynaffis mil-bistim* the air is leaking from the piston. **4** to have a leak, be holed or punctured. *balfʲ mnaffis* a leaky valve. *ʕil-ɛilba mnaffisa* the can is punctured. - vn *tanfiis*; ava/pva *minaffis*.

¶ *naffis ɛanˆ* to find an outlet for, give vent to (feelings, desires etc.).

اتنفّس *ʕitnaffis* /vi/ **1** to breathe. **2** to utter a word, breathe a word. *min waraa tirʕi w-quddaamu ma-tiqdar-fʲ titnaffis* she chatters behind his back but in front of him she doesn't dare say a thing. **3** passive of *naffis* 1 and 2. - ava/iva *mitnaffis*.

تنفّس *tanaffusˆ* /n/ breathing, respiration. *tanaffus ṣinaaɛi* artificial respiration.

تنفّسي *tanaffusiˆ* /adj/ respiratory. *ʕig-gihaaz it-tanaffusi* the respiratory system (of the body).

نافس *naafis* /vt/ to compete with. - vn *munafsa*; ava *minaafis*.

اتنافس *ʕitnaafis* /vi/ to compete with one another. - ava *mitnaafis*.

تنافس *tanaafusˆ* /n/ competition.

ن ف س ²

نفّاث *naffaas* /adj/ jet-propelled. *muḥarrik naffaas* a jet engine.

نفّاسه *naffaasa* /n pl *-aat*/ jet plane.

ن ف ش

نفش *nafaʃ (i)* **1** /vi/ to swell, become puffed up. *ʕir-ruzzʲ b-yinfiʃ fil-mayya* the rice swells in the water. *ʕafandi laabis ɋiyaafa w-manfuuʃ* a gentleman fashionably dressed and puffed up (with conceit). **2** /vt/ to ruffle, tease (feathers, hair). - vn *naff, nafaʃaan*; ava *naafiʃ*; pva *manfuuʃ*.

نفش *naff* for the phrase *ɛaffʲ naff* see *ɛaff*.

نفسة *naffa* /pl *-aat*/ instance noun of *naff*.

اتنفش *ʕitnafaʃ* /vi/ to be or become ruffled, be teased (of feathers, hair). - ava/iva *mitnifiʃ*.

نفّش *naffiʃ* /vt/ to tease out, fluff out. - vn *tanfiiʃ*; ava/pva *minaffiʃ*.

اتنفّش *ʕitnaffiʃ* /vi/ to be teased out, be or become fluffed out. - ava/iva *mitnaffiʃ*.

ن ف ض

نفض *nafaḍ (u)* /vt/ to shake out, clean by shaking. *ʕunfuḍi s-sagagiid* shake out the carpets! ‖*nafaḍ ʕiid-u min il-ḥikaaya kull-a-ha* he washed his hands of the whole business. - vn *nafḍ, nafaḍaan*; ava *naafiḍ*; pva *manfuuḍ*.

نفضة *nafḍa* /pl *-aat*/ instance noun of *nafḍ*.

منفضة *manfaḍa* /n pl *manaafiḍ*/ **1** any of a range of implements for dusting (as a dusting cloth, a feather duster, a carpet-beater). **2** ashtray.

اتنفض *ʕitnafaḍ* /vi/ to be shaken or shake oneself. *ʕis-siggaad kull-u tnafaḍ* all the carpets have been shaken out. *b-atnifiḍ mil-bard* I'm shivering with cold. - ava/iva *mitnifiḍ*.

نفّض *naffaḍ* /vt/ **1** to beat the dust from. *naffaḍt is-siriir* I shook out the bed linen. *naffaḍ il-badla* brush down the suit! *naffaḍ-li g-gazma* dust off my shoes! **2** to remake (a mattress, pillow or the like, by removing the cotton stuffing, cleaning it and fluffing it). **3** to make penniless. *ʕana mnaffaḍ* I am flat broke. - vn *tanfiiḍ*; ava/pva *minaffaḍ*.

اتنفّض *ʕitnaffaḍ* /vi/ **1** to be cleaned of dust. **2** to be remade (of a mattress, pillow or the like). **3** to be made penniless. - iva *mitnaffaḍ*.

انتفض *ʕintafaḍ* /vi/ **1** to shake, shudder. **2** to jump, start. - vn *ʕintifaaḍ*; ava *mintifiḍ*.

انتفاضة *ʕintifaaḍa* /pl *-aat*/ instance noun of *ʕintifaaḍ*. *ʕintifaaḍit moot* death-throe. *ʕintifaaḍit ig-geef* army revolt.

ن ف ط

نفط *nafṭ* /n/ petroleum.

ن ف ع

نفع *nafaɛ (a)* **1** /vt/ to be of use to. *ʕij-jakitta di tinfaɛ-ak* would this jacket be of any use to you? **2** /vi/ to be of use, be effective. *xadtʲ ɛlaag laakin ma-nafaɛ-ʃ* I underwent treatment but it did no good. *ʕik-kalaam da ma-yinfaɛ-ʃ* that's no good, that won't do. *nafaɛ-u ʕeeh* what use is it? what's it good for? ‖*la kida naafiɛ wala kida naafiɛ* there's no possible solution. - vn *nafɛ, nafaɛ, nafaɛaan*; ava *naafiɛ*.

نفعي *nafɛi* /adj */ selfish, opportunist, self-serving.

نفعة *nafaɛa = manfaɛa. ma-fii-ʃ minnu nafaɛa* no good is to be had out of him.

أنفع *ʔanfaɛ* /el/ more/most useful or effective.

منفعة *manfaɛa* /n pl *manaafiɛ*/ interest, advantage. *ma-fii-ʃ minnu manfaɛa* there's nothing to be got out of it. *ma-lii-ʃ manfaɛa fil-mawḍuuɛ* I've no personal interest in the matter.

منفعجي *manfaɛgi* /n pl *-yya*/ opportunist.

نفّع *naffaɛ* /vt/ to cause to profit, benefit (by giving one's custom to or by giving work to). *ma-bi-ynaffaɛ-ʃʲ ḥaddʲ min bayyaɛiin ḥarit-na b-ɋirf* he doesn't give custom to any of the dealers in our lane, not even a

piastre's worth. ‖*ya baxt illi naffaɛ wi-stanfaɛ [prov]* ≈ blessed is he who while making a profit profits others. -*naffaɛ-na ya beeh* your assistance, sir! (said, e.g., by beggars and petty traders). - ava/iva *mınaffaɛ*.
اتنفّع ʕitnaffaɛ /vi/ passive of *naffaɛ*. - iva *mitnaffaɛ*.
انتفع ʕintafaɛˀ = ʕıstanfaɛ. - vn ʕintifaaɛ; ava *mintifiɛ*.
استنفع ʕistanfaɛ /vi/ to profit, benefit. *b-astanfaɛ min kull' gneeh bi-talaata saay* I make a profit of three piastres on every pound. - vn ʕistinfaaɛ; ava *mistanfaɛ*.

ن ف ف
نفّ *naff (i)* /vi/ *[coarse]* to blow one's nose. - vn *naff, nafafaan*; ava *naafif*; pva *manfuuf*.
نفّة *naffa'* /n pl *-aat*/ *[coarse]* **1** instance noun of *naff*. **2** a piece of nasal mucus, snot.
اتنفّ ʕitnaff /vi/ *[coarse]* (impersonal) passive of *naff*. ʕil-mandiil da ma-yitnaff'-ʃ fii no one could blow his nose in this (dirty) handkerchief! - iva *mitnaff*.

ن ف ق ¹
نفق *nafaq' (u)* /vi/ **1** to pay maintenance (e.g., for children, a divorced wife). **2**↓ to give gifts (to one's fiancée). - vn *nafaqaan*; ava *naafiq*; pva *manfuuq*.
نفقة *nafaqa* /n pl *-aat*/ **1** maintenance, alimony. **2**↓ gift of food given to an engaged girl by her fiancé on the occasion of a festival.
اتنفق ʕitnafaq /vi/ (impersonal) passive of *nafaq'*. ʕitnafaq ɛaleeha talat siniin she was given engagement presents for three years. - iva *mitnifiq*.

ن ف ق ²
نافق *naafiq* /vt/ to act hypocritically (towards). *bi-ynaafıq il-mudiir* he's making up to the director. - vn *nıfaaq, minafqa*; ava *minaafiq*.
نفاق *nifaaq* /n/ hypocrisy.
منافق *munaafiq* /n */ hypocrite.
اتنافق ʕitnaafiq /vı/ to be treated with hypocrisy. - iva *mitnaafiq*.

ن ف ق ³
نفق *nafaq²* /n pl ʃanfaaq/ tunnel, underpass.

ن ف ل
نفل *nafl* /n/ *[Isl]* supererogatory acts of devotion.
نفلة *nifla* /n pl *-aat, nifal*/ *[rur]* an extra amount (usually of land) added at a time of partitioning to compensate for some defect. ʕiddinaa-lu nifla ɛand il-qısma ɛaʃaan xad il-ʕarḍ il-biɛiida we gave him an extra share when we divided the land because he took the farther plot.
نوافل *nawaafil* = *nafl*.
نفّل *naffil* /vt/ *[rur]* to give (s.o.) an extra amount (usually of land) at a time of partitioning to compensate for some defect in his share. - vn *tanfiil*; ava/pva *minaffil*.
اتنفّل ʕitnaffil /vi/ **1** passive of *naffil*. **2** to perform *nawaafil*. - ava/iva *mıtnaffil*.

ن ف م ب ر
نوفمبر *nufimbır* /n/ November.

ن ف ن ف
نفنف *nafnıf* /vi/ **1** to break out in blisters. **2** to subside (of a swelling). **3** to have a runny nose and be constantly blowing it or sniffing. ɛandu bard' w-qaaɛid yinafnif ṭuul in-nahaar he's got a cold and is constantly blowing his nose. - vn *nafnafa*; ava *mınafnif*.

ن ف و ر
نافورة *nafuura* /n pl *-aat*/ fountain.

ن ف ى
نفى *nafa (i)* /vt/ **1** to deny. *nafu ʕayy' ɛlaaqa liihum bil-mawḍuuɛ* they denied having any connection with the matter. ‖*ʃuhuud in-nafy [leg]* witnesses for the defence. **2** to exile. - vn *nafy*; ava *naafi*; pva *manfi*.
نفية *nafya* /pl *-aat*/ instance noun of *nafy*.
نفاية *nifaayaˀ* /n pl *-aat*/ waste matter, rubbish. *nifayaat il-maṣaaniɛ* factory wastes.
اتنفى ʕitnafa /vi/ **1** to be denied. **2** to be exiled. - iva *mitnifi*.
نفّى *naffa²* /vt/ *[agric]* **1** to weed out. *bi-ynaffu n-nigiil* they weed out the couch grass. **2** to clear (s.th.) of weeds. *naffu r-ruzz* they cleared the rice of weeds. - vn *tanfiyya*; ava/pva *minaffi*.
اتنفّى ʕitnaffa /vi/ passive of *naffa²*. - iva *mitnaffa*.
انتفى ʕintafa = ʕitnafa. - iva *mintıfi*.

ن ق ا ر
نقارة *naqaara: ʕil-filuus bi-ṭruuḥ faqaara naqaara* the money is going down the drain.

ن ق ب ¹
نقب *naqab (u)* /vt/ *[rur]* to make a hole in (a wall) by removing bricks (usually, in order to steal what is on the other side). ʕil-ḥaramiyya naqabu z-ziriiba the thieves made a hole in the wall of the pen (and stole the animals). - vn *naqb, naqabaan*; ava *naaqib*; pva *manquub*.
نقب *naqb* **1** /vn/ ‖*naqb-u ga* (or *ʃiliɛ naqb-u*) *ɛala foona (faḍya) [prov]* (he made a hole in the wall of an empty

granary) ≈ his efforts were wasted. **2** /n/ pass between hills.

نقبه *naqba* /pl *-aat*/ instance noun of *naqb*.

اتنقب *ʔitnaqab* /vi/ passive of *naqab*. - iva *mitniqib*.

نقّب *naqqab* /vi/ to prospect. *fii ʃarikaat ʔagnabiyya ktiira bi-tnaqqab ɛala l-bitrool fi-maṣr il-yomeen dool* there are many foreign companies prospecting for oil in Egypt these days. - vn *tanqiib*; ava *minaqqab*.

اتنقب *ʔitnaqqab* /vi/ (impersonal) passive of *naqqab*. *ʔil-bitrool mumkin yitnaqqab ɛalee fil-baḥr* oil can be prospected for in the sea. - iva *mitnaqqab*.

ن ق ب 2

نقابه *niqaaba, niqaaba* /n pl *-aat*/ **1** labour union, professional association. *niqaabit ɛummaal in-nasiig* the textile workers' union. *niqaabit il-mihan iṭ-ṭibbiyya* the association of the medical professions. **2** agricultural co-operative.

نقابى *niqaabi* /adj */ pertaining to a union, association, co-operative etc.

نقيب *naqiib* /n pl *nuqabaaʃ, nuqaba*/ **1** head of a professional association. *naqiib iṣ-ṣuḥafiyyiin* the head of the journalists' association. ‖*naqiib il-ʃafraaf* head of the descendants of the Prophet Muhammad. **2a** *[mil]* captain. **2b** *[nav]* lieutenant. **2c** *naqiib ṭayyaar* flight-captain.

نقيب *niqiib: ya baxt' min kaan in-niqiib xaal-u [prov]* how lucky is he whose uncle is a man of influence!

ن ق ب 3 see **ل ق ب**: *naqb*

ن ق ح

نقح *naqaḥ (a)* **1** /vi/ to throb (with pain). *gism-i b-yinqaḥ maṭraḥ il-ɛamaliyya* my body throbs where the operation was done. **2** /vt/ to deal a sharp blow to. *raaḥ naqḥ-u f-manaxiir-u* he upped and busted him in the nose. - vn *naqḥ, naqaḥaan*; ava *naaqiḥ*; pva *manquuḥ*.

نحح *naqḥ* /adj invar/ terrific, tremendous. *ʔiddet-lu ɛalqa naqḥ* I gave him a terrific thrashing. *bint' naqḥ* a smashing girl.

أنحح *ʔanqaḥ* /el/ more/most. *da naṣṣaab wi-ʃaxuu ʃanqaḥ minnu* he's a fraud and his brother is worse.

اتنحح *ʔitnaqaḥ* /vi/ to be dealt a sharp blow. - iva *mitniqiḥ*.

ن ق د 1

نقد *naqad (u)* /vt/ to hand over (cash) to (s.o.). *naqadt-u ʃugrit-u* I handed him over his wages. - vn *naqd, naqadaan*; ava *naaqid*; pva *manquud*.

نقد *naqd', naqd'* /n/ **1** money, finance. *ʔidaarit in-naqd* monetary administration. *waraqit naqd* currency note. **2** cash (as distinct from other forms of payment). *kull il-mabiɛaat bin-naqd* all sales are in cash. ‖*filuus naqd' w-ḥurra* hard honest cash. — /adv/ **3** in cash. *ʃana ʃarii-ha naqd* I've bought it for cash.

¶ *naqdan* /adv/ in cash.

نقدى *naqdi* /adv/ in cash. *dafaɛt' naqdi* I paid cash.

نقديّه *naqdiyya* /n/ **1** /pl *-aat*/ cash payment. **2** /no pl/ money, cash. *ʔiid-ak ɛan-naqdiyya* hand over the cash!

نقود *nuquud* /pl n/ money, currency. *nuquud maɛdaniyya* coins (as distinct from banknotes).

ن ق د 2

نقد *naqad (u)* /vt/ to criticize. *miʃ laazim tinqud taṣarrufaat-u ɠuddaam in-naas ɛafaan ma-tiḥriguu-ʃ* you mustn't criticize his behaviour in front of other people lest you embarrass him. - vn *naqd*; ava *naaqid*; pva *manquud*.

نقد *naqd², naqd²ʔ* /n/ criticism. *naqd' ʃadabi* literary criticism.

ناقد *naaqid* /n pl *nuqqaad*/ critic. *naaqid ʃadabi* literary critic.

انتقد *ʔintaqad, ʔintaqad* /vt/ to criticize. *miin yiqdar yintiqid kalaam-ak illi kull-u durar* who could ever criticize your words, all of which are pearls of wisdom. - vn *ʔintiqaad, ʔintiqaad*; ava *mintiqid*.

انتقاد *ʔintiqaad* /n pl *-aat*/ criticism, critical remark, disapproving remark.

منتقد *muntaqad* /adj */ deserving of criticism, shameful.

ن ق د 3

منقد *manqad* /n pl *manaaqid*/ metal or earthenware brazier (see Pl.A, 6).

ن ق ذ see **ن ق ز**

ن ق ر 1

نقر *naqar (u)* /vt/ **1a** to peck, peck at, peck up. *ʔid-diik bi-yunqur il-ḥabb' mil-ʃarḍ* the cock pecks up the grain from the ground. **1b** to make a hole in. *naqar il-ʃarḍ' b-watad* he dibbled the ground with a peg. **1c** to hammer in (thin objects in particular). *naqar il-watad fil-ʃarḍ* he drove the peg into the ground. **2** to deal (s.o.) a sharp, quick blow. *naqart-u b-ẓalaṭa* I hit him with a pebble. ‖*naqarit-u ɛeen* she put the evil eye on him. **3** *[carp]* to cut a mortise in. **4** to tap (on), rap (on),

drum (on). *naqart[a] (ɛala) l-baab* I gave a tap on the door. *bi-yḥaawil yunqur il-bilya btaaɛit zimiil-u* he tries to knock his companion's marble. *naqart[a] ɛal-maktab bi-ṣawabɛ-i* I drummed on the desk with my fingers. ‖ *ʔalaat in-naqr* percussion instruments. **5** to spot, detect. *naqart-u fiʃ-ʃaariɛ* I spotted him in the street. *naqar il-ɣalṭa* he spotted the mistake. ‖*naqart' suʔaal mi-lli gambi* I cribbed (the answer to) a question from the person next to me. — /vi/ **6** to throb. *dimaaɣ-i b-tunqur* my head is throbbing. - vn *naqr, niqiir, naqaraan*; ava *naaqir*; pva *manquur*.

نقرة *naqra* /inst n, pl *-aat*/ a peck, a dent, a tap, a knock etc. ‖*di naqra wi-di naqra* this is a different matter altogether.

ناقر *naaqir[1]* see *niqiir*.

نقرة *nuqra* /n pl *nuqar, nuqraat*/ hole, hollow, declivity. ‖*liɛbit in-nuqra* a children's game with marbles in which one player tries to dislodge his opponent's marble from a hollow in the ground by throwing his marble against it.

نقر *niqr: ḥaaṭiṭ niqr-(u) min niqr-(..)* (he's) always ready to pick on (s.o.). - also *qirn*.

نقرى *niqari, nuqari* /n * and pl *-yya*/ nagger, pesterer.

نقرتى *naqarti = niqari*.

نقرتى *nuqarti* /n pl *-yya*/ player of any drum struck with a stick.

نقير *niqiir: (ɛamliin ʒayy') naaqir wi-nqiir* always fighting, always at one another's throats.

نقارة *nuqqaara* /n pl *-aat, naqaqiir*/ *[non-Cairene]* type of metal drum played with sticks.

نقّاريّة *nuqqariyya = nuqqaara.* ‖*ʒayy' ɛaṣaɛiiṣ in-nuqqariyya* (as thin as) drum sticks (usually of a woman's legs).

منقرة *manqara* /n pl *manaaqir*/ hand hoe of the same shape as a *faas* (see Pl.D, 6) but smaller.

منقار *munqaar, minqaar* /n pl *manaqiir*/ **1** beak. **2** *[carp]* mortise chisel.

اتنقر *ʔitnaqar* /vi/ passive of *naqar*. - iva *mitniqir*.

نقّر *naqqar* /vt/ **1** to peck repeatedly at. **2** to make holes in. *ʔil-ɛitta naqqarit il-fustaan* the moths made holes in the dress. **3** *[agric]* to distribute (seed, fertilizer etc.) among a number of holes. *bi-naaxud kimaawi wi-nnaqqar-u fil-xaṭṭ* we take chemical fertilizer and distribute it along the holes (prepared) in the furrow. — /vi/ **4** to throb hard or repeatedly. **5** to tap repeatedly. **6** to nag. - vn *tanqiir*; ava/pva *minaqqar*.

اتنقّر *ʔitnaqqar* /vi/ passive of *naqqar*. - iva *mitnaqqar*.

ناقر *naaqir[2]* /vt/ to nag, pester. - vn *niqaar, minaqra, minaqra*; ava *minaaqir*.

اتناقر *ʔitnaaqir* /vi/ **1** to keep nagging each other. *ʔitnaqru ʈuul is-sikka fa-wṣilt il-beet miṣaddaɛ tamaam* they squabbled all the way so I got home with quite a headache. **2** to be nagged. - ava/pva *mitnaaqir*.

ن ق ر[2] see ن ق ا ر: *naqaara*

ن ق ر ز

نقرز *naqraz* **1** /vi/ to drum, make a drumming sound. *bi-ynaqraz ʈuul il-waqt[a] ɛaṣ-ṣiniyya ɛaʃaan yigzib iz-zabaayin* he drums all the time on the tray to attract the customers. **2** /vt/ to keep hitting (s.o.). *naqraz-u bil-ɛaṣaaya* he kept rapping him with the stick. - vn *naqraza*; ava/pva *minaqraz*.

نقرزان *naqrazaan* /n/ drum resembling a kettledrum but smaller, or a pair of such drums.

اتنقرز *ʔitnaqraz* /vi/ to be hit repeatedly. - vn *tinaqriiz*; ava *mitnaqraz*.

ن ق ر س

نقرس *naqras, nuqrus, naqrasˆ* /n/ gout.

ن ق ر ش

نقرش *naqraʃ* /vt/ **1** to make gay or colourful. **2** to ornament, decorate. *naqrafu l-beet qabl il-faraḥ* they decorated the house before the wedding. - vn *naqraʃa*; ava/pva *minaqraʃ*.

اتنقرس *ʔitnaqraʃ* /vi/ passive of *naqraʃ*. - vn *tinaqriiʃ*; ava *mitnaqraʃ*.

ن ق ز

أنقذ *ʔanqaz* /vt/ to save, rescue. *ʔirmi nafs-ak fil-baḥr' wi-nqiz-ha* throw yourself in the sea and save her! - /the literary passive also occurs/ *ʔana ʔunqizt' min il-muʃkila di fil-waqt il-munaasib* I was bailed out of that problem at the right moment. - vn *ʔinqaaz*; ava *munqiz*.

منقذ *munqiz* /n */ rescuer.

ن ق س

ناقوس *naquus* /n pl *nawaqiis*/ **1** *[Chr]* pair of cymbals played to accompany anthems in the Coptic Church. **2**ˆ bell. ‖*naaquus il-xaṭar* ≈ the writing on the wall.

ن ق ش

نقش *naqaʃ (u, i)* /vt/ **1a** to pattern, ornament. *qumaaʃ manquuʃ* patterned cloth. *kaḥk' manquuʃ* crimped *kaḥk*. **1b** to make a pattern with. *bi-yunquʃu l-ḥinna ɛala ʔidee-hum* they make patterns with the henna on

their hands. **2** *[slang]* to crib from (a book, another's examination paper etc.). - vn *naqʃ, naqaʃaan*; ava *naaqiʃ*; pva *manquuʃ*.

نقش *naqʃ* **1** /vn/ ‖ *qumaaf naqʃ* patterned cloth, figured cloth. **2** /n pl *nuquuʃ*/ pattern, ornamentation.

نقشة *naqʃa* /n pl *-aat*/ pattern.

نقّاش *naqqaaʃ* /n */ house-painter, decorator.

منقاش *munqaaʃ, minqaaʃ* /n pl *manaqiiʃ*/ pastry crimper.

اتنقش *ʔitnaqaʃ* /vi/ passive of *naqaʃ*. - iva *mitniqiʃ*.

نقّش *naqqaʃ* /vt/ to pattern (a number of things one after the other). *qaʕadu ynaqqaʃu fik-kaḫkⁱ ʃuul il-leel* they were up all night decorating the cookies. - vn *tanqiiʃ*; ava/pva *minaqqaʃ*.

اتنقّش *ʔitnaqqaʃ* /vi/ passive of *naqqaʃ*. - iva *mitnaqqaʃ*.

ناقش *naaqiʃ* /vt/ **1** to discuss. *ʔigtimaaʕ bi-nnaaqiʃ fii ʔil-maʕraka* a meeting at which we discuss the battle. **2** to hold a discussion with. *ʔil-qaadi bi-ynaaqiʃ il-muḫamiin fil-ʔasaniid il-qanuniyya* the judge is discussing the legalities of the case with the lawyers. - vn *niqaaʃ, minaqʃa, munaqʃa*; ava/pva *minaaqiʃ*.

نقاش *niqaafˀ, niqaaʃ* /n/ discussion.

مناقشة *munaqʃa, munaqʃa* /n pl *-aat*/ **1** discussion, argument. **2** quizzing, interrogation.

اتناقش *ʔitnaaqiʃ* /vi/ **1** passive of *naaqiʃ*. **2** to discuss together. - ava/iva *mitnaaqiʃ*.

ن ق ص

نقص *niqiṣ* or *nuquṣ (a)* /vt/ **1** to be lacking from. *ʔil-beet yinqaṣ-u ḫagaat kitiir* the house needs a lot of things. *ʔilli naaqiṣ il-maktab makana* what the office needs is a typewriter. **2** to lack, be in need of. *ʔil-qaʕda kaanit naqṣaa-k* you were missed at the get-together. ‖ *ʔana mif naaqiṣ* ≈ I've had it up to here! - *huwwa ʔiḫna naqṣiin-ak* ≈ we already have enough on our hands without your imposing yourself too! — /vi/ **3** to be lacking, be missing. *ʔana yinqaṣ minni xamastaaʃar gineeh* I'm fifteen pounds short. *mumkin ʔaʃḫat minnak illi yinqaṣ ʕandi min il-lawaazim* may I borrow from you the things that I don't have at home? *ʔid-dawa da naaqiṣ min is-suuq* this medicine is not available on the market. ‖ *da lli kaan naaqiṣ* ≈ that's all we needed! - *naaqiṣ ...* ≈ the last straw would be ..., all that's needed now is ..., as in *naaqiṣ tiqul-li ʔazaʏʏaṭ-ak kamaan* all I need now is for you to ask me to spoon-feed you! **4** to become less, decrease. *ʔil-mizaniyya niqṣit is-sanaa-di* the budget went down this year. ‖ *niqiṣ fi-ʕenee(-hum)* to lose standing in (their) eyes. - vn *naqṣ, nuqṣaan*; ava *naaqiṣ*.

نقص *naqaṣ (i)* /vt/ to empty some of the contents from (a container). *ʔinqiṣ il-ḫalla* empty some out of the pot! - vn *naqṣ*; ava *naaqiṣ*; pva *manquuṣ*.

نقص *naqṣ* /n/ lack, shortage, deficiency. ‖ *murakkab naqṣ* inferiority complex. - *ʔir-raqṣⁱ naqṣ [prov]* ≈ to dance is to lose dignity.

ناقص *naaqiṣ* **1** /adj */ lacking, deficient. ‖ *bi-naaqiṣ* at a loss, as in *ḫa-ybiʕ-ha l-waaḫid zimiil-u ḫatta bi-naaqiṣ* he'll sell it to a colleague albeit at a loss. **2** /n/ *[elec]* negative pole.

أنقص *ʔanqaṣ* /el/ less/least.

نقّص *naqqaṣ* /vt/ to reduce, diminish. *naqqaṣt-u talat nimar* I reduced him three points. *naqqaṣu ḫaqq-i* they cut my wages. - vn *tanqiiṣ*; ava/pva *minaqqaṣ*.

اتنقّص *ʔitnaqqaṣ* /vi/ to be reduced, be diminished, be cut. - iva *mitnaqqaṣ*.

استنقص *ʔistanqaṣ* /vt/ **1** to consider lacking, deficient, defective or inferior. *ʔistanqaṣt ik-kimmiyya* I thought the quantity was short. *lamma smiʕtⁱ .kalaam-u stanqaṣt-u wi-ʕrift innu nadl* when I heard what he'd said he fell in my estimation and I realized that he was a scoundrel. **2** to select for being lacking, deficient, defective or inferior. *ʔistanqaṣ-lak ʃiwaal ʕaʃaan tiʕraf tifiil-u* choose a sack that is not full so that you can carry it. - vn *ʔistinqaaṣ*; ava *mistanqaṣ*.

ن ق ض

نقض *naqaḍ (u)* /vt/ **1** to sort through, pick through. **2** to select, pick out. *ʔinquḍ-li kiilu quuṭa gamda lis-salaṭa* pick me a kilo of firm salad tomatoes. **3** to abrogate, nullify. *leeh il-maḫkama naqaḍit il-ḫukm* why did the court annul the verdict? *naqaḍti wuḍuww-i [Isl]* you have invalidated my ablution. - vn *naqḍ, naqaḍaan*; ava *naaqiḍ*; pva *manquuḍ*.

نقض *naqḍ* /n/ *[leg]* cassation. *maḫkamit in-naqḍ* the Court of Cassation. ‖ *ʔayyⁱ ḫukmⁱ yquul-u ma-fi-huu-ʃ naqḍⁱ ʔaw ʔibraam* no decision of his is ever challenged.

نقضة *naqḍa* **1** /pl *-aat*/ instance noun of *naqḍ*. **2** /coll n/ rejects (particularly, of vegetables, small miscellaneous consumer items etc.), left-overs. - /adjectivally/ *naas naqḍa* rabble.

أنقاض *ʔanqaaḍ, ʔanqaaḍ* /pl n/ ruins, rubble, debris. *ʔil-beet inhaar wi-fii naas taḥt il-ʔanqaaḍ* the house has collapsed and there are people under the ruins.

نقاضة *nuqaaḍa* /coll n/ rejects (particularly of vegetables, small miscellaneous consumer items etc.), surplus items.

اتنقض *ʔitnaqaḍ* /vi/ passive of *naqaḍ*. - iva *mitniqiḍ*.

ناقض *naaqiḍ, naaqiḍˀ* **1** /vt/ to contradict. *ʔinta*

bi-tnaaqiḍ nafs-ak you're contradicting yourself. **2** /vi/ to raise an objection. - vn *munaqḍa, minaqḍa*; ava *minaaqiḍ*.

اتناقض *ʔitnaaqiḍ, ʔitnaaqiḍ↑* /vi/ **1** to be contradicted. **2a** to stand in mutual contradiction. **2b** to contradict oneself. - iva *mitnaaqiḍ*.

تناقض *tanaaquḍ↑* /n pl *-aat*/ self-contradiction.

متناقض *mutanaaqiḍ↑* /adj */ self-contradictory, incompatible.

ن ق ط

نقط *naqaṭ (u)* /vt/ **1** to cause to suffer a stroke or an attack of apoplexy. **2** to mark with a dot. *noota manquuṭa [mus]* dotted note. - vn *naqṭ, naqaṭaan*; ava *naaqiṭ*; pva *manquuṭ*.

نقطة *nuqṭa* /n pl *nuqaṭ*/ **1a** a drop *nuqṭit mayya* a drop of water. *nuqaṭ bi-tittaaxid fil-buqq* (medicinal) drops to be taken orally. ‖*leelit in-nuqṭa [Copt Chr]* feast of St. Michael the Archangel, who is traditionally believed to put a drop of holy water in the Nile to make it rise (12th of the month Abib). **1b** spot, dot. **2** point (in space). *nuqṭit il-bidaaya* the starting point. **3** point (e.g., in an argument). *ʔana msallim bin-nuqṭa di* I accept that point. *di nuqṭa ɛayza munaqʃa* this is a point that needs discussion. **4** score point. *faaz bin-nuqaṭ* he won on points. **5** station, post. *nuqṭit maṭaafi* fire-station. *nuqṭit buliiṣ* rural police post. **6** motif in tent appliqué designs (see Pl.H,. 16). — /no pl/ **7a** money given as a present to, e.g., a child at birth or circumcision, or a bride or groom at a wedding. **7b** money given to a musician or dancer while performing (as largesse or in payment for complimentary toasts called by the leader of a band). **8** stroke, attack of apoplexy.

نقوطة *nuquuṭa = nuqṭa*.

نقيطة *nuqeeṭa* /n/ batter of flour and eggs with which vegetables are coated before frying.

نقّاطة *naqqaaṭa* /n/ drip-feed apparatus.

أنقط *ʔanqaṭ* /adj, fem *naqṭa*, pl *nuqṭ*/ speckled, spotted.

انتقط *ʔitnaqaṭ* /vi/ **1** to have a stroke, suffer an attack of apoplexy. **2** to be dotted. - iva *mitniqiṭ*.

نقّط *naqqaṭ* /vt/ **1** to spot, cover with spots. *ʔarḍiyya mnaqqaṭa* a spotted background. *ʔil-ḥaṣba naqqaṭit wiff-i* the measles brought my face out in spots. **2** to present with (a gift of) money (cf. *nuqṭa* 7). ‖*naqqaṭ-na b-sukaat-ak* be so good as to shut up! (e.g., to one who says something stupid). — /vi/ **3** to drip. *bi-niddii-ha sṭubba ɛaʃaan ma-tnaqqaṭ-ʃ* we caulk it with oakum so that it won't drip. ‖*buqq-ak bi-ynaqqaṭ ɛasal* your words are sweet as honey. **4** to give (presents of) money (cf. *nuqṭa* 7). - vn *tanqiṭ*; ava/pva *minaqqaṭ*.

اتنقّط *ʔitnaqqaṭ* /vi/ passive of *naqqaṭ*. - iva *mitnaqqaṭ*.

ن ق ع

نقع *naqaɛ (a)* /vt/ **1** to steep, soak. **2** to leak, allow to seep. *ʔiz-ziir naqaɛ il-mayya kull-a-ha* the water-jar leaked out all the water. — /vi/ **3** to leak, seep. *ʔin-naṭara naqaɛit mis-saqf* the rain seeped through the ceiling. - vn *naqɛ, naqaɛaan*; ava *naaqiɛ*; pva *manquuɛ*.

منقوع *manquuɛ* /n/ drink made by soaking dry ingredient(s) in water. *manquuɛ il-ɛirq' suus* liquorice drink. ‖*manquuɛ iṣ-ṣuraṃ* (or *il-baraṭiiʃ*) a horrible drink.

نقعة *naqɛa* /pl *-aat*/ instance noun of *naqɛ*. ‖*ʔabu naqɛa [abus]* bed-wetter.

انتقع *ʔitnaqaɛ* /vi/ to be steeped, be soaked. - iva *mitniqiɛ*.

مستنقع *mustanqaɛ, mustanqaɛ* /n pl *-aat, -aat*/ swamp.

ن ق ق

نقّ *naqq (u)* /vi/ **1** to nag. *miraat-i bi-tnuqq" ɛalayya kull' yoom ɛaʃaan ʔaʃtiri ɛarabiyya* my wife nags at me every day to buy a car. **2** to talk incessantly and enviously (thus causing the object of comment misfortune). *ɛaɛadu ynuqqu ɛalee l-ḥadd' ma xisir kull illi ɛandu* they went on about how well-off he was till everything he had was lost. - vn *naqq, naqaqaan*; ava *naaqiq*; pva *manquuq*.

نقّاق *naqqaaq* /n */ **1** nagger. **2** one who by his incessant envious talk brings misfortune on the object of his comment.

اتنقّ *ʔitnaqq* /vi/ (impersonal) passive of *naqq*. *m-aḥibb'-ʃ ʔaakul il-ʔakl il-mitnaqq" ɛalee* I don't like to eat food other people have had their eyes on. - iva *mitnaqq*.

ن ق ل

نقل *naqal (i)* /vt/ **1** to convey from one place to another, transport. *ʔil-ʔutubiisaat bi-tinqil it-ṭalaba lil-madaaris* the buses transport the students to school. *naqaluu-ni lil-ʔisbitalya* they transferred me to the hospital. ‖*naql' damm* blood transfusion. **2** to transfer. *laazim yiftaval fir-riif mudda qabl' ma yirdu yinqiluu maṣr* he must work for a (certain) period in a rural area before they will agree to transfer him to Cairo. **3** to copy, make a copy of. *naql' ṣafḥa min ik-kitaab bi-yfiid*

il-ʕaṭfaal fi-taḥsiin il-xaṭṭ copying a page from the book helps the children to improve their handwriting. *bi-ninqil in-nusxa l-ʕaṣliyya ɛala ʃriiṭ faaḍi* we make a copy of the original on a blank tape. — /vi/ **4** *[auto]* to change gear. *laazim tiɛraf tinqil kiwayyis qabl[i] ma tsuuq fiz-zaḥma* you have to be good at changing gear before you drive in heavy traffic. - vn *naql, naqalaan*; ava *naaqil*; pva *manquul*.

نقل *naql* /n/ **1** transportation. *naql barri* overland transportation. ‖*ɛarabiyya nuṣṣ[i] naql* pick-up truck, small open truck. **2** transfer. *lamma yiwaafiq il-mudiir ḥa-ygii-lak in-naql[a] ɛala ṭuul* when the manager gives his approval you'll get (notice of) your transfer straight away. **3** *[auto]* transmission. *naql[i] ʔutumatiiki* automatic transmission.

نقلة *naqla* /pl *-aat*/ **1** instance noun of *naql*. **2** load. *ʔin-naqla tqiila ɛalee* the load is too heavy for him. **3** gear, speed. *ɛarabiyt-i talat naqlaat mif ʔarbaɛa* my car has three speeds not four.

نفل *nuql* /coll n/ mixed nut(s).

نقالة *naqqaala* /n pl *-aat*/ stretcher (for carrying the sick).

نقّالي *naqqaali* /adj invar/ movable, portable, mobile.

نقّالية *naqqaliyya* /n pl *-aat*/ shallow basket of withies for bread (resembling a *mifanna* - see Pl.B. 9 - but smaller).

منقلة *manqala* /n pl *manaaqil*/ protractor.

اتنقل *ʔitnaqal* /vi/ **1** to be conveyed, be transported. *ʔitnaqalit min il-beet lil-mustaffa* she was taken from the house to the hospital. **2** to be transferred. *ʔil-maktab itnaqal li-skindiriyya* the office was moved to Alexandria. ‖ *ʔil-maḥkama tnaqalit* the court formally moved the site of the hearing. **3** to be copied. **4** to convey oneself, proceed. *nitniqil lin-nuqṭa l-ʔaxiira* let's move on to the last point. *ma-kanuu-ʃ bi-yitniqlu xaṭwa ʔilla baɛd[i] ma yidrisu ṭ-ṭariiq* they would not take a step till they had studied the path. **5** *[auto]* to be changed (of gears). - ava/iva *mitniqil*.

نقّل *naqqil* **1** /vt/ to transfer repeatedly. *naqqilu k-koora benhum* they passed the ball back and forth between them. *ʔaaxir if-ʃahr[i] nruuḥ minaqqiliin if-ʃatl[i] f-qaṣaari* at the end of the month we transplant the seedlings into pots. **2** /vi/ to be at the elementary stages (in learning s.th.). *lissa bi-ynaqqil fil-qiraaya* he's still very much a beginner in reading. - vn *tanqiil*; ava *minaqqil*.

اتنقّل *ʔitnaqqil* /vi/ to be transferred or transfer oneself repeatedly, be moved or move oneself from place to place. - vn *tanaqqul*; ava/iva *mitnaqqil*.

تنقّل *tanaqqul*↑, *tanaqqul*↑ /n pl *-aat*/ transfer, transference.

متنقّل *mitnaqqil, mutanaqqil*↑ /adj/ movable, portable. *ṭarabezaat mitnaqqila* movable tables, trestle tables.

انتقل *ʔintaqal* = *ʔitnaqal*. ‖ *ʔintaqal* (or *ʔintaqal*) *li-raḥmit illaah [euphem]* he passed on to (rest in) God's mercy, he died. - vn *ʔintiqaal*; ava *mintiqil*.

ن ق م

نقم *naqam (i): naqam ɛala* /vi/ to feel angry with. *naqamt[a] ɛad-dinya kull-a-ha* I felt bitter against the whole world. - vn *naqamaan*; ava *naaqim, naaqim*.

ناقم *naaqim*↑ /adj */ vengeful, spiteful, bitter. *raagil naaqim ɛad-dunya* a man who is bitter about life.

نقمة *naqma* /n pl *niqam*/ calamity, disaster. ‖*gat-ak in-niqam* ≈ go to hell! - *ʔir-raagil da naqma* the man's a plague!

انتقم *ʔintaqam* /vi/ to take revenge. *ʔintaqamt[i] l-ʃaraf-i* I avenged my honour. ‖*rabb-i-na yintiqim minnu* ≈ may our Lord punish him! - vn *ʔintiqaam*; ava *mintiqim*.

ن ق ن ق

نقنق *naqnaq* /vi/ to eat sparingly, pick or nibble at one's food. - vn *naqnaqa*; ava *minaqnaq*.

ن ق و see [1] ن ق ى : *naqaawa*

ن ق و ر

نقورة *naqwara* /n/ mockery, ridicule. ‖ *ʔakl[i] w-naqwara [prov]* eating (at someone's table) and then mocking (their kindness), biting the hand that feeds one.

انتقور *ʔitnaqwar* /vi/ to indulge in mockery or ridicule. *ʔin-naas yitnaqwaru ɛalayya wi-yquulu mɛaqqad* people ridicule me and say I have complexes. - /also (impersonal) passive constructions/ *mif ʔana lli yitnaqwar ɛalee* I am not to be ridiculed. - ava/iva *mitnaqwar*.

ن ق ى [1]

نقى *naqi, naqi* /adj/ pure, unadulterated. *sibirtu naqi* pure spirits.

نقاوة *naqaawa* **1** /adj invar/ select, choice. *manga naqaawa* hand-picked mangoes. *naas naqaawa* (a) select (group of) people. **2** /vn/ selection, choice, pick. *naqaawit ɛeen-i* ≈ specially selected (i.e. by the merchant), as in *ya ṭamaaṭim ya gawaahir ya naqaawit ɛeen-i [vendor's cry]* ≈ wonderful tomatoes, personally selected! *ɛala naqawt-ak* as you personally choose, as in *ɛayziin ya rayyis kaam mangaaya kida bass[i] ykuunu*

ʕala naqawt-ak we want a few mangoes, but we rely on you to pick out some really nice ones.

نقّى naqqa /vt/ **1** to select. *ruḥt' lil-ʕagalaati w-naqqeet ʕagala kwayyisa* I went to the bicycle man and picked out a good bike. **2a** to pick over and clean. *bi-tnaqqi r-ruzz* she picks over the rice and removes the grit etc. **2b** to pick out (impurities), remove (impurities). *bi-nnaqqi l-qaff' w-yifḍal il-ḥabb* we pick out the straw and the grain is left. **3** to purify. *ʕif-fabba tidxul fi-baʕḍ' maraaḥil tanqiyyit il-mayya* alum is used in some stages of water purification. - vn *tanqiyya*; ava/pva *minaqqi*.

منقّى minaqqi /adj/ choice. *quuṭa mnaqqiyya* choice tomatoes. ‖*gat-lu ruṣaaṣa mnaqqiyya* he was hit by a bullet with his name on it. - *muṣiiba mnaqqiya* a terrible disaster. - *gaa-li suʕaal minaqqi fil-imtiḥaan* I got a fantastic question in the exam.

اتنقّى ʕitnaqqa /vi/ **1** to be selected. **2a** to be picked over and cleaned. **2b** to be picked out (of impurities), be removed (of impurities). **3** to be purified. - iva *mitnaqqi*.

ن ق ى ²

نقى *naqa* /coll n/ **1** pip(s), pit(s), kernel(s). **2** *[carp]* knots in wood (in the jargon of carpenters engaged in *mafrafiyya* work).

نقاية *naqaaye* /unit n, pl *-aat*/ **1** a pip, a pit, a kernel. **2** *[carp]* a knot in wood (cf. *naqa*).

ن ك ت ¹

نكت *nakat¹ (u)* /vt/ **1** to insert or remove (s.th.) thus making a hole. *nakatt il-watad fir-raml* I drove the peg into the sand. *nakatt il-watad mir-raml* I pulled the peg out of the sand. **2** to deal (s.o.) a blow. - vn *nakt, nakataan*; ava *naakit*; pva *mankuut*.

نكتة *nakta¹* /pl *-aat*/ instance noun of *nakt*.

اتنكت ʕitnakat¹ /vi/ passive of *nakat¹*. - iva *mitnikit*.

نكتة *nukta* /ṅ pl *nukat*/ joke. ‖ *ʕibn' nukta* one fond of (telling and hearing) jokes.

نكتى *nukati* /adj pl *-yya*/ given to making jokes, witty.

منكات *minkaat* /n pl *manakiit, manaakit*/ fine probe.

نكّت *nakkit* /vi/ to tell jokes. *qaʕadna nnakkit wi-nidḥak lamma kunna ḥa-nsooraq min id-diḥk* we went on telling jokes and laughing till we were almost fainting from laughter. - vn *tankiit*; ava *minakkit*.

اتنكّت ʕitnakkit /vi/ (impersonal) passive of *nakkit*. *ʕitnakkit ʕalee* he was the object of jokes. - iva *mitnakkit*.

ن ك ت ²

نكت *nakat² (u)* /vt/ **1** to dishevel, make a mess of. *daxalu l-ḥaramiyya nakatu f-faqqa min fooq li-taḥt* the burglars came in and turned the flat upside down. ‖*hara w-nakat* ≈ to eat one's heart out with frustration, boil inwardly. **2** to shuffle (cards). - vn *nakt, nakataan*; ava *naakit*; pva *mankuut*.

نكتة *nakta²* /pl *-aat*/ instance noun of *nakt*.

اتنكت ʕitnakat² /vi/ passive of *nakat²*. - iva *mitnikit*.

ن ك ح

نكح *nakaḥ (a)* /vt/ **1↑** to marry, get married to (a woman). **2↓** *[coarse]* to copulate with, lay (a woman). *mara mankuuḥa* a harlot. - vn *nikaaḥ*; ava *naakiḥ*; pva *mankuuḥ*.

اتنكح ʕitnakaḥ /vi/ passive of *nakaḥ*. - iva *mitnikiḥ*.

استنكح ʕistankaḥ /vi/ *[abus]* to throw one's weight around. ‖*mara mistankaḥa* a slut. - vn *ʕistinkaaḥ*; ava *mistankaḥ*.

ن ك د

نكد *nakad* /n/ torment, unhappiness, misery. *gaa-k nakad* may you be miserable! *ḥayat-ha nakad wi-hamm* her life is all misery and worry.

نكدى *nukadi* /adj * and pl *-yya*/ **1** miserable by nature. **2** oppressive, pernicious.

منكود *mankuud* /n pl *manakiid*/ wretch, scoundrel.

نكّد *nakkid* /vt/ **1** to annoy, irritate, put into a foul mood. **2** to make (s.o.'s life) a misery. *gooz-i mnakkid ʕalayya ʕiʃt-i ʕaʃaan ʕaawiz waad* my husband makes my life a misery because he wants a son. *ʕilaah-i ynakkid ʕaleek* God make your life a misery! - vn *tankiid*; ava/pva *minakkid*.

اتنكّد ʕitnakkid /vi/ to become or be made annoyed and miserable, become or be made depressed and irritable. - ava/iva *mitnakkid*.

ن ك ر

نكر *nakar (i)* /vt/ to deny, repudiate. *miin yinkir faḍl it-taʕliim* who would deny the benefit of education? *nakar gawaaz-u* he repudiated his marriage. ‖*nakar gimiil* to behave ungratefully. - vn *nukraan, nakaraan, nukraniyya*; ava *naakir*; pva *mankuur*.

ناكر *naakir* /prop n/: *naakir* (or *munkar) wi-nakiir* two angels who, according to Muslim popular belief, visit the dead upon their burial and question them severely on their faith. ‖*ʕaamil zayy' naakir wi-nakiir* constantly objecting.

نكرة *nakra* /n pl *-aat*/ a denial.

نكرة *nakira* /pl *-aat*/ **1** /adj/ unimportant, nondescript. **2** /n/ *[gram]* indefinite noun.
أنكر *ʔankar*[1]↑ /el/ more/most unpleasant or objectionable.
نكير *nakiir* /prop n/: *naakir wi-nakiir* see *naakir*.
اتنكّر *ʔitnakkar* /vi/ to affect a disguise. - vn *tanakkur*; ava *mitnakkar*.
¶ *ʔitnakkar li-* to turn one's back on. *ʔitnakkar li-xwaat-u* he abandoned his brothers and sisters.
تنكّرى *tanakkuri* /adj/ pertaining to disguise. *ħafl*[i] *tanakkuri* or *ħafla tanakkuriyya* fancy-dress party, masquerade.
أنكر *ʔankar*[2]↑ = *nakar*. - vn *ʔinkaar*; ava *munkir*; pva *munkar*.
منكر *munkar* /adj/ **1** abominable (especially in religious terms). **2** *munkar* (or *naakir*) *wi-nakiir* see *naakir*. — *munkaraat* /pl n/ **3** abominations.
استنكر *ʔistankar*↑ /vt/ to declare one's disapproval of. - vn *ʔistinkaar*; ava *mustankir*.

ن ك ر ى ز

نكريز *nakriiz* <T *nikriz*> /n/ *[mus]* mode in Arabic music beginning on C and having E flat, F sharp and B flat.

ن ك س

نكس *nakas (i)* /vt/ **1** to cause to relapse (into sickness). **2** to cause a setback (of fortune) to. - vn *naks, nakasaan*; ava *naakis*; pva *mankuus*.
نكسه *naksa* /inst n, pl *-aat*/ **1** a relapse (into sickness). **2** a setback, a reversal (of fortune). ‖ *ʔin-naksa* the Egyptian defeat of June 1967.
إنكيس *ʔinkiis* /n/ bad luck. *nigm-u dayman fil-ʔinkiis* he's always unlucky.
اتنكس *ʔitnakas* /vi/ **1** to suffer a relapse (into sickness). **2** to suffer a setback or reversal (of fortune). - iva *mitnikis*.
نكّس *nakkis* /vt/ **1** to keep low. *minakkis raas-u mil-kusuuf* he's hanging his head with shame. *leeh minakkisiin il-ɛalam* why are they flying the flag at half-mast? **2** to repair (a wall) by replacing crumbled masonry. - vn *tankiis*; ava/pva *minakkis*.
اتنكّس *ʔitnakkis* /vi/ passive of *nakkis*. - iva *mitnakkis*.

ن ك ش

نكش *nakaʃ (u)* **1** /vt/ to put into disarray, mess up. *nakʃaʃ ʃaɛr-i* he ruffled my hair, he messed up my hair. *baɛd*[i] *m-arattib il-hiduum gayy*[i] *tinkuʃ-ha* you come and scatter the clothes around after I've arranged them neatly? **2** to provoke, stir up (e.g., anger). — /vi/ **3** to scratch about, scrabble. *ma-tunkuʃ-ʃ*[i] *f-manaxiir-ak* don't keep picking your nose! *nakaʃt*[i] *fit-turaab ʕadawwar ɛat-taɛriifa* I scrabbled about in the dust searching for the half-piastre. ‖ *dayman yinkuʃ waraaya* he's always trying to make trouble for me (by picking holes in my work). - vn *nakʃ, nakaʃaan*; ava *naakiʃ*; pva *mankuuʃ*.
نكشة *nakʃa* /pl *-aat*/ instance noun of *nakʃ*.
اتنكش *ʔitnakaʃ* /vi/ passive of *nakaʃ*. - iva *mitnikiʃ*.

ن ك ف

نكفى *nakafi: ʔil-ɣudda n-nakafiyya* parotid gland.
ناكف *naakif* /vt/ to tease, needle, pester. *ɣuul in-nahaar bi-ynaakif ʔuxt-u* all day long he's getting at his sister. - vn *minakfa*; ava *minaakif*.
اتناكف *ʔitnaakif* /vi/ **1** to tease one another, needle one another, pester one another. **2** to be teased. - ava/iva *mitnaakif*.
استنكف *ʔistankif* /vi/ to disdain, consider beneath one's dignity. *ʔistankif yigiib li-ʔaxuu mayya yiʃrab* he resented having to bring water for his brother to drink. - iva *mistankif*.

ن ك ل[1]

نكّل *nakkil*[1]↑: *nakkil bi-* /vi/ to maltreat, harm. - vn *tankiil*; ava *minakkil*; pva *munakkal*.
اتنكّل *ʔitnakkil*[1]: *ʔitnakkil bi-* /vi/ (impersonal) passive of *nakkil*[1]. *leeh yitnakkil bii kida* why should he be maltreated in this way? - iva *mitnakkil*.

ن ك ل[2]

نيكل *neekal* <perh Fr *nickel*> /n/ **1** nickel. **2** /pl *nawaakil*/ metal marble.
نيكلة *nikla* /unit n, pl *nikal, niklaat, nakaayil*/ *[obsol]* two millimes, two-millime piece. *ma-ɛandii-ʃ nikla* I'm penniless. ‖ *ʕabu nikla* cheap and shoddy. - *raaħ f-abu nikla* to come to nothing.
نكّل *nakkil*[2] /vt/ to coat with nickel, chrome-plate. - vn *tankiil*; ava/pva *minakkil*.
اتنكّل *ʔitnakkil*[2] /vi/ passive of *nakkil*. - iva *mitnakkil*.

ن ك ه

نكهة *nakha* /n pl *-aat*/ flavour, aroma.

ن ل و ن

نولون *nuloon* (also *nawluun*) <Gr *naulon*> /n/ freight charges.

ن ل ى see م ل ى[1]: *ʔintala*

ن م
نم *nim* <P *nîm*> /n/ *[mus]* quarter sharp.

ن م ر [1]
نمره *nimra* <It *numero*> /n pl *nimar*/ **1a** number. ‖*numra rabḥa* winning number, commercial success, hit with the public -*nimar yanaṣiib* lottery tickets. **1b** score, grade, mark. *xadt' nimra kwayyisa fil-ḥisaab* I got a good mark in maths. **2a** number, turn (in a show). ‖*da-nta nimra* ≈ you're a real character! -*nimra qarɛa* (1) an old trick, a feeble trick. (2) a disappointing failure. **2b** trick, wile.
نمّار *nammaar: xitm' nammaar* number stamp, stamp for stamping serial numbers (e.g., on cheques).
نمّاره *nammaara* /n pl -*aat*/ numbering machine.
نمّر *nammar'* /vt/ to number, give a number to. -vn *tanmiir*; ava/pva *minammar*.
اتنمّر *ʔitnammar'* /vi/ to be numbered, be given a number. -iva *mitnammar*.

ن م ر [2]
نمر *nimr* /n pl *nimuur, numuur, numúra*/ tiger.
نمّر *nammar²* /vi/ **1** to set one's sights (on s.th.). *ʔana mnammar ɛala faqqa f-maṣr ig-gidiida ḥa-tifḍa qrayyib* I have my eyes on a flat in Heliopolis that will soon be vacated. **2** to crouch and be ready to pounce, stand in readiness. *ʔana mnammar-lu* I'm just waiting for a chance to catch him. -vn *tanmiir*; ava *minammar*.
اتنمّر *ʔitnammar²* = *nammar²*. -ava *mitnammar*.
استنمّر *ʔistinammar²* = *nammar*. -ava *mistinammar*.

ن م ر د
نمرود *namruud, namruud* /adj pl *namarda*/ **1** insolently ungrateful. **2** naughty, mischievous.
نمرد *namrad* /vt/ to make worldly-wise, make aggressive. *maṣr' namradit-u* Cairo taught him the ways of the world. -vn *namrada*; ava *minamrad*.
اتنمرد *ʔitnamrad* /vi/ **1** to behave with insolent ingratitude **2** to become aggressive, behave aggressively. *ʔis-sittaat itnamradu l-ʔayyam-di* ≈ women these days have burnt their bras. -iva *mitnamrad*.

ن م س [1]
نمس *nims* **1** /n pl *numuus, numúsa*/ **1a** ichneumon. **1b** astute person, shrewd person. **2** /coll n/ large, elongated variety of water-melon appearing in two forms: one with a dark green striped skin (*nims' ʔaxḍar*), the other with a light green striped skin (*nims' ʔabyaḍ*).
نميس *namiis* /adj */ **1** shrewd, astute. **2** cute, appealing.
نميسة *namiisa* /n pl *namaayis*/ *[rur]* broad gold necklace.

ن م س [2]
النمسا *ʔin-nimsa* /prop n/ Austria.
نمساوى *nimsaawi, nimsawi* **1** /adj */ Austrian. **2** /n */ an Austrian.

ن م س [3] see ن م و س [1]: *namuus'*, *namuusa, namusaaya, namusiyya*

ن م س [4] see ن م و س [2]: *namuus²*

ن م ش
نمش *namaʃ* /coll n/ freckles. *ɛandaha namaʃ fi-wiff-a-ha* she has freckles on her face.
نمشة *namaʃa* /unit n, pl -*aat*/ a freckle.
نمشايه *namaʃaaya* = *namaʃa*.
نمّش *nammiʃ* /vi/ to become freckled. -vn *tanmiiʃ*; ava *minammiʃ*.

ن م ط
نمط *namaṭ* /n pl *ʔanmaaṭ*/ **1** style, pattern. *kull-u-hum nafs in-namaṭ* they're all the same pattern. **2** method, way. *bi-yitɛimlu b-nafs in-namaṭ* they're made the same way.

ن م ك
نمكى *nimaki* /adj * and pl -*yya*/ fussy, finicky, fastidious.

ن م ل
نمل *naml* /coll n/ ant(s).
نمله *namla* /unit n, pl -*aat*/ an ant. *ʔilli tigmaɛ-u n-namla f-sana yaxd-u g-gamal fi-xuff-u [prov]* what the ant collects in a year the camel carries off on a (single) hoof.
نملايه *namlaaya* = *namla*.
نمليّة *namliyya* /n pl -*aat, namaali*/ **1** food-safe. **2** dresser or cupboard with doors.
نمّل *nammil* **1** /vt/ to cause to tingle or have pins and needles. **2** /vi/ to tingle, have pins and needles. *riglay-ya btadu ynammilu* my legs started tingling. -vn *tanmiil*; ava/pva *minammil*.
اتنمّل *ʔitnammil* /vi/ to be made to tingle. -iva *mitnammil*.

ن م م
نمّ *namm (i)* /vi/ to spread scandal, report back to one who is the subject of gossip in order to cause a rift. -vn *namm, namamaan*; ava *naamim*.

نميمه *namiima* /n/ back-biting.
نمّام *nammaam* /n */ scandal-monger.

ن م ن م
نمنم *namnim* /vi/ **1** to mumble, mutter to oneself, talk under one's breath. *baṭṭal namnama* stop muttering! **2** to nibble at food, take very tiny pieces of food. — /vt/ **3** to make tiny. *ma-tnamnim-ſ il-luqma kida* don't cut the bread in such tiny pieces. - vn *namnama*; ava/pva *minamnim*.
نمنم *nimnim* /adj/ tiny, puny, meagre, very small.
نمنومه *namnuuma* /n pl *-aat, namaniim*/ tiny piece.
نمنومايه *namnumaaya* /n pl *-aat*/ = *namnuuma*.
اتنمنم *ſitnamnim* /vi/ to be made tiny. - iva *mitnamnim*.

ن م و
نمى *nama*↑ *(u, i)* /vi/ to grow. *namit-lu ſaɛra f-ṭarṭuufit manaxiir-u* a hair grew on the end of his nose. *ſil-bilaad in-naamiya* the developing countries. - vn *numuww*; ava *naami*.
تنمية *tanmiya*↑ /n/ development. *tanmiya ſiqtiṣadiyya* economic development.

ن م و ذ ج see ن م و ز ج

ن م و ز ج
نموذج *namuuzag* <P *namûdaj*> /n pl *namaazig*/ **1** model. *namuuzag lil-mabna* an (architect's) model of the building. **2** printed form, blank form.
نموذجى *namuuzagi*↑ /adj */ model, exemplary. *madaaris namuuzagiyya* model schools.

ن م و س [1]
ناموس *namuus*[1] /coll n/ mosquito(es).
ناموسه *namuusa* /unit n, pl *-aat*/ a mosquito.
نوسايه *namusaaya* = *namuusa*.
ناموسيّه *namusiyya* /n pl *-aat*/ mosquito-net. ‖*sagaayir namusiyya* small cigarettes, ladies' cigarettes. - *ſis-sitt*[1] *fin-namusiyya* Cape gooseberry fruit(s).

ن م و س [2]
ناموس *namuus*[2] /n/ (natural) law. *namuus il-koon*↑ the law of the universe.

ن م ى see ن م و : *tanmiya*

ن ن ن ا
ننه *ninna* **1** /interj/ word used to lull a child to sleep. **2** /n/ *[children]* sleep.

ن ن ن و س
ننوس *nannuus* /adj/ cute sweet (of children).

(ن ن ن ى)
نى *ninni*[1] /n/ pupil (of the eye). ‖*huwwa zayy*[i] *ninni ɛenay-ya* he is very dear to me, he is the apple of my eye. *-ḥ-aḥuṭṭ-u f-ninni ɛeen-i* I'll watch over him with loving care.
نى *ninni*[2] /n/ little child. *ya ninni [deriſ]* you cry-baby!

ن ه ء see [1] ن ه ى : *nihaaſi*

ن ه ب
نهب *nahab (a)* /vt/ to loot, pillage, rob. - vn *nahb, nahabaan*; ava *naahib*; pva *manhuub*.
نهيبه *nihiiba* /n pl *-aat, nahaayib*/ property free for the taking. *ſif-firka bin-nisba luhum nihiiba w-bass* as far as they're concerned the company is fair game for anybody.
نهّاب *nahhaab* /n pl *nahhaaba*/ looter, pillager, robber.
اتنهب *ſitnahab* /vi/ to be looted, be pillaged. - iva *mitnihib*.
استنهب *ſistanhab*[i] /vt/ to swindle, rob. *ſintu ḥa-tistanhabuu-na* are you going to rob us? *di ɛamaliyyit istinhaab* this is sheer robbery. - vn *ſistinhaab*; ava *mistanhab*.

ن ه ج [1]
نهج *nahag (a)* /vi/ to have difficulty in breathing, gasp for breath, pant. *law mifiit ſanhag wi-m-aqdar-ſ aṭlaɛ is-sillim* if I walk I have to fight for breath, and I can't climb stairs. - vn *nahg, nahagaan*; ava *naahig*.

ن ه ج [2]
منهج *manhag* /n pl *manaahig*/ **1**↑ *[acad]* curriculum. **2**↑ method, procedure. *ſil-manhag it-tagriibi* the experimental method.

ن ه د
نهد *nahd, nihd* /n pl *nuhuud, nihuud, nuhúda*/ breast. *ſil-bitt*[i] *nhud-ha kibrit wi-ɛayza l-ɛariis* the girl's breasts have filled out and it's time for her to find a husband.
نهّد *nahhid* /vi/ to fill out, swell. (of breasts). - vn *tanhiid*; ava/pva *minahhid*.
تنهيد *tanhiid* /vn/ sighing.
تنهيدة *tanhiida* /inst n, pl *-aat, tanahiid*/ a sigh.
اتنهّد *ſitnahhid* /vi/ to sigh. *fiḍlit rayḥa gayya w-titnahhid li-ḥadd*[i] *ma wiṣil goz-ha* she went on walk-

ing to and fro and sighing till her husband arrived. - ava *mitnahhid*.

ناهد *naahid* /vt/ to nag, pester. *ṭuul in-nahaar yinaahid (f-)ixwaat-u ɛafaan il-ɛagala* all day long he's nagging his brothers and making trouble over the bicycle. - vn *minahda*; ava *minaahid*.

اتناهد *ʔitnaahid* /vi/ to be nagged, be pestered. - iva *mitnaahid*.

ن ه ر ¹

نهر *nahr*↑ /n pl *ʔanhaar*/ **1** river. *nahr in-niil* the River Nile. **2** column (of print).

نهرى *nahri* /adj */ riverine. *ʔutubiis nahri* river-bus. *ʔil-baḥriyya n-nahriyya* the River Marine Corps.

ن ه ر ²

نهار *nahaar, nihaar* /n/ day, daytime. *ṭuul in-nahaar* all day long. *lamma yiṭlaɛ in-nahaar* when day comes. *min nahaar gawaaz-ak* since the day you got married. ‖*ʔin-nahar-da* today. *-diik in-nahaar* the other day. *-nahaar-ak saɛiid* and *nahaar-ak ʔabyaḍ*↓ and *nahaar-ak zayy il-full*↓ etc. conventional daytime greetings ≈ good day! have a nice day! - *ya nhaar ʔiswid* (exclamation of surprise, bewilderment etc.) ≈ good grief! - *nahaar-ak ʔiswid* ≈ you're in real trouble!

¶ *nahaar ma* /conj/ on the day that, when. *nahaar ma tingaḥ tibqa tgii-ni wi-tqul-li ʔinnak ɛaayiz ɛagala* when you pass (your exam), that's when you can come and ask for a bicycle. *faakir nahaar ma zzaḥlaqt*ª *ɛas-sillim wil-bitt' diḥkit ɛaleek* do you remember the day you slipped on the stairs and the girl laughed at you? *min nahaar ma ɛrift illi ḥaṣal wi-ʔana zaɛlaan* ever since I got to know what happened I've been upset.

ن ه ر ز

نهرز *nahriz* /vt/ to give a hard time to, subject to extreme pressure. *ʔaxuu k-kibiir nahriz-u miḍ-ḍarbª ɛafaan yitʔaddib* his elder brother gave him a sound beating so that he would mend his manners. - vn *nahraza*; ava/pva *minahriz*.

اتنهرز *ʔitnahriz* /vi/ passive of *nahriz*. - vn *tinahriiz*; ava *mitnahriz*.

ن ه ز

انتهز *ʔintahaz* /vt/ to seize upon (a chance). *ʔintahaz furṣa* to seize an opportunity. - vn *ʔintihaaz*; ava *mintihiz*.

نهّاز *nahhaaz: nahhaaz lil-furaṣ* opportunist.

انتهازى *ʔintihaazi* /n */ opportunist.

ن ه ش

نهس *nahaʃ (a)* /vt/ to bite into, tear off, gnaw at (flesh). ‖*nahaʃ fi-laḥm(-u)* to criticize (s.o.) severely, as in *ʔin-naas bi-tinhaʃ fi-laḥm-i b-sabab-ak* people are pulling me to pieces on your account. - *ɛammaliin yinhaʃu ɛarḍ-u maɛa ʔinnu ṣaaḥib faḍlª ɛaleehum* they're slandering him despite what he's done for them. - vn *nahʃ, nahaʃaan*; ava *naahiʃ*; pva *manhuuʃ*.

نهشة *nahʃa* /pl *-aat*/ instance noun of *nahʃ*.

اتنهس *ʔitnahaʃ* /vi/ to be bitten off, be torn off, be gnawed at (of flesh). - iva *mitnihiʃ*.

ن ه ض

نهض *nahaḍ*↑ *(a)* /vi/ to arouse oneself, shake off one's sloth. *ya maṣri ʔirgaɛ li-ɛawayd-ak wi-nhaḍ* Egyptian, return to your old ways and rise again! - vn *nuhuuḍ, nahḍa*; ava *naahiḍ*.

نهض *nihiḍ (a)* **1** /vt/ to catch up with. *nihiḍt-u ɋabl' ma yidxul il-beet* I caught (up with) him before he entered the house. **2** /preverb/ to act quickly, do in a hurry. *nihiḍ ṭaffa n-naar ɋabl' ma timsik fil-ɛaff* he quickly put out the fire before it could get a hold on the furniture. *ʔinhaḍ (taɛaala)* hurry! - vn *nahaḍaan*; ava *naahiḍ*; pva *manhuuḍ*.

نهضة *nahḍa*↑ /n pl *-aat*/ revival, renaissance. *ɛaṣr in-nahḍa* the age of the Renaissance.

نهّض *nahhaḍ* /vt/ to cause to catch up with. - vn *tanhiiḍ*; ava/pva *minahhaḍ*.

اتنهّض *ʔitnahhaḍ* /vi/ passive of *nahhaḍ*. - iva *mitnahhaḍ*.

ناهض *naahiḍ* **1**↑ /vt/ to stand up to, resist. *maṣr' bi-tnaahiḍ il-ɛunṣuriyya* Egypt fights racism. **2** /vi/ to cope. *ʔana miʃ ɋaadir ʔanaahiḍ ɛala ṭalabaat-u* I cannot cope with his demands. *ʔana ḥ-anaahiḍ ɛala ʔeeh walla ɛala ʔeeh* ≈ how can I cope with all this? - vn *minahḍa*; ava *minaahiḍ*.

اتناهض *ʔitnaahiḍ* /vi/ **1** passive of *naahiḍ* 1. **2** (impersonal) passive of *naahiḍ* 2. *ma-b-yitnahiḍ-ʃ' ɛalee fluus* his demands for money can't be coped with. - ava/iva *mitnaahiḍ*.

ن ه ق

نهّق *nahhaɋ* /vi/ to bray (of a donkey). *ḥuṭṭ il-ḥumaar fi-riiḥ il-baɣl in ma kaan yitɛallim ʃahiiɋ-u yitɛallim nihiiɋ-u [prov]* ≈ people are bound to pick up each other's habits. - vn *nihiiɋ, tanhiiɋ*; ava *minahhaɋ*.

اتنهّق *ʔitnahhaɋ* /vi/ (impersonal) passive of *nahhaɋ*. *ʔitnahhaɋ ɛaleeha* she was brayed at. - iva *mitnahhaɋ*.

ن ه م see ل ه م : *ʔanham*

ن ه ن ه

نهنه *nahnah* /vi/ **1** to neigh. **2** to whimper. - vn *nahnaha*; ava *minahnah*.

اتنهنه *ʕitnahnah* /vi/ to whimper. - ava *mitnahnah*.

ن ه و see ن ه ي ١ : *nahwa*

ن ه و ن د

نهاوند *nahawand* <P *nih-âwand*> /n/ *[mus]* mode in Arabic music starting on C and having E flat, A flat and B flat.

ن ه ي ١

نهى *naha*١ *(i)* /vt/ to finish. *naha f-fuɤl*ⁱ *b-surʕa* he finished the work fast. *ʕana ḫ-anhi-lku l-ʕigraʕaat* I'll complete the formalities for you. - vn *nahw*; ava *naahi*; pva *manhi*.

نهوة *nahwa* /pl *-aat*/ instance noun of *nahw*.

منهى *manhi* /adj/ thoroughly cooked.

نهاية *nihaaya* /n pl *-aat*/ end. *fin-nihaaya* in the end, finally. *ʕana ḫaasis ʕinn*ⁱ *nhayt-i bi-tqarrab* I feel that my end is approaching. ‖ *nihayt-u* ≈ to cut a long story short.

نهائى *nihaaʕi* **1** /adj/ final. *ʕin-natiiga n-nihaʕiyya* the end result. **2** /adv, always w neg/ at all, whatsoever. *ma-ʕandii-ʃ filuus nihaaʕi* I haven't any money at all. ¶ *nihaʕiyyan* /adv, always w neg/ ever, at all. *ma-ʃuftuu-ʃ nihaʕiyyan* I haven't seen him at all.

متناهى *mutanaahi*↑ /adj/ extreme. *ṣabr*ⁱ *mutanaahi* extreme patience.

أنهى *ʕanha*↑ = *naha*١. - vn *ʕinhaaʕ*; ava *minhi*.

انتهى *ʕintaha*١ /vi/ **1** to come to an end, finish. *ʕintaha l-faṣl il-ʕawwalaani* the first act came to an end. *ʃahiyyit-i lil-ʕakl intahit* my appetite is gone. **2** to die. - vn *ʕintihaaʕ*↑; ava *mintihi*.

¶ *ʕintaha min*↑ to have done with.

منتهى *muntaha* /n in constr/ the extreme of, the ultimate of. *fi-muntaha g-gamaal* extremely beautiful. *bi-muntaha d-diqqa* with extreme precision.

ن ه ي ٢

نهى *naha*٢↑ *(i, a)* /vt/ to prohibit. *ʕid-diin bi-yinhii-na ʕan iz-zina* religion prohibits us from adultery. - vn *nahy, nahayaan*; ava *naahi*; pva *manhi*.

انتهى *ʕintaha*٢ /vi/ to desist (from doing s.th.), comply with a prohibition. *ʕintaha ʕan ik-kidb* he stopped lying. - vn *ʕintiha*; ava *mintihi*.

ن و ا

نوا *nawa*١ <P *nawâ*> /n/ *[mus]* name given to the note G above middle C. ‖ *nawa ʕasar* mode in Arabic music starting on C and having E flat, F sharp and A flat.

ن و ا ر

نوار *nawaar* <Fr *noire*> /n/ *[mus]* crotchet, quarter note.

ن و ب ١

ناب *naab*٢ *(u)* /vt/ **1** it profited (s.o.). *ma-nab-nii-ʃ min musaʕdit-u liyya ʕilla ʕaṭala* his help brought me nothing but delay. *la nab-ni fuɤl*ⁱ *wala ʕakl* I got neither work nor food. *ma-nab-nii-ʃ minnu ḫaaga ɤeer it-taʕab* I got nothing but trouble from him. ‖ *yinuub-ak sawaab* may you be rewarded (by God). **2** to befall (usually of trouble). ‖ *ʕilli ṣaab-u w-naab-u* the troubles that befell him. - vn *noob, niyaaba*; ava *naayib*.

¶ *naab ʕan* to take the place of. *ʕil-bilastik mumkin yinuub ʕan il-xaʃab* plastic can be used in place of wood. *ʕil-wakiil yinuub ʕan ir-raʕiis fi-ɤyaab-u* the deputy stands in for the president when he's absent.

نوبة *nooba* /n pl *-aat*/ **1** time, occasion. *kamaan nooba* one more time. *ʕin-nooba lli faatit* last time. *gat saliima n-nobaa-di* it turned out all right this time. *baqit tiruuḫ kull*ⁱ *yoom nobteen* she took to going twice a day. **2** bout, fit (of illness). *noobit ʕinfilwinza* a bout of influenza. *nooba qalbiyya* a heart attack. **3** shift, turn. *noobit ḫiraasa* guard duty. **4** *[mil]* trumpet call. *noobit ṣaḥayaan* reveille.

نوبتى، نوبتجى *nabatʃi, nobatʃi* <T *nöbetçi*> /n pl *-yya*/ one on duty, one taking a shift. *ẓaabiṭ nobatʃi* officer on duty.

نيابة *niyaaba* /n/ office of a public attorney, office of a public prosecutor. *wakiil niyaaba* public attorney, public prosecutor. ‖ *niyaaba ʕidariyya* department within a government ministry responsible for the investigation of serious offences.

نايب، نائب *naayib*١, *naaʕib*↑ /n pl *nuwwaab*/ **1** representative, deputy. *naaʕib waziir* deputy minister. ‖ *maglis in-nuwwaab [obsol]* the House of Representatives (the lower house of the Egyptian parliament before 1952). - *ʕin-naayib il-ʕaam* the attorney general. **2** *[med]* houseman.

نايب *naayib*٢ /n pl *nawaayib*/ share, portion. *ʕil-ɤaayib ma-luu-ʃ naayib [prov]* ≈ out of sight out of mind.

نايب *naayib*٣: *xaayib wi-naayib* a dead loss, a good-for-nothing.

نائبة *nayba* /n pl *-aat, nawaayib*/ disaster, calamity. *gat-u nayba - kull*ⁱ *fuɤl-u baayiẓ* ≈ the hell with him, all his work is lousy.

مناب *manaab*↓ /n pl *-aat*/ share, portion. *ʕinta kalt*ᵃ

ɛalayya manaab-i you've eaten my share! ‖ *ʃil-quṭṭa taakul manaab-u* (he's so tame and helpless that) a cat can eat his share (of meat without his being able to stop her).

نوّب *nawwib* /vt/ to depute, appoint as a deputy or representative. *ʃana nawwibt-u ɛanni f-ṣarf il-mukafʃa* I have given him authority to cash the bonus on my behalf. - vn *tanwiib*; ava/pva *minawwib*.

اتنوّب *ʃitnawwib* /vi/ to be deputed, be appointed deputy or representative. - iva *mitnawwib*.

ناوب *naawib* /vi/ to take alternative shifts. *ninaawib maɛa baɛḍ' fiʃ-ʃuɣl* we should take alternate turns at the work. - vn *minawba*; ava *minaawib*.

مناوبة *minawba* /n pl *-aat/ [rur]* period when irrigation canals are filled (being a part of the irrigation cycle).

مناوب *minaawib* /adj */ on duty. *ʃiẓ-ẓaabiṭ il-minaawib* the duty officer.

اتناوب *ʃitnaawib* /vt/ to take alternative turns (at). *fii talat wardiyyaat bi-yitnawbu (fi)f-ʃuɣl* there are three rotating work shifts. - vn *tanaawub*; ava *mitnaawib*.

أناب *ʃanaab = nawwib. miin ʃanaab-ak* who's given you the right to be a deputy? - vn *ʃinaaba*; ava *muniib*.

انتاب *ʃintaabˆ* /vt/ to befall, afflict. *ʃintaab-u maraḍ* he was stricken with a disease. - vn *ʃintiyaab*; ava/iva *mintaab*.

ن و ب [2]

النوبة *ʃin-nuuba* /prop n/ Nubia.

نوبي *nuubi* **1** /adj */ Nubian. **2** /n */ a Nubian. **3** /n, no pl/ the Nubian language.

ن و ب [3]

see ن ا ب : *naab'*

ن و ت

نوت *nuuta, noota* <It *nota*> /n pl *-aat, niwat/* **1** notebook, note pad. ‖ *ɛan-nuuta* on tick, on credit, as in *bi-yiʃtiru ɛan-nuuta* they buy on tick. **2** *[mus]* **2a** note. **2b** written music.

ن و ج

نوجة *nooga, nuuga* <Fr> /n pl *-aat/* nougat.

ن و ح

ناح *naaḥ' (u)* /vi/ to wail, lament. *kutr in-nooḥ yiɛallim il-buka [prov]* much lamentation gets one into the habit of weeping. - vn *nooḥ*; ava *naayiḥ*.

مناحة *manaaḥa* /n/ place of wailing, place of lamentation.

نوّح *nawwaḥ* /vi/ to wail or lament repeatedly. - vn *tanwiiḥ*; ava *minawwaḥ*.

ن و خ

مناخ *manaaxˆ* /n/ climate (physical and metaphorical). *manaax il-balad* the climate of the country. *ʃil-manaax il-fikri* the intellectual climate.

ن و ر [1]

نار *naar* /fem n, pl *niraanˆ*/ **1** fire. *wallaɛ in-naar* light the fire. *lamma l-laban yifuur ʃibɛid-u ɛan in-naar* when the milk boils, remove it from the heat. ‖ *mayyit naar* any strong acid (notably nitric acid). - *ḥagar naar* grindstone. - *naar-u ḥamya* (1) he is furious. (2) he is very active. - *been nareen* in a dilemma. - *(da) naar ɛala ɛalam* he's very famous, he's known everywhere. - *qaaɛid ɛala naar* very anxious, like a cat on hot bricks. - *ʃaah ya naar-i* how furious I am, as in *ʃaah ya naar-i mil-bitt* how furious I am with the girl! *ʃaah ya naar-i law kunt' ʃaqdar ʃaquul lil-baaʃa ʃaddib ʃawlaad-ak* I really would have given the Pasha a piece of my mind had I been able to tell him, 'Discipline your children'. — *ʃin-naar* /no pl/ **2** firing, shooting. *xaṭṭ in-naar* the line of fire, the battle front. *ḍarab* (or *ʃaṭlaq) naar* to fire, shoot. **3** hellfire, Hell. *ʃin-naar wala l-ɛaar [prov]* ≈ death before dishonour. *xaduu-ni min id-daar lin-naar [prov]* they took me from (the comforts of) home to Hell (e.g., to prison). *naar-u wala gannit ɣeer-u [prov]* Hell with him is better than Heaven with another. — /adv/ **4** extremely (hot). *ʃig-gaww' suxn' naar* the weather is terribly hot. ‖ *ɣaali naar* very expensive.

ناري *naari* /adj/ **1** pertaining to fire, fiery. **2** pertaining to shooting. *ʃasliḥa nariyya* firearms.

نور *nuur* /n pl *ʃanwaar/* **1** light. *ʃiḍra fin-nuur ɛafaan ma-tbawwaẓ-ʃ' ɛnee-k* read in the light so as not to ruin your eyes. ‖ *ɛaleek nuur* ≈ bravo! well done! - *ya nuur ɛenay-ya* O light of my eyes! (exclamation of affection). - *kaamil in-nuur* Full of Light (epithet of the Prophet Muhammad). - *ya nuur in-nabi* O light of the Prophet! (an exclamation of delight). - *ṣabaaḥ in-nuur* and *masaaʃ in-nuur* response to any of the conventional morning or evening greetings ≈ good morning (to you)! good evening (to you)! - *sabt in-nuur [Chr]* Holy Saturday. - *ma-ʃufnaa-k ya nuur ʃilla lamma txazzaḍit il-ɛiyuun [prov]* we didn't see you, O light, till after the eyes had been put out (of something that comes only after great trouble and then too late). **2** lighting, (loosely) electricity. *ʃin-nuur ɛas-saakin* lighting is payable by the tenant. *ʃil-ʃasanseer miʃ ʃaɣɣaal ɛafaan ma-fii-ʃ nuur* the lift isn't working because there isn't any electricity.

نورة *nuura* /n pl *-aat/ = nawwaara.*
نورانى *nuraani* /adj/ radiant.
نورانيّه *nuraniyya* /n/ radiance. *wiff-u ɛalee nuraniyya min yoom ma ħagg* his face has acquired a radiance since the time he went on the pilgrimage.
نيّر *nayyir, niyyir* /adj/ *[fig]* luminous, light-giving. *ya salaam ɛaleek wi-ɛala ʕafkaar-ak in-nayyira [joc]* ≈ my! what bright ideas you have!
نوّار *nawwaar* /coll n/ blossom(s).
نوّارة *nawwaara* /unit n, pl *-aat/* a blossom. ‖*ya nawwaara* flirtatious form of address to a girl.
أنور *ʔanwar* /el/ more/most bright, luminous or shining.

منور *manwar* /n pl *manaawir/* light shaft (e.g., such as is found in the centre of a block of flats).
منارة *manaara* /n pl *-aat, manaayir/* **1** lighthouse. **2** *[Chr]* church steeple, bell tower.
نوّر *nawwar* /vt/ **1a** to give light (to), shine (upon). *nawwar il-ʕooḍa* turn the light on in the room! *nawwart-i-lu fa-ddaa-li ṭ-ṭariiq* I flashed my lights at him so he gave me the road. *ʕil-ʕabajuura mnawwara f-wiff-i* the lamp is shining in my face. ‖*nawwart* and *nawwart il-beet* and *nawwart ʰ ħittit-na* you have brought light (to the house, to our neighbourhood etc.) (conventional compliments to a guest). - *ʕallaah yinawwar (ɛaleek)* ≈ well done! thank you! **1b** to enlighten. *baqaa-li talat siniin laayiṣ miʃ laaqi ħadd ʰ ynawwar-ni* I've been three years at a loss and found no one to put me straight. — /vi/ **2** to give light. *fii ḍooʕ nawwar min biɛiid* a light shone from a distance. *ʕil-lamba di bi-tnawwar* this bulb is in working order. **3** to blossom. *ʕiʃ-ʃatla kibrit wi-nawwarit* the seedling grew and flowered. - vn *tanwiir*; ava/pva *minawwar.*
اتنوّر *ʔitnawwar* /vi/ **1** to be lit up, be illuminated. **2** to be enlightened. - iva *mitnawwar.*
استنور *ʔistanwar* /vt/ to select for brightness or light. *ʔistanwar-lak makaan tiqra fii* find a well-lit area where you can read. - ava *mistanwar.*
استنار *ʔistanaar: ʔistanaar bi-* /vi/ to seek enlightenment from. *leeh ma-tistinir-ʃ ʰ b-raʔy ʰ waaħid xabiir fil-qanuun* why don't you consult the opinion of a legal expert. *ɛala sabiil il-istinaara* (just) by way of seeking information, as in *ʕana b-asʕal-ak ɛala sabiil il-istinaara w-miʃ qaṣd-i ʔinnak ʔinta lli tnaffiz il-maʃruuɛ* I am just asking you to explain (the matter) - I don't mean you to be the one to carry out the project. - vn *ʔistinaara*; ava *mistiniir.*
الاستنارة *ʔil-ʔistinaara* /n/ *[hist]* the Enlightenment.
مستنير *mustaniir* /adj */ knowledgeable, enlightened.

ن و ر [2]
نور *nawar* /coll n/ **1** gypsies. **2** rowdy and disreputable people.
نورى *nuuri* /unit n */ **1** a gypsy. **2** a swindler. *ʔalf ʰ nuuri wala damanhuuri [prov]* a thousand con men are preferable to a single Damanhouri (a comment on the alleged Damanhouri propensity for cunning and swindling).

ن و ر [3]
مناوره *munawra, minawra* <Fr> /n pl *-aat/* manoeuvre.
ناور *naawir* /vi/ to manoeuvre. - vn *munawra, minawra*; ava *munaawir, minaawir.*

ن و ر [4] see ن و ا ر : *nawaar*

ن و ر ج
نورج *noorag* /n pl *nawaarig/* threshing sled (see Pl.D, 1).

ن و ر د
نواردى *nuwardi* /adj/ blue roan (of a horse).

ن و س
نوّاسة *nawwaasa* /n pl *-aat/* night-light, small light left burning all night. - also *wannaasa.*

ن و ش
نوس *nawaʃ (i)* /vt/ to confuse, perplex. *ʔinta nawaʃt-i-ni min xuruug-ak wi-duxuul-ak* you've driven me to distraction with your comings and goings. ‖ *ʔig-gadaɛ da ɛandu nawaʃ* this guy is soft in the head. - vn *nawaʃ, nawaʃaan*; ava *naawif*; pva *manwuuf.*
منووش *manwuuf* /adj * and pl *manawiif/* soft in the head, crazy, touched.
مناويشى *manawiifi* /adj invar/ crazy, cuckoo.
نوسة *nooʃa* /n pl *-aat, niwaʃ/* a disturbance of the mind. *gat-lu nooʃa kida qaɛad yiqrab fil-ɛiyaal* he went off his head for a while and kept hitting the children.
اتنوس *ʔitnawaʃ* /vi/ **1** to be or become confused or perplexed. **2** to become disturbed in the mind. - ava/iva *mitniwif.*
ناوش *naawif* /vt/ to have a brush with, skirmish with. - vn *minawʃa, munawʃa*; ava/pva *minaawif.*
اتناوش *ʔitnaawif* /vi/ **1** to skirmish. *ʔig-geʃeen itnawʃu qabl il-iftibaak il-fiɛli* the two armies skirmished before the real engagement. **2** passive of *naawif.* - ava/iva *mitnaawif.*

ن و ط
نوط *nooṭ* /n pl *ʕanwaaṭ*/ medal, decoration, order.

ن و ع
نوع *nooɛ* /n pl *ʕanwaaɛ*/ kind, type. *ʕidduu-ni birʃaam noɛeen* they gave me two sorts of pills. *sagaayir nooɛ mumtaaz* fine quality cigarettes. *da miʃ min in-nooɛ illi b-afaḍḍal-u* that's not of the kind I prefer. *ʕiṭ-ṭalaaq ʕanwaaɛ* divorce is of various types. *ʕig-ginn' b-ʕanwaaɛ-u rakib-ha* she's possessed by every variety of jinn. ‖*tariix il-milaad wi-nooɛ il-mawluud* the date of birth and sex of the child.
نوعى *nawɛi↑* /adj/ **1** pertaining to class or type. *mustawayaat nawɛiyya lis-saqaafa* various levels of culture. **2** *[phys]* specific. *ḥaraara nawɛiyya* specific heat.
نوعيّة *nawɛiyya↑* /n pl *-aat*/ type, sort, category. *munʃaʕaat min kull in-nawɛiyyaat* establishments of every sort.
نوّع *nawwaɛ* /vt/ to diversify, vary. *nawwaɛu l-ʕintaag bitaɛ-hum ɛaʃaan yizawwidu l-mabiɛaat* they varied their production so as to increase sales. - vn *tanwiiɛ*; ava/pva *minawwaɛ*.
منوّعات *munawwaɛaat* /pl n/ variety acts.
اتنوّع *ʕitnawwaɛ* /vi/ to be or become diversified or varied. - ava *mutanawwiɛ*; ava/iva *mitnawwaɛ*.

ن و ف
النيافة *ʕin-niyaafa: ṣaaḥib in-niyaafa [Chr]* His Grace (title accorded to a bishop in the Coptic Church).

ن و ف ى
نوڤى *noovi* <It *nuova*> /adj invar/ brand-new.

ن و ق
ناقة *naaqa* /n pl *nuuq, niyaaq*/ she-camel. ‖*bizz in-naaqa* variety of grape.

ن و ل [1]
نال *naal (u)* /vt/ **1** to obtain, achieve. *kull' sana wi-nta ṭayyib wis-sana g-gayya tnuul kull illi f-baal-ak* the season's greetings and may you achieve all you hope for in the coming year. **2** to affect. *ma-yṣaḥḥ'-ʃ yinul-ni ḍarar min ɛamaayil ɤeer-i* harm shouldn't come to me through the doings of others. - vn *nool, nawalaan, nawaal*; ava *naayil*.
نوّل *nawwil* /vt/ **1** to cause to obtain, cause to get hold of. *rabb-i-na ynawwil-ak illi f-baal-ak* may Our Lord grant you your desire! **2** to hand over. *ʕana ʕanawwil-huu-lak wil-baaqi ɛaleek* I'll hand him over to you and the rest is your business! ‖*ʕaah law yinawwilu-huu-li* ≈ if only I could lay my hands on him! - vn *tanwiil*; ava/pva *minawwil*.
اتنوّل *ʕitnawwil* /vi/ passive of *nawwil*. - iva *mitnawwil*.
ناول *naawil* /vt/ **1** to hand to. *nawil-ni ʃ-ʃakuuʃ* hand me the hammer. ‖*maktab munaawil* telegraph relay office. - *ʕagr' mnaawil* the reward of the carrier, the reward of the go-between, as in *ʕana liyya fil-xeer illi tɛamal da ʕagr' mnaawil* I only deserve credit for acting as go-between in the good that was done (i.e., what has been achieved didn't cost me anything). **2** *[Chr]* to administer communion to. - vn *minawla*; ava *minaawil, munaawil↑*.
مناول *minaawil* /n */ builder's mate. ‖*banna wi-mnaawil* see *banna*.
اتناول *ʕitnaawil* /vi/ **1** passive of *naawil*. **2** *[Chr]* to receive communion. - vn *tanaawul*; ava/iva *mitnaawil*.
تناول *tanaawul* /n/ *[Chr]* holy communion.
متناول *mutanaawil[1], mutanaawal* /n/ access, reach. *fi-mutanaawil ig-gamiiɛ* within everybody's reach, available or accessible to everybody. *fi-mutanaawil il-yadd* within reach, possible, accessible, available.
متناول *mutanaawil[2]* /n */ *[Chr]* communicant.

ن و ل [2]
نول *nool* /n pl *ʕanwaal*/ loom.

ن و ل و ن see ن ل و ن: *nawluun*

ن و م
نام *naam (a)* /vi/ **1a** to sleep. ‖*naam ɛala wdaan-u* he was oblivious, he paid no attention. - *naayim ɛala rooḥ(-u)* living in a world of (one's) own. - *ʕabu ɛeen nayma* one feigning innocence and innocuousness. - *ʕana naayim* I pass (e.g., in card games). - *naam maɛa [euphem]* to sleep with, have sexual intercourse with. **1b** to lapse, fall into desuetude. *ʕil-maʃruuɛ naam* the project was shelved. *ʕis-suuq naam* the market fell into a recession. **2** to lie, lie down, lie flat. *ʕig-gamuusa naamit ɛal-ʕarḍ* the buffalo lay down on the ground. *liḥaam ɛan-naayim* welding on a horizontal surface. **3** to go flat (of a tyre or battery). - vn *noom*; ava *naayim*.
¶ *naam ɛala-* (1) to keep quiet about (s.th. till a future date). *ʕana ɛandi faqqa w-naayim ɛaleeha l-ɤaayit ma ʕalaqii-li waaḥid suɛuudi ʕaw kuweeti ʕaʕaggar-haa-lu b-taman kuwayyis* I have a flat I'm sitting on till I find a Saudi or Kuwaiti to rent it to for a good sum. (2) to neglect, let slide. *ḥ-asiib il-mawduuɛ maɛaak wi-ʕiwɛa*

tnaam ɛalee I'll leave the matter with you, and don't you dare neglect it.

نوم *noom* /n/ sleep. ‖ *ʕabu n-noom* poppy. - *wa-law kunt*ᵃ *ḥ-akammil ɛaʃaa-ya noom* ≈ even if I have to go to bed supperless, as in *da ʕana ʕaɛiif bi-ʃaraf-i wa-law kunt*ᵃ *ḥ-akammil ɛaʃaa-ya noom* I'd rather live honestly even if I go without food.

نومة *nooma* /n/ **1** a sleep. *ʕana lissa ṣaaḥi min nooma ṭawiila* I've just got up from a long sleep. *raaḥit ɛalayya nooma* I've overslept. **2** /pl *-aat*/ sleeping place. *ruuḥ gahhiz nomt-ak* go and prepare yourself a place to sleep. ‖ *wi-ḥyaat raas ʕabuu-k fi-nomt-u* by your father's head in his grave (a conventional oath).

منام *manaam* /n/ **1** sleep. *fuqtⁱ min ɛizz il-manaam* I awoke from the depths of sleep. **2** sexual intercourse. *di kwayyisa fil-manaam* she's good in bed. — /pl *-aat*/ **3** dream. *ʃuftⁱ talat manamaat il-lelaa-di* I had three dreams last night.

منامة *manaama* /n pl *-aat*/ grave. *ʕinʃa-lla ʕaʃuuf fiikum yoom wiḥif ɋabl m-aḥuṭṭⁱ raas-i f-manamt-i* I hope to see you in misery before I die!

المنامة *ʕil-manaama* /prop n/ Manama, capital of Bahrain.

اتنام *ʕitnaam* /vi/ (impersonal) passive of *naam*. *da makaan ma-yitnam-fⁱ fii* that's a place not fit to be slept in. *ʕil-maʃruuɛ itnaam ɛalee* ≈ the project was left aside. - iva *mitnaam*.

نيّم *nayyim* /vt/ **1a** to cause to fall asleep, put to sleep (usually by natural means). *ʕis-suxuniyya nayyimit-ni* the heat made me fall asleep. **1b** to allow to sleep. *ʕil-waad mawguuɛ bi-snaan-u ma-bi-ynayyim-nii-ʃ ʕabadan* the boy's in pain with his teeth, and won't let me get any sleep. **1c** to put to bed. *ʕixsil wiff-a-ha ɋablⁱ ma tnayyim-ha* wash her face before you put her to bed! **2** to cause to lie down, lay down. *nayyim ik-kitaab ʕaḥsan yuɋaɛ* lay the book flat or it'll fall! **3** to cause a setback to. *ɋillit il-filuus nayyimit is-suuɋ* the scarcity of cash caused a market recession. *nayyimt il-ḥaala b-wiff-ak il-ɛikir* your ugly mug has jinxed things around here. **4** to take in, deceive. *baṭṭal tanyiim fil-xalɋ* stop trying to kid people! - vn *tanyiim*; ava/pva *minayyim*.

نوّم *nawwim* /vt/ to put to sleep (usually by artificial means). *gibtⁱ ḥububb tinawwim-ni* I got some pills to put me to sleep. ‖ *tanwiim maɤnaṭiisi* hypnosis. - vn *tanwiim*; ava *minawwim*.

منوّم *munawwim* /n/ **1** /pl *-aat*/ soporific, sleeping pill. **2** (also *munawwim maɤnaṭiisi*) /pl *munawwimiin*/ hypnotist.

اتنيّم *ʕitnayyim* /vi/ passive of *nayyim*. - iva *mitnayyim*.

اتنوّم *ʕitnawwim* /vi/ passive of *nawwim*. - iva *mitnawwim*.

استنيم *ʕistanyim* /vt/ to take advantage of (s.o. asleep). *ʕistanyimuu-ni w-saraɋu l-maḥfaẓa* they seized the opportunity of my being asleep and stole the wallet. - ava *mistanyim*.

استنوم *ʕistanwim* /vi/ to have a wet dream. - vn *ʕistinwaam*; ava *mistanwim*.

ن و ن

نون *nuun* /fem n, pl *-aat*/ twenty-fifth letter of the Arabic alphabet.

تنوين *tanwiin* /n/ *[gram]* nunation.

ن و ن و [1]

نونو *nawnaw* /vi/ to mew. *tiɛraf tinawnaw ɀayy il-ɋuṭṭa* can you mew like a cat? - vn *nawnawa*; ava *minawnaw*.

اتنونو *ʕitnawnaw* /vi/ (impersonal) passive of *nawnaw*. *laazim yitnawnaw lil-ɋuṭaṭ ɛaʃaan tiigi* the cats have to be mewed at to come. - iva *mitnawnaw*.

ن و ن و [2]

نونو *nuunu* **1** /n/ baby, toddler. **2** /adj invar/ tiny, teeny, weeny.

ن و ه

نوّه *nawwah, nawwihˆ* /vi/ to allude. *nawwih ɛan iz-zaɛal illi benhum wi-been baɛḍ* he alluded to the bad relations existing between them. - vn *tanwiih*; ava *minawwih*.

¶ *nawwah bi-* to praise.

ن و و [1]

نوّ *naww* /n/ light wind that blows down the Nile from the south.

نوّة *nawwa¹* /n pl *-aat*/ one of a number of high, often rain-bearing, winds that blow at regular intervals on the Mediterranean coast during the winter and spring. *nawwit raas is-sana* from 1st January for two days (westerly); *nawwit il-feeḍa k-kibiira* from 9th January for five days (south-westerly); *nawwit il-ɤuṭaas* from 18th January for five days (south-westerly); *ṇawwit ik-karm* from 27th January for six days (north-westerly); *nawwit baaɋi k-karm* from 3rd February for seven days (north-westerly); *nawwit iʃ-ʃams iṣ-ṣuɤayyara* from 14th February for two days (north-westerly); *nawwit is-salluum* from 4th March for three days (north-westerly); *nawwit il-ḥusuum* from 8th

March for two days (north-westerly or north-easterly); *nawwit baaqi l-ħusuum* from 14th March for two days (north-westerly); *nawwit if-fams ik-kibiira* from 22nd March for three days (westerly); *nawwit il-ɛawwa* from 29th March for three days (north-westerly); *nawwit baaqi l-ɛawwa* from 2nd April for two days (north-westerly); *nawwit il-muknisa* from 20th November for four days (north-westerly); *nawwit baaqi l-muknisa* from 26th November for two days (north-westerly); *nawwit qaasim* from 4th December for four days (south-westerly); *nawwit baaqi qaasim* from 10th December for two days (north-westerly); *nawwit il-feeda ʃ-ʃuvayyara* from 13th December for two days (north-westerly); *nawwit baaqi l-feeda* from 21st December for two days (south-westerly); *nawwıt ɛiid il-milaad* from 29th December for two days (north-westerly).

ن و و ² see ن و ى ²: *nawawi*

ن و ى ¹
نوى *nawa² (i)* **1** /vi and vt/ to decide, intend. *naweet ʕanzil* I decided to get down. *ʕilli nawyiin ɛaʃ-ʃeed* those intending to hunt. **2** /vt/ **2a** to vow (to undertake forthwith) a religious act. *naweet win-niyya li-llaah* here I vow (to do so-and-so) and vows are made to God (i.e., they cannot be made deceitfully). **2b** *[Isl]* to initiate (a prescribed religious act). *naweet iʃ-ʃiyaam* I have entered a state of fasting. - vn *niyya*; ava *naawi*; pva *manwi*.
نيّة *niyya* /n pl *-aat, nawaaya*/ intention. *saliim in-niyya* well-intentioned. *ʕil-ʕaɛmaal bin-niyyaat [prov]* (deeds are measured by intentions) it's the thought that counts. ‖ *ɛala nıyyaat-u* gullible. - *huwwa nawii-lak ɛala niyya* he's out to get you.

ن و ى ²
نوى *nawa³* /coll n/ pips, pits, kernels.
نواية *nawaaya* /unit n, pl *-aat*/ a pip, a pit, a kernel. ‖ *ʕin-nawaaya tisnid iz-ziir [prov]* (a pip may support a water-jar) ≈ important things may depend on paltry things.
نواة *nawaah* /n/ nucleus.
نووى *nawawı* /adj/ nuclear. *ʕınfıgaar nawawı* nuclear explosion.

ن و ي ³
نوّى *nawwa²* /vi/ to mew (of a cat). - vn *tanwiyya*; ava *minawwı*.

ن ى ا م
نيام *niyaam* <Dinka>: *niyaam niyaam* /coll n/ cannibals.

ن ى ء see ن ى ى

ن ى ب ¹ see ن ا ب: *naab'*

ن ى ب ² see ن و ب ¹: *niyaaba, naayib*

ن ى ح
ناح *naaħ² (i)* /vi/ to become ripe and ready to burst. *naqqi tiina nayħa w-hat-ha* pick a plump ripe fig and bring it. *bint' nayħa b-ʂaħiiħ* a dish of a girl. - vn *nayaħaan*; ava *naayiħ*.
نياح *niyaaħ↑* /vn/ death, dying.
اتنيّح *ʕitnayyaħ↑* /vi/ *[Chr]* to die. - ava *mutanayyiħ*.
المتنيّح *ʕil-mutanayyiħ* /n */ *[Chr]* polite form of reference to a dead person ≈ the departed.

ن ى ر ¹
نيرة *niira* /n pl *niyar*/ *[text]* heddle-wire.

ن ى ر ² see ن و ر ¹: *nayyir, niyyır, mustaniir*

ن ى ر و ز see ن ر و ز: *neeruuz*

ن ى ش
نيش *niʃ* <Fr> /n pl *-aat*/ niche.

ن ى ف ¹
نيفه *niifa* /n/ dish of grilled goat meat.

ن ى ف ² see ن و ف: *ʕin-niyaafa*

ن ى ك
ناك *naak (i)* /vt/ *[coarse]* to fuck. ‖ *ħ-aniik ʕafkaar-ak* I'm going to give you bloody hell! - vn *neek, niyaaka*; ava *naayik*; pva *manyuuk*.
نيكة *neeka* /inst n, pl *-aat*/ *[coarse]* a fuck.
اتناك *ʕitnaak* /vi/ *[coarse]* to be fucked. - iva *mitnaak*.
متناك *mitnaak* /n */ *[coarse]* passive homosexual, catamite, nance.
متناكة *mıtnaaka* /n pl *-aat*/ *[coarse]* whore, trollop. *ya-bn il-mitnaaka* you son of a whore!
نيّك *nayyik* /vt/ *[coarse]* to make, cause or allow (s.o.) to fuck. ‖ *nayyik (-u) n-namla [coarse]* to give (s.o.) a very hard time, give (s.o.) hell. - ava/pva *minayyik*.
اتنيّك *ʕitnayyık* /vi/ passive of *nayyik*. - iva *mıtnayyik*.

ن ى ك ل see ² ن ك ل : *neekal*

¹ ن ى ل
النيل *ʕin-niil* /prop n/ the Nile.
نيلى *niili* /adj/ **1** pertaining to the Nile. *samak niili* Nile fish. **2** *[agric]* irrigated by the Nile flood (of crops). *zarɛ' niili* summer crops.

² ن ى ل
نيلة *niila* /n/ **1** indigo. *ʕazraq zayy in-niila* as blue as indigo. **2** disaster (usually in a context of abuse). *gat-ak niila* or *ʕitnayyil bi-niila* ≈ go to hell! — /adj invar/ **3** lousy, rotten. *ɛarabiyyaat mustawaa-ha niila* cars in lousy condition.
نيّل *nayyil* /vt/ **1** to mess up, louse up. *ʕil-ħarb' nayyilit ħaal maṣr* war loused up conditions in Egypt. **2** *[coarse]* to fuck. — /vi/ **3** to be or become messed up or loused up. *ʕil-ħaal nayyil* the situation became lousy. - vn *tanyiil*; ava *minayyil*.
اتنيّل *ʕitnayyil* /vi/ **1** to get in a mess. *ʕitnayyilt' wi-tlabbiʃt* I got confused and too scared to do anything. *ʕil-masʕala tnayyilit xaaliṣ* the affair got completely messed up. **2** *[abus]* to go to hell, get lost. *ʕitnayyil ɛala ɛeen-ak* ≈ go to hell! - /commonly used as an intensifier/ *la twaẓẓaft' wala tnayyilt* ≈ I didn't get the bloody job or anything! *ma-titnayyil tiruuħ il-madrasa* why the hell don't you go to school! - ava *mitnayyil*.
متنيّل *mitnayyil* **1** /ava/ ‖*ya mitnayyil* or *ya mitnayyil bi-niila* or *ya mitnayyil ɛala ɛeen-ak* ≈ you miserable so-and-so! **2** /adj */ lousy, rotten. *ħaẓẓ-i mitnayyil* I have lousy luck. *ṣabaħt' mitnayyil* I got up feeling rotten.

ن ى ل ن
نايلون *naylun* (also *naylu↓*) <Engl> /n/ **1** nylon. ‖*kiis naylun* polythene bag. **2↓** neon. *lamba naylun* neon light.

ن ى ل و see ن ى ل ن : *naylu*

¹ ن ى م see ن و م : *naayim, nayyim, ʕitnayyim, ʕistanyim*

² ن ى م see ن ى ا م : *niyaam*

ن ى ن
نينة *neena* <T *nine* grandmother> /n pl *-aat*/ title of, and respectful form of address to, one's mother or any elderly female relative.

ن ى و ن
نيون *niyoon* <Engl> /n/ neon.

¹ ن ى ى
نىّ *nayy* /adj */ **1** raw, uncooked. *taaxud il-laħma n-nayya w-tufrum-ha* you take the raw meat and mince it. *ʕil-laħma lissa nayya* the meat is still (half) raw, the meat hasn't been cooked enough. ‖*beeḍ nuṣṣ' nayy* soft-boiled eggs. - *nayy' f-nayy [cook]* method of cooking by which meat and vegetables are put together raw in a pan and cooked with seasonings and water. **2** unripe. *ʕil-fakha di lissa nayya* this fruit isn't ripe yet. *xaʃab nayy* unseasoned timber. ‖*ṭuub nayy* sun-dried mud brick. **3** spineless, characterless (of people).

² ن ى ى see ¹ ن و ى : *niyya*

هـ

ه see ح: *ha-*

ه ا

ها *haa* /fem n, pl *-haat*/ twenty-sixth letter of the Arabic alphabet. - also *haaʕ, hih, heeh.*

ه ا ء

هاء *haaʕ* /fem n, pl *-aat*/ twenty-sixth letter of the Arabic alphabet. - also *haa, hih, heeh.*

ه ا ت

هات *haat* /imper, fem *haati*, pl *haatu*/ bring! fetch! *haat il-ʕarabiyya* get the car! *xud ḥisaab-ak wi-haat il-baaqi* take what you're owed and give back the change! ‖*haat ʃiid-ak* lend a hand! *- haat wi-xud* give and take. *- wi-haat(-ak) ya* phrase signalling (1) intensity of action, as in *ɣadoob il-ʕagal ʕadda l-xaṭṭ' wi-haat-ak ya zʕiiq* the wheels had barely swerved over the line when shouting started. (2) continuation of action, as in *qaʕadna nnakkit wi-haat ya taryaqa w-diḥk' w-fawaziir* we went on joking, and the mocking, laughing and riddles continued non-stop. *wi-haat ya daʕa ʕala l-fariiq it-taani* going on cursing the other team. *- haat (wara)* back up! *- haat (kamaan)* go on! continue!

ه ا ز

هذا *haaza*ˀ /fem *haazihi*ˀ/ **1** /demonst pron/ this, that. *min ʃagl' haaza* for this (or that) reason. **2** /demonst adj/ *wi-f-haazihi ẓ-ẓuruuf* and in these circumstances. - /in unelevated speech/ *li-ɣaayit waqt-i-na haaza* until this very moment.

هذها *haazúha*ˀ /demonst adj, invar/ *[joc, in films etc.]* this, that. *fi-haazúha s-saaʕa kunt' naayim* I was asleep at that time (of the day). *ḥ-aaxud ʃagazt-i f-haazúha l-yoom* I'll take my holiday on that day.

ه ا ك ز ا

هكذا *haakaza* (also *hakáza*): *wi-haakaza* and so on, and so forth.

ه ا ل

هالة *haala* /n pl *-aat*/ halo. ‖*ʕen-ha ḥawaleeha halaat* she has rings around her eyes.

ه ا ن م

هانم *haanim* <T *hanım*> /n pl *hawaanim*/ title of, and respectful term of address or reference to, a lady. *ya (sitt') haanim* madam. *samiira haanim* Madame Samira.

هوانمى *hawanmi* /adj invar/ feminine, delicate, unmanly. *sagaayir hawanmi* small cigarettes. *ʃidee hawanmi* he has hands like a woman's. *kalaam-u hawanmi* he talks like a woman.

ه ا ى

هاى *haay* <Engl *high*> /adj invar/ upper-class. *ʃiftakaruu-ni haay* they thought me upper-class. *dool naas haay* those are upper-class people.

ه ه ء

هاهأ *haʃhaʃ, haʃhaʃ* /vi/ to laugh. -vn *haʃhaʃa, haʃhaʃa*; ava *mihaʃhaʃ, mihaʃhaʃ*.

ه ب see و ه ب: *hiba*

ه ب ب ١

هبّ *habb'* *(i)* /vi/ **1** to leap up, spring, start. *ʃin-naar habbit* the fire flared up. *ʃil-ʕaraq habbᵃ ʕalayya* I broke out into a sweat. *ʃir-raagil habb' fiyya w-ṭaradni* the man sprang up at me and threw me out. ‖*kull' min habb' w-dabb* ≈ every Tom, Dick and Harry. **2** to

blow (of wind). *ʃin-nisma lamma habbit ḥasseet bin-noom* I felt sleepy when the breeze blew. - vn *habb, hababaan*; ava *haabib*.

هبّ *habb*[2]*: habb*[i] *gaẓam* all of a sudden, at once and unexpectedly. *wi-raaḥ miṛayyar raʃy-u kida habb*[i] *gaẓam* all at once he changed his mind.

ه ب ب[2]

هباب *hibaab* /n/ **1** soot. ‖ *ẓayy il-hibaab* bad, lousy, as in *ḥalt-u ẓayy il-hibaab* he's in lousy shape, *fort-ak illi ẓayy il-hibaab* your rotten advice. **2** *[deris]* damned thing, something not liked. *ʃil-hibaab illi b-yifrab-u* the filthy stuff he drinks. *feen si hbaab bitaɛ-kum* where is your lousy Mr. So-and-So?

هبابة *hibaaba* /n/ **1** a speck of soot. **2** *[deris]* damned thing, something not liked.

هبّب *habbib* /vt/ **1** to mark with soot. *ʃil-wabuur habbib il-ḥalla* the primus stove has sooted the pot. **2** to do (e.g., a job of work) badly, botch up. *ʃeeh illi bi-thabbib-u da* ≈ what the hell are you messing about at? - vn *tahbiib*; ava/pva *mihabbib*.

مهبّب *mihabbib* /adj */ bad, lousy. *ɛiiʃa mhabbiba* a rotten life. *yoom mihabbib* a botched up day, an unlucky day. *kalaam mihabbib* smutty talk, nasty words. *ʃamma ḥittit ʃoora mhabbiba* what a lousy piece of advice!

اتهبّب *ʃithabbib* /vi/ **1** to be marked with soot. **2** to be botched up. - iva *mithabbib*.

ه ب ب[3]

هوبّ *hubb* <perh Copt> /interj/ **1** heave! heave ho! (cf *heela hubb, heela hubba*). **2** expletive expressing suddenness. *lammit il-huduum wi-hubb*[i] *ʃaylaa-ha ɛala beet ʃumm-a-ha* she gathered the clothes together and carried them off to her mother's house. ‖ *wi-hubb*[i] *ʈubb* without ado, there and then, as in *lissa b-aquul taɛaalu zuruu-na baṣṣeet hubb*[i] *ʈubb laqet-hum ɛandi fil-beet* no sooner had I told them to visit us than there I found them at my place. **3** *[children]* carry (me)! ups-a-daisy!

هبّه *hubba* = *hubb* 1 and 3. - also *ʃubba, ʃabbah*.

ه ب د

هبد *habad (i)* /vt/ **1** to slam, bang. *ʃaal il-koora w-habad-ha fil-ʃarḍ* he picked up the ball and slammed it to the ground. **2** to deal (a hard blow) to. *habadt-u ɋalameen* I gave him a hard slapping. **3** to wolf down, knock back (food or drink). *raaḥ haabid farxa b-ḥal-ha* he knocked back a whole chicken. **4** *[coarse]* to copulate with, bang. - vn *habd*; ava *haabid, mahbuud*.

هبدة *habda* /pl *-aat*/ instance noun of *habd*.

اتهبد *ʃithabad* /vi/ **1** passive of *habad*. **2** to crash, slam. ‖ *ʃitfaal wi-thabad* to create a great fuss, as in *mif ḥa-taaxud wala malliim ziyaada lamma titfaal wi-tithibid* you're not going to get another millime however much fuss you make! - ava/iva *mithibid*.

انهبد *ʃinhabad* = *ʃithabad*. - ava/iva *minhibid*.

ه ب ر

هبر *habar (u)* /vt/ **1** to bite off, grab (a large chunk). *ʃik-kalb*[i] *habar-u f-rigl-u* the dog took a chunk out of his leg. **2** to take and not return, pocket. *habaru l-wallaaɛa* they took the lighter and never gave it back. *ʃil-bayyaaɛ habar minni xamsa gneeh* the salesman took me for five pounds. **3** to deal (a blow) to. *habart-u kaffa ɛala ɋafaa* I dealt him a slap on the back of his neck. - vn *habr, habaraan*; ava *haabir*; pva *mahbuur*.

¶ *habar fi-* to grab at, clutch at. *habarit fi-faɛr-u* she grabbed at his hair.

هبرة *habra* /n, pl *-aat, hubar*/ chunk, hunk (particularly of meat).

اتهبر *ʃithabar* /vi/ passive of *habar*. - iva *mithibir*.

انهبر *ʃinhabar* = *ʃithabar*. - iva *minhibir*.

هابر *haabir* /vi/ **1** to tinker, tamper. *ma-thabir-ʃ*[i] *fir-radyu* don't tamper with the radio. *ma-luu-ʃ fuṛla ṛeer il-mihabra ʈuul in-nahaar* he has nothing to do except potter around all day long. **2** to struggle, strain, exert effort. *bi-yhaabir ɛafaan luqmit il-ɛeef* he struggles to earn his daily bread. - vn *mihabra*; ava *mihaabir*.

اتهابر *ʃithaabir* /vi/ (impersonal) passive of *haabir*. *ʃit-tilifizyon-da mithaabir fii* this television has been tampered with. - iva *mithaabir*.

ه ب ش

هبش *habaʃ (i)* /vt/ **1** to scratch, claw. *ʃil-quʈʈa habaʃit-ni* the cat scratched me. **2** to take and not return, pocket. **3** to deal (a blow, etc.). *habaʃit-ni ɋalam suxn* she gave me a stinging slap. - vn *habʃ, habaʃaan*; ava *haabiʃ*; pva *mahbuuʃ*.

¶ *habaʃ fi-* to flare up at, snap at. *ma-ḥadd*[i] *-ʃ yikallim-ak ʃilla ma tihbiʃ fii* no one can speak to you without your snapping at him.

هبشة *habʃa* /pl *-aat*/ instance noun of *habʃ*.

هبّاش *habbaaʃ* /n */ **1** scratcher. **2** grabber.

اتهبش *ʃithabaʃ* /vi/ **1** to be scratched, be clawed. **2** to be dealt (a blow). - iva *mithibiʃ*.

انهبش *ʃinhabaʃ* = *ʃithabaʃ*. - iva *minhibiʃ*.

هبّش *habbiʃ* **1** /vt/ to grab at, snatch at. *ma-tuqɛud-ʃ*[i] *thabbiʃ fil-ʃakl* don't keep grabbing at the food! **2** /vi/ to speak abruptly. *kalaam-u kull-u tahbiiʃ* everything he

says is short and sharp. - vn *tahbiif*; ava/pva *mihabbif*.
مهبّشاتي *mihabbifaati* /n pl *-yya*/ snapper-up (of money), shark.
اتهبّس *ʔithabbif* /vi/ to be grabbed at, be snatched at. - iva *mithabbif*.
هابس *haabif* /vi/ **1** to stretch to reach, reach out. *ʔil-ɛayyil bi-yhaabif ɛal-liɛba illi fooq iṭ-ṭarabeeza* the child is stretching to get the toy on the table. **2** to struggle, strain (to do s.th.). *faayif ik-kitaaba mhabfa* I can hardly make out the writing. - vn *mihabfa*; ava *mihaabif*.

ه ب ط

هبط *habaṭ (u)* **1** /vi/ to come down, descend. *ʔiṭ-ṭayyaara habaṭit* (1) the plane lost height. (2) the plane landed. *ʔil-ʔasɛaar habaṭit* prices dropped. **2** /vt/ to deal (a blow or the like) to. - vn *hubuuṭ, habaṭaan*; ava *haabiṭ*.
هبط *hibiṭ (a)* /vi/ to tire, lose one's energy. *ʔinta b-tihbaṭ bi-surɛa kida leeh* why do you become tired so quickly? - vn *habaṭaan*; ava *habṭaan*.
هبوط *hubuuṭ* /n/ **1** descent, fall, drop. *hubuuṭ iḍṭiraari* emergency landing, crash landing. **2** physical exhaustion, weakness. *ʔana ḥaasis bi-hubuuṭ fidiid* I feel utterly exhausted. *hubuuṭ fil-ɋalb* heart failure. **3** lowering. *hubuuṭ ir-raḥim [path]* prolapse of the uterus.
هبّط *habbaṭ* /vt/ **1** to lower, reduce. *habbaṭ is-surɛa* he reduced the speed. *ʔil-marwaḥa habbaṭit daragit il-ḥaraara fwayya* the fan has lowered the temperature a bit. **2** to calm down, subdue. *habbaṭuu ɛafaan yuskut* get him to simmer down so that he'll be quiet! - vn *tahbiiṭ*; ava/pva *mihabbaṭ*.
اتهبّط *ʔithabbaṭ* /vi/ **1** to be lowered, be reduced. **2** to be calmed down, be subdued. - iva *mithabbaṭ*.

ه ب ل ¹

هبل *habal¹ (i)* /vt/ to drive (s.o.) out of his wits, drive insane. *ʔil-bint habalit-u* the girl drove him off his head. - vn *habal, habalaan*; ava *haabil*; pva *mahbuul*.
هبل *habal²* /n/ silliness, stupidity.
مهبول *mahbuul* /adj pl *mahabiil*/ crazy.
هبالة *habaala* /n/ simplicity, foolishness. ‖*saayiɋ il-habaala ɛal-ɛabaaṭa* acting the complete fool.
هبيل *habiil* /adj pl *hubala*/ silly, simple-minded, stupid.
أهبل *ʔahbal* /adj, fem *habla*, pl *hubl, hibl*/ silly, simple-minded. *ʔibn il-habla yɛiif ʔaktar [prov]* (the son of the foolish woman lives longer) it doesn't pay to try to be clever and finicky. ‖ *ʔil-ɛaayiz ʔahbal* necessity knows no law.

هبلى *habulli* /adj invar/ haphazard, disorganized. *ɛiiʃa habulli* an aimless existence. *raagil habulli* disorganized and unthinking man. *bil-habulli* in a haphazard and unpremeditated manner, thoughtlessly, as in *ɛaayif kida bil-habulli* he just takes life as it comes.
اتهبل *ʔithabal* /vi/ to be driven out of one's wits, become crazy. - ava/iva *mithibil*.
انهبل *ʔinhabal* = *ʔithabal*. - ava/iva *minhibil*.
هبّل *habbil* /vi/ to shout as if crazed. - vn *tahbiil*; ava *mihabbil*.
اتهابل *ʔithaabil* /vi/ to act the fool. - ava *mithaabil*.
استهبل *ʔistahbil* **1** /vt/ to take for a fool, treat as a fool. *ʔistahbil-ni w-xad il-ɛarabiyya rxiṣa* he put one over on me and got the car cheap. **2** /vi/ to play the fool. *ma-ḥadd-ʃ fiikum fakr-u walla b-tistahbilu* doesn't anyone remember him or are you just acting stupid? - vn *ʔistihbaal*; ava *mistahbil*.

ه ب ل ²

مهبل *mihbal* /n pl *mahaabil*/ vagina.
مهبلي *mihbali* /adj/ vaginal.

ه ب ل ³

هبل *habal³* /n/ bone-setting as practised by experienced but medically unqualified people. *bituuɛ il-habal* bone-setters. *ʔabu habal* bone-setter.

ه ب ه ب ¹

هبهب *habhab* /vi/ to bark (of a dog). ‖ *ʔil-kalb lamma yhabhab* (or *yhabhib*) *ma-ḥadd-ʃ yirudd-a ɛalee [prov]* (no-one answers a dog when it barks) ≈ there's no point in responding to insult. - vn *habhaba*; ava *mihabhab, mihabhib*.

ه ب ه ب ²

هبهب *hubhub* /n/ liquor concocted from palm juice and methylated spirits.

ه ب و

هبو *habw* /coll n/ **1** swirls (of particles, soot etc.). *ʔil-wabuur ɛamal habw* the primus stove made swirls (of soot). ‖*habw il-ɋuṭn* fine flecks of cotton which accumulate in a cotton gin during processing. - (*ḥafiif*) *habw* fine quality hashish. **2** blasts (of hot air, from a fire etc.).
هبوة *habwa* /unit n, pl *-aat*/ **1** a swirl (of particles, soot etc.). **2** fine quality hashish. **3** a blast (of hot air, from a fire).

ه ب ى

هبى *hibi (a)* /vi/ to become weak with hunger. - vn *habayaan*; ava *habyaan*.

ه ب ى ك

هبيك *habyak* <T *hep yek*> /n/ pair of ones (in backgammon).

ه ت ت

هتّ *hatt (i)* /vt/ to cause to flinch, intimidate. *ʕana baṣṣa waḥda minni thitt-u* one glance from me is enough to make him flinch. ‖*bint' thitt* ≈ a stunning girl. - vn *hatt, hatataan*; ava *haatit*; pva *mahtuut*.

¶ *hatt' fi-* to snap at, burst out at. - *hatt" ɛala* to attempt to frighten (s.o.). *hitt" ɛal-waad bi-kilmiteen xallii yzaakir* do threaten the boy into studying (his lesson).

هتّة *hatta* /pl *-aat*/ instance noun of *hatt*.

اهتّ *ʕithatt* /vi/ **1** to be made to flinch, be intimidated. **2** (impersonal) passive of *hatt*. *miʃ ʕana lli yithatt' fii* I am not one to be intimidated. - iva *mithatt*.

هتّت *hattit* /vt/ to scare with (exaggerated) threats. *dayman yihattit-ha biṭ-ṭalaaq* he always scares her by hinting that he may divorce her. - vn *tahtiit*; ava *mihattit*.

اهتّت *ʕithattit* /vi/ to flinch, be made to flinch, be scared. - ava/iva *mithattit*.

ه ت ر

هاتر *haatir* /vi/ to engage in a war of words, get into a slanging match. *bi-yhatru maɛa baɛḍ" ɛal-faaḍi* they are abusing one another for no serious reason. - vn *mihatra*; ava *mihaatir*.

مهاترة *muhatra* /n pl *muhatraat*/ slanging match, battle of words. *ma-ybaṭṭaluu-ʃ muhatraat maɛa baɛḍ* they never stop wrangling with one another.

استهتر *ʕistahtar* /vi/ to underrate, take lightly. *huwwa mistahtar bil-maxaaṭir* he underestimates the dangers. *ɢaɛadt' tistahtar fii li-ḥadd' ma ḍarab-ak maɢlab* you went on underestimating him until he finally conned you. *ʕilli tistahtar-bu yiɤlib-ak [prov]* what you underestimate will gain domination over you. - vn *ʕistihtaar*; ava *mistahtar, mustahtir↑*.

مستهتر *mustahtir↑* /adj */ careless, heedless, reckless. ‖*bint'* (or *mara) mustahtira* a loose girl (or woman).

ه ت ش

هتش *hataʃ (i)* /vi/ to tell a tall story, shoot a line. *ɛumr-u ma-ybaṭṭal hatʃ* he never stops telling his fisherman's tales. - vn *hatʃ, hataʃaan*; ava *haatiʃ*; pva *mahtuuʃ*.

هتش *hatʃa* /n, pl *-aat*/ a tall story, a fisherman's tale.

هتّاش *hattaaʃ* /adj */ given to telling tall stories. *ma-tsaddaɢ-haa-ʃ di hattaaʃa* don't believe her; she's a fibber.

ه ت ف

هتف *hataf (i)* /vi/ to shout a slogan, cheer. *ʃin-naas hatafit bi-suɢuuṭ iz-ẓulm* the people clamoured for the fall of injustice. - vn *hitaaf, hatafaan*; ava *haatif*.

¶ *hataf li-(..)* to lead (s.o.) to act intuitively. *hataf lina haatif* (or *ḥaaga hatafit-lina) ʃinnina nɢuum nirawwaḥ* something prompted us to get up and go home.

هتاف *hitaaf* /n pl *-aat*/ shouted slogan, shout, cheer.

هتافجيّة *hitafgiyya* /pl n/ = *hattiifa*.

هاتف *haatif* /n pl *hawaatif*/ voice from the unknown. *hataf-li haatif* I had a sudden inspiration.

هتّاف *hattaaf* = *hattiif*.

هتّيف *hattiif* /n * and pl *hattiifa*/ yes-man, hanger-on, drummer-up of support.

اتهتف *ʕithataf* /vi/ (impersonal) passive of *hataf*. *ʕahu da z-zaɛiim illi yithitif bi-sm-u f-kull' makaan* this is the leader whose name is applauded everywhere. - iva *mithitif*.

ه ت ك

هتك *hatak (i)* /vt/ to expose, reveal. *hatak satr* (or *sitr*) to reveal a secret of (s.o. or s.th.), betray. *ʕallaah yihtik sitr-u zayy' ma b-yihtiḳ sitr in-naas* may God expose him (to humiliation) just as he exposes others. *hatak ɛarḍ-* to dishonour sexually, abuse sexually. - vn *hatk, hatakaan*; ava *haatik*; pva *mahtuuk*.

مهتوكة *mahtuuka* /n pl *mahatiik*/ whore, woman of easy virtue.

هتيكة *hatiika* /n pl *hataayik*/ scandal, disgrace.

اتهتك *ʕithatak* /vi/ passive of *hatak*. - iva *mithitik*.

انهتك *ʕinhatak* = *ʕithatak*. - iva *minhitik*.

هتّك *hattik* /vt/ to rip up, tear open. *ʕir-ruṣaaṣa hattikit laḥm' wirk-u* the bullet tore open his thigh. ‖*hattiku l-ʕaɛraaḍ* they ravished the womenfolk. - *maẓag-ha thattik ʕastaar xalɢ illaah* it's a hobby of hers to expose people's secrets. - vn *tahtiik*; ava/pva *mihattik*.

مهتّكة *mihattika* = *mahtuuka*.

انهتّك *ʕithattik* /vi/ **1** passive of *hattik*. **2** to split open (particularly of flesh). **3** to become morally lax. - vn *tahattuk*; ava/iva *mithattik*.

نهتّك *tahattuk* /n pl *-aat*/ tear in the flesh, gash.

مستهتك *mistahtik* /adj */ unchaste, licentious, immoral.

ه ت م

هتم *hatam* /n/ toothlessness.

أهتم *ʔahtam* /adj, fem *hatma*, pl *hutm*/ toothless.

اتهتم *ʕithatam* /vi/ **1** to lose one's teeth (especially the

front teeth). 2 to fall out, be knocked or pulled out (of teeth). - ava/iva *mithitim*.

ه ت ه ت

اهتهت *ʔil-hathat* /n/ epithet for the unknown disaster. *ʔin ʃa-llaɂ yaxd-ak il-hathat* the Devil take you!

اهتهات *ʔil-hithaat* = *ʔil-hathat*.

ه ت و ر

هاتور *hatuur, hatuur* <Copt> /n/ the third month of the Coptic year (early November to early December). *hatuur ʔabu d-dahab il-mantuur* Hatur (the month) of scattered gold (allusion to the sowing of wheat).

ه ت ى

هاتى *haata* /vi/ to repeat incessantly. *ɛammaal yihaati b-talaata saaɤ ya ɋuuɫa - laakin ma-ħadd'-ʃ ɛaayiz yiftiri* he keeps shouting 'Tomatoes for three piastres!' but no-one wants to buy. ‖*lamma yhaati* (not) even if (he) keeps on and on about it, as in *miʃ ħa-taaxud il-filuus lamma thaati* you won't see the money even if you scream for it. - vn *mihatiyya*; ava *mihaati*.

ه ج ا see ه ج ى: *higa*

ه ج ج

هجّ *hagg (i)* /vi/ to get out, quit (in exasperation). *haggeet mil-balad* I cleared out of town. *ʔin-naas bi-thigg' min ħarr' maṣr' fiṣ-ṣeef* people flee the heat of Cairo in the summer. - vn *hagg, hagagaan*; ava *haagig*.

هجّة *hagga* /pl *-aat*/ instance noun of *hagg*.

مهجّ *mihagg* /n pl *-aat*/ *[rur]* deep circular niche in a wall (for storage, or to take the tongue of a wooden lock).

هجّج *haggig* /vt/ to drive out, cause to quit (in exasperation or despair). - vn *tahgiig*; ava/pva *mihaggig*.

اتهجّج *ʔithaggig* /vi/ passive of *haggig*. - iva *mithaggig*.

ه ج د

اتهجّد *ʔithaggid* /vi/ *[Isl]* to spend time late at night in prayer. - vn *tahaggud*; ava *mithaggid*.

ه ج ر

هجر *hagar (u)* /vt/ to desert, abandon. *miraat-u hagarit-u* his wife deserted him. - vn *hagr, hagr, hugraan, higraan*; ava *haagir*; pva *mahguur*.

مهجور *mahguur* /adj/ deserted, abandoned. *kalimaat mahguura*† obsolete words. *beet mahguur* a deserted house. *ʔayy' makaan mahguur* any deserted place. *ʔil-ħabiib il-mahguur* the deserted lover.

هجرة *higra* /n/ 1 migration. *higrit iṭ-ṭuyuur* bird migration. 2 *ʔil-higra* the Hegira, the migration from Mecca to Medina by the Prophet Muhammad.

هجرى *higri* /adj/ relating to the Hegira. *sana higriyya* a year of the Muslim calendar.

مهجر *mahgar* /n/ place of emigration (particularly with regard to Arab migrants to the Americas).

اتهجر *ʔithagar* /vi/ to be deserted, abandoned. - iva *mithigir*.

انهجر *ʔinhagar* = *ʔithagar*.

هجّر *haggar* /vt/ to evacuate (people). - vn *tahgiir*; ava *mihaggar*; pva *muhaggar*.

مهجّر *muhaggar* /n */ forced emigrant.

اتهجّر *ʔithaggar* /vi/ to be evacuated (of people). *fi-ʔayyaam il-ħarb' sukkaan il-mudun bi-yithaggaru lir-riif* during the war city-dwellers are evacuated to the countryside. - iva *mithaggar*.

هاجر *haagir, haagar* /vi/ to migrate, emigrate. *ṭuyuur mihagra* migratory birds. - vn *mihagra, muhagra*; ava *mihaagir*.

مهاجر *muhaagir* /n */ migrant, emigrant, immigrant.

ه ج س

هاجس *haagis* /n pl *hawaagis*/ sudden and troubling idea. *gaa-ni haagis* I was struck by an unsettling thought. *raagil malyaan hawaagis* a man beset by worries.

ه ج ص

هجص *hagaṣ (u)* /vi/ *[deris]* to make false boasts or claims. *hagaṣ ɛaleehum wi-xad il-filuus* he took them in with false promises and got hold of the money. - vn *hagṣ*; ava *haagiṣ*.

هجص *hagṣ* /n/ *[abus]* false boasting, bragging.

أهجص *ʔahgaṣ* /el/ *[abus]* more/most bragging or boasting.

هجّاص *haggaaṣ* <pèrh Copt> /n * and pl *haggaaṣa*/ *[abus]* one given to false boasting, braggart, loudmouth.

هجّص *haggaṣ* /vi/ *[deris]* to tell boasting lies, brag. *miʃ faaliħ ɤeer ʔinnu yuɋɛud ɛala l-ɋahwa ṭuul in-nahaar yihaggaṣ ɛala ʔaṣħaab-u* all he's good for is sitting in the café all day long giving his friends all kinds of spiel. - vn *tahgiiṣ*; ava *mihaggaṣ*.

ه ج ع

هجع *hagaɛ (a)* /vi/ to become calm, quiet and still. - vn *huguuɛ, hagaɛaan*; ava *haagiɛ*.

هجعة *hagɛa* /inst n/ a slumber, a snooze. *ruuħ maddid*

taḥt iſ-ſagara w-xud-lak hagɛa go and lie under the tree and enjoy a sleep.

ه ج م

هجم *hagam (i)* /vi/ to make an assault, charge. *ſin-naas hagamit ɛal-gamɛiyya ſawwil ma fataḥit* the people stormed the co-operative store as soon as it opened. - vn *hugum, hagamaan*; ava *haagim*.

هجوم *huguum* /n pl *-aat*/ attack, offensive. *huguum muḍaadd* counter-attack. *huguum gawwi* air raid. *ɛalb il-huguum [sport]* centre forward. *xaṭṭ il-huguum [sport]* forward line.

هجومى *huguumi* /adj/ offensive, attacking.

هجمة *hagma* /n pl *-aat*/ raid, attack.

اتهجم ، *ſithagam* /vi/ (impersonal) passive of *hagam*. *ma-yithigim-ſ' ɛalee bi-shuula* he is not easily attacked. - iva *mithigim*.

انهجم *ſinhagam* = *ſithagam*. - iva *minhigim*.

اتهجّم *ſithaggim* /vi/ to launch an attack, make an assault. *ſithaggim ɛalayya b-kursi* he went for me with a chair. *ſig-garaayid ithaggimit ɛalee* the newspapers attacked him. - vn *tahaggum*↑; ava *mithaggim*.

هاجم *haagim* /vt/ to attack, assault. *ſil-fariiq bi-yhaagim b-arbaɛt infaar* the team attacks with four persons. - vn *mihagma, muhagma*; ava *mihaagim*.

مهاجمة *muhagma* /n pl *-aat*/ = *huguum*.

مهاجم *muhaagim* /n */ *[sport]* forward, attacker.

اتهاجم *ſithaagim* /vi/ to be attacked, be assaulted, be raided. - iva *mithaagim*.

ه ج ن

هجين *hagiin* **1** /adj invar/ hybrid (particularly with a father of good stock and a mother of poor stock). **2** /coll n, pl *hign*/ racing camel(s), dromedaries.

هجّان *haggaan* /n pl *haggaana*/ **1** cameleer. **2** *ſil-haggaana* /pl n/ the Camel Corps.

هجّن *haggin* **1** /vt/ to cross-breed, hybridize. *firaax mihaggina* hybrid chickens. **2** /vi/ to walk like a camel. *fuuf ſizzaay bi-thaggin fil-maſy* see how she sways clumsily like a camel. - vn *tahgiin*; ava/pva *mihaggin*.

ه ج ى

هجا، هجاء *higa* = *higaaya*. *ḥuruuf il-higa* the alphabet, the letters of the alphabet.

هجايه *higaaya* /n/ spelling.

هجائى *higaaſi* /adj/ alphabetical.

اتهجّى *ſithagga* /vt/ to spell. - vn *tahgiyya* ava/pva *mithaggi*.

استهجّى *ſistahagga* /vt/ to spell. *mif ɛaarif yistahagga ſism-u* he doesn't know how to spell his name. ‖ *lissa b-yistahagga* to be still at the initial stages, be still a beginner, as in *ſana lissa b-astahagga fis-siwaaɛa* I've just started learning to drive. - ava *mistahaggi*.

ه د ء see ³ ه د ى

ه د ب

هدب *hidb* /n/ **1** /pl *hadadiib*/ fringe. **2**↑ /pl *ſahdaab*/ eyelash.

¹ ه د د

هدّ *hadd (i)* /vt/ **1** to demolish, wreck. **2** to undermine, weaken. *ſil-ḥuzn" hadd-a-ha* sorrow has ruined her health. *bi-yhidd il-ḥeel* it saps one's strength. - vn *hadd, hadad, hadadaan*; ava *haadid*; pva *mahduud*.

اتهدّ *ſithadd* /vi/ **1** to be demolished, be wrecked. **2** to be undermined, be weakened. - iva *mithadd*.

انهدّ *ſinhadd* = *ſithadd*. - iva *minhadd*.

هدّد *haddid* /vt/ to threaten. *ſil-mudiir haddid-hum bil-xaṣm* the director threatened to dock their pay. - vn *tahdiid*; ava/pva *mihaddid*; pva *muhaddad*↑.

تهديد *tahdiid* /n pl *-aat*/ threat.

تهديدى *tahdiidi* /adj/ threatening.

اتهدّد *ſithaddid* /vi/ **1** to be threatened. *yaama ktiir ithaddidu bil-ɛatl* how many times they've been threatened with death! **2** to be intimidated, be cowed. *ſana m-athaddid-ſ' min ḥadd* I'm not scared by anyone! - iva *mithaddid*.

² ه د د

هدّ *hidd* <Engl> /n pl *-aat*/ **1** record-player pick-up head. **2a** *[soccer]* play made with the head. **2b** blow with the head (in wrestling).

¹ ه د ر

هدر *hadar¹ (u)* /vt/ **1** to cause to fall, knock over. *hadart-u ɛal-ſarḍ* I knocked him to the ground. **2** to shed (blood) with impunity. - vn *hadr*; ava *haadir*; pva *mahduur*.

هدر *hudr* /n/ bad fall. *kalt' hudr* I took a tumble.

هدر *hadar²* /coll n/ scraps, left-overs, unwanted remnants. *hadar gild* scraps of leather. -/adjectivally/ *damm-u hadar* his blood may be shed with impunity, he's so insignificant no one would avenge his blood. -/adverbially/ *raaḥ hadar* to be wasted, come to nothing, as in *damm-u raaḥ hadar* his blood was shed in vain, *ḥaqq-i ma-yruḥ-ſ' hadar* no one's going to trample on my rights!

انهدر ʔithadar /vi/ **1** to tumble, fall down. **2** to be shed with impunity (of blood). - ava/iva *mithidir*.
انهدر ʔinhadar = ʔithadar. - ava/iva *minhidir*.
أهدر ʔahdar[1] /vt/ to invalidate, regard as invalid. *ʔihdaar ḥuquuq in-naas* transgression of the rights of the people. - vn *ʔihdaar*; ava *muhdir, mihdir*; pva *muhdar*.

² ه د ر
هدر hadar[3] *(u)* /vi/ to roar, bellow. *bi-yuhdur zayy il-baḥr* he's bellowing with rage - vn *hadiir*; ava *haadir*.

³ ه د ر
هدره hıdra /n pl *hidar, hidaar*/ bottom section of a rib (that part which forms the bottom of a wooden ship).

- ه د ر ل
هيدروليكى *hidruliiki* <Fr> /adj/ hydraulic.

- ه د ر م
هدروماتك *hıdrumaatik* /n/ *[auto]* automatic transmission.

ه د ف
هدف hadaf /n pl *ʔahdaaf*/ **1** target. *ʔiṭ-ṭalqa ma-gat-ʃ' fil-hadaf* the shot missed the target. **2** aim, objective. *hadaf il-liʕba ʔeeh* what is the object of the game? *hadaf il-mafruuʕ* the aim of the project. **3** *[sport]* goal (scored).
هدّاف haddaaf /n pl *haddaafa*/ **1** (also *haddaaf il-fariiq*) scorer or top scorer (in a team game). **2** bombardier.
هدّف haddif /vi/ *[sport]* to aim (well) at the goal, basket etc. *ʔil-laaʕıb da bı-yhaddif bi-ḥarfana* ≈ this player is an expert scorer. - vn *tahdıf*; ava *mihaddif*.
استهدف ʔıstahdif[1] /vt/ to select as a target. *ʔinta b-ıstahdıf-nı bık-kalam-da* do you mean that remark for me? - vn *ʔıstıhdaaf*; ava *mıstahdıf*.

¹ ه د ل
هدل hadal *(ı)* /vt/ **1** to let down, let hang, dangle. *hadalit faʕr-a-ha* she let down her hair. **2** to cut or chop down. *ʔihdıl ḥıtta kbıra mın ıg-gısr* cut down a large section of the bank. - vn *hadl, hadalaan*; ava *haadil*; pva *mahduul*.
هدله hadla /pl *-aat*/ instance noun of *hadl*.
اهدل ʔithadal /vi/ passive of *hadal*. - iva *mıthidil*.
انهدل ʔinhadal = ʔithadal. - iva *mınhidil*.
هدّل haddıl /vt/ **1** to let down, allow to hang loosely. *labsa fustaan mıhaddil ʕaleeha ka-ʔinnu mif bitaʕ-ha* she is wearing a dress so loose on her that it seems it may not be her own. **2** to cut or chop down repeatedly. *ʔit-turaab mihaddil fil-ḥufra* the earth has been cut away and is collapsing into the hole. - vn *tahdiil*; ava/pva *mihaddil*.
اتهدّل ʔithaddil /vi/ passive of *haddil*. - vn *tahaddul*; iva *mithaddil*.

² ه د ل
هديل hadıil /n/ cooing (of pigeons).

¹ ه د م
هدم hadam[1] *(ı)* /vt/ to destroy, demolish. *ʔil-ḥarıiqa hadamıt il-beet* the fire destroyed the house. ‖ *haadim il-lazzaat* death. - vn *hadm, hadamaan*; ava *haadim*; pva *mahduum*.
هدّام haddaam /adj/ destructive. *naqd' haddaam* destructive criticism.
اهدم ʔithadam /vi/ to be destroyed, be demolished, fall into ruin. - ava/iva *mıthidim*.
انهدم ʔınhadam = ʔithadam. - vn *ʔinhidaam*; ava/iva *minhidim*.
هدّم haddim /vt/ to destroy successively and extensively. *ʔil-ɣaara haddimit muʕẓam il-mabaanı* the raid has destroyed most of the buildings. - vn *tahdiim*; ava/pva *mihaddim*.
اهدّم ʔithaddim /vi/ to be successively and extensively destroyed. - iva *mithaddim*.

² ه د م
هدمه hidma /n pl *-aat, hıdam*/ garment, piece of clothing. *xad il-hidma lli ʕalayya* ≈ he took even the shirt off my back.
هدوم huduum, hiduum /pl n/ clothes, clothing. ‖ *raagil malw' hduum-u* a respected man. *-fi-nuṣṣ' hduum-u* extremely embarrassed.

ه د ن
هدنة hudna /n pl *-aat*/ truce, armistice.

ه د ه د
هدهد hudhud, hidhid /n pl *hadaahid*/ *[zool]* hoopoe.

¹ ه د ى
هدى hada[1] *(ı)* /vt/ to guide, set on the right path (of God). *b-adʕi-lha ʔinn' rabb-i-na yihdii-ha* I pray that our Lord may guide her. *rabb-i-na yihdii-k* may our Lord guide you on the right path (often said in criticism). ‖ *yihdii-k yirḍii-k* see *raḍa*. - vn *huda, hidaaya*; ava *haadi*; pva *mahdi*.

هادى *haadi¹* /n/ Guider, as epithet of (1) God. ‖*lissa bi-yquul ya haadi* he's just getting started, he's just warming up. (2) the Prophet Muhammad.
هديه *hudya* /n pl *-aat, huday*/ rear driving-pole on a water-wheel (see Pl.E, 6).
اتهدى *ʔithada* /vi/ to be guided, be set on the right path (by God). - iva *mithidi*.
انهدى *ʔinhada* = *ʔithada*. - iva *minhidi*.
استهدى *ʔistahda* /vi/ to seek the right road. *ʔistahda bi-llaah w-balaaf xinaaq* ≈ ask God's guidance and stop fighting. ‖*lissa b-yistahda* to be just at the initial stages, as in *da ʔiḫna lissa ma-stahdenaa-f fil-ʔakl* we haven't even started eating yet. - vn *ʔistihda*; ava *mistahdi*.

ه د ى [2]

هدى *hada² (i)* /vt/ to give (s.o.) a present (of). *ʔahdii-k ʔeeh* what shall I give you? - ava *haadi*.
هديّه *hidiyya, hadiyya* /n pl *-aat, hadaaya*/ gift. *ʔin-nabi qibil il-hidiyya* the Prophet accepted gifts (said in pressing a gift etc. upon someone). *kal il-hidiyya w-kasar id-diqqiyya [prov]* he took the present and broke the pot in which it was brought (of ungracious behaviour).
هادى *haada* /vt/ to give (s.o.) a pressent (of). *hadet-ha bi-qzaazit riiḫa* I presented her with a bottle of perfume. - vn *mihadiyya*; ava *mihaadi*.
اتهادى *ʔithaada* /vi/ **1** to exchange presents. **2** to be given presents. *fil-ʔafraaḥ yithaada l-ɛariis wil-ɛaruusa b-ṣuḥab il-ward* at weddings, the bridegroom and the bride are presented with bunches of flowers. - iva *mithaadi*.
أهدى *ʔahda¹* /vt/ **1** to make a gift (of) (s.th.) to. *ʔil-hidiyya ɛala qadr' muhdii-ha [prov]* (the value of) a present reflects the value of the one who gives (not the value of the one to whom it is given, said in apologizing for the inadequacy of a gift). **2** to dedicate (a work). - vn *ʔihdaaʔ*; ava *mihdi, muhdi*.
إهداء *ʔihdaaʔ* /n pl *-aat*/ *[lit]* dedication.

ه د ى [3]

هدى *hidi (a)* /vi/ to become calm, abate, die down. *ʔin-naar hidyit* the fire abated. *bass' ʔihda w-baɛdeen nitkallim* just calm down and we'll talk afterwards. - vn *hadaawa, hadayaan, hidiẇw, huduuʔ*; ava *haadi*.
هادئ، هادى *haadi²* /adj */ calm. *raagil haadi* a quiet man. ‖*ʔalwaan hadya* quiet colours. - *naar hadya* a low fire.
أهدأ، أهدى *ʔahda²*, *ʔahdaʔ* /el/ quieter/quietest, calmer/calmest.
هدّأ، هدّى *hadda* /vt/ to calm down, quieten, cause to abate. *haddeet-u* I calmed him down. *haddi nafs-ak* (or *ʔaɛṣaab-ak* or *ʔaxlaaq-ak*) calm yourself! *haddit in-naar* she lowered the heat. *haddu l-liɛb* they slowed down the game. *ʔit-taks' hadda s-surɛa* the taxi slowed down. *haddi ya sawwaaq* slow down, driver! *haddit baal-i* (or *sirr-i*) she put my mind at ease. - vn *tahdiyya*; ava/pva *mihaddi*.
مهدّئ، مهدّى *muhaddi, muhaddiʔ* /n pl *-aat*/ tranquillizer, sedative.
اتهدّأ، اتهدّى *ʔithadda* /vi/ to be calmed down, be quietened, be abated. - iva *mithaddi*.
استهدى *ʔistahda* /vt/ **1** to consider (too) quiet. **2** to select for quietness. - vn *ʔistihda*; ava/pva *mistahdi*.

ه ا ز ا see ه ذ ا

ه ز ب see ه ذ ب

ه ز ر see ه ذ ر

ه ز ى see ه ذ ى

ه ر ى see ه ر ء

ه ر ب

هرب *hirib, harab (a)* /vi/ to escape, flee. *hirib bi-gild-u* he escaped with his skin. *ʔid-damm' harbaan min wiff-u* the blood has drained from his face. *bi-yihrab min iḍ-ḍaraayib* he's evading taxes. ‖*damm-i hirib* ≈ my blood ran cold. - vn *harab, huruub, harabaan*; ava *haarib*.
هربان *harbaan* /adj */ runaway, fugitive.
هربانجى *harabangi* /n pl *-yya*/ one given to evading work, responsibilities or commitments, shirker.
مهروب *mahruub: ʔil-maktuub ma-minnuu-f mahruub [prov]* there can be no flight from Fate.
مهرب *mahrab* /n/ refuge, sanctuary.
هرّب *harrab* /vt/ **1** to smuggle. **2** to hide away. *mif mumkin tiharrab minni ḫaaga* she would never hide things from me. — /vi/ **3** to run down, go dead (of a battery). ‖*muxx-u harrab* he flipped his lid. - vn *tahriib*; ava/pva *miharrab*.
تهريبة *tahriiba* /n pl *-aat*/ **1** instance noun of *tahriib*. **2** consignment of smuggled goods. *tahriibit ḫaʃiiʃ* smuggled batch of hashish.
مهرّب *muharrib* /n */ smuggler. *muharrib muxaddaraat* drug smuggler.
اتهرّب *ʔitharrab* /vi/ to be smuggled. - vn *taharrub*; iva *mitharrab*.
¶ *ʔitharrab min* to get around, evade.

ه ر ب د

هربد *harbid* /vt/ to rip to pieces. *ʃil-kalb' harbid hiduum-i* the dog ripped my clothes to pieces. - vn *harbada*; ava/pva *miharbid*.

اتهربد *ʃitharbid* /vi/ to be ripped to pieces. - vn *tiharbiid*; iva *mitharbid*.

تهربيدة *tiharbiida* /inst n/ a ripping, a tearing.

ه ر ج

هرج *harag* /n/ muddle, confusion. *harag wi-marag* turmoil, chaos.

هرّج *harrag, harrig* /vi/ to fool around, clown about. *bi-yharrag fil-faṣl* he turns the classroom into a circus. - vn *tahriig*; ava *miharrag*.

¶ *harrag ɛala-* to overwhelm with noise, shout down. *harragt[a] ɛal-mudarris xalleet-u ma-yiɛraf-ʃ' ydarris* I kept interrupting and shouting at the teacher and made him unable to teach.

مهرّج *muharrig* /n */ clown.

اتهرّج *ʃitharrag* /vi/ (impersonal) passive of *harrag*. *saaɛit ma yitharrag ɛalee ma-yiɛraf-ʃ' yitkallim* whenever there is an attempt to shout him down he (loses his composure and) can't manage to speak coherently. - iva *mitharrag*.

ه ر ج ل

هرجل *hargil* /vt/ to mess up, put into disarray. *ʃiṭ-ṭabuur maafi mhargil* the queue is moving in a disordered fashion. *ʃil-muwaẓẓaf ig-gidiid hargil if-fuṛl' xaaliṣ* the new employee messed up the work completely. - vn *hargala*; ava/pva *mihargil*.

اتهرجل *ʃithargil* /vi/ to be messed up, be put in disarray. - iva *mithargil*.

ه ر د م

هردم *hardim* /vt/ to ruin, tear down, destroy. *ʃiz-zilzaal hardim il-mabaani* the earthquake tore down the buildings. - vn *hardama*; ava/pva *mihardim*.

اتهردم *ʃithardim* /vi/ to be ruined, be torn down, be destroyed. - vn *tihardiim*; iva *mithardim*.

تهرديمة *tihardiima* /pl -*aat*/ instance noun of *tihardiim*.

ه ر ر[1]

هرّ *harr (u) [coarse]* **1** /vt/ to pass as diarrhoea. *harr illi kal-u* he passed all he had eaten. ‖*harreet barabra* ≈ I shat bricks (with fright). **2** /vi/ to have diarrhoea, have the trots. - vn *harr, hararaan*; ava *haarir*; pva *mahruur*.

هرّة *harra* /inst n, pl -*aat*/ a passing of diarrhoea. ‖ *ʃabu harra [coarse]* ≈ spineless coward, pants-shitter.

هرار *huraar, hiraar* /n/ *[coarse]* diarrhoea, squitters.

هرّار *harraar* /adj/ **1** allowing a free flow. *manxul harraar [rur]* sieve too coarse to catch the particles that should be separated out. **2** cowardly.

هرّر *harrar* /vt/ *[coarse]* to cause to shit (especially with fear). *ʃil-ɛalqa harrarit-u ɛala rooḥ-u* the beating had him shitting in his pants. - *tahriir*; ava *miharrar*.

ه ر ر[2]

هرّ *hirr: ɛeen il-hirr* tiger-eye (stone).

ه ر س[1]

هرس *haras (i)* /vt/ to crush. *ʃiṭ-ṭaɛmagi bi-yihris il-fuul* the *ṭaɛmiyya* maker mashes the broad beans. *xuḍaar mahruus* puréed vegetables. - vn *hars*; ava *haaris*; pva *mahruus*.

هرسة *harsa[1]* /pl -*aat*/ instance noun of *hars*.

هريسة *hariisa* /n/ any of a number of sweet confections made with flour, clarified butter, and sugar (also, sometimes, nuts, coconut etc.).

هرّاس *harraas* /n pl -*aat*/ roller (especially a road roller).

هرّاسة *harraasa = harraas*.

مهراس *mihraas, mihraas* /n pl *mahariis*/ large pestle (especially for large amounts of spices or broad beans). - also, a surface upon which the material to be crushed is placed.

اتهرس *ʃitharas* /vi/ to be crushed. *ṣawabɛ-i tharasit fil-baab* my fingers were crushed in the door. - iva *mithiris*.

انهرس *ʃinharas = ʃitharas*. - iva *minhiris*.

ه ر س)[2]

هرسة *harsa* <prob Fr *herses*> /n/ *[theat]* fly light(s).

هرسة *harsa[2]↓* /n/ *[path]* bilharziasis.

ه ر ش

هرش *haraf (u)* /vt/ **1** to scratch (to satisfy an itch). ‖*harafuu fi-ɛaʃara gneeh* they touched him for ten pounds. - *ʃuhruf fi-geeb-ak* scratch in your pocket (and find something for me). - *harafuu harfa* they gave him a good beating. - *haraft-a-ha ɋabl' ma ylabbisuu-ni maɋlab* I caught on to it before they could trap me. - *harafuu-lu muxx-u* they drove him around the bend. - *harf' ɛidda* wear and tear on tools. - *kutr il-harf' yṭallaɛ il-bala [prov]* (much scratching gets rid of mange) any problem can be solved by perseverance. **2** to bribe. - vn *harf, harf, harafaan*; ava *haarif*; pva *mahruuf*.

هرش *harf* /n/ *[path]* ringworm.

هرّاسة *harraasa* /n pl *-aat*/ backscratcher.
مهرشة *mahrasa* /n pl *-aat*/ backscratcher.
اتهرش *ʔitharaʃ* /vi/ passive of *haraʃ*. - iva *mithirif*.
انهرش *ʔinharaʃ* = *ʔitharaʃ*. - iva *minhirif*.
اتهرّش *ʔitharraʃ* /vi/ to scratch oneself extensively and vigorously. - ava *mitharraʃ*.

ه ر ش م
هرشم *harʃim* /vt/ to cause an injury to (the face or part of it). *harʃimt' manaxiir-u* I gave him a bloody nose. - vn *harʃama*; ava/pva *miharʃim*.
اتهرشم *ʔitharʃim* /vi/ passive of *harʃim*. - iva *mitharʃim*.

ه ر ق
هرّق *harraq* /vi/ **1** to laugh loudly. *ma-tharraq-ʃ' fid-diħk' la-yismaɛuu-k* don't laugh so loudly lest they hear you. **2** to make fun, make a laughing-stock (of s.o. or s.th.). *qaɛadu yharraqu ɛas-sitt il-ɛaguuza* they went on making fun of the old woman. - vn *tahriiq*; ava *miharraq*.
اتهرّق *ʔitharraq* /vi/ (impersonal) passive of *harraq*. *muʃ ʃana lli yitharraq ɛalee* I am not one to be laughed at. - iva *mitharraq*.

ه ر ك
هرك *harak (u)* /vt/ to mash. *baṭaaṭis mahruuka* mashed potatoes. - vn *hark*; ava *haarik*; pva *mahruuk*.
اتهرك *ʔitharak* /vi/ to be mashed. - iva *mithirik*.
انهرك *ʔinharak* = *ʔitharak*. - iva *minhirik*.

ه ر م [1]
هرم *haram* /n pl *ʃahraam, ʃahramaat*/ pyramid. ‖ *ʃil-haram* (1) the Pyramids of Guiza. (2) area between Guiza Square and the Pyramids. *ʃiħna sakniin fil-haram* we live out near the Pyramids. - *ʃibn il-haram [obsol]* epithet for an Egyptian. - *lamma l-haram yitħarrak min maṭraħ-u* when the pyramid is moved from its place (i.e., never).
هرمي *harami* /adj/ pyramidal.
مهرّم *miharram* /adj/ pyramid-shaped.

ه ر م [2]
هرمة *hirma* /fem adj/ old and seedy (of a woman). *ya ʃibn il-hirma* ≈ you son of a filthy old hag!

ه ر م و ن
هرمون *hurmoon* <Engl> /n pl *-aat*/ hormone.

ه ر م ي س
هرميس *harmiis* /n pl *haramiis*/ vertical axle of the main cog of the *saqya* (see Pl.E, 4).

ه ر ن
هرن *hurn* <Engl *horn*> /n pl *-aat*/ bell (of a wind instrument).

ه ر ه ر
هرهر *harhar* /vi/ **1** *[coarse]* to pass diarrhoea, squitter. **2** to wobble, shake (of flabby flesh). - vn *harhara*; ava *miharhar*.

ه ر و ل
هروّل *harwil* /vi/ to walk fast, half run. - vn *harwala*; ava *miharwil*.
هرولة *harwala* /n/ quick pace.
مهروّل *miharwil* /adj */ loose and ill-fitting (of a garment).

ه ر ى
هرى *hara (i)* **1** /vt/ to cause to disintegrate. *ʃil-ɣaliyya harit il-huduum* boiling wore out the clothes. *harit il-ɛeef lil-firaax* she crumbled the bread for the chickens. ‖ *bis-simm il-haari* ≈ may it do you harm! (said on parting with something, especially food, very reluctantly). - *ɛiyaṭ-ha hara ʠalb-i* ≈ her crying tore into my heart. - *nizil fiyya ʃtiima lamma hara badan-i* ≈ he went on insulting me till I couldn't bear it any longer. **2** /vi/ to feel agitated, fume. *xallii yihri w-yinkut* let him eat his heart out (with frustration). *hara f-badan-u* he fumed with anger. - vn *hary, harayaan, hariyya*; ava *haari*; pva *mahri*.
هرية *harya* /pl *-aat*/ instance noun of *hary*.
اتهرى *ʔithara* /vi/ **1** to disintegrate. **2** to be made to disintegrate. - ava/iva *mithiri*.
انهرى *ʔinhara* = *ʔithara*. - ava/iva *minhiri*.

ه ر و ى ن
هيروين *hiruwiin* <Fr> /n/ heroin.
هورايين *hurayiin* = *hiruwiin*.

ه ذ ى see ه ز ى

ه ز ء
هزأ *hazaʔ (a)* /vi/ to behave disdainfully, behave scornfully (towards s.o.). *dayman yihzaʔ bi-mraat-u ʠuddaam in-naas* he always treats his wife with contempt in public. - vn *huzʔ, hazaʔaan*; ava *haaziʔ*.
هزؤ *huzuʔ* /adj invar/ insignificant, contemptible, open to ridicule.

أهزأ ʕahzaʔ /el/ more/most insignificant, contemptible etc.

هزوّة *huzuʔʔa* /adj invar/ *[slang]* = *huzuʔ*.

مهزأة *mahzaʔa* /n/ scorn, ridicule.

هزّأ *hazzaʔ* /vt/ to belittle, cut down to size. *hazzaʔit-ni f-wisṭ in-naas* she humiliated me in front of everyone. - vn *tahziiʔ*; ava *mihazzaʔ*.

مهزّأ *muhazzaʔ* /adj */ inspiring scorn and contempt. *raagil muhazzaʔ fil-ḥitta kull-a-ha* a man looked down on by the whole neighbourhood.

اتهزّأ *ʔithazzaʔ* /vi/ to be belittled, be cut down to size. *ʔithazzaʔna fil-matʃ* we were trounced thoroughly in the match. - iva *mithazzaʔ*.

استهزأ *ʔistahzaʔ* /vi/ **1** to assume insignificance (of s.o.). **2** = *hazaʔ*. - vn *ʔistiḥzaaʔ*; ava *mistahzaʔ*.

ه ز ب

هذّب *hazzib* /vt/ **1** to give (s.o. or s.th.) polish or finish. *hazzib ʔaxlaaq-ak* smarten up your manners! **2**↑ to trim (the edges of s.th.), even up. *xallı l-mizayyin yihazzib ʃaɛr-ak ʃiwayya* get the barber to trim your hair a bit! - vn *tahziib*; ava *mihazzib*.

مهذّب *muhazzab* /adj */ decent, respectable. *raagil muhazzab* a decent man. *muɛamla muhazzaba* polite treatment.

اتهذّب *ʔithazzib* /vi/ passive of *hazzib*. - iva *mithazzib*.

ه ز ر

هزار *hizaar* /n/ frivolity, fooling around. *ʔiʃ-fuṙl' miʃ hizaar* work is no occasion for fooling around.

هزّر *hazzar* /vi/ to be frivolous, fool around. *da-ḥna b-nidḥak maɛaakı w-bı-nhazzar* we are just having a laugh with you and joking around. - ava *mihazzar*.

ه ز ز

هزّ *hazz (i)* /vt/ **1** to shake. *hazz' raas-u* he shook his head. *b-ahizz' nafs-i ɛal-kursi* I rock myself in the chair. ‖*hazz' wisṭ-(u)* to belly-dance. - *hizz' ʈuul-ak [abus]* get a move on! - *hizz' ya wizz* ≈ shake it baby! - *bi-yhizz-i-lu l-qawuuq* he doffs his cap to him (with excessive deference). **2** to shock, upset. *ʔil-xabar da hazz-i-na* the news shook us. **3** to sift (grain). - vn *hazz, hazazaan*; ava *haaziz*; pva *mahzuuz*.

هزّة *hazza* /inst n, pl *-aat*/ a shake, a tremor. *hazzaat ʔarḍiyya* earth tremors.

مهزوز *mahzuuz* /adj */ shaken, shaky. ‖*da raagil mahzuuz fi-ʃuṙl-u* ≈ he is a failure in his work. - *muxx-u mahzuuz* he's nutty!

هزازة *hizaaza* /n/ **1** chaff. **2** that which remains in a sieve after sifting.

هزّاز *hazzaaz* /adj/ **1** shaking, swaying. *kursi hazzaaz* rocking chair. *ḥamaam hazzaaz* pouter pigeon. — /n pl *-aat*/ **2** vibrator. ‖*ḥazzaaz xaraṣaana [constr]* cement mixer. **3** springboard.

اهتزّ *ʔithazz* /vi/ to be shaken, tremble. *markaz-ı thazz* my position was shaken. *ma-thazzit-lii-f ʃaɛra* I didn't turn a hair. - ava/iva *mıthazz*.

انهزّ *ʔinhazz* = *ʔithazz*. - ava/iva *minhazz*.

اهتزّ *ʔihtazz*↑ /vi/ to shake, vibrate. ‖*ʔihtazz' min il-ḥadsa* he was shaken up by the accident. - vn *ʔihtizaaz*; ava *mihtazz, muhtazz*.

ه ز ل [1]

هزل *hazal[1] (ı)* /vt/ to cause to lose weight, make lean. *ɛayaa-ha l-muzmin hazal-ha* her chronic illness made her thin. - vn *huzaal, hazalaan*; ava *haazil*; pva *mahzuul*.

هزل *hazal[2]* /n/ weakness, debility.

هزال *huzaal* /n/ weakness, debility.

هزلان *hazlaan* /adj */ weak, debilitated.

هزيل *haziil*↑ = *hazlaan*.

اتهزل *ʔithazal* /vi/ to lose weight, be made or become lean or emaciated. ‖*yaɛni ḥa-tithizil law gibt ı̣l-ʔakl' l-nafs-ak* do you think it would hurt you if you were to get your own food! - ava/iva *mithızil*.

انهزل *ʔinhazal* = *ʔithazal*. - ava/iva *mınhizil*.

ه ز ل [2]

هزل *hazl* /n/ fun, joking, jesting. *di masʔala gadd' wi-kfayaa-k hazl' fiiha* ≈ stop making fun of this case, it is a serious one!

هزلي *hazli* /adj/ farcical, comical. *masraḥıyya hazliyya* a farce, farcical play.

هزلت *hazulat* /interj/ what a pass things have come to! now I've seen it all! as in *w-allaahı hazulat lamma ḥaqrit-ak baqeet tikallim-nı bıʃ-ʃakl-i-da* things have reached a fine state when you come and speak to me like that!

مهزلة *mahzala* /n pl *mahaazıl*/ farce, farcical situation.

ه ز م

هزم *hazam (i)* /vt/ to defeat. *hazamuu-na fil-matʃ* they defeated us in the match. ‖*haazim il-lazzaat* death. - vn *hazm, hazamaan*; ava *haazim*; pva *mahzuum*.

هزيمة *haziima* /n pl *hazaayim*/ defeat. *rooḥ il-haziima* defeatism.

انهزم *ʔithazam* /vi/ to be defeated. - iva *mithizim*.

انهزم *ʔinhazam* = *ʔithazam*. - iva *minhizim*.

انهزامي *ʔinhizaami*↑ /adj */ defeatist.

ه ز ه ز
هزهز *hazhiz* /vt/ to shake. *bi-thazhiz il-ɛayyil fi-ħigr-a-ha* she dandles the baby on her lap. - vn *hazhaza*; ava/pva *mihazhiz*.
اتهزهز *ʔithazhiz* /vi/ to be shaken, shake or tremble. *ʔil-ɛayyil yiħibb' yithazhiz* the child likes to be dandled. *maʃya tithazhiz* she wiggles as she walks. *bi-yithazhiz ɛak-kursi* he rocks back and forth in the chair. - ava/iva *mithazhiz*.

ه ز ى
هذى *haza (i)* /vi/ to rave, talk deliriously. - vn *hazayaan*; ava *haazi*.

ه س س
هسّ *hass (i)* /vi/ **1** to hiss. **2** to shut up, comply with a command to shut up. *saaɛit ma ʔaqul-lak huss' thiss' ʈawwaali* as soon as I tell you to shut up, you shut up! ‖*ma-fii-ʃ bass' wala hass* ≈ shut up yourself! (retort to one who says *huss*). - vn *hass, hasasaan*; ava *haasis*.
هسّ *huss* /interj/ shush! hush!
هسّ *hiss* /interj/ whoa! (to stop, slow down, or calm an animal).

ه ش ش ١
هشّ *haff' (i)* /vt/ to drive away (flies or birds). *hiff id-dibbaan min ɛala wiff-ak* shoo the flies off your face! ‖*la yhiff' wala yniff* ≈ he's good for nothing, he can't do anything. - vn *haff, hafafaan*; ava *haafif*; pva *mahfuuf*.
هشّ *hiff* /interj/ **1** shoo! (said when driving off flies or birds). **2** whoa! (to stop, slow down or calm an animal).
اتهشّ *ʔithaff* /vi/ to be driven away (of flies or birds). - iva *mithaff*.
انهشّ *ʔinhaff* = *ʔithaff*. - iva *minhaff*.

ه ش ش ٢
هشّ *haff²* /adj */ delicate, fragile. *ʔil-ɛaqm' btaɛ-ha haff* its bones are fragile.

ه ش ك
هشّك *hiffik: hiffik hiffik* interjection indicating pleasure in the presence of dancing, revelry or the like.
هشّك *haffik* /vt/ to dandle (a child). - vn *tahfiik*; ava/pva *mihaffik*.
انهشّك *ʔithaffik* /vi/ to be dandled (of a child). - iva *mithaffik*.

ه ش م
هاشم *haafim* /prop n/ male given name. *ʔumm" haafim* epithet of Sayyida Zaynab.

هشّم *haffim↑* /vt/ to smash, crush. - vn *tahfiim*; ava/pva *mihaffim*.
اتهشّم *ʔithaffim↑* /vi/ to be smashed, be crushed. - vn *tahaffum↑*; iva *mithaffim*.

ه ض م
هضم *haḍam (i)* /vt/ to digest. *miɛdit-i mif qadra tihḍim il-ʔakl id-dasim* my stomach cannot digest rich food. *haḍam id-dars* he inwardly digested the lesson, he took the lesson to heart. ‖*ma-niqdar-ʃ' nihḍim il-mudiir* we can't stomach the director. - *ʔir-raagil da haaḍim ħaqq-i* that man has gobbled up my rights. - vn *haḍm*; ava *haaḍim*; pva *mahḍuum*.
انهضم *ʔithaḍam* /vi/ to be digested. ‖*ʔir-raagil da ma-yithiḍim-ʃ* that man is insufferable. - iva *mithiḍim*.
انهضم *ʔinhaḍam* = *ʔithaḍam*. - iva *minhiḍim*.
هضّم *haḍḍam* /vt/ to cause to digest. *ʔid-dawa da yhaḍḍam il-ʔakl* this medicine aids digestion of food. - ava *mihaḍḍam*.
مهضّم *muhaḍḍim* /n pl *-aat, -aat*/ digestive.

ه ض و م
هاضومة *haḍuuma* /n pl *hawaḍiim*/ large chunk (of meat). - also *hanḍuuma*.

ه ط ل
هطّل *haṭṭal* /vi/ to be slow and weak, be slack and indisciplined. *bi-yhaṭṭal fi-maʃyit-u* he ambles awkwardly along. *bi-yhaṭṭal fi-kalaam-u* he rambles on when he talks. *mihaṭṭal fi-libs-u* sloppy in his dress. - vn *tahṭiil*; ava *mihaṭṭal*.

ه غ م ى –
هيغومينوس *hixumeenus* <Gr *hêgoumenos*> /n/ *[Chr]* hegumen. - also *ʔixumeenus*.

ه ف ا ن
هافانا *havaana, havaana* <Fr *havane*> /adj invar/ light brown.

ه ف ء see ه ف ى

ه ف ت
هفت *hifit (a)* /vi/ to become weak or exhausted (from hunger or the like). *ʔana hfitt' mig-guuɛ* I felt spent from hunger. - vn *hafataan*; ava *haftaan*.
هفتان *haftaan* /adj */ weak, spent, exhausted, faint (from hunger), starved.
هفّت *haffit* **1** /vt/ to make weak or exhausted.

ʔiṣ-ṣiyaam iṭ-ṭawiil bi-yhaffit-ni long fasting exhausts me. **2** /vi/ = *hıfıt*. - vn *tahfıt*; ava/pva *mihaffit*.

اتهافت *ʔithaafit* /vi/ to flock, crowd, rush together. *ʔif-fubbaan bi-yithaftu ɛala s-sinima* the kids fall over one another to get into the cinema. - ava *mithaafit*.

ه ف ط ا -

هفطايم *haftaayim* <Engl> /n/ **1** half-time (in a match). **2** (also *ṭaayim*) half (in a match). *ʔil-haftaayim il-ʔawwalaani* the first half.

ه ف ف [1]

هفّ *haff (i)* /vi/ **1** to blow past, pass quickly by. *ʔil-hawa haff* a gust of wind came. *haffit ɛaleena riiḥit kabaab* we caught a whiff of kebab. — /vt/ **2** to appropriate quickly for oneself. *haff il-ɑirfeen wi-miʃi* he snaffled the money and went off. *nizlu haff' fil-ʔakl* they set upon the food greedily. ‖ *haffeet miʃwaar wi-rgiɛt* I popped out on an errand and came back. - *haffeena sandawitʃeen fis-sikka* we snatched a couple of sandwiches on the way. - *haff-i-lu saɛteen fil-maktab* he snatched a couple of hours in the office. **3** to give a quick going-over to. *haffit il-ʔooḍa* she gave the room a quick sweep round. *haffeet daqn-i wiff* I gave myself a quick once-over with the razor. **4** to assail with, set upon with. *haff-i-ni ɑalam* he up and slapped me. *haffeet-u ʔinzaar* I gave him a warning. - vn *haff, hafafaan*; ava *haafif*; pva *mahfuuf*.

¶ *nifs-(u) haffit-(u)* or *mazaag-(u) haff-(u)* to have a sudden yen or a desire. *nifs-i haffit-ni ʔaruuḥ ʔiskindiriyya* I had a whim to go to Alexandria. *nifs-a-ha haffit-ha ɛala kaasit dandurma* she had a sudden yen for a dish of ice cream. - *haffa ɛala* to make (s.o.) nostalgic. *ʔil-balad haffit ɛalayya* I became nostalgic for my home town.

هفّة *haffa* /pl *-aat*/ instance noun of *haff*. ‖ *gat-li haffa* I was taken by a (crazy) whim. - *da raagil haffa* he is a man of odd mentality.

مهفوف *mahfuuf* /adj * and pl *mahafiif*/ touched in the head, odd.

أهفّ *ʔahaff* /el/ more/most touched in the head or odd.

انهفّ *ʔithaff* /vi/ passive of *haff*. ‖ *ʔithaff' f-muxx-u* he became slightly touched, he went a bit strange. - iva *mithaff*.

ه ف ف [2]

هفّ *huff* /interj/ **1** sound of blowing out a fire or cooling off a hot object. *ɑaal huff' ṭafa l-lamba* he puffed out the lamp. **2** expletive expressing briefness. *huff' ṭiliɛ in-nahaar* and in as short a time as it would take to say *huff*, the day dawned!

ه ف ق

هفق *hafaq* /adj invar/ insignificant, of no worth or substance. *ʔabadan ma-tsammi-hum-ʃ' riggaala - dool hafaq* never call them men, they're trash!

ه ف ن see ه ف ا ن: *havaana, havaana*

ه ف ه ف

هفهف *hafhif, hafhaf* /vi/ to billow. *ʔil-hawa b-yxalli l-fustaan yihafhif* the wind makes the dress billow out. *faɛr-a-ha l-ḥariir bi-yhafhif ɛala wiff-a-ha* her silken hair wafts about her face. - vn *hafhafa*; ava *mihafhif*.

هفهاف *hifhaaf* /adj/ thin and fine. *ʔifoon hifhaaf* filmy chiffon.

ه ف و

هفوة *hafwaˀ* /n pl *hafawaat*/ slip, error. *samiḥ-ni di kat hafwa minni ɤaṣbᵃ ɛanni* forgive me, it was a mistake I made unwillingly.

ه ف ي

هفيّة *hafiyya* /masc and fem adj, pl *hafaaya*/ insignificant, light-weight (of people). *ʔaxuu muḥtaram wi-lii ɑiima laakin huwwa hafiyya* his brother is respected and has some position in society, whereas he himself is a nobody.

استهفا *ʔistahfa* /vt/ **1** to consider worthless and insignificant, belittle. **2** to select (s.o.) for worthlessness. *ʔistahfit laha raagil wi-gawwizit-u ʔuxt-a-ha l-fasdaana* she found a submissive little nobody and got him to marry her flighty sister. - ava *mistahfi*.

ه ق ق

هقّ *haqq (u)* /vi/ to slouch, skulk, slink. *maafi yhuqq* slouching along. *kutr' haqq-u ḥawaleeha xalla k-kalaam yiktar ɛaleeha* his hanging around her so much set people's tongues wagging about her. - vn *haqq*; ava *haaqiq*.

ه ك ذ ا see ه ا ك ز ا: *hakáza*

ه ك ع

هكّع *hakkaɛ* /vi/ to grow old and feeble. *hiyya bi-tfaḍḍal taaxud ir-raagil il-mıhakkaɛ da ɛaʃaan fuluus-u* she would rather marry this decrepit old man

because of his money. *ʕil-ʁarabiyya hakkaʁit* the car has become very old and dilapidated. - vn *tahkiiʁ*; ava *mihakkaʁ*.

ه ك ك

هكّ *hakk (u)* /vi/ to stagger from weakness. *ḫuṣaan taʁbaan maafi yhukk* a sick horse barely able to stagger along. *ṣabiyya tʁiif ʃizzaay maʁa ʁaguuz yihukk* how can a young girl live with a decrepit old man? - vn *hakk*; ava *haakik*.

ه ك م

اتهكّم *ʃithakkim↑* /vi/ to behave scornfully (towards s.o. or s.th.), pour ridicule (upon s.o. or s.th.). - vn *tahakkum*; ava *mithakkim*.

ه ل

هل *hal* interrogative particle. *hal ik-kalam-da ṣaḥiiḥ* is that true? *hal il-walad da ḫa-yingaḥ* will this boy succeed? *laazim tifuuf hal humma naas kuwayyisiin walla laʃ* you must find out whether or not they are good people. *ʁayziin niʁraf hal huwwa ḫa-yiigi walla laʃ* we want to know whether he is coming or not. *ya hal tara* I wonder.

ه ل ب [1]

هلب *hilb* /n pl *hilíba, ʃahlaab*/ **1** grapnel anchor. **2** meat hook.

هلّب *hallib* /vt/ to pick up (money) from here and there in a dishonest way. - vn *tahliib*; ava *mihallib*.

اتهلّب *ʃithallib* /vi/ passive of *hallib*. - iva *mithallib*.

ه ل ب [2]

مهلّبيّة *mahallabiyya* /n/ blancmange (often flavoured with vanilla or rose water). - /adjectivally/ *bint[i] mhallabiyya* a dish of a girl.

ه ل ب ت

هلبتّ *halbatt* <perh T *helbet* from Ar *ʃal-batt*> /adv/ probably, possibly. *ʃil-ʃutubiis miʃ bayin-lu ʃasar - halbatt[i] ḫa-nuqaf lil-maʏrib* there's no sign of the bus; we may well have to stand here till sunset. *miʃ raaḍi yxallaṣ il-waraq - halbatt[i] ykuun ʁayiz-ni ʃana ʃaʁmil-u* he's not willing to finish off the papers; he probably wants me to do them.

ه ل ت

هلت *halt* <Engl> /n pl *-aat/ [obsol]* halt, small railway station.

ه ل س [1]

هلس *hals* /n/ **1** wenching, debauchery. **2** *(kalaam) hals* empty talk, nonsense.

هلّاس *hallaas* /n * and pl *hallaasa*/ **1** libertine, profligate. **2** braggart.

هلّس *hallis* /vi/ **1** to go wenching, go in search of debauchery. **2** to talk nonsense. - vn *tahliis*; ava *mihallis*.

مهلّساتي *mihallisaati* /n pl *-yya*/ libertine, profligate.

ه ل س [2] see ه ل ل و س: *halluus*

ه ل ش see ه ل ل و س: *halluuf*

ه ل ض م

هلضم *halḍam* /vi/ **1** to mumble, mutter. **2** to talk drivel, talk nonsense. — /vt/ **3** to appropriate for oneself, bag. *ʃayy[i] mablaʏ yiigi ṭaraf-u yhalḍam-u* any sum of money that comes his way he snaffles. - vn *halḍama*; ava *mihalḍam*.

هلضام *hilḍaam* /adj pl *halaḍiim, hilḍaama*/ **1** given to senseless talk. *ma-tismaʁ-luu-ʃ kalaam da ṭuul ʁumr-u hilḍaam* don't listen to him - he always talks nonsense. **2** evasive, slippery.

ه ل ف و ت

هلفوت *halfuut* /adj pl *halafiit*/ worthless. *walad halfuut* a feckless youth.

ه ل ك [1]

هلك *hilik (a)* /vi/ to be exhausted, be consumed. *hilikt[i] miʃ-fuʏl* the work has worn me out. ‖*fuʏl it-tamriiḍ da halaak* nursing is hell! - vn *halaak*; ava *halkaan*.

هلك *halak (i)* /vt/ to exhaust, consume. *ʃil-ḫuzn[i] halak-ha* sorrow has worn her out. *halak il-filuus kull-a-ha* he spent every penny of the money. - vn *halk, halakaan, halaak*; ava *haalik*; pva *mahluuk*.

هلكان *halkaan* /adj */ spent, exhausted, worn out, consumed.

هالك *haalik* **1** /adj */ *[Isl]* mortal. *kull[i] ʃeeʃ haalik ʃilla wagh allaah* everything is transient except for God. ‖*ya haalik* you infidel! - *min haalik li-maalik* from bad to worse. **2** /coll n/ (industrial) waste.

هلوك *haluuk[↓]* = *haluuki*.

هلوكي *haluuki* /n pl *-yya, halukiyyiin*/ squanderer, extravagant spender.

مهالك *mahaalik* /pl n/ fatal calamities, death-bringing disasters. *ya munaggi min il-mahaalik* O Rescuer from death! (invocation uttered on witnessing an accident or the like).

اتهلك ʔithalak /vi/ to be or become exhausted. - ava/iva *mithilik*.
هلّك *hallik* /vt/ to exhaust, consume utterly. *hallik-na mid-diḫk* he has almost killed us with laughter. - ava/iva *mihallik*.
اتهلّك ʔithallik /vi/ to be exhausted, be utterly consumed. - iva *mithallik*.
استهلك ʔistahlik, ʔistahlak /vt/ **1** to consume, use up. *bi-nistahlik ıtneen ţinn' zeet fil-yoom* we consume two tons of oil per day. **2** *[finan]* to amortize (a debt etc.). - vn *ʔistihlaak*; ava/pva *mistahlik*; pva *mustahlak*.
استهلاكى ʔistihlaaki /adj/ pertaining to consumption. *gamʕiyyaat istihlakiyya* consumer co-operatives.
مستهلك *mustahlık* /n */ consumer.
مستهلك *mustahlak* /adj/ not fit for use, used up. *ʕarabiyya mustahlaka* worn-out car. *sagaayir mustahlaka [joc]* lousy cigarettes.

ه ل ك [2]
هالوك *haluuk* [2] /coll n/ *[bot]* broom-rape, a weed parasite on various crops (especially broad beans and tomatoes).

ه ل ل [1]
هل *hall (i)* /vi/ to appear, reach its season, start. *ʔif-fahr illi yhill* the coming month. *ʔil-baţţiix hallit baʃayr-u* the early-ripened melons started appearing (on the market). *saaʕit ma thill' thill il-maşaayib maʕaak* disasters befall (us) as soon as you show up. ‖*hall' hlaal-ak ya ramaḍaan* welcome, O month of Ramadan! - *hall' hlaal-ak* (or *nuur-ak*) your crescent (or light) has appeared! (welcoming someone after a long absence). - vn *halalaan*; ava *haalil*.
هلال *hilaal* /n pl *ʔahilla*/ **1** crescent moon. **2** crescent (shape). *ʔil-hilaal il-ʔaḫmar* the Red Crescent. **3** *bani hilaal* the Beni Hilal, a North African Arab tribe, being the tribe of Abu Zayd el-Hilali.
هلالى *hilaali* /adj/ **1** pertaining to the crescent moon. *fahr' hlaali* a lunar month. **2** crescent-shaped. *fatḫa hilaliyya* a crescent-like aperture. **3** pertaining to *bani hilaal*. *ʔabu zeed il-hilaali* warrior hero of a folk epic. *ʔis-siira l-hilaliyya* the folk epic of which Abu Zayd el-Hilali is the hero.
الهلاليّة *ʔil-hilaliyya* /coll n/ the people of the tribe of Beni Hilal.
استهلّ *ʔistahall* /vt/ to begin, start. *ʔistahall' xuţbit-u bif-fiʕr* he started his speech with poetry. - vn *ʔistihlaal*; ava *mistahall*.
مستهلّ *mustahall* /n/ beginning, start, introduction. *kaan mustahtir fi-mustahall' ʃabaab-u w-dilwaqti baqa raagil masʔuul* he was reckless in his early youth, but now he has become a man of responsibility.

ه ل ل [2]
هليلة *hulleela* /n pl *-aat*/ scene, row. *ʕamalit-li hulleela* she made a scene with me.
هلّولة *halluula* = *hulleela*.
هلل *hallil* /vi/ **1** *[Isl]* to say *la ʔilaaha ʔilla llaah*. **2** to cheer, vociferate in approval. *baʕd' ma xallaşit il-kubleeh ın-naas kull-a-ha hallılıt* when she finished the verse, everyone broke into a storm of applause. **3** to make a scene, kick up a row. *balaaʃ tuqʕud tihallil ʔaḫsan tilimm[a] ʕaleena n-naas* don't go on making a scene or everyone will gather around us. - vn *tahliil*; ava *mihallil*.
اتهلّل *ʔithallil* /vi/ **1** to be delighted, rejoice, light up (with joy). *bi-mugarrad ma ʃafit-u wiff-a-ha thallil bil-faraḫ* as soon as she saw him, her face beamed with delight. **2** (impersonal) passive of *hallil*. *yaama thallil-lu lamma kaan rayyis ʕaleehum wi-dilwaqti tnasa* how much he was cheered when he was their boss, now he's forgotten! - vn *tahallul*; ava/iva *mithallil*.

ه ل ل [3]
هلاّ *halla* [2] /interj/ how wonderful! *halla halla ʕal-gadd' wil-gadd' halla halla ʕalee* three cheers for seriousness! (expression of appreciation of, and exhortation to, seriousness).

ه ل ل [4] see ه ل ء: *halla'*

ه ل ل و س
هلّوس *halluus* (also *halluuf*) <Copt> /n/ **1** type of pondweed. **2** /coll n/ cobwebs.

ه ل م م
هلّم *halumma* /adj invar/ very abundant, very numerous. *filuus halumma* masses of money. *naas halumma* masses of people. ‖*wi-halumma garra* and so on, et cetera.

ه ل ن د
هولاندا *hulanda* /prop n/ Holland.
هولاندى *hulandi* **1** /adj */ Dutch. ‖*samn' hulandi* cooking fat made from a mixture of animal and vegetable fats. **2** /n */ a Dutchman. **3** /n, no pl/ the Dutch language.

ه ل ه ل
هلهل *halhil* /vt/ **1** to make tattered, wear out. *leeh*

halhilt il-ɢamiiṣ kida why have you made your shirt so ragged? **2** to abuse severely. *misikt-u halhilt-u* I gave him a piece of my mind. - vn *halhala*; ava/pva *mihalhil*.

هلهوله *halhuula* /n pl *halahiil*/ tattered garment.

هلهيلة *hulheela = halhuula*.

هليهلى *hilihli* /adj invar/ slapdash. *fuvl' hlihli* slapdash work. - /adverbially/ *ɛaayiʃ hilihli* he lives chaotically.

اتهلهل *ʔithalhil* /vi/ **1** to become or be made tattered. *huduum-u thalhilit* his garments wore out. **2** to be abused, be given a dressing-down. - ava/iva *mithalhil*.

ه ل و س

هلوس *halwis* /vi/ to suffer from delirium or hallucinations. *w-ana ɢaayim min il-bing' kunt' b-ahalwis* as I was coming out of the anaesthetic I was hallucinating. - vn *halwasa*; ava *mihalwis*.

هلوسة *halwasa* /n/ hallucination, delirium. *ɧubuub il-halwasa* hallucinatory drugs.

ه ل ى ك -

هيلوكوبتر *hilyukubtar* (also *ṭayyaara hilyukubtar*) <Engl> /n pl *-aat*/ helicopter.

ه م ب ك

هبك *hambak* <poss Engl *humbug*> /vi/ to make a fulsome and false show (of servility, in boasting etc.). *hambaka ɢaleena w-baɛdeen fafuuf* we get endless humbug - and then nothing. - vn *hambaka;* ava *mihambak*.

هباك *himbaak* /n pl *hambakiyya*/ hypocritical flatterer or braggart.

ه م ج

هجى *hamagi* /adj pl *hamag*/ uncouth, barbaric. *ʔin-naas illi fooq hamag* the people upstairs are savages.

هجيّة *hamagiyya* /n/ disorderliness. *laazim tisiib-ak min ɧaalit il-hamagiyya lli nta ɢaayiʃ biiha* you must put an end to this disorderly way of life you are leading.

ه م د

هد *himid (a)* /vi/ to become exhausted, become spent. *ʔana hmidt' min kutr if-fuvl* I felt worn out from so much work. *ʔin-naar himdit* the fire died down. ‖*ʔihmad* be quiet! shut up! -vn *humuud, hamadaan*; ava *hamdaan*.

هد *hamad (i)* /vt/ to hurl down. *misik if-fanṭa w-hamad-ha ɢal-ʔarḍ* he seized the bag and hurled it to the ground. - vn *hamadaan*; ava *haamid*; pva *mahmuud*.

اتهمد *ʔithamad* /vi/ **1** to be hurled down. **2** to become exhausted or spent. - ava/iva *mithimid*.

انهمد *ʔinhamad = ʔithamad*. - ava/iva *minhimid*.

هدّ *hammid* /vt/ to exhaust, debilitate. *gism-i mhammid* my body is exhausted. - vn *tahmiid*; ava/pva *mihammid*.

اتهدّ *ʔithammid* /vi/ to become exhausted, become debilitated. - ava *mithammid*.

ه م ر

هر *hamr* /adj invar/ *[non-Cairene]* made of a certain fine heat-resistant type of clay (of cooking-vessels etc.).

ه م ز

همز *hamaz' (i)* /vt/ **1** to spur (a horse). **2** to write the *hamza* over (a letter). **3** to enunciate (a word) with a glottal stop instead of a vowel. - vn *hamz*; ava *haamiz*; pva *mahmuuz*.

همز *hamz* /n/ backbitting, malicious gossiping. *nizil hamz' (w-lamz') f-sumɛit-ha* he attacked her reputation with a vengeance.

همزة *hamza* /n pl *-aat*/ **1** instance noun of *hamz*. **2** glottal stop. **3** written sign for a glottal stop. ‖*kaanit hamzit il-waṣl' benathum* she was the connecting link between them.

مهموز *mahmuuz* /n pl *mahamiiz*/ spur.

مهماز *muhmaaz, mihmaaz = mahmuuz*. see further under م ه م ز

اتهمز *ʔithamaz* /vi/ passive of *hamaz*. - iva *mithimiz*.

انهمز *ʔinhamaz = ʔithamaz*. - iva *minhimiz*.

ه م س

همس *hamas (i)* /vi/ to whisper. *hamas fi-widn-i* he whispered in my ear. - vn *hams*; ava *haamis*; pva *mahmuus*.

همسة *hamsa* /inst n, pl *-aat*/ **1** a whisper. **2** a brief moment. *ʔistannaa-ni miʃ ɧ-aviib hamsa* wait for me, I won't be a moment.

اتهمس *ʔithamas* /vi/ (impersonal) passive of *hamas*. *yaama ravy' ktiir bi-yithimis fi-wdaan-i ɢala n-naas* how much gossip about other people has been whispered in my ears! - iva *mithimis*.

انهمس *ʔinhamas = ʔithamas*.

اتهمّس *ʔithammis* /vi/ to whisper together. *ʔintu bi-thammisu ɢala ʔeeh* what are you all whispering about? - ava *mithammis*.

اتهامس *ʔithaamis = ʔithammis*. - ava *mithaamis*.

ه م ش [1]

هامش *haamiʃ* /n pl *hawaamiʃ*/ margin. ‖*xalli l-maʃruuɛ*

da ʕal-haamiʃ dilwaqti w-baʕdeen nibḥaṣ-u let's leave this project aside for the time being; we'll discuss it later. - *siib-ak minnu da raagil ʕal-haamiʃ* never mind him, he's nobody!

هامشي *haamiʃi↑* /adj/ marginal. *ʃadwaar haamiʃiyya* bit parts.

همّش *hammiʃ* /vt/ to make notes in the margin(s) of (a book or the like). *hammiʃt ik-kitaab kull-u* I wrote notes in the margins through the whole book. - vn *tahmiiʃ*; ava/pva *mihammiʃ*.

اتهمّش *ʔithammiʃ* /vi/ passive of *ḥammiʃ*. - iva *mithammiʃ*.

[2] ه م ش

همش *hamaʃ (i, u)* /vt/ *[slang]* to gobble up, eat in a hurry. *hamaʃ il-ɤadwa f-sawaani w-ʔaal ma-fii-ʃ ḥaaga taani* he wolfed down the food and asked for more! ‖ *hamaʃuu-ni ʕalʔa suxna* they gave me a good hiding. - vn *hamʃ, hamaʃaan*; ava *haamiʃ*; pva *mahmuuʃ*.

اتهمش *ʔithamaʃ* /vi/ *[slang]* to be bitten, to be eaten up with quick bites. - iva *mithimiʃ*.

انهمش *ʔinhamaʃ = ʔithamaʃ*.

[3] ه م ش see ه م و ش : *hamuuʃ*

ه م ش ر

همشري *hamʃari* /adj pl *-yya*/ **1** huge, colossal. *raagil hamʃari* a gigantic man. **2** generous and expansive.

ه م ط

همط *hamaṭ (u)* /vt/ to guzzle down (soft or semi-liquid food). *nizil fil-manga hamṭ* he guzzled down the mangoes. - vn *hamṭ*; ava *haamiṭ*; pva *mahmuuṭ*.

اتهمط *ʔithamaṭ* /vi/ to be guzzled down. - iva *mithimiṭ*.

همّط *hammaṭ* /vt/ to soften. *ʔil-ʔawwil tittakka ʕal-bitingaana wi-thammaṭ-ha* first you press the eggplant and soften it. - vn *tahmiiṭ*; ava/pva *mihammaṭ*.

اتهمّط *ʔithammaṭ* /vi/ to become or be made soft. *ʔil-martaba thammaṭit* the mattress became floppy. - ava/iva *mithammaṭ*.

ه م ك

همك *hamak (u)* /vt/ to mash, purée (vegetables etc.). - vn *hamk*; ava *haamik*; pva *mahmuuk*.

مهموك *mahmuuk* /adj */ absorbed, deeply involved. *mahmuuk ʕal-faaḍi* busy doing nothing.

اتهمك *ʔithamak* /vi/ to be mashed, be puréed (of vegetables, etc.). - iva *mithimik*.

انهمك *ʔinhamak* /vi/ **1**↑ to become engrossed. *minhimik fi-ɤuɤl-u* absorbed in his work. **2** to be mashed, be puréed. - vn *ʔinhimaak*; ava *munhamik*; ava/iva *minhimik*.

ه م ل

همل *hamal (i)* = *ʔahmal*. - vn *haml, hamalaan*; ava *haamil*; pva *mahmuul*.

اتهمل *ʔithamal* /vi/ to be neglected. *ḥaalit il-mariiḍ saaʔit li-ʔinnu thamal mudda ṯwiila* the patient got worse because he was neglected for a long time. - iva *mithimil*.

انهمل *ʔinhamal = ʔithamal*. - iva *minhimil*.

همّل *hammil* **1** /vt/ to neglect. *kaanit magbuura ʕala ʔinnaha thammil goz-ha ʕaʃaan xaaṭir ɤuɤl-a-ha* she was forced to neglect her husband because of her work. **2** /vi/ to be negligent and careless. *ḥizint' lamma ʃuft-a-ha mhammila f-nafs-a-ha baʕd' ṭalaq-ha* I felt sad to see her neglecting herself after her divorce. - vn *tahmiil*; ava/pva *mihammil*.

اتهمّل *ʔithammil* /vi/ to be neglected. *ʃayy' garḥ' ʔiza thammil ʕurḍa lit-tasammum* any wound, if neglected, is liable to become infected. - iva *mithammil*.

أهمل *ʔahmal* /vt/ to neglect, *ʔahmalit wagib-ha* she neglected her duty. *huwwa muhmil wi-bi-yṭaṣlaq ɤuɤl-u* he's negligent and careless in his work. - vn *ʔihmaal*; ava *muhmil*; pva *muhmal*.

مهملات *muhmalaat↑* /pl n/ waste. *sallit muhmalaat* wastepaper basket.

[1] ه م م

همّ *hamm' (i)* **1** /vt/ to be of interest to, concern. *ma-thimm'-nii-ʃ il-filuus* money doesn't interest me. *ʔilli yhimm-i-ni dilwaqti l-mustaqbal* what concerns me now is the future. *wala yhimm-ak* don't bother about it, don't let it worry you! *ʔilli ma-yhimm-ak waṣṣi ʕalee gooz ʔumm-ak [prov]* you may entrust to the care of your stepfather (only) things you don't care too much about. **2** /vi/ to step up the pace. *himmu f-ɤuɤl-u-ku* move the work! - vn *himma, hamamaan*; ava *haamm, haamim*; pva *mahmuum*.

¶ *hamm' bi-↑* to be about to (do s.th.). *hammu bir-raḥiil* they were about to set off.

همّة *himma* /n/ **1** zeal, spirit. *warrii-ni himmit-ik fil-beet* show me how well you can do in the house. ‖ *ʔabu himma* epithet for an energetic man. - *ʔiʕmil-lak himma* get a move on! hurry up! put some guts into it! **2** /pl *himam*/ strenuous effort (to be helpful to others). *naas ʔaṣḥaab himam* helpful people.

مهموم *mahmuum* /adj */ worried.

همّ *hamm[2]* /n pl *humuum*/ worry, concern, anxiety. *hamm' w-ɤamm* worry and gloom, toil and trouble.

hamm-ak ɛala baṭn-ak all you care about is your belly. ‖*gaa-k hamm* may worry beset you! - *ʃaṭqal mil-hamm[a] ɛal-qalb* intolerable. - *ʃaktar min* (or *zayy*) *il-hamm[a] ɛal-qalb* very numerous. - *riḍiina bil-hamm[i] wil-hamm[i] miʃ raaḍi (biina) [prov]* we put ourselves out but despite that we cannot please (said, e.g., when one offers to marry an ugly girl, and is refused).

أهمّ *ʃahamm* /el/ more/most important.

أهمّيّة *ʃahammiyya* /n/ importance, significance.

هيام *humaam* /adj */ generous in performing services for others, helpful.

مهامّ *mahaamm* /pl n/ (official) duties, tasks.

مهمّ *muhimm* **1** /adj */ important. *mas ʃala muhimma* an important matter. ‖ *ʃil-muhimm* the point is ..., to get to the point .... - *xallii-na fil-muhimm* let us concentrate on what matters.

مهمّة *muhimma* /n pl *-aat*/ task, job. *ʃiṣ-ṣarraaf muhimmit-u ʃinnu ywazzaɛ il-murattabaat* the cashier's job is to hand out the salaries.

مهمّات *muhimmaat* /pl n/ equipment, supplies.

اهتمّ *ʃihtamm* /vi/ to take an interest, be concerned. *ʃil-mudiir faxṣiyyan bi-yihtamm[i] biina* the director himself takes an interest in us. *laazim tihtamm[i] b-sinaan-ak* you must take care of your teeth. - vn *ʃihtimaam*; ava *mihtamm, muhtamm*.

ه م م [2]

همّ *hamm* <Copt> *[children]* **1** /n/ food. **2** /interj/ eat! - also *ʃamm, mam*.

ه م م ا see ه و و ا: *humma*

ه م ه م

همهم *hamham, hamhim* /vi/ to mutter, mumble. - vn *hamhama*; ava *mihamham, mihamhim*.

ه م و ش

هاموش *hamuuʃ* /coll n/ gnat(s), midge(s).

هاموسة *hamuuʃa* /unit n, pl *-aat*/ a gnat, a midge.

هاموسايّة *hamuʃaaya = hamuuʃa*.

ه م ى و ن

هايونى *hamayooni* <P *humâyûn*> **1** /adv/ haphazardly, arbitrarily. *ma-b-titḥaṭṭ[i]-ʃ kida hamayooni* it is not put in just any old way. **2** /n/ ornate style of calligraphy.

ه ن ء see ه ن ى

ه ن ا

هنا *hina* /adv/ here. *taɛaala hina* come here! *baɋa fii min hina maʃaakil kitiir* from that point there were lots of problems. *min hina w-raayiḥ* from now on. ‖*fiḍilt[i] waraa min hina l-hina* (1) I followed him around everywhere. (2) I kept on trying to persuade him in every possible way. - *wi-min hina l-hina* after a lot of effort, after a lot of discussion, as in *ɋaɛadt[i] ʃafaaṣil wi-min hina l-hina xaṣam ɛaʃara saay* I kept on bargaining and after a lot of talk he came down ten piastres. - *hina walla hina* somewhere, as in *ḥa-tlaaɋi fuɣl[i] hina walla hina* you'll find work somewhere. - *wala huwwa hina* he doesn't give a damn, he couldn't care less. - *la hina wala hnaak* of no importance, neither here nor there. - *yaama hina (w-)yaama hinaak* see *yaama*.

¶ *min hina wi-... (min hina)* /correl conj/ as soon as, the moment that, as in *wiṣilna min hina w-ṭabb[i] min hina* no sooner had we arrived than he dropped in, *raaḥ if-fuɣl[i] min hina w-nizilt[a] ɛas-suuɋ min hina* the moment he went to work, I went shopping.

هنا *huna* /adv/: *naḥnu huna* (phrase used by youths in trying to attract the attention of girls on the street). *naḥnu huna ya sitt* phrase used by a husband to his wife, implying that she ignores his authority.

ه ن ا ك

هناك *hinaak* **1** /adv/ there. *ruuḥ hinaak* go there! *yaama hina (w-)yaama hnaak* see *yaama*. *la hina wala hnaak* see *hina*. **2**↑ /part/ there is, there are. *ʃiza kaan hinaak ḥaaga tzaɛɛal-ak* ... if there's anything that annoys you .... *hinaak ṭariɋteen fis-sibaaɣa* there are two methods of dyeing.

ه ن د [1]

الهند *ʃil-hind* /fem prop n/ India. ‖*laffeet is-sind[i] wil-hind* I went everywhere. - *gooz hind* coconut(s). *goozit* or *gozaayit hind* a coconut.

هندى *hindi* /pl *hunuud, hanadwa*/ **1** /adj/ Indian. ‖*manga hindi* smallish green variety of mango. - *miʃmiʃ hindi* large variety of apricot. - *farxa hindi* Indian chicken, a strain of domestic fowl larger than the *farxa baladi* and distinguished by its dark red plumage and long legs and neck. - *ḥaṭab hindi* dry stalks of cotton used for kindling etc. - *maẓaag hindi* hashish. - *yasmiin hindi* pagoda tree, frangipani. - *xaʃab hindi* greenheart. - *ʃaɛiira hindi* variety of barley the seeds of which are used as a laxative. **2** /n/ **2a** an Indian. *hunuud ḥumr* Red Indians. **2b** dupe, fool, fall guy. *ʃinta fakir-ni hindi* do you take me for a fool?

هنادى *hanaadi: ʃil-hanaadi l-milaaḥ* or *ʃil-katakiit il-hanaadi* cries of the vendor of chicks.

ه ن د [2]
هند *hand* (also *handibool*) <Engl *hand*> /n/ *[soccer]* touch foul.

ه ن د ب
هندباء *hindiba* /n/ endive.

ه ن د ز [1]
هندازة *hindaaza* (also *hindaasa*) /n pl *-aat*/ unit of linear measurement equal to 0.656 metres. see further under ه ن د س

ه ن د ز [2]
هندز *handiz* **1** /vt/ to spruce up, make elegant. **2** /vi/ to behave with sensitivity or consideration. *handiz fiwayya* have a heart! - vn *handaza*; ava *mihandiz*.
¶ *handiz ɛala* to check on (s.o. or s.th.). *mif ɛayziin ħadd' yhandiz ɛaleena* we don't want anyone checking up on us.
اتهندز *ʕithandiz* /vi/ (impersonal) passive of *handiz*. *ʕana ma-yithandiz-f' ɛalayya* I am not one whose work is to be checked up on! - iva *mithandız*.

ه ن د س see also ه ن د ز [1]
هندسة *handasa* /n/ engineering. ‖*ʕil-handasa l-miɛmariyya* architecture.
هندسي *handasiˀ* /adj */ **1** pertaining to engineering. ‖*rasm' handasi* technical drawing. **2** geometric.
مهندس *muhandis* (also *muhandiz, mıhandiz*↓) /n */ engineer. ‖*muhandis ṣoot* sound engineer. - *muhandis miɛmaari* architect. - *fuxl' muhandisiin* carefully planned work.
المهندسخانة *ʕil-muhandisxaana* /n/ *[obsol]* the former School of Engineering.

ه ن د م
هندم *handim* /vt/ to dress (s.o.) elegantly. - vn *handama*; ava/pva *mihandim*.
هندام *hindaam* /n/ attire. *kull-u zooq wi-ħusn' hındaam* he's thoroughly polite and well-groomed.
اتهندم *ʕithandim* /vi/ to dress or be dressed elegantly. - vn *tihandiim*; ava/iva *mithandim*.

ه ن ض و م
هنضومة *hanḍuuma* /n pl *hanaḍiim*/ large chunk (of meat). - also *haḍuuma*.

ه ن ك
هنك *hank: hank' w-rank* onomatopoeia for a medley of noise. *ʕil-beet malyaan hank' w-rank* the house is full of brouhaha. ‖*fuxl il-hank' wır-rank* ≈ a bit of slap and tickle (ranging from flirtatious remarks and gestures to the sexual act).

ه ن ك ر
هنكر *hankar* /vi/ to potter about, mess about, be busy doing nothing. *taɛaala niskar w-nhankar* come on, let's get drunk and mess about a bit! - vn *hankara*; ava *mihankar*.
هنكار *hinkaar* /adj/ one who busies himself doing nothing.

ه ن م see ه ا ن م: *haanim, hawanmi*

ه ن ن
هنن *hannin* /vt/ to rock and sing (a baby) to sleep. - also *hanhin*. - vn *tahniin*; ava *mihannin*.
اتهنن *ʕithannin* /vi/ to be rocked and sung to sleep (of a child). - also *ʕithanhin*. - iva *mithannin*.

ه ن ه ن
هنهن *hanhin* /vt/ to rock and sing (a baby) to sleep. - also *hannin*. - vn *hanhana*; ava/pva *mihanhin*.
اتهنهن *ʕithanhin* /vi/ to be rocked and sung to sleep (of child). - also *ʕithannın*. - vn *tihanhiin*; ava/pva *mithanhin*.

ه ن ى
هنى *hini (a)* /vi/ to give pleasure or gratification. *ʕil-xurba ma-hinyit-f' lu* being away from home brought him no joy or satisfaction. *kull illı tiɛmil-u yihnaa-li* everything you do gives me pleasure. - vn *hana*; ava *haani*.
هنا، هناء *hana* /n/ well-being, good health, happiness. ‖*baɛd il-hana b-sana [prov]* after the appropriate time. - *bil-hana wif-fifa* ≈ I'm glad you have enjoyed (or: are enjoying) it! (response to compliment on food). - *ɛariis il-hana* the right man, Mr. Right, Prince Charming. ... *il-hana* may ... bring you wellbeing, as in *noom ıl-hana* have a good sleep! *mifwaar il-hana* have a pleasant outing! *xabiiz il-hana* (may the bread you bake bring good health) ≈ happy baking! - *ya hanaa(-k) law* ... how happy (you) would be if ..., as in *ya hanaa-ya law zurt-i-ni* how happy I would be if you were to visit me!
هنى، هنيء *hani* /adj/ enjoyable, pleasant. *ʕayyaam haniyya* happy days. *ʕıl-luqma l-hanıyya tkaffi miyya [prov]* (even) a piece of bread eaten in a friendly atmosphere suffices for a hundred.

¶ *haniyyan* ≈ good health! (said, e.g., to a guest who has just finished eating or drinking). - *haniyyaa-(lak)* how good it is for (you)! *ʕin taab haniyyaa-lu* how fortunate he would be if he repented! *haniyyaa-lak ya faaʕil il-xeer (wis-sawaab ʕand allaah) [beggars]* how blessed are you who give charity (for God will reward you).

هنّى، هنّأ *hanna* **1** /vt/ **1a** to make happy. *gooz-i mhannii-ni* my husband does all I could desire to make me happy. *ʕil-farah ga w-hannaa-ni* joy has come and gladdened me. *la mhanni wala mʃanni* giving no joy whatsoever. ‖ *ma-hannaa-(nii)-ʃ ʕala* ... (he) prevented (me) from enjoying ..., as in *ʕil-ʕiyaal ma-hannu-naa-ʃ ʕan-noom ʕimbaarih* the kids didn't let us have a good sleep last night, *faat ʕaleena saaʕit il-ɣada w-ma-hannaa-naa-ʃ ʕalee* he stopped in at lunch time and (so) didn't let us enjoy it. **1b** to grant good health to (of God). *ʕallaah yihannii-k* response to *bil-hana* (q.v.) and *haniyyan* (q.v.). **2** to congratulate. - vn *tahniyya*; ava/pva *mihanni*.

تهانى، تهانٍ *tahaani* /pl n/ congratulations, felicitations. *tilliɣraaf tahaani* a congratulatory telegram. *ʕaddimnaa-lu t-tahaani* we offered him congratulations.

اتهنّى *ʕithanna* /vi/ to be made or become happy. *ʕithanni* rejoice! *tiʕiif wi-tithanna* may you live long and be happy! *ʕilli waaxid ʕaql-ak yithannaa-bu [joc]* may he who has stolen your mind be made happy by it! (to one who is daydreaming, apparently of his beloved). - ava/iva *mithanni*.

استهنّى *ʕistahanna↓* = *ʕithanna*. - ava/iva *mistihanni*.

ه ه

هاء *hih* /fem n, pl *-aat*/ twenty-sixth letter of the Arabic alphabet. - also *haa, haaʕ, heeh*.

ه و see ه و و ا: *huwwa*

ه و ب

هوّب *hawwib* /vi/ to approach, go near. *ʕiyyaa-k tihawwib naḥyit il-baab* don't you dare go near the door! *ma-txallii-ʃ il-ʕayyil yihawwib naḥyit il-furn* don't let the child go near the stove! *hawwib bi-ʕaṣaayit il-ʕizz' wala tiqrab biiha [prov]* ≈ it's better to command respect for one's power than actually to use it. - vn *tahwiib*; ava *mihawwib*.

ه و ج see also ه ى ج

هوجة *hooga* /n pl *-aat*/ **1** confusion, commotion. *ʕig-gamʕiyya n-nahar-da hooga* the co-operative is bedlam today. **2** uprising, insurrection. *hoogit ʕuraabi* the Urabi uprising.

أهوج *ʕahwag* /adj, fem *hooga*, pl *huug*/ rash, reckless.

ه و ج ل

هوجل *hoogal* <Copt> /n pl *hawaagil*/ flail (for threshing).

ه و د ¹

هاود *haawid* /vt/ to go along with, be reasonable with. *hawid-ni fis-siʕr* he was reasonable with me over the price. *ma-yhawid-nii-ʃ fi-ḥaaga* he won't go along with me in anything. - vn *mihawda, hawaada*; ava *mihaawid*.

هوادة *hawaada* /n/ gentleness. *tismaḥ tikkallim bi-hawaada mʕaaha li-ʕinnaha ḥassaasa qawi* will you talk gently to her, for she's very sensitive.

اتهاود *ʕithaawid* /vi/ **1** to be reasonable. *raagil ṭayyib wi-mithaawid maʕa n-naas fi-kull[a] ḥaaga* a good type who goes along with people in everything. *bi-yithaawid fis-siʕr* he's flexible over the price. **2** to be gone along with. *ʕil-ʕiyaal ma-tithawid-ʃ' f-ʕayy' ḥaaga tuṭlub-ha* children are not to be given in to every time they ask for something. ‖ *raagil ma-yithawid-ʃ' ʕala ʕaql-u* a naive man. - ava/iva *mithaawid*.

متهاود *mithaawid, mutahaawid↑* /adj/ low, moderate (of price). *bi-ybiiʕu b-siʕr' mithaawid ʕan siʕr is-suuq* they sell at a price lower than that of the market.

ه و د ² see also ى ه و د

هوّد *hawwid* /vt/ **1** to convert (s.o.) to Judaism. **2** to Judaize. - vn *tahwiid*; ava/pva *mihawwid*.

اتهوّد *ʕithawwid* /vi/ **1** to convert or be converted to Judaism. **2** to be Judaized. - ava/iva *mithawwid*.

ه و د ج

هودج *hoodag* /n/ camel litter.

ه و ر ¹

اتهوّر *ʕithawwar* /vi/ to behave recklessly. *bi-yithawwar fis-siwaaqa* he drives recklessly. - vn *tahawwur*; ava *mithawwar, mutahawwir*.

متهوّر *mutahawwir↑* /adj */ rash, reckless, irresponsible.

ه و ر ²

انهار *ʕinhaar* /vi/ to fall apart, collapse. *ʕil-ʕimaara nhaarit* the building collapsed. *lamma ʃuft il-ḥadsa ʕinhart* when I saw the accident I went to pieces. - vn *ʕinhiyaar*; ava *minhaar*.

انهيار ʔinhiyaar /n pl -aat/ breakdown. ʔinhiyaar ɛaṣabi nervous breakdown.

ه و ر ³

هوّارة hawwaara /prop n/ Hawwara, a bedouin tribe in Upper Egypt. iẓ-ẓarṭ' lil-hawwaara wiḍ-ḍarb' lil-fallaḥiin [prov] the Hawwara fart and the peasants get punished for it.

ه و س ¹

هوس hawas (i) /vt/ to drive (s.o.) to the point of madness. ḥabbet-ha ɋawi bi-fakl' yihwis I loved her to distraction. ɋal-li nukta hawasit-ni mid-diḥk he told me a joke which almost killed me with laughter. - vn hawsa, hawasaan; ava haawis; pva mahwuus.

هوسة hawsa /n/ bedlam. baṭṭalu l-hawsa di stop that noise! ‖ bint' hawsa a maddeningly beautiful girl. - hiyya ɛamlaa-li hawsa f-muxx-i she's driving me wild (e.g., with passion). - wil-hawsa di kull-a-ha and all that jazz, as in ɋaɛadna nitkallim fil-ʔadab wil-fann' wil-hawsa di kull-a-ha we sat talking of literature and art and all that jazz.

مهووس mahwuus /adj * and pl mahawiis/ foolish, crazy. ma-taxud-ʃ' ɛala kalaam-u da raagil mahwuus don't take what he says seriously; he's completely dotty.

أهوس ʔahwas /el/ more/most crazy. ‖ṣaḥiiḥ hiyya bint' hawsa laakin ʔuxt-a-ha ʔahwas minha it's true that she's maddeningly pretty, but her sister is (even) more beautiful!

اتهوس ʔithawas /vi/ 1 to go mad, become insane. 2 to be driven mad. - ava/iva mithiwis.

انهوس ʔinhawas = ʔithawas. - iva minhiwis.

ه و س (²)

هوس hoos <Copt> /n pl -aat/ [Chr] hymn. ‖ ʔil-ʔarbaɛ hosaat four hymns taken from the Old Testament.

هويس hawiis /n pl hiwíṣa, ʔahwisa, hawisaat/ (river or canal) lock.

ه و ش

هوّاش hawwaaʃ /n */ one who puts on a show in order to deceive.

هوّس hawwiʃ /vt/ 1 to put on a show in order to deceive. ʔil-mudiir hawwiʃ-ni wi-ɛtaraft the director bluffed me (with threats he did not intend to carry out) into confessing. 2 to make unstable, make confused. gamal-ha hawwiʃ ɛaɋl-i her beauty drove me crazy. ʔafkaar mihawwiʃa woolly ideas. - vn tahwiiʃ; ava mihawwiʃ.

تهويشة tahwiiʃa /inst n, pl -aat, tahawiiʃ/ a bluff.

مهوّشاتي mihawwiʃaati /n pl -yya/ one who puts on a show in order to deceive.

اتهوّش ʔithawwiʃ /vi/ passive of hawwiʃ. - iva mithawwiʃ.

ه و ك ى

هوكى hooki <Engl> /n/ hockey.

ه و ل

هول hool /n pl hawaayil, ʔahwaal/ overwhelming terror. min hool il-muṣiiba ʔuɤma ɛaleehum they were so overwhelmed by the disaster that they fainted. fufna l-hawaayil we saw awful things. ‖ ʔabu l-hool the Sphinx. lamma ʔabu l-hool yinṭaq [prov] when the Sphinx speaks (i.e. never).

أهيل ʔahyal /el/ more/most wonderful or marvellous.

هايل، هائل haayil /adj */ wonderful, marvellous. fikra hayla a fantastic idea. manẓar haayil a wonderful scene.

هوايل hawaayil /pl n/ awesome things. fufna l-hawaayil we've seen shocking things. ‖ yisawwi l-hawaayil (he) works wonders.

مهول mahuul /adj */ awesome, fantastic. fikra mahuula a marvellous idea. ʔakl' mahuul fantastic food. ṭarabeeza mahuula a colossal table.

هوّل hawwil /vt/ to exaggerate, blow up, make a big fuss about. xilaaf basiiṭ wi-hawwil-u (it was just) a minor disagreement and he made a big thing of it. - vn tahwiil; ava mihawwil.

اتهوّل ʔithawwil /vi/ to be exaggerated, be blown up, be made a big fuss over. - iva mithawwil.

استهول ʔistahwil /vt/ to consider overwhelming. ʔinta mistahwil il-ḥikaaya ɛal-faaḍi there is no reason for you to consider the matter so enormously difficult. - vn ʔistihwaal; ava mistahwil.

ه و ن ¹

هان haan' (u) /vi/ 1 to become of little value, become insignificant. ʔid-dinya haanit ɛalayya everything seemed pointless to me. ʔahuun ɛaleek am I nothing to you (that you should treat me like this)? ma-thun-ʃ' ɛalayya ʔasib-ha she means too much to me for me to leave her. kull-u yhuun fi-xidmit ig-gumhuur all difficulties are as nothing in the service of the public. miʃ haayin ɛalee ʔinn... it is no easy matter for him to .... ʔil-ɛiʃra ma-thun-ʃ [prov] intimacy should not be lightly betrayed. 2 to near the end, draw towards a close (espe-

cially of s.th. arduous). *xalaaṣ il-miʃwaar haan* be patient, the journey is nearly over. *haanit xalaaṣ* it's almost over. - ava *haayin*.

هان *haan*[2] *(i)* /vt/ to insult, humiliate, debase. *min haan-ak hiin-u [prov]* insult him who insults you. *hiin ʠirf-ak wala thiin nafs-ak [prov]* it's better to hurt your wallet than yourself. - /the literary passive occurs/ *yoom l-imtiḥaan yukram il-marʕ*[i] *ʃaw yuhaan [prov]* on examination day one is either honoured or humiliated ≈ it is through trial that each man's worth is discovered. - ava *haayin*.

هيّن *hayyin* /adj/ **1** easy, simple. *ʃuɣl*[i] *hayyin* easy work. **2** trivial, slight, insignificant. *maʃaakil hayyina* trivial problems.

أهون *ʃahwan* /el/ **1** more/most easy or simple. **2** more/most trivial or insignificant. *tiigi ɛala ʃahwan sabab* ≈ great things (may sometimes) take place for insignificant reasons.

هوان *hawaan* /n/ degradation. *ma-yiʠbal-ʃ il-hawaan ɣeer il-ɛabiid [prov]* none but slaves will accept degradation.

هويّن *huwayyin, hiwayyin* /adj */ **1** easy, simple. **2** insignificant, trivial.

مهانة *mahaana* /n/ degradation.

اتهان *ʃithaan* /vi/ to be humiliated, be brought low. *ʃawlaad-i gaaɛu wi-thaanu* my children were reduced to hunger and humiliation. - iva *mithaan*.

انهان *ʃinhaan* = *ʃithaan*. - iva *minhaan*.

هوّن *hawwin* /vt/ to ease, make bearable. *ʃallaah yihawwin il-muṣiiba ɛaleek* may God make the misfortune easy for you! - vn *tahwiin*; ava *mihawwin*.

مهوّن *mihawwin* /n/ Easer (epithet of God). *ya mhawwin (hawwin)* (O God, grant relief!) ≈ whenever shall (I) see the end of all this! (said in suffering or frustration).

أهان *ʃahaan* = *haan*[2]. - vn *ʃihaana*; ava *muhiin*.

إهانة *ʃihaana, ʃahaana* /n pl *-aat*/ **1** insult. ‖ *wiff*[i] *ʃihaana* one worthy of rebuke. **2** hard and menial work.

اتهاون *ʃithaawin* /vi/ to be lax, be heedless. *ʃil-ɛaskari thaawin maɛaana* the policeman let us off. - ava *mithaawin*.

استهون *ʃistahwin* /vt/ **1** to consider easy. **2** to select for ease or easiness. - vn *ʃistihwaan*; ava *mistahwin*.

¶ *ʃistahwin bi-* to consider insignificant, underestimate. *bi-tistahwin bii* you don't realise its true worth.

استهان *ʃistahaan*: *ʃistahaan bi-* to consider insignificant, underestimate. - (the literary passive occurs) *da raagil ma-yustahan-ʃ*[i] *bii* this man is not to be taken lightly, this is a man to be reckoned with. - vn *ʃistihaana*; ava *mistihiin, mustahiin*↑.

ه و ن[2]

هاون *hoon* /n pl *hiwína, ʃihwaan*/ mortar. *ʃiiḍ hoon* pestle.

هاون *hawin* (also *madfaɛ hawin*) /n pl *-aat*/ *[mil]* mortar.

ه و ه

هوه *huuh: ya huuh* **1** (also *ya salaam ya huuh* or *ya naas ya huuh*) intensifying exclamatory expression. *ya huuh ɛal-gamal-da* wow! how beautiful! *ya huuh ɛala dammak* how clumsy of you! *ya naas ya huuh miʃ kida* for Heaven's sake, stop it! **2** everyone! anyone! (a call, for help). *ʃilḥaʠuu-na ya huuh* help, anyone!

ه و ه و

هوهو *hawhaw* /vi/ to bark. ‖ *lamma thawhaw* (not even) if you (should) bark (i.e. never). - vn *hawhawa*; ava *mihawhaw*.

ه و و

هوّ *hiww* /n/ void. *wiʠiɛ min iṭ-ṭayyaara lil-hiww* he fell out of the aeroplane into the void. *saakin fil-hiww* living in the back of beyond, living at the ends of the earth. - /adjectivally/ *ʃaggart*[i] *ʃooḍa hiww*[i] *mutt*[i] *fiiha milbard* I rented a big draughty room in which I (practically) froze to death.

هوّة *huwwa*[1], *hiwwa* /n pl *-aat*/ chasm, abyss.

ه و ا

هوّ *huwwa*[2] /fem *hiyya*, pl *humma*/ **1** personal pronoun of the 3rd person. *huwwa (hiyya, humma) hina* he is (she is, they are) here. *ma-huwwaa-ʃ* or *ma-huu-ʃ (ma-hiyyaa-ʃ* or *ma-hii-ʃ, ma-hummaa-ʃ* or *ma-hum-ʃ*[i]*) hina* he is (she is, they are) not here. ‖ *miʃ huwwa* /w masc referent/, *miʃ hiyya* /w fem referent/ not as it ought to be, as in *ṭaɛm-u miʃ huwwa* it doesn't taste as it should, *ṭariiʠa miʃ hiyya* an improper way, an incorrect method. - *huwwa huwwa* /w masc referent/, *hiyya hiyya* /w fem referent/, *humma humma* /w pl referent/ (1) the self-same, as in *ʃik-kalaam bi-yixtilif laakin il-maɛna huwwa huwwa* the wording may vary, but the meaning is just the same, *ʃil-ɛarabiyya hiyya hiyya lli ga fiiha mbaariḥ* it's the very same car that he came in yesterday, *rigiɛt*[i] *baɛd*[i] *sana w-laʠeet il-giraan humma humma* I went back a year later and found the same neighbours (as I'd known before). (2) the exact replica, as in *ʃiftareet ʠamiiṣ huwwa huwwa lli ɛaleek* I bought a shirt exactly like the one you're wearing, *ʃil-mooḍa btaaɛit is-sanaa-di hiyya hiyya btaaɛit il-xamsinaat* the fashion this year is just the same as that of the fifties,

ʕiṭ-ṭalaba humma humma laakin gibna mudarrisiin ziyaada we have the same number and type of students but we have increased the number of teachers. **2** /emphatic pron of the 3rd person/ **2a** emphasizing a preceding noun. ɛali huwwa lli xad-u it was Ali who took it. ʕumm-i hiyya lli ɤayba it's my mother who's not here. ʕil-ɛummaal humma lli ʃtaku it's the workmen who complained. **2b** emphasizing a preceding suffix. *da beet-u huwwa miʃ beet* ʕaxuu it's his house, not his brother's. *ʃuft-a-ha hiyya miʃ ıs-sikrittira btaɛit-ha* I saw her personally, not just her secretary. *ʕil-ɛarabiyya btaaɛit-hum humma* it's their (own) car. **3a** introductory signal to a subject referent. *huwwa l-bilastik ɛandina noɛeen* we have two kinds of plastic. *hiyya ʕamiira raaḥıt feen* where has Amira gone? *humma maɛaak il-ʕawlaad* are the children with you? **3b** introductory particle emphasizing a following demonstrative. *huwwa da s-su ʕaal illi mafruuq yitsiʕil* that is the question that should be asked. *hiyya di l-muʃkila* that is the problem. *humma dool illi gum ʕimbaariḥ* they are the people who came yesterday. — */huwwa* only/ **4** interrogative particle signalling surprise or mild disbelief. *huwwa ma-fii-ʃ ḥadd' guwwa* is there nobody inside? *huwwa s-sittaat bi-tifham* do women really understand (anything)? *huwwa-nta liik ḥaqq' tikkallim* do you (really) have the right to speak?

ه و ى [1]

هوى *hawa[1] (a)* /vt/ to be devoted to, have a passion for. *ʕana b-ahwaa-ha* I'm crazy about her. *ʕana b-ahwa gamɛ iṭ-ṭawaabiɛ* I have a passion for collecting stamps. -vn *hawa, hiwaaya*; ava *haawi*.

هوى *hawa[2]* /n/ **1** love. ‖ *ʕahl il-hawa* lovers. -*banaat il-hawa* prostitutes. **2** temperament, inclination. *ɛala hawaa-* as ... likes, as in *ʕimʃi ɛala hawaa-k* do as you please! *siib-u ɛala hawaa lamma yiigi ɛala ɋafaa [prov]* ≈ give a thief enough rope and he'll hang himself. *ʕiʃ-fuɤlaana gat ɛala hawaa-ya* the job was to my liking. ‖ *hawaa-hum ga ɛala baɛḍ* they hit it off together.

هواية *hiwaaya* /n pl *-aat*/ hobby, pursuit. *ɕeed iṣ-ṣaqr' di hwaayit il-muluuk* falconry is the hobby of kings. *hiwayaat riyaḍiyya* athletic activities.

هاوى *haawi[1]* /n pl *huwaah*/ enthusiast, amateur, hobbyist.

استهوى *ʕistahwa[1]* /vt/ to catch the fancy of, appeal to. *ʕir-raqṣ' b-yistahwii-ni* dancing appeals to me. -ava *mistahwi*.

ه و ى [2]

هوا، هواء *hawa[3]* /n/ **1** air. *fil-hawa ṭ-ṭalq* in the open air. *bi-yʃimm il-hawa* he takes a breath of fresh air. ‖ *kalaam fil-hawa* empty talk. -*filuus-u raaḥit fil-hawa* his money was used up fruitlessly. -*ɛala l-hawa* (1) *[broadcast]* on the air. (2) precariously, as in *waaqif ɛala l-hawa* precariously balanced. -*ɛaayiʃ ɛala l-hawa* living on thin air. **2** breeze, wind. *ʕil-hawa ʃdiid* the wind is strong. ‖ *ʕiḥna fil-hawa sawa* (1) we're inseparable friends. (2) we're in the same boat together. -*wiqiɛt' walla l-hawa ramaa-k [prov]* ≈ 'Welcome to my parlour', said the spider to the fly! **3** cold chill. *xad hawa f-miɛdit-u* he got a chill on the stomach. **4** *[auto]* choke. — /adv/ **5** quickly. *ḥ-aṭbux hawa* I'll cook quickly. *taɛaala hawa* come as fast as you can!

أهوى *ʕahwa* /el/ more/most airy.

هوائى *hawaaʕi* /adj/ **1** in the air, aerial. *kablaat hawaʕiyya* overhead cables. **2** whimsical, capricious. — /n pl *hawaʕiyyaat*/ **3** aerial.

هوّاية *hawwaaya* /n pl *-aat*/ air vent, ventilator.

هاوى *haawi[2]* /adj/ airy. *ʕooḍa hawya* airy room.

هوّى *hawwa* /vt/ **1** to air, air out, ventilate. *ḥaṭṭit il-farʃ' fil-balakoona ɛafaan tihawwii* she put the bedclothes on the balcony to air them. *ʕiftaḥ iʃ-ʃibbaak wi-hawwi l-ʕooḍa* open the window and air out the room. ‖ *hawwii-na* push off! **2** to let air out of, deflate. *ʕil-ɛagalaati bi-yhawwı l-ɛagala l-manfuuxa ɋawi* the bicycle man deflates the over-pumped tyre. **3** to loosen. *ʕana mhawwi ṣ-ṣawamiil* I'm loosening the nuts. *hawwa l-ḥizaam baɛd il-ʕakl* he loosened his belt after eating. ‖ *ʕil-muṣiiba hawwit masamiir muxx-u* the disaster sent him dotty, the disaster left him with a screw loose. -*hawwii-lu* ≈ let him brag, what harm does it do (said to stop interference with someone who is telling exaggerated tales). — /vi/ **4a** to become deflated. *ʕil-ɛagala hawwit* the tyre went flat. ‖ *ɛaql' mihawwi* featherbrain, twit. -*geeb-i mhawwi* my pocket's cleaned out, I'm penniless. **4b** to fart. **5** to become loosened. *ṣamuula mhawwiyya* a loose nut. -vn *tahwiyya*; ava/pva *mihawwi*.

اتهوّى *ʕithawwa* /vi/ **1** to get an airing. *ḥ-aṭlaɛ ʕathawwa ʃwayya* I'm going out for a breath of air. ‖ *ʕithawwa* shove off! **2** passive of *hawwa*. -ava *mithawwi*.

استهوى *ʕistahwa[2]* /vi/ to catch a chill, catch cold. ‖ *ya lahw-i ya mistahwi [women in trad soc]* ≈ what a mess you've made of that, you good-for-nothing! (mildly insulting exclamation used in badinage). -ava *mistahwi*.

ه ى ء

هيئة *hayʕa* /n pl *-aat*/ **1** organized body, institution.

hayʕit il-maktab the office staff. *hayʕit il-bariid* the Post Office Organization. *hayʕaat ɛilmiyya* academic organizations. *hayʕit taḥriir* editorial board. **2** form, shape. *hayʕit-ha ʕeeh* what does it look like? *damm[i] naazil ɛala hayʕit sarsuub* blood coming out in a trickle. ‖ *kaff[i] ḥayʕa* inspection of presentability and bearing (e.g., at military academies).

هيّأ *hayyaʕ* /vt/ **1** to prepare (mentally and physically). *laazim il-waaḥid yihayyaʕ nafs-u lif-fuɤl* one must prepare oneself completely for work. **2** to put in good shape, give a good finish to. *ʕin-naqqaaf faṭṭab il-beet wi-hayyaʕ-u* the decorator put the finishing touches to the house and made a good job of it. ‖ *ʕiddenaa-lu ɛalqa hayyaʕit-u* we gave him a beating that really worked him over. - vn *tahyiiʕ*; ava/pva *mihayyaʕ*.

اتهيّأ *ʕithayyaʕ* /vi/ **1** to be prepared (mentally and physically). **2** to be put in good shape, be given a good going-over. **3** it seemed apparent, it appeared. *ʕithayyaʕ-li ʕinn[i] gittit-i kull[i] ḫitta rayḥa f-naḥya* I felt as though each piece of my body had gone a different way. *bi-yithayyaʕ-lu ʕinnu saakin li-waḥd-u fil-kura l-ʕarḍiyya* he imagines he's the only man on earth. *ʕinṭasseet fi-naẓar-i yoom ma thayyaʕ-li ʕinn[i] hawaa-ya yiigi ɛala hawaa-ha* I was blind the day I thought I could hit it off with her. *ʕana mithayyaʕ-li ʃuft[a] ḥaḍrit-ak qabl[i] kida* it seems to me I've seen you before. ‖ *yithayyaʕ-li ʕaquum ʕahiff-u qalameen nuḍaaf* I feel like giving him a good beating. - vn *tahayyuʕ*; ava/iva *mithayyaʕ*.

تهيّؤات *tahayyuʕaat* /pl n/ delusions, fantasies. *ma-tsaddaquu-ʃ - di kull-a-ha tahayyuʕaat* don't believe him; these are all delusions (of his).

استهيّأ *ʕistahayyaʕ* ↓ = *ʕithayyaʕ* 3. - ava *mistahayyaʕ*.

ه ى ب

هاب *haab (a, i)* /vt/ to feel respect and fear for. *b-ahaab ʕabuu-ya* I've a healthy respect for my father. - vn *hayabaan, heeba*; ava *haayib*.

هيبة *heeba* /n/ respect, veneration. *lu heeba f-ʃuɤl-u* he is respected at work. *raagil ɛalee heeba* a man whose appearance commands respect. *ʕil-malik min hebt-u b-yinfiṭim fi-ɤebt-u [prov]* because of his imposing presence a king is abused (only) in his absence ≈ a criticism given in one's absence may be a sign of veneration.

مهابة *mahaaba = heeba*.

مهاب *muhaab* /adj */ treated with respect and obedience. *huwwa muhaab fi-beet-u* he is respected and obeyed in his household.

اتهيّب *ʕithayyib* /vt and vi/ to fear, feel afraid of. *kull-i-na thayyibna (min) manẓar-u lamma wiqif quddamna yiwɛiẓ fiina* we all felt awe-struck as he stood before us preaching. - vn *tahayyub*; iva *mithayyib*.

ه ى ج

هاج *haag (i)* /vi/ **1** to become wild and violent, go berserk. *lamma ygii-lu d-door yihiig* when the fit seizes him, he goes berserk. *ʕil-baḥr[i] haag* the sea became rough. **2** to become sexually aroused. - vn *hayagaan, hiyaag, hayaag*; ava *haayig*.

هيّج *hayyig* /vt/ to arouse, excite (emotionally or sexually). *hiyya b-tilbis kida min baab it-tahyiig* she dresses like that to stimulate passions. - vn *tahyiig*; ava/pva *mihayyig*.

اتهيّج *ʕithayyig* /vi/ to be aroused, be excited (emotionally or sexually). - vn *tahayyug*; iva *mithayyig*.

ه ى د

ه ى د see [2] ه د د

ه ى ر

ه ى ر see [2] ه و ر : *ʕinhiyaar*

ه ى ر غ –

هيروغليفي *hiiruɤliifi, hiruɤliifi* **1** /n/ hieroglyphics. ‖ *bi-yitkallim hiruɤliifi* he speaks double-Dutch. **2** /adj/ hieroglyphic. *ʕil-xaṭṭ il-hiruɤliifi* hieroglyphic calligraphy.

هيروغليفيّة *hiiruɤliifiyya, hiruɤlifiyya* /n/ hieroglyphics.

ه ى ش

هاش *haaf (i)* /vi/ to become fluffy. *niqrab is-sukkar wis-samn[i] l-ḥadd[i] ma yibqa haayif* we beat the sugar and butter until it becomes fluffy. - vn *hayaʃaan*; ava *haayif*.

هيّش *hayyif* **1** /vt/ to make fluffy. *ʕir-riiḥ hayyif ʃaɛr-a-ha* the wind fluffed out her hair. **2** /vi/ to grow wild (of trees, grass, hair etc.). *saab daqn-u tiṭwal li-ḥadd[i] ma hayyifit* he let his beard grow until it was really shaggy. - vn *tahyiif*; ava/pva *mihayyif*.

اتهيّش *ʕithayyif* /vi/ to be made fluffy. - iva *mithayyif*.

ه ى ص

هاص *haaṣ (i)* /vi/ to become uproarious. *ʕil-malɛab haaṣ* the playing field erupted in pandemonium. *wi-kaan il-faraḥ haayiṣ li-ḥadd iṣ-ṣubḥ* the wedding party continued uproariously till the morning. ‖ *ʕil-ḫikaaya haaṣit* the affair got out of hand. - vn *heeṣa, hayaṣaan*; ava *haayiṣ*.

¶ *haaṣ fi-* to let fly at (s.o.). *haaṣ fiyya ʃtiima* he let fly at me with insults.

هيصة *heeṣa* /n pl *-aat*/ row, commotion. ‖*wi-heeṣa* and all the rest of it, and so on, as in *bi-yaaxud badal tamsiil kibiir wi-ɛarabiyya w-heeṣa* he gets a big expense-allowance, and a car and the whole works.

مهياص *mihyaaṣ* /n/ rowdy and raucous person. see further under م ه ى ص

هيّص *hayyaṣ* /vi/ **1** to make a commotion. *lamma l-mudarris yiṭlaɛ mil-faṣl il-ɛiyaal bi-yhayyaṣu* when the teacher leaves the classroom, the kids raise Cain. **2** to enjoy oneself, indulge in boisterous fun. *ya reet kunt' zayy' baqiit ig-gidɛaan illi bi-yhayyaṣu w-yidḥaku* I wish you were like the rest of the lads who horse around and laugh. *ḥa-niskar wi-nhayyaṣ* we'll get drunk and paint the town red! - vn *tahyiiṣ*; ava *mihayyaṣ*.

مهيّصاتى *mihayyaṣaati* /adj pl *-yya*/ boisterous, rowdy (of people).

ه ى ف

هاف *haaf (i)* /vi/ **1** to be petty, be trivial. *huwwa haayif ma-yiɛraf-f' yikkallim fi-ʔayy' mawḍuuɛ* he's trivial, unable to talk about any subject. **2** to be unable to get one's share. *kull-u-hum ʃaṭṭabu ɛal-ʔakl' w-ma-fii-f ʔilla ʔana ʔilli hift' f-wisṭii-hum* they all wolfed down the food and I was the only one among them to miss out. - vn *hayaafa, hayafaan*; ava *haayif*.

هيافة *hayaafa* /n pl *-aat*/ triviality.

أهيف ʔ*ahyaf* **1** /el/ more/most trivial, feather-brained etc. **2** /n/ *[slang]* pound (money). *ʔil-ɛarabiyya ʔumm[a] xamast alaaf ʔahyaf* the five-thousand quid car.

هيّف *hayyif* **1**/vt/ to cause (s.o.) to lose his share. *hayyift-i-ni mil-ɤada* you made me miss the dinner. **2** /vi/ to miss, fall short. *ʔil-bunduqiyya hayyifit* the rifle misfired. *bi-yhayyif fil-ʔakl* he's a poor eater. - vn *tahyiif*; ava/pva *mihayyif*.

استهيف *ʔistahyif* /vt/ **1** to regard as trivial. **2** to select for triviality. *ʔistahyifit laha raagil wi-tgawwizit-u ɛaʃaan timaʃʃii ɛala kef-ha* she chose to marry a nobody so that she could keep him under her thumb. — /vi/ **3** to behave in a childish manner. - vn *ʔistihyaaf*; ava/pva *mistahyif*.

ه ى ك ل

هيكل *haykal* /n pl *hayaakil*/ **1** internal structure, frame. *haykal ɛaẓmi* skeleton (of a body). *haykal ṭayyaara* framework of an aeroplane. *haykal l-ittiḥaad l-iʃtiraaki* the structure of the Socialist Union. **2** dummy.

هيكل *heekal* /n pl *hayaakil*/ *[Chr]* sanctuary (of a church).

[1] ه ى ل

هال *haal (i)* /vt/ to pile, heap up. *haalu ɛalee t-turaab* they piled the earth over him. - vn *hayalaan*; ava *haayil*.

اتهال *ʔithaal* /vi/ to be piled, be heaped up. - iva *mithaal*.

انهال *ʔinhaal* = *ʔithaal*. - iva *minhaal*.

[2] ه ى ل see ه و ل: *ʔahyal, haayil, hawaayil*

ه ى ل ا

هيلا *heela* <prob Copt> /interj/: *heela hubb, heela hubba* heave! heave ho! *ʃaal-(u) heela beela* he hustled (him) off.

ه ى ل ى ف

هايلايف *haylayif* <Engl *high life*> /adj invar/ upper-class. *b-yiɛtibir nafs-u min in-naas il-haylayif* he thinks he's upper-class.

ه ى م

هام *haam (i)* /vi/ to be distracted (especially by thoughts of one's beloved). *b-ahiim bi-ʔafkaar-i fil-maḥbuub* I am distracted by thoughts of my beloved. - vn *hayaam, hayamaan*; ava *haayim*.

هيمان *haymaan*[↑] /adj */ infatuated, madly in love. *ʔana haymaan fi-ɛaalam il-fann' wil-gamaal* I feel I am lost in the realm of art and beauty!

ه ى م ن

هيمن *haymin* /vi/ to preside, exercise control. *mafruuḍ ʔinn il-mudarris yihaymin ɛala faṣl-u* the teacher is supposed to control his class. - vn *haymana*; ava *mihaymin*.

مهيمن *muhaymin* /n/ Controller (epithet of God).

ه ى ن see [1] ه و ن: *hayyin*

(ه ى ه)

هيه *heeh*[1] /fem n, pl *-aat*/ twenty-sixth letter of the Arabic alphabet. - also *haa, haaʔ hih*.

هيه *heeh*[2] /interj/ hurrah!

ه ى ى ا see ه و و ا: *hiyya*

و

و

و *wi-, wa-* **1** /conj/ and. *ʃuraab ʃaḥmar wi-fanilla beeḍa* red socks and a white jersey. *wi-ʃeeh - miʃ ɛagb-u* and what's more, he doesn't like it. ‖ *wi-ʃeeh yaɛni* so what! **2** particle introducing an oath. *wi-ḥayaat-ak* by your life! *w-allaahi* by God! **3** particle introducing a circumstantial clause. *ya reet tigii-ni fluus w-ana ɋaaɛid kida* I wish I could get money while just sitting down like this. *ʈuul ɛumr-i w-ʃana nifs-i f-ɛarabiyya* all my life I've wanted a car.

¶ (pron) *wi-...* (suff) it depends on ..., as in *ʃinta w-ḥaẓẓ-ak* it depends on your luck, *huwwa w-mazaag-u* it depends on his mood. — *ʃana wi-*(pron) *wi-*(def n) we'll go straight to ..., as in *ʃana wi-nta wil-maḥkama* we'll go straight to the court (to see what's going to happen). ‖ *ʃana w-huwwa wiz-zaman ʈawiil* one day I'll get even with him.

و ا ء

واء *waaʃ* onomatopoeia for the sound of a baby crying. *ʃil-waad ɛala ɋoolit waaʃ miṣ-ṣubḥ* the baby has been howling since morning. see further under و ء و ء

و ا ت

وات *waat* <Engl> /n pl *wattaat/ [elec]* watt. - also *watt*.

و ا ح

واحة *waaḥa* /n pl *-aat*/ oasis.

و ا د

واد *waad = walad* 1.

و ا غ ش

واغش *waaxif* **1** /coll n/ insect(s). **2** /adj invar/ (of people) common, worthless.

و ا ق

واق *waaɋ, waaɋ: waaɋ il-waaɋ* or *waaɋ il-waaɋ* where everything is topsy-turvy, wonderland, as in *ʃil-ḥagat-di ma-tiḥṣal-ʃ*^{i} *wala f-bilaad waaɋ il-waaɋ* these things don't happen, not even in wonderland.

و ا و

واو *waaw, waaw* /fem n, pl *-aat*/ twenty-seventh letter of the Arabic alphabet. ‖ *xallaa-ha waaw* he caused a lot of trouble.

و ا و ا

واوة *waawa, waawa* <perh Copt> /n pl *-aat, -aat/ [children]* hurt place. *ʃuuf il-waawa lli f-rigl-i* see the hurt on my leg.

و ء م

وأم *waʃm* /n/ good match, compatible type, suitable kind. *ʃil-huduum di miʃ waʃm-ak* these clothes don't suit you. *ʃil-waẓiifa miʃ waʃm-u* the job isn't good enough for him. ‖ *min waʃm* ... of the class of ..., as in *kull*^{i} *waaḥid yaaxud illi min waʃm-u* everyone should marry someone of his own class.

واءم *waaʃim* /vt/ to suit, match. *da miʃ if-faxṣ illi yawaʃim-ni* that's not the person who suits me. - vn *muwaʃma, miwaʃma*; ava/pva *miwaaʃim*.

اتوائم *ʃitwaaʃim* /vi/ **1** to be made to suit or match. **2** to become suitable or compatible. - ava/iva *mitwaaʃim*.

و ء و ء see also **و ا ء**

وأوأ *waʃwaʃ* (also *waɋwaɋ*) /vi/ **1** to cry (of a baby). *nizil yiwaʃwaʃ min baṭn umm-u* he was born crying. **2** to stutter, stammer. - vn *waʃwaʃa*; ava *miwaʃwaʃ*.

اتوأوأ *ʃitwaʃwaʃ* /vi/ to stammer, stutter. - vn *tiwaʃwiiʃ*; ava *mitwaʃwaʃ*.

و ب ء
وبأ *wabaʔ, waba (i)* /vt/ **1** to infect, contaminate. *ʔil-firaax il-ɛayyaana wabaʔit il-firaax is-saliima* the diseased chickens infected the healthy ones. **2** to corrupt or affect morally. *dool wabaʔu l-manṭiqa* they lowered the tone of the neighbourhood. ‖*mara mawbuuʔa* a loose or immoral woman. - vn *wabaʔaan, waba*; ava *waabiʔ*; pva *mawbuuʔ*.
وباء *wabaaʔ, waba* /n *ʔawbiʔa*/ epidemic.
اتوبأ *ʔitwabaʔ, ʔitwaba* /vi/ passive of *wabaʔ*. - iva *mitwibiʔ, mitwibi*.
انوبأ *ʔinwabaʔ, ʔinwaba* = *ʔitwabaʔ*.

و ب خ
وبّخ *wabbax* /vt/ to scold, rebuke. - vn *tawbiix*; ava/pva *miwabbax*.
توبيخة *tawbiixa* /inst n, pl *-aat*/ a scolding. *ʔiddaa-lu tawbiixa kwayyisa* he gave him a good talking-to.
اتوبّخ *ʔitwabbax* /vi/ to be scolded, be rebuked. - iva *mitwabbax*.

و ب ر [1]
وبر *wabar* /n/ camel hair. *ṭaqiyya wabar* a skullcap made of camel hair. ‖*ḥ-anḥal wabar-u* ≈ I will give him a hard time. - *dihaan ɛala wabar* see *dihaan*.
وبرة *wabara* /n/ nap, pile.
وبّر *wabbar* /vi/ to develop a pile, become fluffy. *ʔil-xoox miwabbar* the peaches are downy. *ʔiṣ-ṣuuf da wabbar min ʔawwil libs* this woollen cloth felted the first time it was worn. - vn *tawbiir*; ava *mıwabbar*.

و ب ر [2] see و ب و ر: *wabuur*

(و ب ش)
وبس *wabʃ* /adj invar/ clumsy, gigantic. *fataḥt il-baab laqeet mara wabʃ'.kida quddaami* I opened the door to find a hulking great woman before me.
وبش *wabaʃ* /coll n, pl *ʔawbaaʃ*/ rabble, riff-raff. *saakin fi-ḥitta kull-a-ha naas ʔawbaaʃ* I'm living in a rough neighbourhood.

و ب و ر
وابور *wabuur* <It *vapore*> /n pl *-aat*/ **1** (primus) stove. *wabuur sibirtu* spirit stove. *wabuur gaaz* primus stove. **2** ship, motor-driven vessel. **3** locomotive, train. *wabuur biqaaɛa* goods train. *wabuur ʔiksibrees* express train. **4a** engine or motor. *wabuur ɛarabiyya* car engine. **4b** any of a variety of machines driven by a motor or engine. *wabuur il-ḥariiqa* fire-engine. *wabuur ṭiḥiin* grist mill. *wabuur ḥaliig* ginning factory. *wabuur zalaṭ* steamroller. - also *babuur* and *baguur*.

و ب ى see و ب ء: *waba, ʔitwaba, ʔinwaba*

و ت د
وتد *watad* /n pl *witaad, ʔawtaad, witída*/ **1** peg, stake. ‖*ɛuqdit watad* clove hitch. **2** *[agric]* dibble.

و ت ر
وتر *watar* /n pl *ʔawtaar*/ **1** string (of a musical instrument). ‖*(ḍarab ɛala) l-watar il-ḥassaas* (to touch on) a sensitive spot. **2** *[geom]* **2a** chord. **2b** hypotenuse.
وترى *watari* /adj */ having strings, stringed. *ʔalaat watariyya* stringed instruments.
اتوتّر *ʔitwattar* /vi/ to become tense, become nervous. - vn *tawattur*; ava *mitwattar*.

و ت ى see ء ت ى: *waata*

و ث ب see و س ب

و ث ق see و س ق [2]

و ث ن see و س ن

و ج ا ق
وجاق *wigaaq* <T *ocak*> /n pl *-aat*/ **1** brass bowl for holding a basket of draining *ṭaɛmiyya*. **2** oven in which irons are heated for pressing.

و ج ب
وجب *wagab [1] (yiwgab, yuugab, yagib)* /vi/ **1** to become incumbent, become obligatory. *ʔiṣ-ṣoom lıssa ma-wagab-ʃ' ɛalee* fasting is not obligatory for him yet. **2** *[Isl]* to reach its prescribed time (of any of the five obligatory prayers). *ṭaɛaala baɛd' ma tiwgab il-ɛaṣr' b-nuṣṣ' saaɛa* come half an hour after the afternoon prayer (has started). - vn *wıguub, wuguub*; ava *waagib*. ¶ *yagib* /vi/ modal of incumbency. *yagib ʔinn il-ʔinsaan yikuun ṭaahir ig-gism' wiḍ-ḍamiir* one must be pure in body and in conscience. *yagib ɛala l-muwaẓẓaf yaḍaɛ nuṣb' ɛenee* ... the civil servant must direct his attention to .... *yagib tizuruu-na kull' ʃwayyiteen* you ought to visit us every now and then. *ma-yagib-ʃ' tiɛmil kida* you shouldn't do that.
وجب *wagab [2]↓* /interj/ (response to a command or request) it is (only) my duty! your word is my command!
واجب *waagib* **1** modal of incumbency. *bi-ymaṭlu fil-ʔugra w-ʔabuu-ya waagib yiṭalib-hum* they are slow

in paying the rent, so father is obliged to demand it of them. *miʃ waagib tikallim ʃabuu-k biʃ-ʃakl[i] da* you shouldn't speak to your father like that. — /n pl *-aat/* **2a** duty, obligation. *ma daam il-waaḥid miʃaddi waagibaat-u yixaaf min ʃeeh* as long as one is fulfilling one's obligations, what is there to be worried about? *ʕaleek waagib liihum* you have a duty towards them. *waaḥid ʕandu waagib* or *bitaaʕ waagib* one who is socially alert. *waagib ʕaleena* (it is our duty) ≈ it is we who should invite you (response to an offer of hospitality). *waagib ʕal-ḥaaḍir* it is the duty of the one who is around (reply to *waagib ʕaleena*). ‖*ʕamal waagib li-* to behave with deference to, show consideration for, act with respect towards, as in *da ʕamal waagib li-ʃumm-u wi-ma-radd[i]-ʃ ʕala ṣaḥbit-ha* he showed respect for his mother in not retorting to her friend. - *ʃadda waagib* to offer congratulations, condolences, get-well wishes etc. (on occasions when social convention so demands). **2b** /always def/ hospitality. *ʕamal* (or *ʃadda) il-waagib li-ṣḥaab-u* he gave hospitality to his friends. *ʕaamit bi-wagib-na ʃarbaʕa w-ʕiʃriin ʕiraaṭ* she showed us great hospitality. ‖*laazim taxdu l-waagib il-ʃawwil* you must have some refreshment first (said to visitors who are in a hurry to leave). **3** (school) homework.

واجباتلى *wagibatli* /adj * and pl *-yya/* socially alert, never missing a chance to be courteous.

وجبة *wagba* /n pl *-aat/* (complete) meal. *bi-yaakul talat wagbaat fil-yoom* he eats three meals a day. *fii wagbaat muḥaddada lir-rijiim* there are prescribed meals for dieting.

أوجب *ʃawgab[1]* /el/ more/most obligatory, compulsory or necessary. *ʃawgab feeʃ ziyaarit il-mariiḍ* one's most important duty is to visit the sick.

وجّب *waggib* /vt/ to show respect for, behave with deference towards. *ʃinta laazim tiwaggib in-naas illi f-beet-ak* you should show respect to the people who are visiting you. - vn *tawgiib*; ava *miwaggib*.

اتوجّب *ʃitwaggib* /vi/ to be shown respect, be treated with deference. - iva *mitwaggib*.

أوجب *ʃawgab[2]* /vt/ to make compulsory, make obligatory. *rabb-i-na ma-ʃawgab-ʃ[i] ʕaleek illi fooq ṭaqt-ak* God did not ask you to do what is beyond your capabilities. *ma-ʃii-ʃ muugib liz-ziyaara di* there is no necessity for such a visit. - vn *ʃiigaab*; ava *muugib*; pva *muugab*.

إيجاب *ʃiigaab* /n/ **1** *[Isl]* offer of a contract. *ʃil-ʃiigaab wil-qabuul* the offer and acceptance of a contract, e.g., in a marriage ceremony. **2** affirmation. *bil-ʃiigaab* in affirmation.

إيجابى *ʃigaabi* /adj */ positive, responsive, active. *ʃil-ḥiyaad il-ʃigaabi* active neutrality.

¶ *ʃigabiyyan* /adv/ positively.

إيجابيّه *ʃigabiyya* /n/ **1** positivism. **2** /pl *-aat/* positive feature, point in favour.

موجب *muugib[1]* /n pl *-aat/* requirement.

¶ *bi-muugib* /prep/ by authority of, by virtue of. *ʃil-filuus tittaaxid bi-muugib iʃ-ʃiik bass* money can only be taken on the authority of a cheque. *tistaḥaqq[a] ʕalaawa b-muugib xidmit-ak iṭ-ṭiwiila* you are entitled to a rise by virtue of your long service.

موجب *muugab, muugib[2]* /adj/ *[elec]* positive.

استوجب *ʃistawgib (yistawgib, yastawgib[ɪ])* /vt/ **1** to deserve, merit. *ma-ʃii-ʃ ḥaaga tistawgib il-xinaaʕa di kull-a-ha* there is nothing to justify such a quarrel. *ʃana m-astawgib-ʃ[i] da kull-u minnak* I have done nothing to deserve such (bad) treatment from you. **2** to require. *di masʃala tistawgib l-intibaah* this is a matter that calls for attention. - ava *mistawgib*.

و ج ج

وجّ *wagg (i)* /vi/ to flare, flare up. *ʃin-naar waggit fi-hduum-i* fire flared up in my clothes. *ʃil-babuur wagg[i] f-wiʃʃ-i* the primus stove flared up in my face. *ʃil-xinaaʕa wagga miṣ-ṣubḥ* the quarrel has been on for a long time. - vn *wagg, wagagaan*; ava *waagig*.

و ج د

وجد *wagad[1] (yagid)* /vt/ to encounter, find, discover. -/the literary passive occurs/ *yuugad ʕandina baṭṭiix kitiir* there are lots of water-melons at our place. - vn *wuguud*; ava *waagid*; pva *mawguud*.

وجد *wagad[2] (yiwgid, yuugid)* /vt/ to cause, create. *ʃiʃ-ʃitiima hiyya lli wagadit iz-zaʕaʕ benna* it was bad language that caused the rift between us. - ava *waagid*; pva *mawguud*.

وجود *wuguud* /n/ **1** presence, existence. *fi-wuguud-u* in his presence. **2** *ʃil-wuguud* the universe. ‖*yaaʃis min il-wuguud* he is in complete despair.

وجودى *wuguudi* /adj */ existentialist.

وجوديّه *wugudiyya* /n/ existentialism.

واجد *waagid* **1** /adj invar/ plentiful. *ʕandu fluus waagid* he has a lot of money. **2** /n/ Creator (epithet of God).

موجود *mawguud* /adj */ **1** present, in attendance. *fii ḥadd[i] mawguud* is anyone here? *sitt il-beet miʃ mawguuda* the lady of the house is not here. *rabb-i-na mawguud* God is with us (and will take care of our problems) (said at times of difficulty). **2** available, to hand. *ʃil-kutub il-mawguuda ḥaliyyan* the books available at present. *huwwa da in-nooʕ il-waḥiid illi*

mawguud fis-suuq this is the only kind available on the market. *ma-titɛibii-ʃ nafs-ik - ʃana ḥ-aakul illi mawguud* don't put yourself to any trouble - I'll eat anything that's going. **3** present, current, existing. *ʃir-raʃy il-mawguud* current opinion. *ʃin-niẓaam il-mawguud* existing practice.

وجد *wagd* /n/ love (in poetry and songs). *ʃil-wagd' ẓaad ɛal-buɛaad* (our) love has increased with our being apart.

وجدان *wigdaan, wugdaan* /n/ (inner) consciousness, imagination, mind. *hiyya ɛayʃa f-wigdaan-i* she is always in my thoughts. *ʃil-wigdaan il-maṣri* the Egyptian mind. *ʃil-wigdaan l-igtimaaɛi↑* social consciousness.

اتوجد *ʃitwagad* /vi/ **1** to become available, come into existence. *ʃin itwagad il-ɛeef yibqa l-malḥ' baʃraqa [prov]* (if there is bread, salt is a luxury) ≈ first things first. **2** to be found. - ava/iva *mitwigid*.

انوجد *ʃinwagad* = *ʃitwagad*. - ava/iva *minwigid*.

اتواجد *ʃitwaagid* /vi/ to become present, become available. *laazim kull-i-na nitwaagid fil-maḥaṭṭa qabl il-qaṭr' b-saaɛa ɛal-ʃaqall* we must all be present at the station at least one hour before the train arrives. - vn *tawaagud*; ava *mitwaagid, mutawaagid↑*.

أوجد *ʃawgad (yiwgid, yuugid)* /vt/ to cause, create. *ʃinta lli ʃawgadt il-muʃkila wi-nta lli tḥill-a-ha* you are the one who created the problem and you should be the one to solve it. - vn *ʃiigaad*; ava *muugid*.

وج ز

وجيز *wagiiz↑* /adj */ brief. *baɛd' mudda wagiiza* after a short while.

أوجز *ʃawgaz↑ (yiwgiz, yuugiz)* /vt/ to make brief, make concise. *ʃiwgiz fil-ɛibaara* make the statement short. - vn *ʃiigaaz*; ava *muugiz*; pva *muugaz*.

وج س

اتوجس *ʃitwaggis, ʃitwaggas* /vi/ to feel apprehensive, have premonitions (of evil). *ḥarakaat-u xallit-ni ʃatwaggis mil-mawḍuuɛ da* his behaviour caused me to be apprehensive about this matter. - ava *mitwaggis*.

توجّس *tawaggus* /n pl *-aat*/ apprehension, premonition. *siib-ak mit-tawaggusaat di* rid yourself of these fears.

وج ع

وجع *wagaɛ' (a)* /vt/ to hurt, cause pain to. *dimaaɣ-i b-tiwgaɛ-ni* I have a headache. *ʃintu b-tiwgaɛu (fi-) nafuux-i* (or *raas-i*) you're giving me a headache. || *ʃallaah yiwgaɛ qalb-ak [abus]* ≈ may you suffer greatly! - vn *wagaɛ, wagaɛaan*; ava *waagiɛ*; pva *mawguuɛ*.

وجع *wagaɛ²* /n pl *ʃawgaaɛ*/ pain. *ɛandi wagaɛ fil-miɛda* I've got a stomach-ache. *wagaɛ il-baṭn' wala kabb iṭ-ṭabiix [prov]* (to a fool) stomach-ache (through over-eating) is preferable to throwing away (surplus) food. || *wagaɛ saaɛa wala kull' saaɛa [prov]* pain for an hour rather than pain every hour (said when something unpleasant has to be endured in order to gain some relief). - *wagaɛ qalb* thankless toil, worthless effort, as in *tarbiyyit il-wilaad il-yomeen dool baqit wagaɛ qalb* raising children these days has become a real heartache, *ɛiʃt-i qaraf wi-wagaɛ qalb* my life is miserable and wearisome. - *ga-k wagaɛ fi- [abus]* may you be struck in ..., as in *ga-k wagaɛ fi-nafuux-ak ya-bn il-kalb* may you be struck in the head, you son of a bitch! *ga-k wagaɛ fi-baṭn-ak* may you suffer pain in your stomach!

¶ *bil-wagaɛ* hardly worth anything. *dool ʃitneen gineeh bil-wagaɛ* these are two miserable pounds. *da maqaal waaḥid bil-wagaɛ illi katabt-u* it is only one single article that I wrote.

وجعان *wagɛaan* /adj */ **1** in pain. **2** complaining exaggeratedly of one's pain.

وجيعة *wagiiɛa* /n pl *mawaagiɛ, wagaayiɛ*/ pain, painful spot (particularly used in imprecations). *ga-k wagiiɛa f-baṭn-ak* may you have a stomach-ache!

¶ *ga* (or *gat*) *ɛal-wagiiɛa* it hit the nail right on the head, it found the right point. *ṭabɛan miwaafiq ɛaʃaan kalam-ha ga-lak ɛal-wagiiɛa* of course you agree, since what she says is what you wanted to say (or do) all along.

مواجع *mawaagiɛ* /pl n/ **1** old wounds, bad memories, bad experiences. *bi-yqallib ɛalayya l-mawaagiɛ* he stirs up old wounds of mine. **2** weak points (of which another can take advantage). *miraat-u ɛarfa mawagɛ-u feen* his wife knows where his weak spots lie.

اتوجع *ʃitwagaɛ* /vi/ to be hurt, be caused pain. - iva *mitwigiɛ*.

انوجع *ʃinwagaɛ* = *ʃitwagaɛ*. - iva *minwigiɛ*.

اتوجّع *ʃitwaggaɛ* /vi/ **1** to suffer pain. **2** to voice one's pain in an exaggerated manner. - ava *mitwaggaɛ*.

اتواجع *ʃitwaagiɛ, ʃitwaagaɛ* /vi/ to show or voice pain in an exaggerated manner. *ʃuqɛud ʃitwaagiɛ baqa ka-ʃinn' ma-ḥadd'-ʃ xad ḥuqna ʃilla-nta* go on moaning now, as if no one but you had been given an injection. || *ʃinta b-titwaagiɛ li-miin* who are you fishing for sympathy from? - ava *mitwaagiɛ*.

وج ق see وج ا ق: *wigaaq*

وج ل

وجل *wagal* /n/ reticence.

وجـ م

وجم *wagam (a)* /vi/ to feel despondent. *saaʕit ma ʃaaf iz-zuwwaar wagam* as soon as he saw the visitors he became dejected. - vn *wuguum*; ava *waagim*.

وجوم *wuguum* /n/ despondency, dejection.

وجـ ن

وجنة *wagna* /n pl *-aat, waganaat*/ cheek.

وجـ ه

جهة *giha* /n pl *-aat*/ **1** direction. *ʕinta raayiħ ʕanhi giha - gihit iz-zatuun* where are you heading, towards Zeytoon? *ʃuft iʃ-ʃawiiʃ gayyⁱ gihat-i* I saw the sergeant coming towards me. *ʕiʃ-ʃibbaak bi-yṭull gihit in-niil* the window faces the Nile. *ʕil-ʕayyil ʠaaʕid bi-yʠaṭṭaʕ waraʠ wi-b-yirmi f-kull il-gihaat* the boy is tearing up paper and throwing (the pieces) in all directions. *maayil gihat il-yimiin* tending to the right. **2a** side. *ʕana ħ-aʕaddi ʕal-giha t-tanya* I'll cross over to the other side. **2b** side, aspect, viewpoint. *ma-tʃil-fⁱ hamm il-mawḍuuʕ mig-giha di biz-zaat* don't worry about the problem from this particular point of view. *la ya duktuur mig-giha di ʕinta ɣalṭaan* no, doctor, you are wrong about this. *min gihat-i ʕana ma-ʕandii-ʃ maaniʕ ʕasaafir* as far as I am concerned I don't mind travelling. *min-giha ... wi-min giha tanya* on the one hand ... and on the other hand, as in *min giha maksuuf ʕaruuħ il-beet bil-ħaala di wi-min giha tanya m-aʠdar-fⁱ ʕanaam barra* on the one hand I am ashamed to go home in this state, but on the other hand I can't sleep out. **3** district, locality, place. *gihit baab il-luuʠ* the Bab el-Luq quarter. *gihat il-ʕamal↑* place of work. *raaħ ʠism il-buliiṣ fig-giha lli saakin fii-ha* he went to his local police station. **4** administrative division, department (of the government), establishment. *ʕayyⁱ ʃhaada min giha ħukumiyya laazim tikuun maxtuuma* any certificate from a government department should be stamped (with a seal). *laazim titʃawru maʕa l-gihaat il-muxtaṣṣa* you should consult with the authorities in charge. *ʕig-gihaat il-ħukumiyya* government departments. *ʕig-gihaat illi baʕtaa-kum bi-titħammil maṣarif-kum* the establishments that sent you cover your expenses.

وجه *wagh* /n pl *wuguuh, ʕawguh*/ **1** aspect, facet. *ʕaħad wuguuh il-muʃkila* one aspect of the problem. *ʕeeh wagh iʃ-ʃabah been il-mawḍuʕeen dool* what is the point of similarity between these two matters? *dool mutaʃabhiin min kull il-wuguuh* these are similar from every point of view. ‖*li-.. wagh* having pertinence, as in *kalam-ha lii wagh* there's a point in what she says. - *ʕil-wagh il-baħari* Lower Egypt. - *ʕil-wagh il-ʠibli* Upper Egypt. **2↑** face. ‖*fi-wagh* facing up to, as in *ʕurubba wiʠfit fi-waghⁱ turkiyya tultumiit sana* Europe stood up to Turkey for 300 years. - *waghan li-wagh* face to face. ¶ *li-wagh* /prep/ for the sake of, as in *ħasana li-wagh illaah [beggars]* alms for God's sake. - *ʕala* (or *bi-)wagh* /prep/ in the manner of, by way of, as in *ʕala wagh it-taʠriib* approximately, *ʕala wagh is-surʕa* quickly, *ʕala wagh il-ʕumuum* generally.

واجهة *wagha* /n pl *-aat*/ front, façade. *waghit il-ʕimaara* the façade of the building. ‖*laazim tigiib bintⁱ laṭiifa tkuun wagha lil-maħall* you should get a pleasant girl to act as an attraction for the shop.

وجهة *wigha* /n pl *-aat*/ **1** direction. *wighit-ak feen* where to? **2** point of view. *ʕil-mas ʕala fiiha wighaat kitiira* there are various points of view in the matter. *min il-wigha di ʕana msallim maʕaak* from this particular viewpoint I am in agreement with you. *wighit naẓar-i ʕana ɣeer kida* my own opinion is different.

وجاهة *wagaaha* /n/ elegance, style. *ʃabaab il-ʕayyaam di labsiin ʕaaxir wagaaha* the youth of today are very smartly dressed. ‖ *ʕiqtiraaħ fi-ɣaayit il-wagaaha* a very good suggestion.

وجيه *wagiih* **1** /adj pl *wugaha*/ elegant, stylish. ‖*da suʕaal wagiih* that's a good question. **2** /n pl *wugahaaʕ*/ *[obsol]* title of, and form of address to, a man of high social standing, particularly of the royal family.

أوجه *ʕawgah* /el/ more/most elegant or stylish.

وجّه *waggih, waggah* /vt/ **1** to direct, give direction to. *waggih ihtimaam-ak lil-ħaaga lli tinfaʕ* direct your attention to what is useful. ‖*ʕin-niyaaba ma-waggahit-luu-ʃ ʕayyⁱ tuhma* the prosecution did not charge him with any crime. **2** to guide, steer. *bi-ywaggihu f-fuɣlⁱ w-yibʠu maskiin fi-ʕdee-hum kull ª ħaaga* they direct the work and control it absolutely. - vn *tawgiih*; ava *miwaggih, muwaggih*; pva *muwaggah*.

توجيه *tawgiih* /n pl *-aat*/ directive. *fii tawgihaat maktuuba b-tiigi min fooʠ* there are written directives which come from above.

توجيهى *tawgiihi* /adj */ directing. ‖*ʕiʃ-ʃihaada t-tawgihiyya* or *ʕit-tawgiihi [obsol]* (1) certificate of secondary education. (2) last year of secondary school.

موجّه *muwaggih* /n */ **1** director of activities (in a school, club, civic organization etc.). **2** school inspector.

اتوجّه، توجّه *ʕitwaggah, tawaggah↑* /vi/ to turn to, direct oneself towards. *ʕil-yoom illi titwaggah fii lil-manṭiʠa t-taʕlimiyya* the day you go to the educational zone. *ʕawwil ħaaga tawaggahna lik-kaʕba* first we

turned towards the Kaaba. - vn *tawagguh*↑; ava *mitwaggih, mutawaggih*↑.

واجه *waagih* /vt/ to confront, face. *fii duwal waghit-ha muʃkilit il-guuɛ* there are countries that have been faced with the problem of hunger. *marḥalit il-muwagha f-ʃamla maɛa l-ɛadiww* the stage of total confrontation with the enemy. ‖*fi-muwagha* to the face of, as in *ʃana ɋult ik-kalaam da fi-muwaghit-u* I said so to his face. - vn *muwagha*; ava *miwaagih, muwaagih*↑; pva *muwaagah*↑.

اتواجه *ʃitwaagih* /vi/ to be confronted, be faced. - iva *mitwaagih*.

اتّجه *ʃittagah* /vi/ to take a direction, turn, head (for s.th.). *ḥa-nittigih li-feen wi-ʃizzaay* where shall we head for and how? *ʃittigih yimiin* turn to the right! - vn *ʃittigaah*; ava *mittigih*.

اتّجاه *ʃittigaah* /n pl *-aat*/ **1** direction, course. *mumkin taaxud il-ɋaṭr' min maṣr' f-ʃayy' ʃittigaah* you can take the train from Cairo in any direction. ‖*ʃariɛ bi-ttigaah waaḥid* one-way street. **2** trend, tendency. *fii ʃittigaah iʃtiraaki fil-ɛaalam in-nahar-da* there is a trend towards socialism in the world today.

تجاه *tigaah, tugaah*↑ /prep/ towards. *ɛamalt' wagb-i tgaah-u* I did what is right by him. *miʃiina tigaah ig-gamɛa* we walked towards the University.

استوجه *ʃistawgah (a)* /vt/ **1** to consider (s.o.) good-looking or elegant. ‖*baayin ɛaleek mistawgah nafs-ak* you obviously think you're very dashing. **2** to select for elegance. *ʃinta b-tistawgah iz-zabaayin walla ʃeeh* do you pick out the elegant customers first or what? - vn *ʃistiwgaah*; ava *mistawgah*.

و ج و ج

وجوج *wagwig* /vi/ to flare up intensely. - vn *wagwaga*; ava *miwagwig*.

و ح د

حدة *ḥida*[2]: *ɛala ḥida* separately.

وحد *waḥd (also li-waḥd-)* /adv, w pron suff also *waḥdii-*/ alone, by oneself. *da saakin fil-beet (li-)waḥd-u* he lives in the house by himself. *bi-naakul (li-)waḥdii-na kull' leela* we eat alone every night. *tiɋdar tirfaɛ-u (l-)waḥd-ak* can you lift it by yourself? *miʃ if-faɋɋa (l-)waḥd-a-ha* (or *li-waḥid-ha) lli tḥaraɋit - laʃ da l-beet kull-u kamaan* it wasn't just the flat which was burned out, but the whole building as well.

وحداني *waḥdaani* /adj */ alone in the world. *hiyya waḥdaniyya ma-lhaa-ʃ siwaa-k ya rabb* she is alone in the world; she has no-one but you, Lord. *ʃana waḥdaani maɋtuuɛ min ʃagara* I'm alone in the world with no relatives.

وحدانيّة *waḥdaniyya* /n/ oneness (of God). *daliil ɛala waḥdaniyyit illaah* a proof of God's oneness.

وحدوى *waḥdawi* /n */ *[pol]* unionist.

وحدة *wiḥda, waḥda*↑ /n pl *-aat*/ **1a** unit, elementary unit. *ʃil-wiḥda l-ʃasasiyya lil-ittiḥaad l-iʃtiraaki mukawwana min ɛiʃriin ɛuḍw* the basic unit of the Socialist Union consists of twenty members. *wiḥdit il-muqawma hiyya l-ʃoom [elec]* the unit of resistance is the ohm. **1b** branch, regional or local centre. *wiḥda ṣiḥḥiya* local health centre. *wiḥda ziraɛiyya* regional agricultural centre. *wiḥda mugammaɛa* (rural) community centre. **1c** *[mus]* a single occurrence of the pattern of a rhythmic mode. *ʃil-waḥda ṣ-ṣuvayyara* 2/4 time. *ʃil-waḥda k-kibiira* 4/4 time. **2** unity. *ʃil-wiḥda l-waṭaniyya* national unity. **3** solitude, loneliness. *ʃig-gawaaz ma-huwwaa-ʃ ɛilaag lil-wiḥda* marriage is no cure for loneliness. *ʃil-wiḥda xayrun min galiis is-suuʃ [prov]* solitude is better than bad company. *faɛar bil-wiḥda* he felt lonely. ‖*leelit il-wiḥda* first night spent by the dead in the tomb.

وحيد *waḥiid* /adj pl *wuḥaad, waḥidiin*/ sole, only. *ʃibn-a-ha l-waḥiid* her only son. *ʃig-geeʃ ma-xad-uu-ʃ ɛaʃaan waḥiid* he was not conscripted because he's an only son. *nusxa waḥiida* a single copy. ‖*waḥiid il-ʃabaween* an only child. - *waḥiid il-ɋarn* rhinoceros. - *huwwa l-waḥiid fik-kabaab* he makes the best kebab around. - /adverbially/ *ɋaaɛid waḥiid* he is sitting by himself.

واحد *waaḥid* **1** /num/ one. *waaḥid fil-miyya* one percent. ‖ *ʃif-fuvl' da nimra waaḥid* this is top quality work. - *ɛenee makruuma ɛaʃra w-waaḥid* he is one-eyed. - *waaḥid wi-talatiin* (1) Egyptian card game. (2) *[coarse]* masturbation. - *ɋaal waaḥid wi-sittiin* he took to his heels. — /fem *waḥda*/ **2** /adj/ **2a** single, lone. *nimra waḥda bass* only one number. **2b** uniform. *kull-a-ha loon waaḥid* it is all the same colour. ‖*kull-u-kum waaḥid ɛandi* you are all the same as far as I am concerned. **3** /pron/ someone, somebody, a certain person, a certain .... *ʃayy' waaḥid* anyone. *waaḥid ɣeer il-muwaẓẓaf ig-gidiid* someone other than the new employee. *fii waaḥid barra ɛayz-ak* there is someone outside to see you. *ʃana ɋabilt' waaḥid muhandis ɋal-li kida* I met a certain engineer who told me so. ‖ *ʃil-waaḥid* one (used very frequently instead of the personal pronoun), as in *ʃil-waaḥid laazim yiftaval bi-ḍamiir* one should work conscientiously, - *ʃil-waaḥid xalaaṣ miʃ ɋaadir yistaḥmil ʃaktar min kida* I've taken

just about all I can stand. - *kull' waaḥid fi-* or *ʕil-waaḥid fi-* each one of, as in *kull' waḥda fiina miḥtaaga l-waaḥid yiḥmii-ha* every woman among us needs a man to protect her, *ʕil-waaḥid fiikum laazim yiʕmil illi ʕalee* each of you must play his part. **4** /n/ unit, one (of many). *ʕaawiz waaḥid walla tneen* do you want one or two? *wala waaḥid* not a single one. *bi-ybiiʕu l-beeḳ bil-waḥda* they sell eggs singly. *ʕil-fakha di mitnaḳḳiyya bil-waḥda* (these fruits are individually selected) ≈ these are choice fruits. *dool maʕdudiin bil-waḥda* these are counted exactly. ‖ *waaḥid waaḥid* one by one. - *waḥda waḥda* slowly, easily, gently, as in *suuḳ waḥda waḥda* drive slowly, *waḥda waḥda ʕal-ʕayyil* be gentle with the kid. - *ʕala waḥda w-nuṣṣ* keeping to the *baladi* drum rhythm (in folk dancing). - *maʃya ʕala waḥda w-nuṣṣ* walking with a (provocative) wiggle. — /n/ **5** One (epithet of God).

وحّد *waḥḥid* or *waḥḥad* /vt/ **1** to join together, unite. *ʕabd in-naaṣir ḥaawil yiwaḥḥad il-ʕarab* Nasser tried to unite the Arabs. **2** to standardize, unify. *hiyya l-ḥukuuma lli bi-twaḥḥid il-maḳayiis* it's the government which standardizes measures. - vn *tawḥiid*; ava *muwaḥḥid*; ava/pva *miwaḥḥid, miwaḥḥad*; pva *muwaḥḥad*.

¶ *waḥḥad allaah* to pronounce the formula *la ʕilaaha ʕilla llaah*. ‖ *ma-ʕanduu-ʃ wala ḳirf' ywaḥḥid allaah* he hasn't got a penny to his name. - *wala waaḥid yiwaḥḥid allaah* not a living soul. - *waḥḥiduu* interjection for breaking an embarrassing silence, in the hope that the response *la ʕilaaha ʕilla llaah* will make people relax and talk.

التوحيد *ʕit-tawḥiid* /n/ **1** the doctrine of the oneness of God. **2** *[Isl]* theology.

موحّد *miwaḥḥad, muwaḥḥad* /adj */ unified. ‖ *taʕriifa mwaḥḥada* flat rate.

اتوحّد *ʕitwaḥḥad* /vi/ passive of *waḥḥad*. - iva *mitwaḥḥad*.

متوحّد *mutawaḥḥid* /n */ *[Chr]* hermit, anchorite.

اتّحد *ʕittaḥad* /vi/ to join together, unite. *ʕis-sittaat ittaḥadu w-ḳaṭʕu l-ḥagaat il-ɣalya* the women united and boycotted the expensive items. *ʕik-kabriit yittiḥid maʕa l-ʕuksujiin* sulphur unites with oxygen. ‖ *ʕil-ʕumam il-muttaḥida* the United Nations. - *ʕil-wilayaat il-muttaḥida* the United States. - vn *ʕittiḥaad*; ava *muttaḥid, mittiḥid*.

اتّحاد *ʕittiḥaad* /n pl *-aat*/ union. *ʕittiḥaad iṭ-ṭullaab* students' union. *ʕil-ittiḥaad is-suvyitti* the Soviet Union. *ʕil-ittiḥaad l-iftiraaki (l-ʕarabi)* the (Arab) Socialist Union.

اتّحادى *ʕittiḥaadi* /adj/ *[pol]* federal.

و ح س

وحس *waḥas (i)* /vt/ to confuse, embarrass. *ʕaḳall' muʃkila b-tiwḥis-u* the smallest problem throws him into confusion. *maa lak mawḥuus kida* why are you so confused? ‖ *ya mawḥuus ʕala ʕeen-ak [women]* you muddle-headed dimwit! - vn *waḥasaan*; ava *waaḥis*; pva *mawḥuus*.

وحسة *waḥsa* /n pl *-aat*/ muddle, confusion, dilemma. *ʕeeh il-waḥsa s-sooda lli-ḥna fiiha di* what's this terrible mess we're in?

اتوحس *ʕitwaḥas* /vi/ to be or become confused or embarrassed. - ava/iva *mitwiḥis*.

انوحس *ʕinwaḥas* = *ʕitwaḥas*. - iva *minwiḥis*.

و ح ش '

وحش *waḥʃ* /n pl *wuḥuuʃ*/ wild animal, beast. *law tigri ya-bn' ʕaadam gary il-wuḥuuʃ ɣeer rizḳ-ak ma-tḥuuʃ [prov]* ≈ man proposes, God disposes. ‖ *di mara waḥʃ* she's a gluttonous woman.

وحشى *waḥʃi* /adj */ wild, barbaric, fierce. *muʕamla waḥʃiyya* cruel treatment. ‖ *ḥumaar waḥʃi* zebra.

وحش *wiḥiʃ* /adj */ **1** bad, unpleasant, nasty. *riḥ-u wiḥʃa* it has a nasty smell. *raagil wiḥiʃ* an unpleasant man. *ḥaṣalit-lu ḥaaga wiḥʃa* he had an unpleasant experience. *kida wiḥiʃ [children]* that's a bad thing (to do). *ma-tʃuf-ʃ' wiḥiʃ* may you never know any unpleasantness (conventional reply to *waḥaʃt-i-na* q.v.). **2** ugly. *taḳaṭiʕ-ha wiḥʃa* her features are ugly.

أوحش *ʔawḥaʃ'* /el/ **1** worse/worst. **2** uglier/ugliest.

وحاشة *waḥaaʃa* /n/ **1** unpleasantness, unkindness. *balaaʃ il-waḥaaʃa di* stop this unkind behaviour! **2** ugliness. *fi-ɣaayit il-waḥaaʃa* extremely ugly.

وحّش *waḥḥaʃ' (a)* **1** /vt/ **1a** to make unpleasant. *ʕeeh illi waḥḥaʃ-ak kida* what made you become so unkind? **1b** to make ugly. *ʕinta ʕammaal tiwaḥḥaʃ fil-fustaan leeh* why are you making the dress so ugly? — /vi/ **2** to become fierce-looking. *ʕaxuu-ki waḥḥaʃ wi-baḳa yxawwiʃ* your brother has become so fierce-looking that he is frightening. **3** to become overgrown (of plants and animals). *ʕil-ḳuuṭa kibrit wi-waḥḥaʃit* the tomato plants have grown up and become wild. - vn *tawḥiiʃ*; ava/pva *miwaḥḥaʃ*.

اتوحّش *ʕitwaḥḥaʃ* /vi/ **1** to become fierce or fierce-looking. **2** to become overgrown (of plants and animals). - ava *mitwaḥḥaʃ*.

اوحشّ *ʕiwḥaʃʃ* /vi/ to become ugly, become unattractive. *lamma l-ḥibla tiwḥaʃʃ' yibḳa lli f-baṭn-a-ha walad* when a pregnant woman becomes unattractive it means she is carrying a boy. - ava *miwḥaʃʃ*.

استوحش *ʕistawḥiʃ'*, *ʕistawḥaʃ'* /vt/ **1** to consider ugly.

ʕistawḥafit il-ɣariis she considered the suitor too ugly (and refused to marry him). **2** to select for ugliness. *ʕistawḥaf fustaan wi-ʃtara-hu-lha* he picked an ugly dress and bought it for her. — /vi/ **3** to become fierce, become beastly. *ʕistawḥaf fil-ʕakl* he wolfed down the food. - vn *ʕistiwḥaaf*; ava *mistawḥif, mistawḥaf*.

وحش [2] **و ح ش**

waḥaf (a) /vt/ to be missed by (s.o.). *waḥaft-i-na* we missed you (conventional greeting after a period of separation or absence). *ḥa-tiwḥaf-na ktiir* we shall miss you a lot. *ʕinta waḥif-ni ẉin-nabi w-waḥfaa-ni l-ɋahwa lli kunna nifrab-ha maɛa baɛḍ* I miss you, you know, and I miss the coffee we used to drink together. *lik waḥfa* you have been missed. - vn *waḥafaan, waḥfa*; ava *waaḥif*.

وحّش *waḥḥif, waḥḥaf*[2] /vi/ *[obsol]* to sing *tawaḥiif*. - vn *tawḥiif*; ava *miwaḥḥif*.

توحيشة *tawḥiiʃa* /n pl *-aat, tawaḥiif/ [obsol]* poem lamenting the departure of the month of Ramadan chanted from roof tops between midnight and dawn.

أوحش *ʕawḥaf*[2]*: la ʕawḥaf allaah minkum* (may you not be missed for long) may we soon see you again!

استوحش *ʕistawḥif*[2], *ʕistawḥaf*[2] /vi/ to feel lonely. *lamma daxalt il-beet istawḥaft' w-ɋalb-i tɋabaḍ* upon entering the house I felt desolate and had a sense of gloom. - vn *ʕistiwḥaaf*; ava *mistawḥif, mistawḥaf*.

¶ *ʕistawḥaf li-* to long for. *ʕana stawḥaft' lil-ɛiyaal* I am longing to see the children.

وحل **و ح ل**

waḥal (i) /vt/ **1** to bog down (in mud). *ḥaasib ḥa-tiwḥil nafs-ak fiṭ-ṭiin* careful, you will get yourself stuck in the mud! **2** to implicate, involve (in trouble etc.). *ʕinta waḥalt-i-na maɛaak fil-ɋaḍiyya min ɤeer luzuum* you've unnecessarily involved us with you in the case. *ʕinta mawḥuul fiiha l-fuʃt-ak* you are in it up to your ears. - vn *waḥalaan, waḥla*; ava *waaḥil*; pva *mawḥuul*.

وحلة *waḥla* /n/ mire. *ʕism-u baɋa fil-waḥla* his name was dragged in the mud.

وحل *waḥl*↑ /n pl *ʕawḥaal, wuḥuul*/ mud.

وحلان *waḥlaan* /adj */ stuck, aground. *ʕil-markib waḥlaan wi-dool miʃ ɛarfiin yiṭallaɛuu* the boat is stranded and they cannot free it. *dool waḥlaniin fi-muʃkila ɛawiiṣa* they are bogged down in a big problem. *ʕintu waḥlaniin fi-ʕeeh* what (triviality) is it that you are caught up in?

اتوحل *ʕitwaḥal* /vi/ passive of *waḥal*. - iva *mitwiḥil*.

انوحل *ʕinwaḥal* = *ʕitwaḥal*. - iva *minwiḥil*.

وحّل *waḥḥal* **1** /vt/ **1a** to cover with mud. *ʕinta waḥḥalt' hduum-ak xaaliṣ* you've smothered your clothes with mud. **1b** to turn into mud. ‖ *ʕinta waḥḥalt id-dunya* you've made a big mess. — /vi/ **2** to become muddy. *ʕil-ʕarḍ' waḥḥalit* the ground turned to mud. **3** to wade (in mud). *ma-twaḥḥal-ʃ' fil-maṭara* don't go wading out in the rain. - vn *tawḥiil*; ava/pva *miwaḥḥal*.

استوحل *ʕistawḥal* /vi/ **1** to consider (too) muddy. **2** to select for muddiness. - ava *mistawḥal*.

وحم **و ح م**

وحمة *waḥma* /n/ **1** craving for a certain type of food (experienced particularly by a pregnant woman). **2** /pl *-aat*/ birthmark.

وحم *waḥam* /n/ craving experienced by a pregnant woman.

اتوحّم *ʕitwaḥḥam* /vi/ to experience a craving (for particular kinds of food, especially of a pregnant woman). *ʕil-ḥaamil bi-titwaḥḥam ɛaadatan ɛala l-ḥawaadiɋ* a pregnant woman usually craves salty foods. - vn *tawḥiim*; ava *mitwaḥḥam*.

توحيمة *tawḥiima* /inst n/ a craving. *ʕit-tawḥiima di laazim sabab-ha l-ḥaml* this particular craving you have now must be caused by pregnancy.

وحوح **و ح و ح**

وحوح *waḥwaḥ* /vi/ **1** to whine, snivel (particularly of a child). **2** to chatter from cold (of the teeth). - vn *waḥwaḥa*; ava *miwaḥwaḥ*.

اتوحوح *ʕitwaḥwaḥ* = *waḥwaḥ*. - ava *mitwaḥwaḥ*.

وحوى **و ح و ى**

وحوى *waḥawi* nonce word in children's Ramadan jingle.

وحي [1] **و ح ى**

وحي *waḥy* /n/ **1** inspiration. **2** *[theol]* inspiration, revelation.

أوحى *ʕawḥa* /vi/ **1** to give inspiration. *ʕeeh illi ʕawḥaa-lik bil-fikra di* what gave you that idea? *rabb-i-na ʕawḥaa-lu yhaagir min makka* God inspired him to emigrate from Mecca. **2** to be suggestive, be indicative. *kull[a] ḥarakat-ha b-tuuḥi big-gins* her whole behaviour is sexually suggestive. - vn *ʕiiḥaaʃ*; ava *muuḥi*.

استوحى *ʕistawḥa*[1] /vt/ to derive or seek inspiration from. *ʕil-looḥa di mustawḥaa min ir-riif il-maṣri* this painting was inspired by the Egyptian countryside. - vn *ʕistiḥaaʃ*; ava *misḥawḥi, mustawḥi*; pva *mustawḥa*.

وحى 2

وحى *waḥa*[1] *(i)* /vt/ to goad, incite. *miin illi waḥaa-k ʕaṭ-ṭalaaq* who gave you this bad idea of divorce? *ʕinta mawḥi ʕalayya* you've been incited against me. - vn *waḥayaan*; ava *waaḥi*; pva *mawḥi*.

وحّى *waḥḥa* = *waḥa*. - vn *tawḥiyya*; ava/pva *miwaḥḥi*.

اتوحّى *ʔitwaḥḥa* /vi/ to be goaded or incited. - iva *mitwaḥḥi*.

اتّحى *ʔittaḥa* /vt/ to victimize incessantly or obsessively. *ʔittaḥit il-waad biḍ-ḍarb*[i] *lamma krih-ha* she kept on beating the boy until he hated her. - ava *mittiḥi*.

استوحّى *ʔistiwaḥḥa* /vt/ to goad vigorously, incite emphatically. - ava *mistiwaḥḥi*.

وحى 3

وحى *waḥa*[2]: *ʔil-waḥa l-waḥa [magic]* quickly, with top speed (formula used in demanding services from spirits).

وخد see ءخد: *waaxid, waxxid, ʔitwaxxid*

وخرى see ءخر: *waxri*

وخز

وخز *waxaz*↑ *(i)* /vt/ to prick. ‖ *waxz iḍ-ḍamiir* prickings of conscience. - vn *waxz, waxaẓaan*; ava *waaxiz*; pva *mawxuuz*.

وخزة *waxẓa* /inst n, pl *-aat*/ a prick.

اتوخز *ʔitwaxaz* /vi/ to be pricked. - iva *mitwixiz*.

وخم

وخم *waxam* /n/ drowsiness, sluggishness. *ḳuum bala waxam* get up, get a move on, wake up!

وخمان *waxmaan* /adj */ drowsy, sluggish.

وخّم *waxxam* /vi/ **1** to become stuffy, become congested (of air). **2** to become slothful (of people). *ʔil-waaḥid waxxam min ḳillit il-ḥaraka* one is feeling sluggish because of lack of activity. - vn *tawxiim*; ava *miwaxxam*.

ودد

ودّ *wadd (i)* /vt/ to feel affection for. *saaʕit ma ʃuft-u ḳalb-i wadd-u* I fell for him as soon as I saw him. *ṭuul ʕumr-u w-huwwa bi-ywidd-i-ni* he has felt affection for me all his life. - vn *wadadaan, widd, wudd*; ava *waadid*; pva *mawduud*.

¶ *wadd*[a] *ʕala* to pay a friendly visit on. *ʔibḳa widd*[a] *ʕaleena* do call on us sometime.

ودّ *widd* /n/ affection, liking. *kaan fii widd*[i] *benhum* there was affection between them. *yuṭlubu widd-i ʕaʃaan ʃeeh* why should they seek my friendship? ‖ *law il-widd*[i] *widd* ... were it up to ..., as in *law il-widd*[i] *widd-i ma-kan-ʃ*[i] *daxal il-beet* if I had my way, he would not have set foot in the house. - *ka-widd*[i] *waaḥid*↓ on the same level, as in *xalli il-balaṭeen ka-widd*[i] *waaḥid* lay the two tiles level with each other.

¶ *bi-widd-* (also *bidd-*) modal of desire. *bi-widd-i* (or *bidd-i) ʔasaafir* I want to travel. *kaan bi-widd-u-hum* (or *kaan bidd-u-hum) yiigu laakin ma-laḳuu-ʃ muwaṣla* they would have liked to come but couldn't find any means of transport. - *ma-bidd*[a]*-haa-ʃ* it's high time to act, as in *saaʕit ma ʃuft il-xanaagir ẓaharit ḳult*[i] *ma-bidd*[a]*-haa-ʃ* as soon as I saw the daggers coming out I decided there was no time to waste.

ودّى *widdi, wuddi* /adj */ amicable, friendly. *taswiya widdiyya* (1) amicable settlement. (2) *[leg]* out of court settlement.

أودّ *ʔawadd* /el/ more/most desirable. *ʔawadd*[i] *ma ʕala ḳalb-i ʔinn il-buliis yimsik-ak* there is nothing I want more than that the police catch you.

وداد *widaad* /n/ affection, love.

ودود *waduud* **1** /adj */ affectionate. **2** /n/ Favourably-disposed One (epithet of God).

ودّاد *waddaad* /adj */ sociable. *di kaanit sitt*[i] *waddaada* she was a very sociable woman.

مودّة *mawadda* /n pl *-aat*/ liking, affection.

اتودّ *ʔitwadd* /vi/ passive of *wadd*. - iva *mitwadd*.

اتودّد *ʔitwaddid, ʔitwaddad* /vi/ to show affection. - vn *tawaddud*↑; ava *mitwaddid*.

اتوادّ *ʔitwaadd* /vi/ to exchange social courtesies or expressions of affection. - vn *tawaadd*↑; ava *mitwaadd*.

ودع 1

ودع *wadaʕ*[1] *(a)* /vt/ to lodge, deposit, place in custody. *mumkin tiwdaʕ filuus-ak wi-taaxud ʕaleeha ʃarbaaḥ* you can deposit your money and earn interest on it. *laazim niwdaʕ-ak fil-ḥagz*[i] *l-bukra* we must place you in custody until tomorrow. *ʔil-maḥkama b-tuḥkum bi-ʔidaaʕ il-walad fil-malgaʃ* the court rules that the boy should be placed in a children's home. - /the literary passive frequently occurs/ *ʔiʃ-ʃihaada btaʕt-ak laazim tuudaʕ fi-ḳalam it-tasgiil* your certificate has to be deposited in the registry. - vn *wadaʕaan*; ava *waadiʕ*; pva *mawduuʕ*.

وداع *widaaʕ, wadaaʕ* /n/ farewell. *ḥaflit widaaʕ* farewell party. *ṭawaaf il-wadaaʕ [Isl]* last ritual step in the pilgrimage which consists in making farewell circuits of the Kaaba.

وداعة *wadaaʕa* /n/ gentleness, mildness.

وديع *wadiiʕ↑* /adj */ gentle, mild.

وديعة *wadiiʕa* /n pl *wadaayiʕ*/ deposit, thing or sum deposited. ‖ *ʃiṣaal wadiiʕa* a receipt for goods deposited with the customs upon arrival from abroad for subsequent clearance. - *maxzan il-wadiiʕa* the depot where such goods are deposited.

اتودع *ʃitwadaʕ* /vi/ to be lodged, be deposited, placed in custody. - iva *mitwidiʕ*.

ودّع *waddaʕ* **1** /vt/ to bid farewell. *waddaʕt-u ʔabl' ma ʃasaafir* I said goodbye to him before he went away. **2** /vi/ *[joc]* to pop off, kick the bucket. - vn *tawdiiʕ*; ava *miwaddaʕ*.

مودّع *miwaddaʕ* /adj/ departing, dying out. *ʃil-xiyaar miwaddaʕ il-yomeen dool* it is the end of the season for cucumbers.

اتودّع *ʃitwaddaʕ* /vi/ to be bidden farewell. - iva *mitwaddaʕ*.

أودع *ʔawdaʕ↑ = wadaʕ'*. - vn *ʃidaaʕ*; ava *muudiʕ*; pva *muudaʕ*.

إيداع *ʃidaaʕ* /n pl *-aat*/ deposit. *ʃidaaʕ taʃmiin* security deposit.

مودع *muudiʕ* /n */ depositor.

استودع *ʃistawdaʕ* /vt/ to entrust to. *ʃistawdaʕt-ak il-filuus di l-ɣaayit m-argaʕ mil-ḥagg* I entrust this money to you until I return from the pilgrimage. ‖ *ʃistawdaʕt-ak rabb-i-na* go in God's keeping. - vn *ʃistiwdaaʕ*; ava/pva *mistawdiʕ, mistawdaʕ*.

استيداع *ʃistidaaʕ* /n/ *[mil]* pension. *ʃitḥaal ʕal-ʃistidaaʕ* he was retired.

مستودع *mustawdaʕ* /n pl *-aat*/ depot.

² و د ع

ودع *wadaʕ²* /coll n/ sea-shell(s). ‖ *ḍarb il-wadaʕ* method of fortune-telling by throwing down shells and examining the positions in which they fall.

ودعة *wadaʕa* /unit n, pl *-aat*/ a seashell.

ودعاية *wadaʕaaya = wadaʕa*.

و د ك

ودّك *waddik* /vt/ **1** to season or condition (s.o.), cause (s.o.) to mature. *miʃ ḥa-ywaddik-ak ʃilla fuṣl is-suuq* there's nothing like getting out to work for making you grow up. **2** to fire (pottery) in a kiln. - vn *tawdiik*; ava *miwaddik*.

اتودّك *ʃitwaddik* /vi/ **1** to be or become seasoned or matured. **2** to be fired in a kiln (of pottery). - ava/iva *mitwaddik*.

و د ن

ودن *widn* /fem n, pl *widaan*/ **1** ear. *ḥalamit il-widn* lobe of the ear. *ʃil-ḥeṭaan liiha wdaan* walls have ears. *yiddi l-ḥalaq li-lli bala wdaan [prov]* (He gives earrings to those who have no ears) ≈ the best goes to those least equipped to appreciate it. ‖ *(ʕamal) widn' min ṭiin wi-widn' min ʕagiin* ≈ (to let things) in one ear and out of the other. - *ʕala widn-u* abundant, as in *kaanit ḥafla kbiira w-kaan if-furb[a] ʕala widn-u* it was a big party with a lot of drinking. - *wɪdn-ak mɪneen ya guḥa* (Goha, where's your ear?) ≈ why do you make simple matters complicated? - *widn' quṭṭa* flat soft piece of bread, shaped like a scoop for dipping in food. - *widn-u ḥilwa* he has a good ear (for music). - *ʃɪddɪ-ni widn-ak* ≈ lend me your ear, give me your attention. - *taxxan widn(-u)* to flatter (s.o.), swell (s.o.) up with (undue) praise. - *widn il-fiil [bot]* elephant's ear (Caladium esculentum). **2** (roughly ear-shaped) handle, lug. *widn' fingaan* cup handle. *ʃil-quffa lli laha widneen yifiluu-ha tneen [prov]* (the basket with two handles is to be carried by two) ≈ many hands make light work. ¶ *widanaat-ak: ḥalaq dahab fi-wdanaat-ak* a line of a song traditionally sung for *yoom is-subuuʕ*.

ودنة *widna* /n/ **1** name of various wild plants, such as varieties of navelwort, scorpion's tail, plantain, and indigo plant. *ṣabbaara wɪdna* name of various succulent plants, such as Christmas cactus. **2** hangnail.

ودنى *widani* /adj */ fond of listening to gossip.

وديني *wideeni = wɪdani*.

و د و د

ودود *wadwid* /vi/ to tell malicious tales, gossip. *qaʕadu ywadwidu kull is-sahra* they sat gossiping all evening long. - vn *wadwada*; ava *miwadwid*.

¶ *wadwid lɪ-* to goad, incite. *qaʕadu ywadwiduu-lu l-ɣaayit ma ṭallaq miraat-u* they kept on at him until he divorced his wife.

اتودود *ʃitwadwid* /vi/ to exchange confidences, exchange secrets. *qaʕdiin yitwadwɪdu miṣ-ṣubḥ* they've been whispering secrets to each other for ages. - ava *mitwadwid*.

و د و ز –

وادوزيل *wadwaziil, wadwazeel* /n pl *-aat*/ *[slang]* effeminate man, pansy.

¹ و د ى

وادى *waadi* /n pl *widyaan*/ valley, gully, ravine. *waadɪ n-niil* the Nile valley. *waadi l-muluuk* the Valley of the Kings. *baṭn il-waadi* bed of the ravine. ‖ *huwwa f-waadi wi-nta f-waadi* you and he are not on the same wavelength.

و د ي [2]

ودّى *wadda* /vt/ **1** to convey, take. *ʔiṭ-ṭabbaax ḥa-ywaddi iṣ-ṣawaani (ɛala) l-furn* the cook will take the trays to the bakery. *ɋal-li l-ɛaskari taɛaala maɛaaya w-waddaa-ni l-ẓaabiṭ taani* the policeman said, 'Come with me', and took me to another officer. *yiwaddii-k il-baḥr' wi-ygiib-ak ɛaṭfaan* (he takes you to the river and brings you back thirsty) ≈ he can twist you round his little finger. *ʔaadi s-sillim illi ḥa-ywaddii-k il-balakoona* there are the stairs that will lead you to the balcony. *ʔiṣ-faariɛ da ywaddi ɛala feen* where does the street lead to? ‖ *ɛaɋl-a-ha ywaddi wi-ygiib* she is anxious and distracted. - *kalaam-ak la ywaddi wala ygiib* what you are saying is pointless. **2** to send. *wadduu-ni maɛa waaḥid tamargi ɛamal-li ḥuɋna* they sent me off with a nurse who gave me an injection. *waddeet ibn-i madrasa fil-xaarig* I sent my son to a school abroad. *ʔil-balad illi twaddi ʔaḥsan min illi tgiib [prov]* (the place that sends people away is better than that which brings them in) ≈ good riddance. ‖ *ʔawaddi wiṣṣ-i (minnu) feen* I am very embarrassed (to see him). - *wadda(a) f-dahya* to ruin (s.o.), give (s.o.) a hard time. - vn *tawdiyya*; ava *miwaddi*.

اتودّى *ʔitwadda* /vi/ **1** to be conveyed, be taken. **2** to be sent. - iva *mitwaddi*.

و ر ا see و ر ى [2]: *wara*

و ر ب

ورب *warab (i)* **1** /vt/ to cut (a woven fabric or paper) on the bias. *laazim tiwrib il-ɋumaaʃ ɛaʃaan ir-rasma tibɋa maẓbuuṭa* you should cut the material on the bias so that the design is right. **2** /vi/ to hang awry (of cloth). - vn *warb*; ava *waarib*; pva *mawruub*.

ورب *warb, warb* /n/ **1** obliqueness, slant. **2a** diagonal. *bil-warb* diagonally. *rakkib il-ḥittiteen bil-warb* fix the two pieces together by the oblique sides. **2b** *[text]* bias. *bil-warb* on the bias.

اتورب *ʔitwarab* /vi/ **1** to be cut on the bias. **2** to hang awry (of cloth). - iva *mitwirib*.

وارب *waarib (i)* /vt/ to cause to be ajar. *waarib il-baab fiwayya* open the door just a little bit. - vn *muwarba, miwarba*; ava/pva *miwaarib*.

مواربه *muwarbaˆ* /n/ evasiveness. *ʔitkallim min ɤeer muwarba* don't be evasive, speak directly.

اتوارب *ʔitwaarib* /vi/ to be left ajar. - iva *mitwaarib*.

و ر ث see و ر س

و ر د [1]

ورد *warad (yiwrid, yaridˆ)* /vi/ **1** to be mentioned, occur. *ʔil-iṣṭilaaḥ da warad fi-kutub kitiira* this expression occurs in many books. **2** to meet (with s.o.), come to the attention (of s.o.). *yaama warad ɛaleena ẓabaayin* how many (different) customers have come to us! ‖ *yaama warad ɛaleena* we've seen them all. - *ḥaaga ma-waradit-ʃ* something unique. **3** to arrive (of correspondence etc.). *ʔil-muẓakkara di waradit bi-tariix tamantaaʃar* this memo arrived on the eighteenth. ‖ *maktab il-wuruud [communic]* telegraph receiving office. - *maktab il-waarid [communic]* the office for incoming mail. - *daftar il-waarid [admin]* the register of incoming mail. - *ʔil-ɋaṭr il-waarid* the incoming train. - *xitm il-waarid [communic]* stamp showing the arrival date of letters etc. - vn *wuruud*; ava *waarid*.

واردات *waaridaat* /pl n/ imports. *ʔil-waaridaat wiṣ-ṣaadiraat* imports and exports.

ورد *wird* /n pl *ʔawraad, wiraad, wuruud*/ **1** land-tax form issued to landowners to show tax instalments paid by them. **2** *[Isl]* schedule of specified prayers and sections of the Koran read during private worship particularly between midnight and dawn.

وريد *wariid* /n pl *ʔawrida*/ vein.

وريدى *wariidi* /adj */ venous, veinal.

مورد *mawridˆ* /n pl *mawaarid*/ **1** source, resource. *mawaarid il-mayya* sources of water. *mawaarid maliyya* financial resources. **2** source of income. *maɛanduhum-ʃ' mawrid ɤeer-u* they have no other source of income.

موردة *muráda, murda* /n pl *-aat*/ slope leading down to the water's edge in a canal or the Nile, where villagers wash their clothes and dishes and fill their water-pots (water-carrying being treated by eligible girls as an opportunity for appearing socially - hence the frequent reference to the *muráda* in love songs).

وردّ *warrad'* /vt/ **1** to supply. *ʔig-gamɛa bi-twarrad liina k-kutub wid-dafaatir* the university supplies us with the books and notebooks. **2** to dispatch, deliver. *dool dayman bi-ywarradu l-biḍaaɛa fil-waɋt il-maẓbuuṭ* they always deliver the goods on time. - vn *tawriid*; ava *miwarrad, muwarridˆ*; pva *miwarrad, muwarradˆ*

توريد *tawriid* /n pl *-aat*/ supply. *maktab tawridaat* purchasing department. *ʔamr' tawriid [admin]* supply order.

موردّ *muwarrid* /n */ supplier.

اتوردّ *ʔitwarrad* /vi/ **1** to be supplied. **2** to be dispatched, be delivered. - iva *mitwarrad*.

إيراد *ʔiraad* /n pl *-aat*/ **1** revenue, take. *mutawassiṭ ʔiraad ʔayy' maḥaṭṭit banziin kibiir* the average revenue of any petrol station is considerable. **2** income. *ḍariibit il-ʔiraad il-ɛamm* income tax.

استورد ʃistawrad /vt/ to import. *maṣr' b-tistawrid ɣamḥ' min ʃamriika* Egypt imports wheat from America. -/the literary passive imperfect occurs/ *ʃil-makana di b-tustawrad min barra* this machine is imported from abroad. ‖*maktab istiraad wi-taṣdiir* import and export office. -vn *ʃistiraad*; ava *mistawrid, mustawrid*↑; pva *mustawrad*.

² و ر د

ورد *ward* /coll n/ **1** flower(s). *ʃil-ward' miʃ li-lli ʒaraɛ il-ward' li-lli gana [prov]* ≈ the work we do today will profit those who come after us. ‖*ward*ª *ɛaleek* how wonderful you are! **2** (also *ward' baladi*) rose(s). *l-agl il-ward' yitsiqi l-ɛulleeq [prov]* for the sake of roses the creepers are watered. *xaʃab ward* rosewood. *mayyit ward* or *maaʃ ward* or *maward* rose water. *ma-laquu-ʃ fil-ward' ɛeeb ɣaluu-lu y-aḫmar il-xaddeen [prov]* (they found no flaw in the rose, so they called it rosy-cheeked) ≈ you would find fault with a fat goose! *ʃilli yḫibb il-ward' yistaḫmil ʃook-u [prov]* he who loves a rose should bear its thorn.

وردة *warda*¹ /n/ **1** /unit n, pl *-aat*/ **1a** a flower. **1b** a rose. *tidbal il-warda w-riḫit-ha fiiha [prov]* (a rose may fade yet its scent remains) ≈ one's good qualities are not changed by one's lot in life. **2** /pl *wirad*/ *[mech]* metal washer.

ورداية *wardaaya* = *warda*¹.

وردى *wardi* /adj */ rose-coloured, rose-pink.

وردّ *warrad*² /vi/ **1** to blossom. *ʃiz-zarɛ' warrad* the plants blossomed. **2** to become rosy-coloured. *xudud-ha mwarrada* her cheeks are rosy. — /vt/ **3** to make rosy in colour. -vn *tawriid*; ava *miwarrad*.

اتوردّ *ʃitwarrad* /vi/ to become rosy in colour. *wiff-a-ha twarrad xaaliṣ baɛd' ma xadit vitaminaat* she became healthy-looking after she took vitamins. -ava *mitwarrad*.

³ (و ر د)

وردا *warda*² <It *guarda*> /interj/ look out! stand clear!

وردّيه *wardiyya* <It *guardia*> /n pl *-aat, waraadi*/ **1** shift, scheduled period of work. **2** group of workmen scheduled to work during a particular shift.

و ر د ل

وردل *wardul* <Gr *bardoulo*> /n/ welt (of a shoe).

و ر د م –

وردمان *wardamaan* <It *guardamano*> /n pl *-aat*/ hand-rail (e.g., above the steps of a bus).

و ر ر

وزّ *warr*¹ *(i)* /vi/ **1** to whirr, produce a humming or buzzing sound. *ʃit-tilifoon ma-bi-ywirr'-ʃ xaaliṣ* the telephone gives no dialling tone. **2** to revolve, move around quickly. *ʃin-naḫla ɣammaala twirr* the top is spinning hard. ‖*ʃil-ʃagaaza miʃ maɛnaa-ha ʃinnak tiwirr' fiʃ-ʃawaariɛ ṭuul in-nahaar* being on holiday does not mean that you should run around in the streets all day long. -vn *warr, warr, wararaan*; ava *waarir*.

وزّ *warr*², *warr* /n/ hum, humming noise. *warr it-tilifoon* dialling tone.

و ر س

ورث *waras, waras, wiris (i)* (also *ʃiris*↓, *ʃaras*↓) **1** /vt/ **1a** to inherit. *ʃil-beet illi wrist-u ɛan ʃabuu-ya ṭarbaq* the house I inherited from my father collapsed. **1b** to be an heir to. *ɣamm-i maat w-ana wrist-u* my uncle died and I am his (sole) heir. **2** /vi/ to come into an inheritance. *lamma tiwris ʃiwɛa tinsa lli ɛaleek* when you come into your inheritance don't forget your debts. *waras fi-* to share in (s.o.'s estate), as in *waras fi-ɣamm-u* he was one of his uncle's heirs. -vn *wirs, wiraasa*; ava *waaris*; pva *mawruus, mawruus*.

ورث *wirs* (also *ʃirs*↓) /n/ legacy, inheritance.

وراثة *wiraasa* /n pl *-aat*/ **1** legacy, inheritance. **2** heredity. *guzʃ' kbiir min iz-zakaaʃ bi-ykuun bil-wiraasa* intelligence is largely a matter of heredity.

وراثى *wiraasi* /adj */ hereditary.

وارث *waaris* /n * and pl *warasa*/ heir, inheritor.

وريث *wariis* (also *ʃariis*↓) /n pl *wurasa*/ heir. *huwwa l-wariis il-waḫiid* he is the only heir.

ميراث *miraas* /n pl *mawariis*/ legacy, inheritance. *ɣaɛdiin yitɣasmu l-miraas* they are dividing up the legacy.

تراث *turaas*↑ /n/ legacy. *ʃit-turaas il-ʃadabi* the literary heritage.

اتورث *ʃitwaras, ʃitwaras, ʃitwiris* /vi/ to be inherited. *ʃil-beet itwaras ɛan gidd-i* the house was inherited from my grandfather. *ʃitwaras bil-ḫaya* his property was divided up (among his relatives) while he was still alive. -iva *mitwiris*.

ورّث *warris, warras* (also *ʃarras*↓) /vt/ **1** to bequeath to. *ʃabuu warris-u sarwa* his father left him a fortune. ‖*ʃil-ḫaya fir-rigaal yiwarris il-faqr [prov]* timidity in men leads to poverty (an injunction to be more aggressive). **2** to divide up (an inheritance) according to the law amongst the ones who are eligible to share in it. -vn *tawriis*; ava/pva *miwarris*.

¶ *warras fi(i)* to give (s.o.) the right to share in (an

inheritance). *ma-warras-hum-ʃ*^{i} *fil-beet* he did not leave them a share in the house.

مورّث *miwarris* /n */ testator.

اتورّث *ʔitwarris, ʔitwarras* (also *ʔitʔarris*↓) /vi/ **1** to divide up an inheritance (of inheritors). *saabu r-raagil mayyit ɛala sriir-u w-ɋaamu yitwarrisu fii* they left the dead man on his bed and started dividing his property among themselves. **2** to be divided up (of an inheritance). **3** to be made an heir. - ava/iva *mitwarris*.

أورث *ʔawras*↑ /vt/ to leave (as a result). *ʔil-ħaya bi-yiwris il-faqr* modesty leads to poverty. - iva *miwris*.

اتوارث *ʔitwaaris, ʔitwaaras* (also *ʔitʔaaris*↓) = *ʔitwarris* 1. - ava *mitwaaris*.

توارث *tawaaras*↑ /vt/ to inherit generation after generation. *tawaarasu ṣ-ṣanɛa ʔabban ɛan gidd* they passed the craft down from father to son. - vn *tawaarus*; ava *mutawaaris*; pva *mutawaaras*.

(و ر ش)

ورش *warʃ* /n/ *[rur]* **1** butcher's chopping block. **2** axle rest or bearing at the water exit of an Archimedes' screw (see Pl.E, 16).

ورشة *warʃa* <prob Engl> /n pl *wiraʃ*/ workshop.

و ر ط

ورط *waraṭ (i)* /vt/ to cause to be involved in difficulties, get (s.o.) into a predicament. *ʔinta lli waraṭ*^{i} *nafs-ak min ɤeer luzuum* you've got yourself into trouble unnecessarily. - vn *waraṭaan, warṭa*; ava *waariṭ*; pva *mawruuṭ*.

ورطة *warṭa* /n pl *-aat*/ difficult situation, predicament, fix.

اتورط *ʔitwaraṭ* /vi/ to be or become involved in difficulties. - ava/iva *mitwiriṭ*.

انورط *ʔinwaraṭ* = *ʔitwaraṭ*. - ava/iva *minwiriṭ*.

ورّط *warraṭ* /vt/ to put on the spot, embroil in difficulties. *ʔiṣ-ṣaħafi warraṭ-u fik-kalaam* the journalist talked him into a tight spot. - vn *tawriiṭ*; ava/pva *miwarraṭ, muwarraṭ*.

اتورّط *ʔitwarraṭ* /vi/ to be or become involved in difficulties. - ava/iva *mitwarraṭ*.

و ر ع

ورع *waraɛ* /n/ godliness.

ورع *wariɛ*↑ /adj */ God-fearing.

اتورّع *ʔitwarraɛ* /vi/ to be reticent or reserved. *ma-yitwarraɛ-ʃ*^{i} *ɛan ʔakl*^{i} *maal in-nabi* he would not hesitate to steal (even) the Prophet's money. - ava *mitwarraɛ*.

و ر ق

ورق *waraq* /coll n, pl *ʔawraaq*/ **1** paper. *waraq zibda* greaseproof paper. *waraq laħma* thick cartridge paper. *waraq garaayid* newsprint. *waraq naʃʃaaf* blotting paper. *waraq sanfara* sandpaper. *waraq laff* wrapping paper. *waraq bafra* cigarette paper(s). *tuqqaalit waraq* paperweight. *dabbuus waraq* paper clip. *manadiil waraq* paper handkerchiefs, tissues. *kiis waraq* paper bag. ‖ *ʔil-yomeen dool if-fubbaan waraq* young people are soft these days. - *ɛal-waraq* on paper, in theory, as in *ʔana b-aqbaḍ miit gineeh ɛal-waraq* on paper I get paid a hundred pounds, *ʔil-xiṭṭa kwayyisa ɋawi ɛal-waraq* the plan seems fine in theory. - *ħibr*^{a} *ɛala waraq* empty (written) words, as in *ʔik-kitaab da kalaam-u kull-u ħibr*^{a} *ɛala waraq* that book has no substance. **2** document(s), (official) paper(s). *ʔawraaq l-iɛtimaad* credentials. *ʔawraaq maliyya* stock certificates. *waraq-ak mitɛaṭṭal fiwayya* your papers have been held up. *laazim tiqaddim ʔawraaq-ak fil-miɛaad* you should present your papers on time. **3** ticket(s), stamp(s), or other paper(s) of small size. *waraq busṭa* postage stamp(s). *waraq damɤa* (1) fiscal stamp(s). (2) sheet(s) of paper with a fiscal stamp (for applications etc. to government departments). *waraq yanaṣiib* lottery ticket(s). *ʔil-waraq (min faḍl-u-kum)* tickets (please)! **4** playing card(s). *ṭuul in-nahaar maskiin il-waraq fi-ʔdee-hum* they play cards all day long. **5** paper patterns (in dressmaking). *di miʃ bass*^{i} *faṭra fit-tafṣiil - bi-tiɛraf tiquṣṣ il-waraq kamaan* she's not just good at dressmaking - she even knows how to make paper patterns. **6** foliage, leaves. *maħʃi waraq ɛinab* (dish of) stuffed vine-leaves. ‖ *waraq madɤa* (a quid of) chewing tobacco. **7** petal(s).

ورقة *waraɋa* /unit n, pl *-aat*/ **1** a piece of paper, a sheet of paper. *waraɋit zibda* a piece of greaseproof paper. *waraɋit garaayid* a sheet of newspaper. **2** a document, an official paper. *ʔiddii-ni waraɋa ʔadxul biiha l-mustaffa* give me an official note so I can be admitted to the hospital. ‖ *waraɋa* (or *waraɋit ṭalaaq*) *[Isl]* bill of divorce, as in *goz-ha baɛat laha waraɋit-ha* her husband sent her the document registering the divorce, *ʔiddii-ni waraɋṭ-i [women]* divorce me! - *waraɋit ʔuktoobar* government policy statement issued after the War of October 1973. **3** a note. *ṃa-laɋet-uu-ʃ fil-beet fa-sibt-i-lu waraɋa* I didn't find him at home so I left him a note. **4** a ticket, a stamp, or other paper of small size. *ʔana gibt il-waraɋa xalaaṣ* I've already bought the ticket. *waraɋa b-ɛaʃara (gneeh)* a ten-pound note. **5** a playing card. ‖ *ʔit-talat waraɋaat* (1) three-card trick, find the

lady. (2) swindling, as in *raagil bitaaʒ it-talat waraqaat* a con man, a swindler. **6a** a (small) packet. *waraqit ʃaay* a (small) packet of tea. **6b** a parcel wrapped in paper. ‖*waraqit laḥma* (1) a piece of cartridge paper. (2) dish of meat, onions, spices and sometimes potatoes, cooked in this paper. **7** a leaf. ‖*mayooh waraqit tuut* a fig-leaf bikini, a very brief bikini. **8** a petal.

ورقى *waraqi* /adj/ of paper, made of paper. *ʒumla waraqiyya* paper currency.

ورّاق *warraaq* /n */ paper supplier, paper dealer.

ورّق *warraq* **1** /vt/ *[rur]* to remove the bottom leaves of (maize) for use as fodder. **2** /vi/ to produce leaves, become leafy. - vn *tawriiq*; ava/pva *miwarraq*.

اتورّق *ʔitwarraq* /vi/ *[rur]* to be removed for use as fodder (of maize leaves). - iva *mitwarraq*.

و ر ك

ورك *wirk* /pl *wiraak*, *ʃawraak*/ **1** thigh (of a rabbit or fowl). **2** *[coarse]* human thigh.

ورّك *warrak*, *warrak* /vi/ *[coarse]* to become thick-thighed. - vn *tawriik*; ava *miwarrak*.

اورك *ʔiwrik: ʔiwrik-ni wi-ṣdir nafs-ak [prov]* give me the leg and you take the breast ≈ nobody is expected to promote others above his own head.

و ر م

ورم *wirim (a)* /vi/ to swell, swell up. *laqeet liwaz-i wirmit qadd il-beeḍa* I found my tonsils had swollen to the size of eggs. - vn *waramaan*, *waram*; ava *waarim*.

ورم *waram* /n pl *ʃawraam*/ swelling, lump. *waram xabiis* malignant tumour.

أورم *ʃawram* /el/ more/most swollen.

ورّم *warram* **1** /vt/ to cause to swell. *ʒandi rumatizm' fil-mafaaṣil wi-saʒaat bi-ywarram-ha* I have rheumatism in my joints and sometimes it makes them swell. ‖*waṛram dimaaɣ(-u)* to give (s.o.) a headache. *warram buyuuḍ(-u) [coarse]* to annoy or disgust (s.o.), give (s.o.) a balls-ache **2** /vi/ to swell up. *riglay-ya fiṣ-ṣeef bi-twarram* in the summer my feet swell. - vn *tawriim*; ava/pva *miwarram*.

موّرم *miwarram* /adj */ *[abus]* sulky.

اتورّم *ʔitwarram* /vi/ **1** to swell up. **2** *[abus]* to become annoyed. *ʔitwarram minni ʒal-ʃaaxir* he was ready to burst with anger at me. - ava *mitwarram*.

و ر ن ش

ورنيس *warniif* <It *vernice*> /n/ **1** varnish. **2** wax polish. **3** shoe polish. *ʔiḍrab ig-gazma warniif* have the shoes polished!

ورنش *warnif, warnaf (i)* /vt/ to polish, wax. *xud ig-gazma warnif-ha* take the shoes and have them polished. - vn *warnaʃa*; ava/pva *miwarnif*.

اتورنس *ʔitwarnif, ʔitwarnaf* /vi/ to be polished, be waxed. - iva *mitwarnif*.

و ر و ر

وروّر *wirwir* <Copt> /adj invar/ **1** crisp and young (vegetable vendor's cry). *ʔil-figl il-wirwir* fresh radishes! **2** green, inexperienced (of people). *ʔinta lissa wirwir* you are still inexperienced. *ʔil-bint' di wirwir* this girl is young and naive.

وروّر *warwir (i)* /vi/ **1** to become crisp, sappy and flourishing (of plants). *ʔil-xaṣṣ' warwir* the lettuces have become crisp. **2** to become fresh and healthy-looking (of people and especially girls). *ʔil-bint' warwirit baʒd' ma ṣayyifit fi-swisra* the girl glowed with health after she spent the summer in Switzerland. - vn *warwara*; ava *miwarwir*.

وروّرة *wirwira* /n pl *waraawir*/ **1** young chicken. **2** *[slang]* girl. — *waraawir* /pl n/ **3** fresh produce! (vegetable vendor's cry). *figl il-waraawir* fresh radishes!

و ر ي [1]

ورّى *warra (yiwarri, yiwri)* /vt/ to show. *ḥa-nwarrii-ku ṣuwar gawaz-na* we'll show you our wedding pictures. *warreet-u ʃinni mistaɣrab min ṭalab-u* I let him see that I was astonished at his request. ‖*rabb-i-na ma-ywarrii-k* or *ʃallaah la yiwrii-k* ≈ may you never see such a thing! (said when mentioning some misfortune). - *warrii-ni ʒarḍ' ktaaf-ak* ≈ beat it! - *warraa n-nuguum fi-ʒizz iḍ-ḍuhr* ≈ he gave him a hell of a time. - *w-allaahi l-awarrii-k* by God I'll show you! - vn *tawriyya*; ava *miwarri*.

اتورّى *ʔitwarra* /vi/ to be shown. - iva *mitwarri*.

و ر ي [2]

وراء *wara* /prep, w pron suff *waraa-*, 1st sing *waraaya*/ **1** behind. *ʔil-ḍuṭṭa wara d-dulaab* the cat is behind the cupboard. *wiqift astarayyaḥ baṣṣeet laqeet uṭ-ṭabuur da wiqif waraaya* I stopped to rest, looked round and saw this line of people had stopped behind me. ‖*waraaya fuɣl* I have work to do. - *waraana naas* we have people to consider. - *min wara minni* or *min waraaya* without my knowledge. - *la waraa wala ḍuddaamu* he has nothing. - *ṣarafu ʔilli waraahum wi-lli ḍuddamhum* they spent all they had. **2** after, following. *ʃagib-lak ʒaṣafiir ʔizzaay - ʃaṭiir waraahum fis-sama*

how am I supposed to get sparrows for you? should I fly after them in the sky? *maṭraḥ ma truuḥ (ʕana) waraak* wherever you go I'll follow. *ʕig-garas ḍarab marriteen wara baʕḍ* the bell rang twice in succession. *ʕir-ruṣaaṣ gayy' wara baʕḍ-u* the bullets are coming thick and fast.

ورّانى *warraani* /adj */ rear, back, at the back. *ʕil-baab il-warraani* the back door.

توريه *tawriya↑* /n pl *-aat/ [lit]* allusion.

وارى *waara↑* /vt/ to obscure, veil. *waarit wiff-a-ha* she hid her face. *lizum-ha ʕeeh il-miwariyya* what is the need for dissimulation? *ḥibb' w-waari wi-krah wi-daari [prov]* ≈ show your love discreetly, but hide your hate completely. - vn *miwariyya*; ava/pva *miwaari*.

اتوارى *ʕitwaara↑* /vi/ to hide oneself. - ava *mitwaari*.

و ز ر 1

وزر *wizr* /n pl *ʕawzaar/* **1** sin. **2** fault.

وزارة *wizaara, wazaara* /n pl *-aat/* (governmental) ministry.

وزارى *wizaari* /adj/ ministerial.

وزير *waziir* /n pl *wuzara/* **1** government minister. ‖ *liʕbit il-waziir* any of several children's games in which one child is chosen to decide rewards and punishments. *baab il-waziir* quarter of Cairo north of the Citadel. **2** queen (in chess).

استوزر *ʕistawzar↓* /vi/ to become a government minister. *ʕilaah-i tistawzar wi-tibqa raagil ʕaẓiim* may you become a minister and an important man. - ava *mistawzar*.

و ز ر 2

وزره *wazara* /n pl *-aat, wuzar/* **1** any structural device, such as a baseboard, which goes around a room. **2** lintel.

و ز ز 1

وزّ *wazz (i)* /vt/ **1** to tempt. *ʕif-fiṭaan wazz-i-ni ʕala f-furb* Satan tempted me to drink. **2** to incite. *wazzu l-mudiir ʕalayya* they set the director against me. - vn *wazz, wazaẓaan*; ava *waaziz*; pva *mawzuuz*.

وزّة *wazza* /pl *-aat/* instance noun of *wazz*. *qabl' ma saafir gat wazza ʕalee* somebody reported on him before he left the country.

وزّاز *wazzaaz* /adj */ factious, contentious, seditious.

اتوزّ *ʕitwazz* /vi/ **1** to be tempted. **2** to be incited. - iva *mitwazz*.

انوزّ *ʕinwazz* = *ʕitwazz*. - iva *minwazz*.

و ز ز 2

وزّ، إوزّ *wizz* /coll n/ goose, geese. *ʕibn il-wizz ʕawwaam [prov]* ≈ he's a chip off the old block. ‖ *wizz' ʕraaqi* swans. - *ʕil-ʕizz' w-ʃakl il-wizz* ≈ a life of luxury, as in *dool mitrabbiyiin fil-ʕizz' w-ʃakl il-wizz* they were brought up in the lap of luxury. - *hizz' ya-wizz* ≈ shake it baby! (phrase used to girls in the street). - *ʕilli takl-u wizz' wizz' yiṭlaʕ ʕala ʕnee-k baṭṭ' baṭṭ [prov]* ≈ you will always pay for your deeds. - *zayy il-wizz' ḥinniyya bila bizz [prov]* (like a mother goose who loves her goslings yet does not breast-feed them) ≈ you say you love but do nothing to prove it.

وزّة، إوزّة *wizza* /n pl *-aat/* **1** /unit n/ a goose. **2** plump girl.

و ز ع

وزّع *wazzaʕ* /vt/ **1** to distribute. *min faḍl-ak wazzaʕ il-manʃuraat di ʕala l-muwaẓẓafiin* please distribute these circulars to the employees. ‖ *looḥit tawziiʕ [elec]* circuit board. **2** to pass on, farm out. *raʕiis il-ʕidaara wazzaʕ il-qaḍiyya ʕala muḥaami kwayyis* the administrative head dealt the case out to a good lawyer. **3** to get rid of, send away. *liziq-li w-ma-ʕrift'-ʃ ʕawazzaʕ-u* he stuck to me and I couldn't give him the brush-off. **4** *[mus]* to arrange. - vn *tawziiʕ*; ava/pva *miwazzaʕ*.

توزيعة *tawziiʕa* /inst n, pl *-aat/* a way to get rid of someone. *ʕaʃuf-lu tawziiʕa* I'll find a way to get rid of him.

موزّع *muwazziʕ* /n */ **1** distributor. *muwazziʕ il-bariid* postman. *muwazziʕ il-ʕarzaaq* (or *il-ḥuẓuuẓ*) God, the distributor of fortune. **2** *[mus]* arranger, orchestrator.

موزّعاتى *miwazzaʕaati* /n pl *-yya/* one expert in passing his work on to others, shirker. *muwaẓẓafiin il-ḥukuuma mwazzaʕatiyya daraga ʕuula* government employees are first-class shirkers.

اتوزّع *ʕitwazzaʕ* /vi/ passive of *wazzaʕ*. - iva *mitwazzaʕ*.

و ز ن

وزن *wazan (i)* /vt/ **1** to weigh, determine the weight of. *ʕiwzin if-fiwaal tilaqii naaqiṣ talaata kiilu* weigh the sack and you'll find it three kilos short. ‖ *ʕil-mudiir lil-ʕasaf ma-b-yiwzin-ʃ il-ʕumuur maẓbuuṭ* unfortunately the director doesn't have good judgement. **2** to balance, make even or level. *ʕil-bayyaaʕ il-ʕamiin bi-yiwzin kaffiteen il-mizaan qabl' ma yistaʕmil-u* an honest vendor balances his scales properly before using them. ‖ *ʕiwzin il-mutoor* tune up the engine! - *bi-yiwzin rigl-u ʕala l-binziin* he has an even touch on the accelerator. - *firib kaseen ʕaʃaan yiwzin dimaaɣ-u* he had a couple of drinks to clear his head. - *ʕil-badla mawzuuna ʕalee* the

suit fits him well. — /vi/ **3** to equal or amount to (s.th.) in weight. *ʕis-sanduuq yiwzin xamastaafar kiilu* the crate weighs fifteen kilos. ‖*ʕaqil-i yiwzin ʕafara min illi zayy ir-raagil da* I'm ten times smarter than the likes of that man. **4** to weigh much, be heavy. *ʕif-feela di tiwzin* this load is weighty. - vn *wazn*; ava *waazin*; pva *mawzuun*.

وزن *wazn* /n pl *ʔawzaan*/ **1** weight. *ʔasʕaar id-dibal bi-tibqa ḥasab wazn id-dahab illi fiiha* the prices of plain rings depend on the weight of gold in them. *ʔinʕidaam il-wazn* weightlessness. ‖*ʔil-wazn in-nawʕi* specific gravity. - *raagil ma-luu-ʃ wazn* a man of no consequence. **2** *[mus]* time signature. **3** *[poet]* metre. **4** *[gram]* Arabic morphological pattern. *wazn il-fiʕl* verb pattern.

وزنة *wazna* /n/ **1** /pl -*aat*/ an item or load which is weighed. *wazniteen kull' waḥda xamsa kiilu* two weighed loads of five kilograms each. **2** /no pl/ balance, equilibrium. *ʕid-dulaab lii wazna law ixtallit yuqaʕ* a wardrobe is balanced (upright), and will fall if its equilibrium is disturbed. ‖*waznit mutoor* engine tune-up.

أوزن *ʔawzan* /el/ more/most level-headed.

وزّان *wazzaan* /n */ professional weigher.

ميزان *mizaan* /n pl *mawaziin*/ **1** balance, weighing scales. *mizaan ḥassaas* precision balance. *mizaan qabbaani* steelyard. *ʕandi mzaan ṣuɤayyar ʕafaan ʔawzin qiṭaʕ il-ḥafiif* I have a small scale for weighing the pieces of hashish. *ʔil-biqaaʕa titbaaʕ bil-mizaan* the merchandise is sold by weight. ‖*mizaan ṭabliyya* weighbridge. - *ʕiid-u mzaan* he has a precise hand. - *ʕitkallim bi-mzaan* to weigh one's words. - *mizaan il-madfuʕaat [finan]* balance of payments. **2** meter, gauge. *mizaan ḥaraara* thermometer. *mizaan iḍ-ḍooʃ* light-meter. *mizaan xeeṭ* plumb-line. *mizaan mayya* spirit level. **3** *[mus]* time signature. **4** *ʔil-mizaan [astrol]* Libra. **5** *[dent]* articulator.

ميزانيّة *mizaniyya* /n pl -*aat*/ **1a** budget. *mizaniyyit il-beet* the household budget. **1b** quota, amount (of s.th.) as a budget item. *mizaniyyit id-dukkaan min is-sukkar ʕitneen ṭinn* the shop's sugar quota is two tons. **2** level. *ʔil-ḥallaaq bi-ysaawi.ʃaʕr-u mizaniyya waḥda* the barber cuts his hair all one length.

اتوزن *ʔitwazan* /vi/ **1** to be weighed. **2** to balance or be balanced, be made level or even. - iva *mitwizin*.

انوزن *ʔinwazan* = *ʔitwazan*. - iva *minwizin*.

وازن *waazin* **1** /vi/ to make a comparison, note similarities and differences. *ʔana b-awaazin been if-faqqiteen dool* I am comparing between these two flats. **2** /vt/ **2a** to equal, have similar standing. *fi-naẓar-i l-ʕarabiyyiteen yiwaznu baʕḍ* in my opinion the two cars are alike. **2b** to balance. *waazin nafs-ak ʕal-ḥabl* balance on the rope! - vn *miwazna*; ava *miwaazin*.

اتوازن *ʔitwaazin* /vi/ passive of *waazin*. - iva *mitwaazin*.

توازن *tawaazun* /n/ equilibrium, balance. *ʔiḥfaẓ tawazn-ak* (1) keep your balance! (2) keep a level head!

اتّزن *ʔittazan* /vi/ to be well-balanced. *raagil muttazin* a level-headed man. - vn *ʔittizaan*; ava *mittizin, muttazin*.

و ز ى

وازى *waaza (i)* /vt/ **1** to be parallel with. *ʃaariʕ ramsiis yiwaazi ʃaariʕ silimaan baaʃa* Ramses Street runs parallel with Suleyman Pasha Street. *ʔiṣ-ṣoot laazim yiwaazi ṣ-ṣuura* the sound must match the picture. **2** to be commensurate with. *ʔil-ʔugra ma-twazii-ʃ it-taʕab* the pay is not commensurate with the effort. - vn *miwaziyya, muwazaah*↑; ava/pva *miwaazi*.

اتوازى *ʔitwaaza* /vi/ passive of *waaza*. - iva *mitwaazi, mutawaazi*.

متوازى *mutawaazi* /adj/ parallel. *mutawaazi l-ʔaḍlaaʕ* a parallelogram.

متوازيين *mutawaziyeen* /dual n/ *[gym]* parallel bars.

و س ب

وثب *wasb*↑ /n/ *[athl]* jumping. *ʔil-wasb il-ʕaali* high-jump. *ʔil-wasb' biz-zaana* pole vault. *ʔil-wasb iṭ-ṭawiil* long jump.

وثّاب *wassaab* /adj */ lively, enterprising. *rooḥ wassaaba* a dynamic nature.

و س خ

وسخ *wasax* /n/ **1** /pl *ʔawsaax*/ dirt, filth. ‖*wasax il-widaan* ear wax, cerumen. - *naas zayy' wasax il-widaan* unpleasant people. **2** /no pl/ excrement, faeces.

وسخ *wisix* /adj * and pl *ʔawsaax*/ dirty, filthy. ‖*ʔibn il-wisxa* son of a whore.

وسخان *wasaxaan* /vn/ soiling, dirtying.

أوسخ *ʔawsax* /el/ dirtier/dirtiest.

وساخة *wasaaxa* = *wasax*.

وسّخ *wassax* **1** /vt/ to dirty, soil. *ʔil-bint' wassaxit hudum-ha bif-fukulaata* the girl has made her clothes all dirty with the chocolate. ‖*ʕaayiz tiwassax ism-i* are you trying to blacken my name? **2** /vi/ to behave immorally, sink low (morally). *ʔil-bint' di wassaxit qawi* that girl has become very immodest. *wassax qawi fil-kalaam* he used foul language. - vn *tawsiix*; ava/pva *miwassax*.

اتوسّخ *ʔitwassax* /vi/ **1** to become dirty, become soiled. *timʃi xaṭwiteen fil-balad di wig-gazma titwassax* you go

two steps in this city and your shoes are dirty. **2** to be soiled. - ava/iva *mitwassax*.

اتّسخ *ʔittasax↑* /vi/ to become dirty, become soiled. *ʔil-yaaqa ttasaxit* the collar has become dirty. - vn *ʔittisaax*; ava *mittisix*.

استوسخ *ʔistawsax* /vt/ **1** to consider (too) dirty. *ʔistawsax il-ʔooḍa ḳaam baat barra* he thought the room dirty and so he slept outside. **2** to select for dirtiness. - vn *ʔistiwsaax*; ava *mistawsax*.

و س ط

واسطة *wasṭa* /n pl *wasaayiṭ*/ **1** one who deploys influence on another's behalf. *gab-lu wasṭa* he found him an intermediary. *wasṭit xeer* a conciliator, an influence for good. **2** recommendation, influence for obtaining advantage. *ʔitwazzaf bi-wasṭa* he got a job by pulling strings.

¶ *bi-wasṭit* /prep/ by means of. *bi-niktifif il-guzʔ il-maksuur bi-wasṭit ʕaghizit il-ḳiyaas* we discover the broken part by using meters.

وسط *wisṭ, wusṭ* /n/ **1** waist. *ḥaṭṭ[i] ʔiid-u f-wisṭ-u* he placed his hand on his hip. ‖ *timuut ir-raḳḳaaṣa w-wisṭ-a-ha bi-yilʕab* (a belly-dancer's waist goes on wiggling even when she's dying) ≈ one's habits stay with one forever. - *wisṭ-i txalaʕ mil-waḳfa* ≈ I'm about to collapse from standing for so long. **2** /w pron suff also *wisṭii-, wusṭii-*/ middle, centre. heart, midst. *wisṭ iṭ-ṭarabeeza* the middle of the table. *wisṭ il-balad* the city centre. *ḳuṣṣ il-xeeṭ fil-wisṭ* cut the thread in the middle. *fi-wisṭii-na* in our midst. ‖ *(fi-) wisṭ in-naas* in public, for everyone to see. - *wisṭ id-daar [rur]* central courtyard of a house.

وسطاني *wisṭaani, wusṭaani* /adj */ middle, central. see further under **و س ط ن**

وسطانيّة *wusṭaniyya* /n/ *[naut]* stern-post.

وسط *wasaṭ* **1** /adj/ medium, average, middle. *xayru l-ʔumuur il-wasaṭ* compromise is best. *xafiif wasaṭ [athl]* welterweight. — /n pl *ʔawsaaṭ*/ **2** agent, medium, instrument. **3** milieu. *ʔil-wasaṭ il-fanni* the artistic milieu. **4** average, middle. *min ʔawsaaṭ in-naas* from the common people.

أوسط *ʔawsaṭ↑* /adj, fem *wusṭa*/ middle, central. *ʔif-farq il-ʔawsaṭ* the Middle East. *ʔil-quruun il-wusṭa* the Middle Ages.

وساطة *wasaaṭa, wisaaṭa* /n pl *-aat*/ mediation, intervention.

وسيط *wasiiṭ* /n pl *wusaṭa*/ **1** medium (in spiritualism). **2** vehicle, medium. *laazim yikuun wasiiṭ fi-naḳl il-loon ʔila l-ḳumaaf* there must be a medium for transferring the colour to the cloth. ‖ *ʕaamil wasiiṭ* catalyst. — /adj/ **3↑** middle. *ʔil-ʕaṣr il-wasiiṭ* the Middle Ages.

أواسط *ʔawaasiṭ↑* /pl n/ (roughly) central part. *ḥa-yiwṣal fi-ʔawaasiṭ il-ʔusbuuʕ* he will arrive sometime around the middle of the week. *raagil min il-ʔawaasiṭ* an average man. *ʔawaasiṭ ʔurubba* Central Europe.

وسّط *wassaṭ* /vt/ **1** to use (s.o.) as an intermediary or a go-between. *ʔana m-aḥibb[i]-ʃ ḥadd[i] ywassaṭ-ni f-masaaʔil gawaaz* I don't like anyone to ask me to mediate in things to do with marriage. **2** to position or situate in the middle. *wassaṭ il-ḥizaam fiwayya* bring the belt more to the middle. - vn *tawsiiṭ*; ava/pva *miwassaṭ*.

اتوسّط *ʔitwassaṭ* /vi/ **1** to act as an intermediary or go-between. **2** to position or situate oneself in the middle. **3** to be placed or positioned in the middle. - ava/iva *mitwassaṭ*.

متوسّط *mutawassiṭ* /adj */ **1** medium, middle, intermediate. *ʔil-mooga l-mutawassiṭa [broadc]* medium wave. *ʔil-marḥala l-mutawassiṭa [educ]* intermediate school level. *muʔahhalaat* (or *ʃihadaat) mutawassiṭa* intermediate (secondary school level) certificates. ‖ *ʔil-baḥr il-ʔabyaḍ il-mutawassiṭ* the Mediterranean Sea. **2** average. *mutawassiṭ iṭ-ṭuul* of average height. *fil-mutawassiṭ* on the average.

اتواسط *ʔitwasiṭ, ʔitwaasaṭ* /vi/ to act as mediator or go-between. - ava *mitwaasiṭ*.

استوسط *ʔistawsaṭ* **1** /vt/ to select or make towards the middle. *ʔistawsaṭ wi-ʃiil* remove those that are in the middle. **2↓** /vi/ to act as a go-between. - ava *mistawsaṭ*.

و س ط ن see also **و س ط**

وسطن *wasṭan* /vt/ **1** to make average. *wasṭan il-fustaan* make the dress medium-fitting. *sitt[i] mwasṭana* a woman with an average build. *wasṭan il-ḥikaaya ʃwayya* ≈ let's compromise on the price. **2** to place in the middle. *wasṭan il-beet wasṭana maẓbuuṭa fig-gineena* he built the house right in the middle of the garden. - vn *wasṭana*; ava/pva *miwasṭan*.

اتوسطن *ʔitwasṭan* /vi/ to place oneself or be placed in the middle. - ava/iva *mitwasṭan*.

و س ع

وسع *wisiʕ (a)* /vi/ to become wide. - vn *wisʕ, wasaʕaan*; ava *waasiʕ*.

يساع، يسع *yisaaʕ, yisaʕ, yasaʕ↑* /vt imperf/ to be spacious enough to accommodate, have capacity for. *ʔil-ʔistaad bi-yasaʕ ḥawaali miit ʔalf* the stadium holds about a hundred thousand.

وسع *wisʕ* /n/ spaciousness, wideness. *ʔil-fustaan fii*

wisɛ the dress can be let out. ‖*fi wisɛ-* in the power of, as in *ʕuṭlub wi-lli f-wisɛ-i ʕaɛmil-u* state what you want and I'll do what I can, *ʕiɛmil kull illi f-wisɛ-ak* do your best.

وسعة *wisɛa* /n/ **1** abundance, wealth. ‖*min wisɛa* with plenty to spare, as in *ʕil-filuus kaffit. - min wisɛa* 'Was there enough money?' 'More than enough.' *wi-wṣiltu fil-maɛaad. - min wisɛa* 'Did you arrive in time?' 'With time to spare.' **2** magnanimity. *ma-ɛanduu-f wisɛa* he is petty-minded.

واسع *waasiɛ* /adj/ spacious, wide. ‖*ḥaṣiirit il-ʕahl' wasɛa* ≈ there's always room for more at a friend's or relative's house. *-sidr-u waasiɛ* he is patient. *-baṭn-u wasɛa* he is a swindler. *-muxx-u waasiɛ* he is broad-minded. *-zimmit-u wasɛa* he is unscrupulous. *-ɛala l-waasiɛ* on a large scale.

موسوعة *mawsuuɛa* /n pl *-aat*/ encyclopaedia. ‖*raagil mawsuuɛa* a very knowledgeable man.

سعة *siɛa* /n/ capacity. *ʕil-ɋizaaza di siɛat-ha litr' waaḥid* this bottle holds one litre.

وسعة *wasaɛa* /n pl *-aat*/ space, elbow room. *yalla niṭlaɛ barra fil-wasaɛa* let's go outside where there's room to breathe.

وسعاية *wasaɛaayà* /n pl *-aat*/ a capacious area. *ʕistanna fil-wasaɛaaya ɛandak* stay where you've got space. ‖*wasaɛaayit ɛabdiin* Abdin Square.

أوسع *ʔawsaɛ* /el/ **1** wider/widest. **2** roomier/roomiest.

وسّع *wassaɛ* **1** /vt/ to widen. *bi-ywassaɛu f-faariɛ ɋuddaam beet-i* they are widening the road in front of my house. *wassaɛ ʕamlaak-u* he increased his property holdings. ‖*wassaɛ madark-ak* broaden your mind. *-wassaɛ is-sikka* get out of the way! **2** /vi/ to make room. *ma-twassaɛu-lha fwayya* why don't you make a little room for her? ‖*ɋult' ya-lli f-wiff-i wassaɛuu-li* ≈ I took to my heels. -vn *tawsiiɛ*; ava/pva *miwassaɛ*.

¶ *wassaɛ ɛala* to cause to prosper. *rabb-i-na ywassaɛ ɛaleek* God grant you good fortune! *ʕil-waaḥid laazim yiwassaɛ ɛal-ɛiyaal fil-ɛiid* one should give the kids a good time (with food and presents) on the feast.

توسيعة *tawsiiɛa* /pl *-aat*/ instance noun of *tawsiiɛ*.

اتوسّع *ʕitwassaɛ* /vi/ to be widened. -iva *mitwassaɛ*.

توسّع *tawassuɛ↑* /n pl *-aat*/ expansion, widening. *ḥaṣal tawassuɛ fi-ʕaɛmaal if-firka* there was an increase in the company's activities.

اتّسع *ʕittasaɛ* /vi/ **1** to widen, become wide. *kaan fii xlaaf basiiṭ ittasaɛ min ɤeer ma ḥadd' yuqṣud* there was a simple disagreement which spread through no one's intention. **2** to have capacity. *ʕil-ʕooḍa di b-tittisiɛ li-xamsiin nafar* this room holds fifty people. -vn *ʕittisaaɛ*; ava *mittisiɛ, muttasiɛ*.

استوسع *ʕistawsaɛ* /vt/ **1** to consider (too) wide. *ʕistawsaɛ il-badla w-raggaɛ-ha lit-tarzi* he thought the suit too loose and returned it to the tailor. **2** to select for width. *ʕistawsaɛ kursi w-ɋaɛad fii* he chose a wide chair and sat in it. -vn *ʕistɨwsaaɛ*; ava *mistawsaɛ*.

و س ق ¹

وسق *wasaq' (ɨ)* /vt/ to load. *wasaq il-ḥumaar* he loaded the donkey. *markib mawsuuqa* a loaded boat. -vn *waasiq*; pva *mawsuuq*.

و س ق ²

وثق *wasaq², wasiq↑ (yiwsiq, yasiq↑)* /vi/ to have confidence, trust. *siq tamaaman ʕinni b-aḥibb-ak* (you can) be very sure that I love you. -vn *siqa, siqa↑*; ava *waasiq*; pva *mawsuuq*.

ثقة *siqa, siqa↑* /n/ trust, confidence. *ɛadam is-siqa* mistrust, lack of confidence.

وثيق *wasiiq, wasiiq↑* /adj */ firm, strong. *ṣadaaqa wasiiqa* strong friendship.

وثيقة *wasiiqa↑, wasiiqa* /n pl *wasaaʕiq↑, wasaayiq*/ document, evidence.

أوثق *ʔawsaq, ʔawsaq* /el/ **1** more/most trustworthy. **2** firmer/firmest.

ميثاق *misaaq↑, misaaq* /n pl *mawasiiq↑*/ agreement, charter. *ʕil-misaaq (il-waṭani)* Egypt's National Charter.

اتوثق *ʕitwasaq* /vi/ (impersonal) passive of *wasaq²*. *da raagil ma-yitwasaq-f' fii* that man is not to be trusted. -iva *mitwisiq*.

وثّق *wassaq, wassaq↑* /vt/ **1** to attest, authenticate. *ʕil-mubayɛa b-duun tawsiiq ma-tinfaɛ-f* an unauthenticated bill of sale is worthless. **2** to strengthen. *balaaf tiwassaq ṣilat-ak big-gadaɛ da* don't deepen your relationship with that guy. -vn *tawsiiq, tawsiiq*; ava *miwassaq, muwassiq↑*; pva *miwassaq, muwassaq*.

موثّق *muwassiq* /n */ notary public.

اتوثق *ʕitwassaq, ʕitwassaq↑* /vi/ **1** to be attested, be authenticated. **2** to be strengthened. -iva *mitwassaq, mitwassaq↑*.

استوثق *ʕistawsaq, ʕistawsaq* /vt/ to make certain of, verify. *ruuḥ istawsaq il-xabar minnu faxṣiyyan* go and verify the information from him personally. -vn *ʕistiwsaaq*; ava *mistawsiq*.

و س ك ى

ويسكى *wiski* <Engl> /n/ whisky.

و س ل

وسيلة *wasiila* /n pl *wasaayil, wasaaʕil*/ means, way.

bi-kull il-wasaayil il-mumkina by all possible means. *ʔil-ɣaaya tubarrir il-wasiila* the end justifies the means. *wasaaʔil il-muwaṣlaat* means of transportation. *wasaaʔil il-ʔiḍaaḥ* explanatory aids.

اتوسّل *ʔitwassil, ʔitwassal* /vi/ to plead, make an entreaty. *b-atwassal ʔileek tisamiḥ-ha* I beg you to forgive her. - ava *mitwassil*.

توسّل *tawassal*[1] /vi/ to beg, make a plea. - vn *tawassul*; ava *mutawassil*.

توسّلات *tawassulaat* /pl n/ *[Isl]* songs of supplication to God sung by the muezzin prior to the dawn prayer and by professionals at the celebrations of saints' birthdays.

و س م

وسام *wisaam* /n pl *ʔawsima*/ medal. *wisaam il-gumhuriyya min id-daraga t-talta* Order of the Republic, Third Class.

وسامة *wasaama* /n/ beauty, good looks. *fiiha wasaama* she's good-looking.

وسيم *wasiim* /adj */ handsome, good-looking. *ʃakl-u wasiim* he is good-looking.

أوسم *ʔawsam* /el/ more/most handsome.

موسم *muusim, mawsim* /n pl *mawaasim*/ **1** season. *da muusim il-burtuqaan* this is the season for oranges. **2** (public) occasion (usually religious). *ʔil-ʔaɛyaad wil-mawaasim* feasts and festivals. *muusim sabɛa w-ɛiʃriin ragab* the feast of the twenty-seventh of (the month of) Ragab.

موسمي *muusimi, mawsimi*[1] /adj */ seasonal. *ɛamal muusimi* seasonal work. *ʔir-riyaaḥ il-muusimiyya* the monsoon winds.

اتوسّم *ʔitwassim, ʔitwassam* /vt/ to sense or detect (a feeling). *ʔitwassamt[1] fiik ir-rayba fil-musaɛda* I sensed that you wanted to help. *laqeet raagil fiʃ-ʃaariɛ itwassamt[1] fii l-xeer xalleet iʃ-ʃanṭa ɛandu* in the street I found a man I felt to be honest and left the bag with him. - ava *mitwassim*.

و س ن

وثن *wasan* /n pl *ʔawsaan*/ idol. *ʔil-ɣarab qabl in-nabi kaanu b-yiɛbudu l-ʔawsaan* before the Prophet the Arabs used to worship idols.

وثني *wasani* /adj */ pagan, idolatrous.

وثنيّة *wasaniyya* /n/ paganism, idolatry.

و س و س [1]

وسوس *waswis*[1] /vi/ to bud, form buds (of cotton). *ʔil-quṭn ibtada ywaswis* the cotton began to bud. - vn *waswasa*; ava *miwaswis*.

وسواس *wiswaas*[1] /coll n/ cotton bud(s).

و س و س [2]

وسوس *waswis*[2] /vi/ to instil evil, awaken doubt. - vn *waswasa*; ava *miwaswis*.

وسوسه *waswasa* /n/ wariness, suspicion, the state of being obsessive.

موسوس *miwaswis* /adj */ obsessed, finicky.

وسواس *wiswaas*[2] /n/ **1** /pl *wasaawis, wasawiis*/ obsessive suspicion. **2** *ʔil-wiswaas* the Tempter, Satan.

اتوسوس *ʔitwaswis* /vi/ **1** to become obsessive, become suspicious, become doubtful. **2** (impersonal) passive of *waswis*[2]. *ʔitwaswis-lu* bad ideas were put into his head. - ava *mitwaswis*.

و س ي [1]

وسيّة *wisiyya* /n pl *wasaaya*/ **1** *[obsol]* large estate (particularly one belonging to members of the royal family). **2** place in which graft and embezzlement are indulged in unchecked. *ʔiʃ-firka baqit wisiyya* the company has become something free for the taking.

و س ي [2]

واسى *waasa* /vt/ to comfort, console. - vn *muwasaah*; ava *miwaasi, muwaasi*.

اتواسى *ʔitwaasa* /vi/ to be comforted, be consoled. - iva *mitwaasi*.

و س ي م

وسيمى *wiseemi* /adj/ type of sheep (from Oussim in Egypt) characterized by its thin tail (in contrast with the *baladi* type).

و ش ح

وشح *waʃʃaḥ* /vi/ to sing *tawaʃiiḥ*. - vn *tawʃiiḥ*; ava *miwaʃʃiḥ*; pva *miwaʃʃaḥ*.

توشيح *tawʃiiḥ* /n pl *tawaʃiiḥ*/ stanzas of classical Arabic poetry sung in praise of the Prophet.

موشّح *muwaʃʃaḥ* /n pl *-aat*/ lyrical poetry set to music (of Andalusian origin). ‖*ɛamal muwaʃʃaḥ* to cause a commotion, cause a fuss, as in *miraat-u dayman bi-tiɛmil-lu muwaʃʃaḥ lamma b-yitʔaxxar* his wife always gives him a lot of trouble when he's late.

موشّحاتي *muwaʃʃaḥaati* /n pl *-yya*/ singer of *muwaʃʃaḥaat*.

و ش ش [1]

وش *wiʃʃ* /n pl *wuʃuuʃ, wiʃuuʃ, wiʃaaʃ, ʔawʃaaʃ*/ **1** face (of a person or animal). *wiʃʃ-u nɛaaṣ ʃukulaata* his face was smeared with chocolate. *wiʃʃ-u lis-sabbuura* he is facing the blackboard. ‖*ḥooḍ wiʃʃ* wash-basin. - *kal wiʃʃ(-u)* to reproach (s.o.), as in *ʔin-naas kalit wiʃʃ-i*

kminni skitt[a] *ɛal-mawḍuuɛ da* people reproached me for having kept silent about this subject. - *xad wiff-a-ha* he deflowered her. - *ʕir-raagil da b-wiffeen* that man is two-faced. - *wiff-ak wala l-ɑamar* long time, no see! - *ɛala mala wiff-u* in haste and under constraint, as in *ga l-ɛaskari xad-u l-ɑism*[a] *ɛala mala wiff-u* the policeman came and bundled him off to the station. - *ʕawaddi wiff-i (minnu) feen* I am very embarrassed (to see him). - *ma-luu-ʃ wiff' ykallim-ni* he's too embarrassed to talk to me. - *ma-ʕiddet-hum-ʃ' wiff* I ignored them. - *bi-kull' wiff' makfuuf* brazenly. - *wiff' fil-ʕarḍ* embarrassed, as in *xalleetu wiff-i fil-ʕarḍ* you caused me great embarrassment. - *la wiff-ak wala ḍahr-ak* that's all there is to it, and that's that. - *wiff-u yiɑṭaɛ il-xamiira min il-beet* he brings bad luck with him. - *fil-wiff' mraaya w-fil-ɑafa sillaaya [prov]* ≈ he'll smile to your face and stab you in the back. - *wiɑif fi-wiff(-u)* to stand up to (s.o.). - *fi-wiff-u wala tɤiff-u* frankly, without beating around the bush. - *wiff-u zayy' ɑafaa* in bad shape, badly beaten. - *zayy' wiff-u* bad, no-good, awful, as in *ʕiddet-lu kilmiteen zayy' wiff-u* I gave him one hell of a telling-off. - *wi-ʕaadi wiff iḍ-ḍeef* and no more was heard from (him), as in *xad ig-gineeh wi-ʕaadi wiff iḍ-ḍeef* he took the pound and has never been heard from since. - *xad gineeh bi-wiff-u* he got a whole pound. - *ya wiff-* how impudent, how cheeky, as in *ya wiff-ak lamma tistilif min ɛayyil ṣuɤayyar zayy' da* it's shameless of you to borrow money from a small child like that. - *di f-wiff-i ʕana* this reflects badly on me. - *ʕana ma-b-addi-luu-ʃ wiff* I don't encourage him. - *wiff-u f-wiff-i* I'm face to face with him. - *wiff-u ḫilw*[a] (or *wiḫif*) *ɛalayya* he brings good (or bad) luck to me. **2** mask. *laabis wiff* he's wearing a mask. *wiff' lḫaam* welder's mask. **3a** surface, upper surface, outer layer. *ʕil-muṣawwaraati dalaɑ il-madda ɛala wiff iz-zinka* the photographer poured the substance on the surface of the zinc plate. *fii samna ɛala wiff' ṣniyyit il-baṭaaṭis* there is clarified butter over the top of the dish of potatoes. ‖ *wiff il-ɑahwa* foam on the surface of Turkish coffee. - *wiff il-laban* the skin of the milk (e.g., after boiling). - *wiff ig-gazma* vamp of a shoe. **3b** front, façade. *raas il-xaruuf miɛallaɑa ɛala wiff is-sandara* the sheep's head is hung on the front of the loft. *wiff is-sideeri* the front of the vest. ‖ *buus ʕiid-ak wiff' w-ḍahr* (kiss the front and back of your hand) be grateful to God. - *wiff ik-kabbaas* screw-top on a pump-cylinder (of, e.g., a primus stove). - *ḫ-axd-u min wiff-ak* I'll spare him your attention. - *ɤuur min wiff-i* get lost! **3c** side. *ʕil-mutoor marbuuṭ bi-musmaar min in-nuṣṣ' w-lu ṣamulteen mil-wifaaf* the engine is attached by a bolt in the centre and two rivets on the sides. ‖ *wiff il-ʕusṭuwaana* the side of a gramophone record. - *wiff il-ɑumaaf* the right side of the fabric. **4** layer, coat. *dahan il-ʕooḍa wiff' buuya* he gave the room a coat of paint. ‖ *ʕaaxir wiff [agric]* last crop of the season produced by an everbearing plant. - *ḫalaɑ ḍaɑn-u wiffeen* he shaved his face twice. - *xad ig-gild' wiff' taʃɛiir* he went over the hide once (with a razor) removing the hair. — /in constr/ **5** the type for, the sort cut out for. *baayin ɛaleeha mif wiff' niɛma* she seems not to be cut out for the soft life. *da wiff' suguun* he's a jailbird. *da mif wiff' kida* he isn't that sort. *da mif wiff' ʃuɤl* he's not the hard-working type. *ḍa mif wiff' gawaaz* he is not the marrying type. *da wiff' faɑr* he's poverty prone. **6** verge, proximity, brink. *baɑeena (f-)wiff iṣ-ṣubḫ* it is nearly morning. *ɛala wiff id-daraga l-xamsa* about to attain the fifth (civil service) grade.

وشّش *waffif* /vt/ to arrange with an attractive top layer. *da raagil ɤaffaaf - waffif ɑafaṣ il-manga w-ɑalb il-ɑafaṣ kull-u manga xasraana* the man's a swindler - he's put a layer of good mangoes on top of the crate, but inside it's full of rotten ones. - vn *tawfiif*; ava/pva *muwaffif*.

اتوشّش *ʕitwaffif* /vi/ passive of *waffif*. - iva *mitwaffif*.

و ش ش[2]

وشّ *waff'* *(i)* /vi/ to buzz, hum. *widaan-i bi-ṭṣaffar wi-bi-twiff* my ears are whistling and buzzing. - vn *waff, waʃaʃaan*; ava *waaʃif*.

وشّ *waff*[2] /n/ **1** hum, shushing sound. **2** craziness, idiocy. *ɛandu waff* he's dotty. — /adj invar/ **3** crazy, idiotic. *raagil waff* a screwball of a man. *mihna waff* a maddening profession.

اتوسّ *ʕitwaff* /vi/ to become crazy. *ʕinta twaffeet fi-ɛaɑl-ak* have you gone mad? - ava *mitwaff*.

و ش ك

وشك *waʃak, waʃk: ɛala waʃak* or *ɛala waʃk* on the point of, as in *waṣalna l-maktab wi-huwwa ɛala waʃk innu yiɑfil* we reached the office just as it was about to close.

وشيك *waʃiik* /adj */ near, imminent *ḫall' waʃiik* an imminent solution.

أوسك *ʕawʃak* /vi/ **1** to be about (to do s.th.) *ʕis-sana d-dirasiyya ʕawʃakit ʕinnaha tixlaṣ* the academic year is about to finish. **2** to draw near. *ʕil-ɛiid ʕawʃak* the feast is nearly with us. - ava *muuʃik*↑.

و ش م

وسم *waʃam*↑ *(i)* /vt/ to tattoo, have tattooed. *waʃam-lu ʕasad ɛala sidr-u* he had a lion tattooed on his chest. - vn

waʃm; ava *waaʃim*; pva *mawʃuum*.

وشم *waʃm* /coll n/ tattoo(s), tattooing.

وشمة *waʃma* /unit n, pl *-aat*/ a tattoo.

اتوشم *ʔitwaʃam* /vi/ to be tattooed. -iva *mitwiʃim*.

و ش ن

وِسْنة *wiʃna* <T *viʃne*> /n/ sour cherry, morello cherry.

و ش و ش

وشوش *waʃwiʃ* /vt/ to whisper to (s.o.). *nadaht ir-rayyis wi-waʃwiʃt-u ʕalaʃaan ma-ħadd-ʃ yismaʕ* I called the waiter and whispered in his ear so that no one could hear. ‖*waʃwiʃ id-dakar* (1) *[magic]* whisper to the male (sea-shell) and tell it what you want to know about (said to customers by fortunetellers who use sea-shells for soothsaying). (2) *[joc]* come tell it all to papa. -vn *waʃwaʃa*; ava/pva *miwaʃwiʃ*.

وشوشة *waʃwaʃa* /n/ whisper. ‖*(ʕilm) il-waʃwaʃa* method of psychomancy in which the medium allegedly communicates with spirits by whispering.

اتوسوش *ʔitwaʃwiʃ* /vi/ **1** to whisper. *ʔit-talamza kaanu b-yitwaʃwiʃu maʕa baʕḍ* the students were whispering together. **2** (impersonal) passive of *waʃwiʃ*. *bi-tḥibb-i yitwaʃwiʃ laha* she loves to be whispered to. -vn *tiwaʃwiiʃ*; ava/iva *mitwaʃwiʃ*.

و ش ى

وسى *waʃa (i)* /vi/ to inform (on s.o.). *waʃa biihum lil-buliiṣ* he betrayed them to the police. -ava *waaʃi*.

وشاية *wiʃaaya* /n pl *-aat*/ (defamatory) tale, (malicious) gossip.

اتوشى *ʔitwaʃa* /vi/ (impersonal) passive of *waʃa*. *ʔitwaʃa bii lil-buliiṣ* he was betrayed to the police. -iva *mitwiʃi*.

وسّى *waʃʃa↑ (i)* /vt/ to embroider. -vn *tawʃiyya*; ava *miwaʃʃi, muwaʃʃi*; pva *miwaʃʃi, muwaʃʃa*.

اتوسّى *ʔitwaʃʃa* /vi/ to be embroidered. -iva *mitwaʃʃi*.

و ص ف

وصف *waṣaf (i)* /vt/ **1** to describe. *ʔizzaay niqdar niwṣif it-taṣarruf da* how can we describe this behaviour? -/ the literary passive form occurs/ *laa yuuṣaf* beyond description. **2** to prescribe. *bi-yiwṣifuu-ha lin-naas illi ʕayza tbaṭṭal is-sagaayir* they prescribe it for people who want to give up cigarettes. -vn *waṣf*; ava *waaṣif*; pva *mawṣuuf*.

وصف *waṣf* /n pl *ʔawṣaaf*/ **1** description. *ʔil-waṣf it-tafṣiili lil-mutoor* the detailed description of the motor. *ħaaga tfuuq il-waṣf* something indescribable. ‖*ʔitqaṭaʕ waṣf-u* it is unique, there is nothing like it any more. *-bi-waṣf-* in the capacity of, as in *ʔana b-akallim-ak bi-waṣf-i mudiir if-firka di* I am speaking to you in my capacity as director of this company. **2** *ʔawṣaaf* /pl n/ characteristics, qualities. *ʔil-ħuṣaan il-ʕarabi lu ʔawṣaaf muʕayyana* the Arab horse has certain characteristics. *kaamil il-ʔawṣaaf* immaculate.

وصفة *waṣfa* /n pl *-aat*/ **1** set of instructions or directions. *qult-i-lhum waṣfit il-beet ʕalaʃaan yilaqquu b-suhuula* I gave them directions to the house so they could find it easily. **2a** prescription. *waṣfa baladi* folk remedy, folk prescription. *waṣfa lil-ħabal ma-txayyib-ʃ* an infallible method for becoming pregnant. **2b** recipe. *waṣfit keek* cake recipe.

وصفى *waṣfi* /adj */ descriptive. ‖*fahrasa waṣfiyya* descriptive cataloguing.

صفة *ṣifa* /n pl *-aat*/ **1** characteristic, quality, attribute, trait. *ʔawħaf ṣifa fii hiyya k-kidb* the worst thing about him is his lying. **2** position, capacity. *ʔeeh ṣifat ħaḍrit-ak fil-mawḍuuʕ da* what is your concern with this matter?! *bi-tkallim-ni b-ṣifat ʔeeh. - bi-ṣifat-i waaħid tihimm-u maṣlaḥt-ak* 'Who are you to be speaking to me?' 'I am speaking as one who is concerned for your welfare.' *dafaʕ il-mablaɣ bi-ṣifat taʔmiin* he paid the sum of money as a surety. ‖*bi-ṣifa* in a (certain) manner, as in *biṣ-ṣifa xaaṣṣa* especially, *bi-ṣifa ʕaagila* urgently. *-ma-luu-ʃ ṣifa* of no consequence, as in *da mawḍuuʕ ma-luu-ʃ ṣifa bil-marra* this is a very trivial matter indeed, *ma-luu-ʃ ṣifa maʕaana* he has nothing to do with us.

وصيفة *waṣiifa* /fem n, pl *-aat, waṣaayif*/ *[obsol]* lady-in-waiting.

مواصفات *muwaṣafaat* /pl n/ **1** specifications. *ħa-niʕmil il-magaari ħasab muwaṣafaat il-ħukuuma* we'll make the drains according to government specifications. **2** properties, qualities. *ʔil-qumaaʃ da lu muwaṣafaat munasba l-ʕamaliyyit iṣ-ṣibaaɣa* this cloth has properties which make it suitable for dyeing.

اتوصف *ʔitwaṣaf* /vi/ **1** to be described. ‖*ma-twaṣaf-ʃ* unique, the likes of which have never been seen, as in *balwa ma-twaṣafit-ʃ* an unprecedented calamity. **2** to be prescribed. -iva *mitwiṣif*.

انوصف *ʔinwaṣaf* = *ʔitwaṣaf*. -iva *minwiṣif*.

وصّف *waṣṣaf (a)* /vt/ to extol, enumerate the qualities of. *min yoom ma rigʕu w-humma qaʕdiin yiwaṣṣafu (fi-)lli ʃafuu f-makka* since their return they have been continually describing what they saw in Mecca. -vn *tawṣiif*; ava/pva *miwaṣṣaf*.

اتوصّف *ʔitwaṣṣaf* /vi/ passive of *waṣṣaf*. -iva *mitwaṣṣaf*.

اتصف *ʔittaṣaf↑* /vi/ to possess as a characteristic, quali-

ty, or peculiarity. *ʔil-mudarris in-naagiḥ bi-nagid ʔinnu b-yattaṣif bi-baʕḍ' ṣifaat il-qaaʔid* we find that the successful teacher is marked by some of the qualities of leadership. - vn *ʔittiṣaaf*; ava *mittaṣif, muttaṣif.*

مستوصف *mustawṣaf* /n pl *-aat*/ welfare clinic.

و ص ل

وصل *wiṣil*[1], *waṣal*[1] *(a)* /vt and vi/ **1** to reach, come to. *lamma niwṣal (li-)makka ninzil fi-beet il-muṭawwif* when we arrive at Mecca we stay at the pilgrim guide's house. *laazim il-ʔigaar yiwṣal-ni ʔawwil if-ʃahr* I must get the rent on the first of the month. *waṣal-li gawaab ʔimbaariḥ* I got a letter yesterday. **2** to attain. *ʔil-muwaẓẓaf wiṣil (li-)daraga muʕayyana* the civil servant reached a certain grade. *ʔana wiṣilt id-daraga s-sadsa* I reached the sixth grade. **3** to extend to, reach as far as. *ḥitat il-ʔarḍ illi l-lawwaaṭa ma-b-tiwṣal-haa-ʃ* parts of the ground which the drag does not reach. **4** to become as much as. *fiṣ-ṣeef il-burtaqaan bi-yiwṣal (li-)gineeh il-kiilu* in summer oranges go up to a pound a kilo. *saʕaat ṭul-ha yiwṣal (li-)mitreen* sometimes it reaches two metres in length. **5** to go (somewhere) briefly and return. *xallii-k hina ʕala baal ma ʔawṣal il-beet* stay here while I nip over to the house. *wiṣil mifwaar* he's gone on an errand (but will soon be back). — /vi/ **6** to arrive. *goz-ha wiṣil wi-tʕaffa* her husband came (home) and had his supper. ‖ *la ʔ ma-tiwṣal-ʃ* no, it won't come to that. - *ʔilli ḥaṣal waṣal* ≈ it's no use crying over spilt milk. **7** to arrive (at an objective). *ʔid-daggaal yiwṣal li-natiiga tuʕtabar ʕagiiba* the impostor achieves a result which is considered amazing. *mif ḥa-niwṣal li-ḥall* we shall not arrive at a solution. ‖ *ʕaayiz yiwṣal bi-ʔayy' ṭariiqa* he wants to succeed by any means. - vn *wuṣuul*; ava *waaṣil.*

وصل *waṣal*[2], *wiṣil*[2] *(i)* /vt/ to link, join together. *ʔiwṣil il-ḥittiteen dool fi-baʕḍ* join these two pieces together. - vn *waṣalaan, waṣl*; ava *waaṣil*; pva *mawṣuul.*

وصول *wuṣuul* /n/ arrival. ‖ *ʕilm' wuṣuul [communic]* receipt of delivery for a registered parcel or letter.

وصولى *wuṣuuli* /adj */ opportunist. *raagil wuṣuuli* opportunist, social climber.

وصوليّة *wuṣuliyya* /n/ unscrupulous self-seeking, opportunism, sycophancy.

وصل *waṣl* /n pl *wuṣulaat, wuṣúla*/ receipt. *bi-niḥfaẓ wuṣulaat il-ʔigaar li-ʔinn' ṣaaḥib il-beet ḥaraami* we keep our rent receipts because the landlord is a crook.

وصله *waṣla* /n pl *-aat*/ **1** joint, connection. *ʔig-gild' fii waṣla* there is a joint in the leather. **2** section. *ḥuṭṭ' kamaan waṣla lil-masuura* add another section to the pipe. **3** through-way. *fii waṣla ʂurayyiba min hina ʕala ʃaariʕ silimaan* there's a short cut from here to Suleyman Pasha Street. **4** one of several songs or other items in a performance, each followed by an interval. **5** extra supply, refill (in café jargon). *haat waṣlit sukkar* bring some more sugar. *haat waṣla liʃ-ʃuʃa* bring another piece of charcoal for the water-pipe.

موصول *mawṣuul* /n/ *[mus]* pipe of the *muzmaar* type, constructed so that joints may be added or removed to change the key.

صلة *ṣila, ṣila* /n pl *-aat*/ connection, link. *fii benna ṣilit ḥubb* there's a love-relationship between us. *ṣilit ʂaraaba* family connection.

أوصال *ʔawṣaal* /pl n/ limbs, members (of the body). *ʔin-nafaaṭ dabb' f-ʔawṣaal-i* I felt a burst of energy in my limbs.

اتوصل *ʔitwaṣal* /vi/ passive of *waṣal*[2]. - iva *mitwaṣal.*

وصّل *waṣṣal* /vt/ **1a** to convey, take from one place to another, deliver. *ʔil-ʕarabiyya di ʕaʃaan tiwaṣṣal-u ʃ-ʃuɣl* this car is for taking him to work. *ʔis-saaʕi bi-ywaṣṣal ig-gawabaat* the office-boy delivers the letters. **1b** to accompany from one place to another. *ḥ-awaṣṣal-ak li-ḥadd' ma tirkab it-taks* I'll go along with you till you get a taxi. **2** *[elec]* to conduct. *ʔin-naḥaas gayyid it-tawṣiil lik-kahraba* copper is a good conductor of electricity. **3** to connect, join. *ʔil-xarṭuum bi-ywaṣṣal id-dooraq bil-mabsam* the hose connects the glass jar (of the water-pipe) to the mouth-piece. — /vi/ **4** to act as a connection. *ʔil-masuura di bi-twaṣṣal been is-sifoon wik-kabineeh* this pipe connects the cistern and the lavatory. - vn *tawṣiil*; ava *miwaṣṣal, muwaṣṣil*; pva *miwaṣṣal, muwaṣṣal.*

توصيلة *tawṣiila* /n pl *-aat, tawaṣiil*/ **1** *[elec]* contact, connection. **2** ride (from one point to another). *ʔiddaa-lu tawṣiila lil-madrasa* he gave him a lift to the school. **3** connecting road. *tawṣiila liz-zaqaziiq* a road that leads to Zagazig.

موصّل *muwaṣṣil* /n pl *-aat*/ *[elec]* conductor. *muwaṣṣil gayyid* a good conductor.

موصّلاتى *miwaṣṣalaati* /n pl *-yya*/ *[deris]* messenger, go-between.

اتوصّل *ʔitwaṣṣal* /vi/ passive of *waṣṣal.* - iva *mitwaṣṣal.*

توصّل *tawaṣṣal*[1] /vi/ to attain, achieve. *tawaṣṣal li-ḥall* he arrived at a solution. - vn *tawaṣṣul*; ava *mutawaṣṣil.*

واصل *waaṣil, waaṣal* /vt/ **1** to continue, persevere in. *yiwaaṣil il-ʕibaada leel maʕa nhaar* he goes on praying day and night. **2** to have a love affair with. - vn *wiṣaal, muwaṣala*; ava *miwaaṣil.*

وصال *wiṣaal* /n/ **1** meeting (of lovers), (lovers') tryst.

ʕana ţaalib il-wiṣaal I want a get-together with my love. **2** close relationship, communion, mutual understanding. *rabb-i-na ydiim il-wiṣaal* may God keep (us) always close to each other.

مواصلة *muwaṣla* /n pl *-aat*/ means of transport. *bi-yiḥṣal kitiir ʕinn in-naas miʃ laqya muwaṣla trawwaḥ-hum* it often happens that people can find no way to get home. *ɛaawiz yilḥaq ʃuɤl-u qabl[i] zaḥmit il-muwaṣlaat* he wants to get to work before the rush hour. ‖ *wizaarit il-muwaṣlaat* Ministry of Communications.

اتواصل *ʔitwaaṣil, ʔitwaaṣal* /vi/ passive of *waaṣil*. - iva *mitwaaṣil*.

متواصل *mutawaaṣil* /adj/ continuous. *ɛamaliyyaat mutawaṣla* continuous operations.

أوصل *ʔawṣal↓: ʔeeʃ ʔawṣal-ak ʔinta liihum* you don't reach their standards.

إيصال *ʔiṣaal, ʔiiṣaal↑* /n pl *-aat*/ receipt. *bi-ygib-li ʔiṣaal muɛtamad mil-xaziina* he's bringing me a receipt approved by the cashier's office.

اتّصل *ʔittaṣal* /vi/ **1** to be in contact, get in touch. *ma-ʔaɛraf-ʃ attaṣil biik* I don't know how to get in touch with you. *ḫ-attaṣil biik bukra bit-tilifoon* I'll tell you tomorrow. **2** to be connected. *ʔil-ʔaks[i] mittiṣil bid-darabuks* the axle connects with the gear-box. ‖ *raagil muttaṣil* a well-connected man. - vn *ʔittiṣaal*; ava *mittiṣil, muttaṣil*.

اتصال *ʔittiṣaal* /n pl *-aat*/ connection, link. *kunt[i] b-akallim-u bit-tilifoon lamma l-ittiṣaal itqaṭaɛ* I was talking to him on the phone when we were cut off. *ʔis-safiir lu ʔittiṣalaat wasɛa* the ambassador has extensive connections. *ʔittiṣaal ginsi* sexual intercourse. ‖ *ɛala ttiṣaal* in contact with, as in *xallii-k ɛala ttiṣaal big-gamɛa* stay in contact with the university. - *ɛamal ittiṣalaat* to get in touch with people.

استوصل *ʔistawṣal↓* /vi/ to find out, discover or detect after great effort. *ʔana ḫ-astawṣal luhum lamma ykuunu taḥt il-ʔarḍ* I'll find them even if they're at the other end of the earth. ‖ *huwwa-ḫna nistawṣal* ≈ we cannot place ourselves on the same high level as yourself (polite response to a suggestion of equality between the two speakers). - ava *mistawṣal*.

و ص م

وصمة *waṣma↑* /n pl *-aat*/ disgrace, mark of disgrace, blemish. *di waṣma f-sumɛit il-ɛeela* this is a slur on the family's reputation. *waṣmit ɛaar* great shame.

و ص ى

وصى *waṣi* /n pl *ʔawṣiya*/ legal guardian. ‖ *waṣi ɛala l-ɛarf* regent.

وصاية *wiṣaaya* /n/ **1** guardianship. *ʔil-wiṣaaya titfakk[a] ɛannak baɛd[i] sana* your guardianship ends in a year's time. **2** mandate. **3** recommendation. *kaan mitɛayyin bi-wṣaaya* he was appointed because of a recommendation.

وصيّة *wiṣiyya, waṣiyya* /n pl *waṣaaya*/ **1** advice. *di wṣiyyit-i lik* this is my advice to you. ‖ *ʔil-waṣaaya l-ɛaʃr* the Ten Commandments. **2** last will and testament. *fataḫu l-wiṣiyya w-qaruu-ha* they opened the will and read it. *ʔil-waṣiyya l-wagba [leg]* compulsory will in which a man whose son has died leaving children is obliged to bequeath to those children that share of his estate which their father would have inherited.

وصّى *waṣṣa (i)* /vt/ **1** to enjoin, direct. *waṣṣeet-u yrawwaḥ ţawwaali* I urged him to go home immediately. *ʔilli waṣṣa ɛaleeha l-ḫakiim* ≈ just what the doctor ordered, as in *ɛalɛa mi-lli waṣṣa ɛaleeha l-ḫakiim* just the thrashing needed. ‖ *ma-twaṣṣi-nii-ʃ* don't press me (I am already aware of the necessity). **2a** to enjoin the concern of (s.o.). *waṣṣit-ni ɛal-wilaad* she asked me to take care of the kids. *ʔibqa waṣṣi l-mudiir ɛala-bn-i* do recommend my son to the director. *ʔin-nabi waṣṣa ɛala saabiɛ gaar* ≈ even the most distant neighbour should be given good treatment. **2b** to solicit the help of (s.o., in obtaining something). *ʔibqa waṣṣi l-furn[a] ɛala keeka ɛalaʃaan il-ḫafla* get the bakery to prepare (or send) a cake for the party. - vn *tawṣiyya*; ava *miwaṣṣi*.

¶ *waṣṣa bi-* to bequeath. *waṣṣit bi-kull[i] sarwit-ha lil-quṭṭa* she bequeathed all her wealth to the cat.

توصيّة *tawṣiyya* /n pl *-aat*/ recommendation. *ma-ḫadd[i]-ʃ yitɛayyin fil-wizaara min ɤeer tawṣiyya* no one can get a job in the ministry without a recommendation.

موصّى *muwaṣṣa* /pva/ ‖ *muwaṣṣa ɛalee [communic]* registered (of the mail).

اتوصّى *ʔitwaṣṣa* /vi/ **1** to behave considerately or generously. *ʔig-gazzaar bi-yitwaṣṣa biyya ɛaʃaan ibn-u ɛandi fil-faṣl* the butcher gives me special treatment because his son is in the class I teach. ‖ *ʔitwaṣṣaa-bu* give him a hard time! - *da ma-yitwaṣṣaa-ʃ* he is terrible. **2** passive of *waṣṣa*. - ava/iva *mitwaṣṣi*.

أوصى *ʔawṣa↑* /vi/ to make a bequest. *ʔawṣat-li b-kull illi ɛandaha* she bequeathed to me everything she had. - ava *muuṣi*; pva *muuṣa*.

يوصي *yiwṣi↓* /vt, imperf only/ to urge, advise. *ʔawṣii-k ɛumr-ak ma-tkallim in-naas dool* I urge you never to talk to these people.

و ض ء see **و ض ى**

و ض ب

وضّب *waqḍḍab* /vt/ to prepare, put in order, adjust, arrange. *ʃis-sikirtiira waqḍḍabit-li muqabla maʕa l-mudiir* the secretary arranged a meeting with the director for me. *laazim ʃawaḍḍab il-ʕarabiyya* I must get the car fixed. *baṣṣ' fil-miraaya w-waḍḍab nafs-u* he looked in the mirror and tidied himself up. *waḍḍabi l-ʃakl[a] ʕala baal ma ʃargaʕ* have the food ready by the time I come back. *waḍḍab ig-gariida [journ]* to lay out the pages. ‖*qism it-tawḍiib [print]* layout division. - *waḍḍab il-qaṭr [communic]* to couple a train. - *xud-u ya ʕaskari waḍḍab-u* officer, take him and teach him a lesson! - vn *tawḍiib*; ava/pva *miwaḍḍab*.

موضّب *muwaḍḍib* /n */ *[print]* layout specialist.

موضّباتي *miwaḍḍabaati* /n pl *-yya/ [print]* layout specialist.

اتوضّب ʃitwaḍḍab /vi/ to be prepared, put in order, adjusted or arranged. - iva *mitwaḍḍab*.

و ض ح

وضح *waḍaḥ (a)* /vi/ to become clear, become obvious. *ʃil-masʃala waḍaḥit dilwaqti* the matter has become clear now. - vn *wuḍuuḥ*; ava *waaḍiḥ*.

واضح *waaḍiḥ* /adj */ clear, obvious.

أوضح ʃawḍaḥ[1] /el/ clearer/clearest.

وضّح *waḍḍaḥ* /vt/ to explain, clarify. *miʃ ʕaarif ʃawaḍḍaḥ il-mawḍuuʕ* I don't know how to clarify the matter. - vn *tawḍiiḥ*; ava/pva *miwaḍḍaḥ*.

توضيحي *tawḍiiḥi* /adj/ illustrative, explanatory. *ʃiddii-ni rasma tawḍiḥiyya l-mutoor il-ʕarabiyya* give me an illustrative drawing of the car engine.

اتوضّح ʃitwaḍḍaḥ /vi/ to be explained, be clarified. - iva *mitwaḍḍaḥ*.

أوضح ʃawḍaḥ[2↑] /vt/ to clarify. - vn *ʃiiḍaaḥ*.

إيضاح ʃiḍaaḥ, ʃiiḍaaḥ /n/ clarification. *wasaaʃil il-ʃiḍaaḥ [educ]* explanatory aids.

اتّضح ʃittaḍaḥ /vi/ to become clear. *ʃittaḍaḥ liina ʃinn' miʃ huwwa lli kaan hina leelit ʃimbaariḥ* it became evident to us that it wasn't he who was here last night. - vn *ʃittiḍaaḥ*; ava *mittiḍiḥ*.

استوضح ʃistawḍaḥ /vt/ to seek (and gain) clarification of. *ʃana stawḍaḥt il-ḥikaaya min ʃawwil-ha l-ʃaxir-ha* I clarified the matter from beginning to end. - vn *ʃistiwḍaaḥ, ʃistiḍaaḥ*; ava *mistawaaḥ*.

و ض ع

وضع *waḍaʕ (yiwḍaʕ, yaḍaʕ↑)* /vt/ **1** to put, place. *leeh tiwḍaʕ nafs-ak fil-mawqif il-muḥrig da* why are you placing yourself in this embarrassing situation? *laazim taḍaʕ maṣlaḥit ʃixwaat-ak fi-ʕtibaar-ak* you should take the interests of your brothers and sisters into consideration. ‖*waḍaʕ yadd-u ʕal-ʕimaara* he took possession of the building by occupancy. - *waḍʕ il-yadd* (1) squatters' rights. (2) *[Chr]* laying on of hands. - *waḍaʕ taqriir* to make a report. - *ʃinta waḍaʕt' xitm-ak ʕaleeha [abus]* (have you placed your seal on it?) have you taken possession of it? **2** to establish, set up. *ʃil-ḥukuuma waḍaʕit nizaam gidiid* the government established a new system. **3** to give birth. *waḍaʕit binayya zayy il-qamar* she gave birth to a very pretty little girl. *ʃagaazit waḍʕ* maternity leave. - vn *waḍʕ*; ava *waaḍiʕ*; pva *mawḍuuʕ*.

وضع *waḍʕ* /n pl *ʃawḍaaʕ/* **1a** position, location. *bi-taaxud nafs il-waḍʕ' btaaʕ is-siriir* it takes the same position as the bed. **1b** position, status. *il-mudiir lu waḍʕ-u* the director has his own status. **2** situation. *ʃil-waḍʕ' kaan fawḍa* the situation was chaotic. **3** pose. *xad laha ṣuwar fi-ʃawḍaaʕ muxtalifa* he took pictures of her in different poses.

موضوع *mawḍuuʕ* /n pl *mawaḍiiʕ, mawḍuʕaat/* **1** subject, topic, theme. *ʃixtaar mawḍuuʕ wi-ktib ʕalee* choose a subject and write about it. *ʃeeh mawḍuuʕ ir-risaala* what's the topic of the thesis? **2** matter, affair, business. *ʃana faayil ʃiid-i min il-mawḍuuʕ da* I'm washing my hands of this affair. *kaan il-mawḍuuʕ maafi mazbuuṭ* everything was going along fine. ‖*ʃil-mawḍuuʕ ʃinn-* the fact of the matter is, as in *ʃil-mawḍuuʕ ʃinnu tgawwiz il-bint* the fact of the matter is that he married the girl.

موضوعي *mawḍuuʕi↑* /adj */ **1** objective. *xallii-na mawḍuʕiyyiin fil-munaqʃa* let's be objective in the discussion. **2** according to subject. *taṣniif mawḍuuʕi* classification according to subject.

¶ *mawḍuʕiyyan↑* /adv/ objectively. *laazim tinaqiʃ-ni mawḍuʕiyyan* you've got to discuss with me objectively.

وضاعة *waḍaaʕa* /n/ baseness, meanness. *raagil fi-ʏaayit il-waḍaaʕa* a very contemptible man.

وضيع *waḍiiʕ* /adj */ base. *ʃaxlaaq waḍiiʕa* low manners.

أوضع ʃawḍaʕ /el/ baser/basest.

موضع *mawḍiʕ* /n pl *mawaaḍiʕ/* place, spot. *fi-nafs il-mawḍiʕ* on the same spot.

موضعي *mawḍiʕi* /adj */ local. *bing' mawḍiʕi* local anaesthetic.

اتوضع ʃitwaḍaʕ /vi/ passive of *waḍaʕ*. - iva *mitwiḍiʕ*.

انوضع ʃinwaḍaʕ = ʃitwaḍaʕ. - iva *minwiḍiʕ*.

اتواضع ʃitwaaḍaʕ /vi/ to be humble, act in a modest way. *wi-lli yitwaaḍaʕ yibqa ʏalṭaan* is he who behaves

modestly at fault? - vn *tawaaduɛ↑*; ava *mitwaadiɛ, mutawaadiɛ*.

اتّضاع *ʔittiḍaaɛ* /n/ humility, modesty, self-effacement.

استوضع *ʔistawḍaɛ* /vt/ to consider base. *lamma ʃufna ʔafɛaal-u stawḍaɛnaa* when we saw the way he behaved we marked him out as a low type. - ava *mistawḍaɛ*.

و ض ى

وضوء *wuḍuww, wiḍuww* /n/ *[Isl]* ritual ablution before prayer. *ʔil-ʔinsaan illi ɛaayiz yiṣalli laazim yitwaḍḍa wuḍuww[i] maẓbuuṭ* a person who wishes to pray must perform the ritual ablutions correctly.

ميضة *meeḍa* /n pl *-aat*/ fountain for ablutions in a mosque.

وضّى *waḍḍa* /vt/ *[Isl]* **1** to assist (s.o.) to perform ritual ablutions before prayer. *taɛaala lamma ʔawaḍḍii-k* come, I'll help you wash for prayer. **2** to suffice (of water) for the performing of the ablution. *ʔil-mayya di twaḍḍi ɛafara* this is enough water for ten (i.e. a lot of people) to wash for prayer. - vn *tawḍiyya*; ava *miwaḍḍi*.

اتوضّى *ʔitwaḍḍa* /vi/ *[Isl]* to perform ritual ablutions. - vn *tawḍiyya*; ava *mitwaḍḍi*.

و ط ء see و ط ى

و ط د

وطيد *waṭiid↑* /adj */ firm. *ṣadaaqa waṭiida* strong friendship.

أوطد *ʔawṭad* /el/ firmer/firmest.

وطّد *waṭṭad* /vt/ to make firm, strengthen. *waṭṭad ɛilaqt-u biiha* he strengthened his relationship with her. *ʔana waṭṭadt[i] nafs-i ɛala kida* I inured myself to the situation. - vn *tawṭiid*; ava/pva *miwaṭṭad*.

اتوطّد *ʔitwaṭṭad* /vi/ to be made firm, be strengthened. - iva *mitwaṭṭid*.

و ط ر [1]

وطّر *waṭṭar* /vt/ to frame (a space) for the purpose of construction or decoration. - vn *tawṭiir*; ava/pva *miwaṭṭar*.

اتوطّر *ʔitwaṭṭar* /vi/ passive of *waṭṭar*. - iva *mitwaṭṭar*.

و ط ر [2]

وطر *waṭar* /n pl *ʔawṭaar*/ objective, aim, end. *lamma xad waṭar-u minha sab-ha w-raaḥ li-ɤer-ha* when he had got what he wanted out of her, he left her and went off to someone else.

و ط ن

وطن *waṭan* /n pl *ʔawṭaan*/ homeland, nation.

وطني *waṭani* /adj */ **1** national. ‖ *ʔil-ḥayy il-waṭani [obsol]* the native quarter. **2** patriotic, nationalistic.

وطنيّة *waṭaniyya* /n/ patriotism, nationalism.

موطن *mawṭin↑* /n pl *mawaaṭin*/ **1** native place, home town. *ʔeeh il-mawṭin il-ʔaṣli btaaɛ-ak* where do you come from originally? **2** source, centre. *laazim ɋism il-ʔitfaaʔ yinabbih in-naas ɛala mawaaṭin il-xuṭuura f-buyut-hum* the fire department ought to alert people to sources of danger in their homes. *mawaaṭin iḍ-ḍaɛf* points of weakness.

مواطن *muwaaṭin* /n */ citizen.

وطّن *waṭṭan* /vt/ **1** to cause to settle down. *tawṭiin il-badw* the settling of the nomads. **2** to accustom, get (s.o.) used (to s.th.). *ma-yṣaḥḥ[i]-ʃ tiwaṭṭan-hum ɛala kida* you shouldn't get them used to this. *laazim tiwaṭṭani nafs-ik min dilwaqti ɛala ʔinnik misafra mɛaaya* you must get yourself accustomed from now on to the fact that you are going away with me. - vn *tawṭiin*; ava/pva *miwaṭṭan*.

اتوطّن *ʔitwaṭṭan* /vi/ **1** passive of *waṭṭan*. **2** to settle, take up residence in a new place. *ʔitwaṭṭanu fi-skindiriyya* they took up residence in Alexandria. **3** to become endemic. *ʔil-bilharsiya twaṭṭanit fi-maṣr[i] min zamaan* bilharziasis became endemic in Egypt a long time ago. - vn *tawaṭṭun*; ava/iva *mitwaṭṭan*.

استوطن *ʔistawṭan* /vt/ **1** to settle, take up residence in a new place. **2** to become endemic. *ʔamraaḍ mustawṭina* endemic diseases. - vn *ʔistiiṭaan↑*; ava *mistawṭan, mustawṭin*; pva *mistawṭan, mustawṭan*.

و ط و ط

وطواط *wiṭwaaṭ, waṭwaaṭ* /n pl *waṭawiiṭ*/ *[zool]* bat. *ɛamliin zayy il-waṭawiiṭ* (they are behaving just like bats) they never come out before dark.

و ط ى

وطى *wiṭi (a)* /vi/ **1** to become low(er), decrease in height. *ʔil-mayya wiṭyit fil-biir* the water (level) in the well has gone down. ‖ *ɛili walla wiṭi* whatever his standing, whatever people say of him. **2** to become quiet(er). *ṣoot-u wiṭi* his voice became quieter. **3** to become low(er) (in pitch). **4** to fall, decrease (statistically). *daragit il-ḥaraara wiṭyit* the temperature fell. **5** to decline, fall (morally, socially etc.). - vn *wiṭiww*; ava *waaṭi*.

واطى *waaṭi* /adj */ **1** low. *mayyit in-niil waṭya fiṣ-ṣeef* the water of the Nile is low in summertime. ‖ *ʔil-ḥuruuf il-waṭya* (1) Arabic letters which dip below the line. (2) lower case letters in the Latin alphabet. - *gaab ɛalii-ha waṭii-ha* he turned everything upside-down, he

upset things completely. - *ʕil-muus fii ɛaali w-waaṭi* the razor blade is dented. - *ma-bi-yḥuṭṭ'-f waaṭi ʕabadan* he never acts humbly. **2** subdued, low. *ḍaṿṭ' waaṭi* low pressure. **3** quiet. *ṣoot waaṭi* a quiet voice. **4** low in pitch. **5** base, inferior. *ʕaxlaaq waṭya* low moral standards. *naas waṭyiin* ill-mannered people.

وطأة *waṭʕa* /n/ pressure, intensity. *ʕil-maraḍ xaffit waṭʕit-u* the illness let up.

وطا *waṭa* /n/ footwear. || *ʕibn il-waṭa* low bastard! - *baqa ɛaamil zayy il-waṭa* he was reduced to shame-faced silence.

أوطى *ʕawṭa* /el/ lower/lowest.

وطّى *waṭṭa* /vt/ **1** to lower, make low. *waṭṭi ktaaf-ak fiwayya* lower your shoulders a bit. **2** to quieten. *waṭṭi r-radyu* turn down the radio! *waṭṭi ṣoot-ak* lower your voice! **3** to cause to fall (statistically). *ʕid-dawa ḥa-ywaṭṭi ḍ-ḍaṿṭ* the medicine will lower the blood pressure. **4** to cause to decline (morally, socially etc.). *ʕabuu-ya waṭṭaa-ni w-gooz-i ɛallaa-ni* (my father lowered my rank but my husband raised me) I married into a higher class. — /vi/ **5** to bend down. *waṭṭa ɛala-bn-u* he bent over his son. **6** to become lower, go down. *ʕiṭ-ṭayyaara ɛammaala twaṭṭi* the plane is continuing to lose height. **7** to become quiet(er). *ʕir-radyu waṭṭa xaalıṣ* the radio became very faint. - vn *tawṭıyya*; ava/pva *miwaṭṭi*.

اتوطّى *ʕitwaṭṭa* /vi/ passive of *waṭṭa*. - iva *mitwaṭṭi*.

تواطى، تواطأ *tawaaṭa↑* /vi/ to connive. - vn *tawaaṭuʕ*; ava *mutawaaṭi*.

استوطى *ʕistawṭa* /vt/ **1** to consider (too) low. *ʕistawṭa l-ʕooḍa ma-rḍii-f yiskin fiiha* he wouldn't live in the room because he thought the ceiling too low. **2** to select for lowness. *ʕistawṭa wi-ggawwiz* he selected (a girl) from a lower class and married (her). - vn *ʕistiwṭa*; ava *mıstawṭı*.

و ظ ب

أوظب *ʕawẓab* /el/ more/most regular.

واظب *waaẓib, waaẓab* /vi/ to act regularly. *ʕiṭ-ṭaalib ık-kuwayyis bi-ywaẓib ɛala d-duruus* a good student attends classes regularly. - vn *muwaẓba*; ava *miwaẓib*.

اتواظب *ʕitwaaẓib* /vi/ (impersonal) passive of *waaẓib*. *ʕid-dawa laazim yitwaaẓib ɛalee* the medicine should be taken regularly. - iva *mitwaaẓib*.

و ظ ف

وظيفة *waẓiifa* /n pl *waẓaayif, waẓaaʕif↑*/ **1** employment, job, situation, *ʕiɛlanaat waẓaayif* situations vacant ads. *waẓıfa mın ɣeer waẓiifa* a job with no function, sinecure. **2** function. *waẓiifit il-ɛaddaad ʕinnu yiḥsib l-istihlaak* the function of the meter is to keep account of consumption. *ɛilm waẓaaʕif il-ʕaɛḍaaʕ* physiology.

وظيفي *waẓiifi↑* /adj/ of or pertaining to employment. *ʕis-sillim il-waẓiifi [admin]* the employment scale.

وظّف *waẓẓaf* /vt/ to employ, make use of. *waẓẓaf-ni fiʃ-ʃirka btaɛt-ak* give me employment in your company. *fii ḥaaga maʕmuuna twaẓẓaf fiiha fluus-ak* is there something safe for you to invest your money in? - vn *tawẓiif*; ava/pva *miwaẓẓaf*.

موظّف *muwaẓẓaf* /n */ **1** government official, civil servant. *bukra ʕagaaza l-muwaẓẓafiin il-ḥukuuma* tomorrow is a holiday for government employees. **2** white-collar worker. *ʕabuu-ya muwaẓẓaf fil-bank* my father is a bank employee.

اتوظّف *ʕitwaẓẓaf* /vi/ to obtain employment, especially as a white-collar worker. *baɛd' ma txallaṣ taɛliim-ak ḥa-titwaẓẓaf wi-titgawwiz* after you've finished your education you will get a job and get married. - ava *mitwaẓẓaf*.

استوظف *ʕistawẓaf↓* /vi/ to obtain a post or employment. *ruuḥ ʕistawẓaf-lak fi-ʃirka* go find yourself a job with a company. *ʕabuu stawẓaf fi-wzaarit ir-rayy* his father obtained a post with the Ministry of Irrigation. - ava *mistawẓaf*.

مستوظف *mustawẓaf↓* /n */ one who has a job with the government or a company.

و ظ و ظ

وظوظ *waẓwiẓ, waẓwaẓ* /vi/ *[joc slang]* to mature (of a girl), become nubile. *ʕil-bitt' waẓwaẓit marra waḥda* the girl bloomed all of a sudden. || *lamma twaẓwaẓ* ≈ not on your life! - vn *waẓwaẓa*; ava *miwaẓwaẓ*.

وظوظة *waẓwuuẓa* /fem adj, pl *waẓawiiẓ/ [joc slang]* voluptuous (of a girl). -/nominally/ *ʕil-waẓawiiẓ* the girls.

و ع ء

و ع ء see ² و ع ى : *wıɛaaʕ*

و ع ب

استوعب *ʕistawɛab* /vt/ **1** to hold, have room for. *ɛawziin ʕooḍa wasɛa tistawɛib magmuɛaat kibıira* we need a large room that can hold big groups. **2** to comprehend, understand, grasp the meaning of. *ʕistawɛabu d-dars* they mastered the lesson. *ʕistawɛabna n-naksa* we realized the significance of the (1967) defeat (and learnt from it). - vn *ʕistiɛaab*; ava/pva *mistawɛib*.

و ع د

وعد *waɛad (i)* /vt/ **1** to promise. *ʕabuu waɛad-u b-*

ʕarabiyya his father promised him a car. ʃawʕid-ak niqaḍḍi yoom fil-haram I promise you we'll spend a day at the Pyramids. **2** to provide (of God). *rabb-i-na waʕad-ni bil-ḥagg* God has enabled me to make the pilgrimage. ‖*di lil-mawʕudiin miʃ lil-ḥassiiba [prov]* (good fortune is) for those who have it provided by God, and not for those who scheme and plan. - vn *waʕd*; ava *waaʕid*; pva *mawʕuud*.

وعد *waʕd* /n pl *wuʕuud*/ **1** promise. **2** provision (from God). ‖*ya waʕd-i* expression of praise and admiration, as in ʃaxuu-ya ʃtara ʕarabiyya gdiida ya waʕd-i ʕaleeha my brother bought a wonderful new car! - *da waʕd^{i} w-maktuub* it is all predestined (said in times of disaster). - ʃis-saʕd^{i} *waʕd* good fortune is a gift from God. - *ḥa-tistilaqqa waʕd-ak* you'll get the punishment you deserve.

موعود *mawʕuud* **1** /adj/ prescribed, stipulated. *fil-yoom il-mawʕuud* on the appointed day. **2** /n */ fortunate one. *da min il-mawʕudiin* he's a lucky man.

وعدة *wiʕda* /n pl *-aat*/ commitment, pledge. *kaan fii wiʕda beeni w-beenu* he and I were mutually committed.

وعيد *waʕiid* /n/ wrath. *xaaf min waʕiid rabb-i-na wi-mʃi kwayyis* fear the wrath of God and behave yourself.

موعد *mawʕid*↑ /n pl *mawaʕiid*/ appointed time. ‖*mawaʕiid il-qaṭr* train timetable.

ميعاد *maʕaad, miʕaad* /n pl *mawaʕiid*/ **1** appointed time, set time. *ma-bi-yguu-ʃ fi-mawaʕiid iʃ-ʃuɣl il-maẓbuuṭa* they don't come to work on time. *miʕaad il-ɣada qarrab* it's nearly lunch time. **2** appointment, engagement. *ʕandi mʕaad is-saaʕa sitta* I have an appointment at six o'clock. *laazim taxdi mʕaad min id-duktuur* you should make an appointment with the doctor. *mawaʕiid-u miʃ maẓbuuṭa* he is not punctual. — *mawaʕiid* /pl n/ **3** timetable, schedule. *mawaʕiid is-sikka l-ḥadiid* the railway timetable.

اتوعد *ʃitwaʕad* /vi/ **1** to be promised. **2** to be granted good fortune. *ʃin ʃa-lla titwiʕid* may you have similar good fortune (said on happy occasions such as a marriage, a visit to Mecca etc.). - iva *mitwiʕid*.

انوعد *ʃinwaʕad* = *ʃitwaʕad*. - iva *minwiʕid*.

اتوعّد *ʃitwaʕʕad* /vt/ to threaten. *ʃil-mudiir itwaʕʕad-u quddaam zumalaat-u* the manager threatened him in the presence of his colleagues. - ava/pva *mitwaʕʕad*.

واعد *waaʕid, waaʕad* /vt/ to make an appointment with, arrange to meet (s.o.). ʃana *ma-waʕidt-ak-ʃ^{i} ʕal-waqt^{i} da* I did not make an appointment with you for this time. - vn *miwaʕda*; ava *miwaaʕid*.

اتواعد *ʃitwaaʕid* /vi/ to make an appointment with one another. - ava *mitwaaʕid*.

أوعد *ʃawʕad* = *waʕad*.

استوعد *ʃistawʕid* /vt/ to threaten. *ʃistawʕid-u b-ʕalqa* he threatened to thump him. - ava *mistawʕid*.

و ع ر

وعورة *wuʕuura*↑ /n/ ruggedness.

واعر *waaʕir* /adj */ *[slang]* rugged, dangerous. *sikka waʕra* a rough road. ‖*raagil waaʕir* unscrupulous man. - *mara waʕra* highly-sexed woman. - *ʕeen-u waʕra* he's an insolent shameless man. - *siniin waʕra* hard times.

استوعر *ʃistawʕar* /vi/ to become wild. - ava *mistawʕar*.

و ع ز

وعز *waʕaz*↑ *(i)* /vi/ to give an intimation. *ʃeeh illi waʕaz-lak bil-fikra di* what put this idea into your head? - ava *waaʕiz*; pva *mawʕuuz*.

أوعز *ʃawʕaz*↑ = *waʕaz*. - vn *ʃiiʕaaz*; ava *muuʕiz*; pva *muuʕaz*.

و ع ظ

وعظ *waʕaẓ (i, a)* /vt/ to give religious instruction to, preach to. *baʕd^{i} ma nismaʕ il-qurʃaan il-waaʕiẓ bi-yiwʕiẓ in-naas* after we have listened to the Koran the preacher preaches to the people. - vn *waʕẓ, waʕaẓaan*; ava *waaʕiẓ*; pva *mawʕuuẓ*.

وعظ *waʕẓ* /n/ sermon, lecture.

وعظة *waʕẓa* /n pl *-aat*/ *[Chr]* homily, sermon.

واعظ *waaʕiẓ* /n pl *wuʕʕaaz*/ preacher.

عظة *ʕiẓa*↑ /n pl *-aat*/ sermon, lecture.

موعظة *mawʕiẓa* /n pl *mawaaʕiẓ*/ **1** speech, sermon. **2** sign (from God). *haziimit yunyu kaanit mawʕiẓa min allaah* the June defeat was a lesson from God.

اتوعظ *ʃitwaʕaẓ* /vi/ to be edified, learn a lesson. *ʃismaʕ kalaam ʃabuu-k wi-twiʕiẓ minnu* listen to what your father says and learn from it. - ava/iva *mitwiʕiẓ*.

انوعظ *ʃinwaʕaẓ* = *ʃitwaʕaẓ*. - ava/iva *minwiʕiẓ*.

اتّعظ *ʃittaʕaẓ*↑ = *ʃitwaʕaẓ*. - ava/pva *mittiʕiẓ*.

استوعظ *ʃistawʕaẓ*↓ /vi/ to take heed, be taught a good lesson. - ava *mistawʕaẓ*.

و ع ع

وعّ *waʕʕ (i)* /vt/ to vomit. *waʕʕ illi f-baṭn-u* he vomited what was in his stomach. - vn *waʕʕ, waʕaʕaan*; ava *waaʕiʕ*.

وعّ *wiʕʕ* /n/ sound of vomiting. *qaal wiʕʕ* he started to vomit.

و ع ك

وعكة *waʕka* /n pl *-aat*/ mild sickness.

موعوك *mawɛuuk* /adj */ suffering from a mild sickness or indisposition.

اتوعك ʔitwaɛak /vi/ to become slightly ill, become indisposed. -ava *mitwiɛik*.

اتوعّك ʔitwaɛɛak = ʔitwaɛak. -vn *tawaɛɛuk*; ava *mitwiɛik*.

و ع و ع

وعوع *waɛwaɛ* /vi/ to whimper or snivel out of weakness and cowardice. -vn *waɛwaɛa*; ava *miwaɛwaɛ*.

[1] و ع ى

وعى *wiɛi (a)* /vi/ **1** to take care. *wiɛi li-fluus-u* he took good care of his money. **2** to take heed, pay attention. *wiɛi lil-kalaam illi tqaal* he took heed of what was said. **3** to (be old enough to) retain a memory (of s.th.). *ʔana m-awɛaa-ʃ ɛal-ħarb il-ɛaalamiyya t-tanya* I don't remember the Second World War. *ʔana ma-wɛit-ʃ' l-gidd-i* I wasn't old enough to know my grandfather. **4** to move away. *wiɛi min gamb iṭ-ṭarabeeza* he moved away from the edge of the table. *ʔiwɛa mis-sikka* get out of the way! *ʔiwɛa kida xalli l-hawa yxuff* move away and let the air come in. -vn *waɛy, waɛayaan*; ava *waaɛi*.

¶ *ʔiwɛa* or *ʔiwɛaa-k* /imper; fem *ʔiwɛi* or *ʔiwɛaa-ki*, pl *ʔiwɛu* or *ʔiwɛaa-ku*/ (1) /w foll imperf of *kaan*/ let it not be that. *ʔiwɛa tikuun ħa-timʃi* I hope you won't be going away. *ʔiwɛa tkuun ħaṣalit ħaaga* I hope that nothing has happened. (2) /with foll verb other than *kaan*/ don't, be careful not to. *ʔiwɛu timʃu min hina* don't leave this place! *ʔiwɛa tɛaddi l-ɛataba* be careful not to cross the threshold. (3) /with no foll verb; *ʔiwɛa*, *ʔiwɛi*, *ʔiwɛu* only/ be careful (of)! watch out (for)!. *ʔiwɛa raas-ak* watch your head! *ʔiwɛa t-tiɛbaan* be careful of the snake! *ʔiwɛa l-ɛiyaal* watch out for the kids!

وعى *waɛy* /n/ consciousness, awareness. *ʁaayib ɛan* (or *faaqid) il-waɛy* unconscious. *law ɛandaha feeʔ min il-waɛy' kaanit tiɛraf titṣarraf ʔizzaay* if she had her wits about her she would know how to behave. ‖*ma-huwwaa-ʃ fi-waɛy-u* he's not in his right mind.

واعى *waaɛi* /adj */ **1** aware, attentive. *ʔil-mulaqqin laazim yikuun waaɛi ʔasnaaʔ ɛarḍ il-masraħiyya* the prompter must pay close attention during the performance of the play. **2** experienced in the ways of the world. *raagil waaɛi* a man who knows his way around. **3**↓ grown-up (of a child). *walad waaɛi* a big boy.

أوعى ʔawɛa /el/ **1** more/most aware or attentive. **2** more/most grown-up.

وعّى *waɛɛa* /vt/ **1** to make aware (especially of danger), caution. *laazim tiwaɛɛi l-waad wi-tfahhim-u* you've got to make the boy aware and explain to him. **2** to indoctrinate. *tawɛiyit il-gamaahiir* indoctrinating the masses. -vn *tawɛiyya, tawɛiyaʔ*; ava *miwaɛɛi*.

اتوعّى ʔitwaɛɛa /vi/ **1** to be made aware, be cautioned. **2** to be indoctrinated. -iva *mitwaɛɛi*.

استوعى ʔistawɛa /vt/ **1** to consider or deem aware. **2**↓ to consider (a child) grown-up. -ava/pva *mistawɛi*.

[2] و ع ى

وعى *wiɛy* /coll n/ crockery, pots and pans. *baɛd il-ʁada iʃ-ʃaʁʁaala b-tiʁsil il-wiɛy* after lunch the maid washes the dishes.

وعاية *wiɛaaya, waɛaaya* /n pl *-aat*/ cooking-pot, pan.

وعاء *wiɛaaʔʔ* /n pl *ʔawɛiya*/ container, receptacle. *ʔil-ʔawɛiya l-limfawiyya* the lymph nodes. *ʔil-ʔawɛiya d-damawiyya* the blood vessels. ‖*wiɛaaʔ ḍariibi* tax bracket.

و غ د

وغد *waʁd* /adj pl *ʔawʁaad*/ scoundrelly.

و غ ر

أوغر *ʔawʁarʔ* /vt/ to provoke to animosity. *ʔeeh illi ʔawʁar ṣadr-ak ɛalee* what caused you to have these bad feelings about him? -ava *miwʁir*; pva *mawʁuur*.

وغش see و ا غ ش: *waaʁif*

و غ ل

اتوغل *ʔitwaʁʁil* /vi/ to make progress, advance, make (good) headway. *huwwa twaʁʁil fit-tigaara ɋawi* he got on very well in business. -ava *mitwaʁʁil*.

و غ و ش

وغوش *waʁwiʃ, waʁwaʃ* /vt/ to cause to be anxious or doubtful. *kalaam id-duktuur waʁwiʃ-ni xaaliṣ* what the doctor said worried me a great deal. -vn *waʁwaʃa*; ava/pva *miwaʁwiʃ*.

اتوغوش *ʔitwaʁwiʃ* /vi/ to become or be made anxious. -ava/iva *mitwaʁwiʃ*.

وفاء see و ف ى: *wafaaʔ*

و ف د

وفد *wafad (i)* /vi/ to come from a distance, especially as a delegate or delegation. *bi-yiwfid ɛala maṣr' suyyaaħ kitiir* many tourists come to Egypt. -vn *wafadaan, wufuud*; ava *waafid*.

وافد *waafid* /n */ visitor from abroad. ‖ *ʕidaarit il-waafidiin* office responsible for foreign students in Egypt.

وفد *wafd, wafd* /n pl *wufuud*/ delegation. *wafdⁱ maṣrⁱ f-hayʕit il-ʕumam* Egypt's delegation at the UN. ‖ *ʕil-wafd (il-maṣri)* Egypt's largest political party before the 1952 Revolution.

اتوافد *ʕitwaafid* /vi/ to arrive in number and in succession, come in waves. - ava *mitwaafid*.

أوفد *ʕawfad* /vt/ to send (a delegate). *ʕig-gamʕa ḥa-tiwfid ṭalbeen li-faransa ʕaʃaan yidrisu ʕadab* the university will send two students to France to study literature. *ʕana muufad min ʕand if-firka* I have been sent on behalf of the company. - vn *ʕifaad*; ava *muufid*; pva *muufad*.

و ف ر

وفر *wafr* /n pl *wufuraat*/ savings. *wufuraat il-mizaniyya* unspent balance in the budget. ‖ *ʕummaal wufuraat* workers discharged as redundant.

وفرة *wafra* /n/ abundance. *bi-wafra* abundantly.

أوفر *ʕawfar* /el/ **1** more/most abundant. **2** more/most economical.

وفير *wafiir* /adj */ abundant.

وافر *waafir* /adj */ abundant. *gamaal waafir* great beauty.

وفّر *waffar* /vt/ **1** to save, save up. *waffaru flus-ku w-hatu-lku tilifizyoon* save up your money and buy yourselves a television. ‖ *daftar tawfiir* a post-office savings book. **2** to be sparing with, economize on. *waffar taʕb-ak* spare yourself the trouble. *ʕiʃ-ʃirka ḥa-twaffar xamsiin ʕaamil* the company will economize (by laying off) fifty workers. ‖ *ʕilli ʕandu kilma ywaffar-ha* keep your opinions to yourself! **3** to provide in abundance. *waffarit-lu kullⁱ wasaaʕil ir-raaḥa* she got everything together to make him comfortable. - vn *tawfiir*; ava *miwaffar*.

اتوفّر *ʕitwaffar* /vi/ **1** to become abundant, become plentiful. *ʕiṣ-ṣabuun itwaffar fis-suuq* soap has become freely available on the market. **2** to be saved up. **3** to be economized on. *ʕummaal kitiir itwaffaru* a lot of workers were laid off (as a part of an economy drive). - ava/iva *mitwaffar*.

اتوافر *ʕitwaafar* /vi/ **1** to become abundant. **2** to be fulfilled (of conditions). - vn *tawaafur*↑; ava *mitwaafir, mutawaafir*↑.

و ف ق

وفق *wifq* **1** /n/ accord, harmony, agreement. *ʕahammᵃ ḥaaga fil-gawaaz il-wifqⁱ been is-sittⁱ w-goz-ha* the most important thing in marriage is harmony between the woman and her husband. **2** /prep/ according to. *door il-mudarris bi-yitɣayyar wifq iḥtiyagaat iṭ-ṭalaba* the role of the teacher changes according to the needs of the students.

¶ *wifqan*↑ *li-, wufqan li-* in accordance with. *wifqan liṭ-ṭalabaat* in accordance with the requests.

أوفق *ʕawfaq* /el/ more/most appropriate, suitable or harmonious.

وفاق *wifaaq, wifaaq*↑ /n/ concord, harmony. *ma-fii-ʃ wifaaq beenu w-been miraat-u* there is no harmony between him and his wife. *ʕil-wifaaq id-dawli* international détente.

وفّق *waffaq* /vt/ **1** to harmonize, match up. *ʕandi bluuza ʕayza ʕawaffaq laha ʕiʃarb* I have a blouse for which I want to find a matching scarf. ‖ *waffaq raseen fil-ḥalaal* to arrange a marriage, make a (marital) match. - *ma-gamaʕ ʕilla-mma waffaq [prov]* ≈ birds of a feather flock together. **2** to grant success to. *rabb-i-na waffaq-ni fil-imtiḥaan bi-ʃakl* God granted me a great success in the exam. *wa-ma-tawfiiq-i ʕilla bi-llaah* I can only succeed with God's help. -/the literary passive occurs/ *wuffiq fi-ʕamal-u* he was successful in his work. **3** *[mus]* to tune (instruments of an orchestra) to a given pitch. - vn *tawfiiq*; ava/pva *miwaffaq*.

¶ *waffaq been* to make peace between. *law ḥawiltⁱ twaffaq benhum ḥa-tiṣbaḥ ʕinta l-ʕadiww* if you were to try to make peace between them you would become the enemy.

التوفيقيّة *ʕit-tawfiqiyya* /prop n/ district of central Cairo, between Midan el-Tawfiqiya and Ramses Street, renowned for its fruit, vegetable and meat market.

توافيق *tawafiiq*↑ /pl n/ mathematical combinations.

اتوفّق *ʕitwaffaq* /vi/ **1** to agree together. **2** to be brought into agreement. - ava/iva *mitwaffaq*.

وافق *waafiq* **1** /vi/ to agree, consent. *ʕahammᵃ ḥaaga hiyya ʕinnⁱ ʕabuu-ha ywaafiq ʕal-gawaaz* the most important thing is that her father should agree to the marriage. *ʕil-miwaafiq yirfaʕ ʕiid-u* whoever agrees, raise his hand! **2** /vt/ to suit, be agreeable to. *ʕixtaar ʕayyⁱ qaṭrⁱ ywafq-ak in-nahar-da* choose whichever train suits you best today. *ma-b-yiʕmil-ʃ illa lli ywafq-u* he only does what he feels like doing. ‖ *ʕil-ḥadd ig-gaay yiwaafiq ʕaʃara maaris* next Sunday is the tenth of March. - vn *muwafqa*; ava *miwaafiq*.

موافقة *muwafqa* /n pl *-aat*/ approval, authorization. *ma-ʕad-ʃⁱ lazim-na muwafqit il-ḥukuuma qablⁱ ma nsaafir* we no longer need government authorization before we can go abroad.

اتوافق ʔitwaafiq /vi/ (impersonal) passive of *waafiq* 1. *ʔil-mawḍuuʕ itwaafiq ʕalee* the matter has been approved. -iva *mitwaafiq*.

توافق *tawaafuq*↑, *tawaafuq*↑ /n/ co-ordination, harmony, congruity, concord. *ʔit-tawaafuq il-ʕaḍali il-ʕaṣabi* muscular-nervous co-ordination.

توافقى *tawaafuqi*↑ /adj */ *[mus]* harmonic. *ʔin-naɣamaat it-tawaafuqiyya* harmonics.

اتّفق ʔittafaq /vi/ to agree, come to an agreement. *ʔittafaqt' maʕa ṣaaḥib il-ʕarabiyya ʕat-taman* I came to an agreement on the price with the owner of the car. ‖*dool mittifqiin maʕa baʕḍ* they are in league together. -vn *ʔittifaaq*; ava *mittifiq*; pva *muttafaq*.

¶ *ḥasab ma yittifiq* haphazardly, irregularly. *bi-nrawwaḥ il-beet ḥasab ma yittifiq* we go home at no fixed time.

اتّفاق ʔittifaaq /n pl *-aat*/ agreement. *tamm il-ittifaaq ʕala xuṭuubit il-bint' li-bnª ʕamm-a-ha* the girl's engagement to her cousin was agreed upon. ‖*ḥallit l-ittifaaq* (the pot of) food which the bride and groom eat together privately on the night of the *duxla* (q.v.).

اتّفاقيّة ʔittifaqiyya /n pl *-aat*/ agreement.

و ف ى

وفى *wafa (i)* /vi/ to act faithfully, be reliable. *wafit-lu l-ʔaaxir laḥẓa* she was faithful to him until the very last. *laazim tiwfi b-waʕd-ak* you must fulfil your promise. -vn *wafa, wafaaʔ*↑; ava *waafi*.

وفاء *wafaaʔ* /n/ loyalty, faithfulness. ‖*wafaaʔ in-niil [obsol]* the inundation of the Nile to a height considered adequate for the fulfilment of agricultural needs.

وافى *waafi* /adj/ abundant, copious, generous. *gism' waafi* large well-built body. *mizaan waafi* full weight and more.

وفى *wafi* /adj */ faithful. *da xill' wafi* there's a faithful friend.

أوفى ʔawfa /el/ **1** more/most faithful. **2** more/most copious, generous or abundant.

وفاة *wafaah* /n pl *wafiyyaat, wafayaat*/ death (usually by natural causes). *daftar il-wafayaat* register of deaths. *ṣafḥit il-wafiyyaat* the obituary page (in a newspaper).

وفّى *waffa* /vt/ **1** to give in full. *waffii-ni ḥaqq-i* give me all my rights. **2** to fulfil, complete. *waffa b-waʕd-u* he kept his promise. *waffa n-nadr* he fulfilled his vow. *waffa muddit is-sign* he served the prison term. -vn *tawfiyya*; ava/pva *miwaffi*.

اتوفّى ʔitwaffa /vi/ to die. *ʔitwaffa l-raḥmit illaah* he passed away to the mercy of God. -ava *mitwaffi*.

متوفّى *mitwaffi, mutawaffi*↑ /n */ deceased.

وافى *waafa* **1** /vt/ to make a delivery to. *ḥa-nwaffii-kum bil-mablaɣ da* we will hand over this sum to you. **2** /vi/ to approximate. *waafa ʕas-sittiin* he nearly reached sixty (years of age). -ava *miwaafi*.

استوفى ʔistawfa /vt/ **1** to fill in (details on a form). *laazim tiftiri ʔistimaara w-tistawfi kull il-bayanaat il-laẓma* you must buy a form and fill in all the necessary information. ‖*ʃawiif l-istiifa* desk sergeant (in the police). **2** to be exhaustive of, be complete in. *ʔakl' mistawfi kull il-ʕanaaṣir il-laẓma* food containing all essential elements. **3** to exact or obtain in full. *ʔistawfa ʔawraaq-u* he obtained all the papers he required. *lamma tistawfi dyuun-ak* when you collect all your debts. -vn *ʔistiifa, ʔistiifaaʔ*↑; ava/pva *mistawfi, mustawfi*↑; pva *mustawfa*↑.

و ق ا ر

وقار *waqaar* /coll n/ sea bass, grouper(s).

وقارة *waqaara* /unit n, pl *-aat*/ a sea bass, a grouper.

و ق ت

وقت *waqt* /n pl *ʔawqaat*/ **1** time, period of time, time span. *ʔin-naṣr' mas ʔalit waqt* victory is a matter of time. *ʔarxaṣ ḥaaga ʕandina l-waqt* the cheapest thing in our view is time. *ma-ʕandinaa-ʃ waqt* we haven't (enough) time. *maʕa l-waqt* in due time. *waqt il-faraaɣ* free time, leisure. **2** point in time, moment. *waqt iṣ-ṣala* time of prayer. *kull' waqt' w-lu ʔadaan [prov]* there is a (different) call for each prayer ≈ times change. *fi-nafs il-waqt* or *fil-waqt' nafs-u* at the same time, simultaneously. *ga f-waqt-u* he came at just the right moment. *ga qabl' waqt-u* he came prematurely. *laqeet il-waqt' mif munaasib* I found it an inconvenient time. *fii ʔawqaat bi-tiigi ʕalayya w-ʔana b-aḥiss' bit-taʕab* there are times when I feel great weariness. -/prepositionally/ *waqt il-ɣaara n-naas bi-tigri lil-maxaabiʔ* when an air raid takes place people run to the shelters.

¶ *ʔawqaat* /adv/ sometimes. *ʔawqaat ... ʔawqaat* at times ... at others. -*waqt-a-ha* /adv/ then, at that time. -*dilwaqti* and *ʔil-waqti* /adv/ now, as in *ʔana lissa gayy' dilwaqti* I came just now, *ʔiʕmil-u dilwaqti* do it immediately!

ميقات *miqaat* /n pl *mawaqiit, mawaqiit*/ **1** appointed time, set time. *mawaqiit iṣ-ṣala* the times of prayer. **2** point, outside the Mecca area, at or before which arriving pilgrims should don the *ʔiḥraam* (q.v.). — *mawaqiit* /pl n/ **3** times of arrival and departure, timetable, schedule.

ميقاتى *miqaati* **1** /adj/ pertaining to timekeeping. *saaʕa*

miqatiyya time-clock. **2** /n pl *-yya/ [obsol]* timekeeper.
وقّت *waqqat* /vt/ to time, schedule. *waqqatna kull[i] taḥarrukat-na fir-riḥla* we timed everything we would (need to) do on the journey. - vn *tawqiit*; ava/pva *miwaqqat*.
توقيت *tawqiit* /n/ timekeeping. *tawqiit ṣeefi* summer time. *tawqiit maḥalli* local time. *tawqiit girinitʃ* Greenwich mean time.
توقيتي *tawqiiti* /adj */ of or pertaining to timing or timekeeping. ‖*saaʕa tawqitiyya* stop-watch.
موقّت *muwaqqat, muʃaqqat↑* /adj/ temporary, short-term. *ruxṣa muwaqqata* temporary licence. *bi-ṣifa* (or *bi-ṣuura) muʃaqqata* temporarily.
¶ *muwaqqatan, muʃaqqatan↑* /adv/ temporarily.
اتوقّت *ʃitwaqqat* /vi/ to be timed, be scheduled. - iva *mitwaqqat*.

و ق ح
وقح *waqiḥ, waqiḥ* /adj * and pl *wuqaḥaaʕ↑*/ impudent, impertinent, insolent. *walad waqiḥ* a rude boy.
وقاحه *waqaaḥa* /n/ impertinence, impudence. *ʃamma-nta waqiḥ waqaaḥa* your rudeness is incredible.
اتواقح *ʃitwaaqiḥ↑* /vi/ to act insolently. *ţuul in-nahaar yitwaaqiḥ ʕala r-raayiḥ wig-gaay* he is being rude to everybody all day long. - ava *mitwaaqiḥ*.

و ق د see also [2] ق ى د
وقود *wuqud, waquud↑* /coll n/ fuel(s). *ʃil-waquud iz-zarri* atomic fuel.
وقيد *waqiid* /n/ wood, straw, dung etc. used as fuel.
وقّاد *waqqaad* /n */ fireman (in a locomotive), stoker.
موقد *mawqad* /n pl *mawaqiid/ [rur]* metal or earthenware brazier used for heating (see Pl.A, 6).
مستوقد *mustawqad* /n/ **1** furnace for heating a public bath. **2** metal frame which holds an *qidra* over the flame.
أوقد *ʃawqad↑* /vt/ to kindle, light (a fire).

و ق ر [1]
وقار *waqaar* /n/ serenity, dignity.
وقور *waquur↑* /adj */ dignified, respectable. *feex waquur* a dignified old man.
موقّر *muwaqqar* /adj */ respectable.

و ق ر [2] see و ق ا ر : *waqaar, waqaara*

و ق ع
وقع *wiqiʕ, waqaʕ (yuqaʕ, yuuqaʕ, yiwqaʕ)* /vi/ **1** to fall, fall down. *ʃiknis iz-zibaala lli wiqʕit min iṣ-ṣafiiḥa* sweep up the garbage that fell out of the rubbish bin. *qabl in-naar ma ţţaffit is-sillim wiqiʕ* before the fire was extinguished the stairs collapsed. *ḥ-awqaʕ min ţuul-i* I am about to collapse. *ʃiţ-ţabaq wiqiʕ minnu* he dropped the plate. *wiqiʕt[i] mis-sama wi-nta stilaqqet-ni* ≈ you are the very person who can help me out. *ʃinta wqiʕt[i] walla l-hawa ramaa-k* ≈ whatever landed you in this mess? *lamma l-baqara tuqaʕ tiktar sakakin-ha [prov]* ≈ people rush to take advantage of anyone in a position of weakness. *ʃilli wiqiʕ yiṣṣallaḥ [prov]* ≈ nothing is so bad it can't be put right. ‖*yimiin-u wiqiʕ* his oath was violated. - *wiqiʕ il-ʃarḍ* to fail, as in *ʃif-feex sarḥaan ḥigaab-u ma-yuqaʕ-ʃ il-ʃarḍ* Sheikh Sirhan's talismans never fail, *ʃana kalaam-i ma-yuqaʕ-ʃ il-ʃarḍ* what I say goes. - *wiqʕit fi-ʕarḍ-u* she threw herself on his mercy. - *misiir-ak tuqaʕ fi-ʃiid il-buliis* one day you will fall into the hands of the police. - *wiqiʕt[i] wala ḥadd[i]-ʃ samma ʕaleek* ≈ you are down and out and no one will help you. - *ma-yuqaʕ ʃilla ʃ-ʃaaţir* (only the clever man falls) ≈ it happens to the best of us. - *wiqiʕt[i] f-maţabb* I got into a sticky situation. - *qalb-a-ha wiqiʕ fi-riglee-ha* she was scared stiff. - *qalb-i wiqiʕ (mig-guuʕ)* I'm starved! - *ʃir-raagil da yuqaʕ waaqif* that's a very resourceful man. - *wiqʕit-lu* she yielded to his advances. **2** to occur, happen. *wiqiʕ il-maqduur* that which was fated took place. *muṣiiba wiqʕit ʕala dmaʏ-na* misfortune befell us. *mumkin il-ḥarb[i] tuqaʕ fi-ʃayy[i] laḥẓa* war could break out at any moment. **3** to mount (of a male animal). *ʃig-gamal wiqiʕ ʕaleeha* the camel mated with her (the female). - vn *waqʕa, wuquuʕ*; ava *waaqiʕ*.

¶ *wiqiʕ fi-* (1) to become embroiled in, become entangled in, as in *ʃin-naas firḥit lamma wqiʕt[i] fil-qaḍiyya* people were glad when I got mixed up in the case, *wiqiʕ fil-ʏalaţ* he made a mistake, *yiʕmiluu-ha ṣ-ṣuʏaar wi-yuqaʕ fiiha k-kubaar [prov]* the young start them (i.e. fights among themselves) but the adults (i.e. the parents) get dragged into them, *wiqiʕ fi-farr[i] ʃaʕmaal-u* ≈ he was hoist by his own petard, *wiqiʕt[i] fik-kalaam* I said more than I intended. (2) to suffer as a result of bad judgement, as in *wiqiʕna fid-duktuur* we were disappointed in the doctor we chose to consult, *wiqiʕt[i] fil-beeʕa* I made a bad business deal. (3) to fight with, as in *ʃir-rukkaab wiqʕu f-baʕḍ* the passengers set about each other.

وقعة *waqʕa* /n pl *-aat/* affair, occurrence. ‖*ya waqʕa sooda* and *ya waqʕit-.. [women]* oh what a terrible thing to happen, as in *ya waqʕit-u* what a terrible thing happened to him! - *waqʕit-ha kaanit ḥilwa* she married well. - *waqʕa zuḥal* (1) a bad deal. (2) a bad business.

واقع *waaqiɛ, waaqiɛ* /n/ reality. *ʕinti laazim tiɛiifi fil-waaqiɛ* you should be more practical. ‖ *ʕil-ʕamr il-waaqiɛ* fait accompli. - *min waaqiɛ* on the basis of, as in *bi-yuḥkumu ɛal-muraʃʃaḥ min waaqiɛ ṣilat-hum il-xuṣuṣiyya bii* they judge the candidate on the basis of their own personal relations with him. - *fil-waaqiɛ* as a matter of fact, as in *ʕil-bint' di gamiila xaaliṣ fil-waaqiɛ* this girl is indeed very pretty.

واقعي *waaqiɛi* /adj */ realistic, real.

واقعيّة *waaqiɛiyya* /n/ realism, reality. *bi-yitṣarraf bi-waaqiɛiyya* he acts realistically.

وقع *waqɛ↑* /n/ effect, impression. *kalam-ha lu waqɛ' gamiil fi-wdaan-i* her words sound impressive to my ears. *ʕil-ɛamla di kaan laha waqɛ' wiḥif ɛand' ʕabuu* this incident had a bad effect on his father.

واقعة *waqɛa↑* /n pl *waqaaʕiɛ*/ **1** accident, event, happening. *leeh ma-ballaɤtuu-ʃ ɛan il-waqɛa saaɛit ma ḥaṣalit* why did you not report the incident when it happened? — *waqaaʕiɛ* /pl n/ **2** facts (of a subject, matter or story). **3** minutes (of a meeting). *laazim tisaggil waqaaʕiɛ ig-galsa* you should write down the minutes of the meeting.

أوقع *ʔawqaɛ* /el/ more/most appropriate.

وقيع *wiqiiɛ* /adj invar/ pertaining to an animal, or the meat of an animal, slaughtered owing to illness or injury and used for food.

وقيعة *waqiiɛa, waqiiɛa↑* /n/ incitement (of people against each other).

موقع *mawqiɛ, mawqiɛ* /n pl *mawaaqiɛ, mawaaqiɛ*/ **1** site, location. *ʕil-muhandis ḥaddid il-mawqiɛ* the architect marked off the (building) site. **2** position, situation. *b-yitkallim min mawqiɛ il-masʕuliyya* he speaks from a position of responsibility.

وقّع *waqqaɛ'* /vt/ **1** to cause to fall. *ḥaasib da-nta ḥa-twaqqaɛ iṣ-ṣuḥuun min ʕiid-i* watch out! you'll make me drop the dishes! ‖ *ʕinta waqqaɛt' qalb-i* you really gave me a fright! - *waqqaɛ yimiin-u* he broke his oath. - *ʕinta ḥa-twaqqaɛ kalaam-i fil-ʕarḍ* will you ignore what I said? - *ʕinta ɛaayiz tiwaqqaɛ-na f-baɛḍ' walla ʕeeh* do you want to set us against each other or what? **2** to mislead, cause to make an error. *ʕana waqqaɛt-a-ha fik-kalaam bil-ʕasʕila btaɛt-i* I tripped her up with my questions. **3** to do (s.th.) forcefully and rapidly. *waqqaɛ id-diḥk* he burst into laughter. *waqqaɛt' fii ḍ-ḍarb* I rained blows on him. — /vi/ **4** to cause enmity, create divisions (between people). *ʕis-sitt il-ɛaqraba di bi-tḥibb' twaṣṣal kalaam wi-twaqqaɛ been in-naas* this malicious woman loves to spread gossip and cause trouble between people. - vn *tawqiiɛ*; ava/pva *miwaqqaɛ*.

وقّع *waqqaɛ²*, *waqqaɛ↑* /vi/ to put a signature. *tismaḥ tiwaqqaɛ hina* would you please sign here? - vn *tawqiiɛ, tawqiiɛ*; ava *miwaqqaɛ, muwaqqiɛ*; pva *miwaqqaɛ, muwaqqaɛ*.

توقيع *tawqiiɛ, tawqiiɛ↑* /n pl *-aat*/ signature. *biṭaaqit it-tawqiiɛ [bank]* card for verifying one's signature.

اتوقّع *ʔitwaqqaɛ* /vi/ **1** to be dropped, be knocked down. ‖ *ʕana b-atwaqqaɛ fi-ɛarḍ-ak* I plead with you. **2** to be misled, be tricked. **3** to be talked into a state of animosity (towards s.o.). — (also *ʔitwaqqaɛ↑*) /vt/ **4** to expect. *ʔitwaqqaɛ ʕaswaʕ l-iḥtimalaat* he feared the worst. **5** *[geog]* to be scaled down (on a map). *yitwaqqaɛ miqyaas waaḥid ɛala ʕalf* it is scaled down to one in a thousand. - ava *mitwaqqaɛ*.

إيقاع *ʔiqaaɛ* /n pl *-aat*/ rhythm. *ɀabṭ il-ʔiqaaɛ* setting the tempo.

إيقاعي *ʔiqaaɛi* /adj/ rhythmic, rhythmical. *ʔil-ʕalaat il-ʔiqaɛiyya* rhythm instruments.

و ق ف

وقف *wiqif (yuqaf, yiwqaf, yuuqaf)* /vi/ **1** to come to a stop, halt, pause. *miʃ qaadir ʕaqaf - ma-ɛandii-ʃ faraamil* I can't stop, I have no brakes. *ʔil-beeɛ wiqif* selling has stopped. *ʔid-damm' wiqif* the bleeding stopped. ‖ *ʔil-ḥaal wiqif* business is bad. - *rigl-i wiqfit xaaliṣ* my leg is numb. - *muxx-i wiqif* I can't think any more. - *ʔil-luqma wiqfit ɛala qalb-i* I have heartburn. - *damm-u waaqif* he's a drag. - *ʔiid-u waqfa* he's a poor worker. **2** to stand, stand up. *min faḍl-ak ma-tuqaf-ʃ* don't stand up, please. *waqfiin hina b-tiɛmilu ʕeeh* what are you standing here for? *zibb-u wiqif [coarse]* his penis became erect. *laazim tuqaf ɛala riglee-k* you must stand on your own two feet. *ʃaɛr' raas-i wiqif* my hair stood on end. ‖ *wiqif ɛala ʔiid...* to stand over, watch constantly, as in *ʔin ma-kan-ʃ il-waaḥid yuqaf ɛala ʔideen il-ɛummaal if-ʃuɤl' ma-yitɛimil-ʃ* if one does not breathe down the workers' necks, the work never gets done. - *ɛal-waaqif* hurriedly, without bothering to sit down, as in *kal ɛal-waaqif* he had a quick snack. - *ʔil-wuquuf fil-ɤariiq* treading water. - *ʔil-wuquuf ɛala l-ʔiid* hand-stand. - *mamnuuɛ il-wuquuf* no parking. - *wiqif mawqif* to adopt an attitude, take a stand, as in *bi-yuqaf mil-ḥayaah mawqif salbi* he has a negative attitude towards life. - vn *wuquuf*; ava *waaqif*.

¶ *wiqif maɛa* to stand up for, support. *wiqif maɛaaya waqt iz-zanqa* he stood by me in a time of need. - *wiqif li-* to be on guard against. *ḥ-aqaf-lu bil-miṣaad* ≈ I shall be on the watch for any mistakes he may make. - *wiqif fi-wiff* to resist (s.o.). *ma-fii-ʃ ḥaaga tuqaf fi-wiff-*

u-hum there's nothing that can stand against them. - *wiqif ḍidd* to resist, stand against. - *wiqif ɛala* to cost (s.o.) (after a business transaction). *ʔil-beet wiqif ɛaleek bi-kaam* how much did the house cost you? *ʔil-beeɛa di tuqaf ɛalayya b-xusaara* this sale represents a loss for me.

وقف *waqaf (yiwqif)* /vt/ **1** to suspend, put a stop to. *miin qal-lak tiwqif if-fuɤl* who told you to stop the work? *ga l-muhandis waqaf-ni ɛan il-ɛamal* the engineer came and suspended me from work. || *ʔintu bass[i] ma-fii-ʃ ḥawaleeku lla waqf il-ḥaal* the only thing you can cause here is trouble. - *ḥukm[i] maɛa waqf[i] t-tanfiiz [leg]* suspended sentence. **2** to endow (property). *zamaan kaan fii naas kitiir tiwqif ʔaraaḍi lil-ʔazhar* in the past many people used to place land in trust for el-Azhar. *ʔil-ḥukuuma laɤit niẓaam il-waqf* the government abolished the *waqf* system. - vn *waqf, waqafaan*; ava *waaqif*; pva *mawquuf*.

وقف *waqf, waqf* /n pl *ʔawqaaf, ʔawqaaf*/ property placed in a religious trust. *wizaarit il-ʔawqaaf* the ministry responsible for (Muslim) charitable endowments (and in the past for property placed in trusts for members of a family). *waqf[i] xayri* endowment for charitable purposes. *waqf[i] ʔahli* endowment for members of a family.

وقفة *waqfa* /n pl *-aat*/ **1** position, stance. *ʔil-ɛaskari k-kuwayyis yibaan min waqfit-u* you can tell a good policeman by his stance. — *ʔil-waqfa* **2** ritual stand on Mt. Arafat during the pilgrimage. **3** (also *yoom il-waqfa*) eve of a feast.

وقفيّة *waqfiyya* /n pl *-aat*/ deed of an endowment.

موقف *mawqif* /n pl *mawaaqif*/ **1** (also *mawqaf*) stopping place, stand. *mawqif it-taksiyaat* taxi rank. **2** (also *mawqif*, pl *mawaaqif*) **2a** position, opinion, attitude. *ʔiza ʔaṣarr[i] waaḥid min it-ṭarafeen ɛala mawqif-u yibqa ma-fii-ʃ ḥall* if one of the parties to the dispute insists on his position, it means there is no solution. **2b** situation. *ʔil-mawqif is-siyaasi tɤayyar* the political situation has changed.

اتوقف *ʔitwaqaf* /vi/ to be suspended, be discontinued. - iva *mitwiqif*.

انوقف *ʔinwaqaf* = *ʔitwaqaf*. - iva *minwiqif*.

وقّف *waqqaf* /vt/ **1** to stop, bring to a halt. *ʔilli yiqdar yiwaqqaf taks[i] ywaqqaf-u* will anyone who can (please) stop a taxi. *laazim tiwaqqaf id-damm* you must stop the bleeding. *rabb-i-na ywaqqaf-lak wilaad il-ḥalaal* ≈ may God send good people to help you. **2** to desist from, discontinue. *ʔana ɛayza ʔawaqqaf il-burʃaam* I want to stop taking the pills. **3** to set up, cause to stand. *ʔis-sitt[i] wiqqit min ṭul-ha w-ʔana waqqaft-a-ha* the woman fell down and I helped her up. *ʔaxiiran qidirt[i] ʔawaqqaf-u ɛala riglee* eventually I got him to stand on his own two feet. || *ʔana waqqaft-u-hum ɛala rigl[i] waḥda* I had them on tenterhooks. **4** to cause to wait. *miʃ ɛaayiz ʔawaqqaf-ak kitiir* I don't want to keep you waiting long. — /vi/ **5** to come to a halt, come to a standstill. *ʔana ḥ-awaqqaf hina wi-ntu tinzilu* I will stop here and you get off. *waqqaf hina ya-sṭa* stop here, driver! - vn *tawqiif*; ava/pva *miwaqqaf*.

اتوقّف *ʔitwaqqaf* /vi/ **1** to depend, be contingent. *ʔiḥna ɛandina t-tarqiyya titwaqqaf ɛala f-fuɤl* promotion for us depends on the (quality of) work. **2** passive of *waqqaf*. - vn *tawaqquf*↑; ava/iva *mitwaqqif, mitwaqqaf*.

أوقف *ʔawqaf*↑, *ʔawqaf* = *waqaf*. - vn *ʔiiqaaf*; ava *muuqif*; pva *muuqaf*.

استوقف *ʔistawqaf, ʔistawqaf* /vt/ to arrest, attract (the attention). *ma-fii-ʃ ḥaaga stawqafit naẓar-ak wi-nta faayit* wasn't there anything that attracted your attention while you were passing? - ava *mistawqaf, mustawqif*.

و ق ق

وقّة، أوقة *wiqqa* /n pl *-aat, wiqaq*/ *[obsol]* oka, unit of weight equal to 1.248 kg.

[1] و ق و ق

see و ا ق: *waaq il-waaq, waaq il-waaq*

[2] و ق و ق

see و ء و ء: *waqwaq*

[1] و ق ى

see also [1] ت ق ى

وقاية *wiqaaya, wiqaaya* /n/ protection, safeguard. *ʔil-wiqaaya ʔaḥsan min il-ɛilaag [prov]* prevention is better than cure.

واقى *waaqi, waaqi* /adj/ protective. *balṭu waaqi mil-maṭar* waterproof coat.

[2] و ق ى

وقيّة، أوقيّة *wiqiyya* /n pl *-aat*/ ounce, unit of weight equal to 37 grams.

و ك ء

see ت ك ى: *takkaaya, ʔittaka, ʔittakka*

و ك ب

موكب *mawkib* /n pl *mawaakib*/ procession, parade.

واكب *waakib*↑ /vt/ to keep up with. *mumkin il-balad tiwaakib surɛit il-ɛilm* it is possible for the country to keep up with the pace of science. - vn *miwakba*; ava *miwaakib*.

و ك ر

وكر *wakr* /n pl *ʃawkaar*/ **1** nest, bird's nest. **2** hideout. *wakr[a] ḥaramiyya* den of thieves.

و ك س

وكس *wakas (i)* /vt/ *[slang]* to thwart (s.o.), cause (s.o.) a setback. - vn *waksa, wakasaan*; ava *waakis*; pva *mawkuus*.

وكسة *waksa* /n pl *-aat*/ *[slang]* misfortune. ‖ *ya-di l-waksa [women]* what a misfortune! - *da waksa* he's a failure.

اتوكس *ʃitwakas* /vi/ *[slang]* to be thwarted. - iva *mitwikis*.

انوكس *ʃinwakas* = *ʃitwakas*. - iva *minwikis*.

و ك ل [1]

وكل *wakal[ʔ] (yakil)* /vt/ to delegate, entrust (to s.o.). *ʃiza kunt[a] ḥa-takil ʃilayya ʃidaarit ʃaɛmaal-ak yibqa laazim tisib-ni ʃaṭṣarraf bi-ḥurriyya* if you are going to charge me with managing your affairs, you must let me act freely. - ava *waakil*; pva *mawkuul*.

وكالة *wikaala* /n/ **1** *[leg]* proxy, power of attorney. *ʃitgawwiz-ha bil-wikaala* he married her by proxy. **2** *[admin]* deputyship. — /pl *-aat*/ **3** agency. *wikaalit ʃanbaaʃ* news agency. ‖ *wikaalit il-balaḥ* scrap metal market in Boulak. **4** /also pl *wakaayil*/ *[obsol]* caravanserai. ‖ *ḥiyya wkaala min ɣeer bawwaab* (is this an inn with no doorkeeper?) you should ask permission before coming in. - *wikaalit ḥimiir [obsol]* a stable where riding animals could be left for a fee.

وكيل *wakiil* /n pl *wukala*/ **1** representative, agent. *kaan wakiil il-ɛaruusa ʃabuu-ha* the bride's proxy was her father. *miin wakiil marsiidis fi-maṣr* who is the Mercedes agent in Cairo? *wakiil in-niyaaba* attorney of the department of public prosecutions. ‖ *wakiil muḥaami* lawyer's clerk. - *ʃallaah wakiil* God is my witness! **2** assistant, vice-. *wakiil wizaara* under-secretary of state. *wakiil il-ɛamiid* or *wakiil ik-kulliyya* assistant dean (in a university).

تكال *tukaal* /n/ dependence. *ɋult il-ḥaqq' wit-tukaal ɛala llaah* I have spoken the truth, and trust in God (to protect me from the consequences). *xalli tukaal-ak ɛalee* depend on Him only.

تواكل *tawaakul* /n/ heedlessness, freedom from care.

وكّل *wakkil*[2], *wakkal* /vt/ to engage, appoint (s.o.) as an agent. *ʃiza rafaɛit ɛaleek ɋaḍiyya laazim tiwakkil muḥaami* if she takes you to court, you should hire a lawyer. - vn *tawkiil*; ava *muwakkil*; pva *muwakkal*.

توكيل *tawkiil* /n pl *-aat*/ **1** agency, franchise. **2** power of attorney. *tawkiil rasmi [leg]* power of attorney which is legalized in the registration office.

موكّل *muwakkil* /n */ *[leg]* client.

اتوكّل *ʃitwakkil*[2] /vi/ **1** to put one's trust (in God), entrust one's fate (to God). ‖ *ʃitwakkil (ɛala llaah)* go! go away! - *ʃana ḥ-atwakkil baɋa* I'm leaving now. - *ʃiɛmil-ha wi-twákkil* (do your duty first and then leave everything to God) ≈ God helps those who help themselves. **2** to be appointed as an agent. **3** *[joc]* to die, pass away. - ava/iva *mitwakkil*.

اتّكل *ʃittakal* /vi/ to put one's trust (in s.o.), entrust one's fate (to s.o.). *ʃittikil ɛala llaah* put your faith in God (also a reply to beggars). *ʃittikil ɛala nafs-ak* be self-reliant. ‖ *ʃilli yittikil ɛaleeku yittikil ɛala llaah* (he who depends on you might as well depend on God) ≈ you are useless. - vn *ʃittikaal*; ava *mittikil*.

و ك ل [2] see ء ك ل: *ʃawkal, wakkil[1], ʃitwakkil[1]*

و ل ا

ولا *wala* /conj/ **1** but not, rather than. *ʃin-naar wala l-ɛaar* (give me) hellfire rather than disgrace. **2** /preceded by neg/ and not, nor. *ʃibn-i miʃ ɛaayiz yaakul wala yifrab* my son will neither eat nor drink. *laa ʃinta ḥabiib-i wala ṣaḥb-i* you're not my sweetheart and not my friend. *ma-fii-ʃ niẓaam wala ḥaaga* there's no organization or anything. — /particle negating the extreme case of something more generally implied/ **3** not even. *ma xadt'-ʃ wala ɋirʃ* I didn't get even a piastre. *wala ḥ-axallii-k tifuuf-u* I won't even let you see him. **4** surpassing even .... *ɛanduhum fis-sudaan ʃaɣaani wala ʃaɣaani ʃumm" kalsuum* in the Sudan they have songs even better than those of Umm Kalthum. *muḥaami wala kull il-muḥamiyya fil-balad* the best of all the lawyers in town.

و ل د

ولد *wilid (i)* **1** /vi/ to give birth. *fii sittaat bi-yiwlidu fil-mustaʃfayaat* some women give birth in hospital. **2** /vt/ to bear (young). *ʃil-quṭṭa wildit talaata* the cat had three (kittens). - vn *wilaada*; ava *waalid*; pva *mawluud*.

ولادة *wilaada* /n/ childbirth, confinement, delivery. *ɋism il-wilaada* the maternity ward. *kaanit wilaada ṭabiɛiyya* it was a normal delivery. *wilaada ɛisra* a difficult delivery.

والد *waalid* /n/ father (in polite usage). *ʃil-xaal waalid [prov]* the maternal uncle is like one's father. ‖ *ya wald-i* affectionate form of address to an elderly man.

¶ *ʃil-waldeen* /dual n/ parents.

والدة *walda*[1] /n pl *walidaat, waldaat*/ mother (in polite usage, cf. *ʕumm*).

مولود *mawluud* /n pl *mawaliid*/ infant, new-born child. *ʕiḫna gayyiin nifuuf il-mawluud* we've come to see the baby. *kull[i] mawluudin walad [prov]* every son of man is (and can be addressed as) a boy ≈ man has no grounds to be proud. ‖*huwwa min mawaliid sanat xamsa w-sittiin* he was born in '65.

ولدة *walda*[2] /n pl *-aat*/ a birth, a delivery. *wildit walda waḫda* she gave birth once.

ولد *wild* /coll n/ offspring. *wild il-ʕamm*↓ paternal cousins. *ya baani f-ɣeer milk-ak ya mrabbi f-ɣeer wild-ak [prov]* (if you build on another's property, you are like one who raises another's children) ≈ you will not profit from your labour. *ʕaʕazz il-wild[i] wild il-wild* the dearest children are the children of one's children. ‖*beet il-wild* uterus.

ولدة *wilda* /n/ **1** brood (of nestlings), litter (of small animals). **2** newly formed fruit or vegetables still under the blossoms. *yadoob il-xiyaara lissa ʈarḫa wilda* the cucumber plant has just formed tiny fruits.

ولداه *wildaah: ya wildaah [women]* poor thing! as in *wi-huwwa maaʃi ya wildaah xabaṭit-u ʕarabiyya* while he was walking along, poor thing, a car hit him.

ولد *walad* /n pl *wilaad, ʕawlaad*/ **1** (also *waad*) boy, male child. - note vocative apocopate form *(ya) walah*. ‖*(ṣuura) walad* jack (in cards). **2** /pl only/ children. ‖*ʕiḫna wlaad in-nahar-da* let's forget the past and turn over a new leaf. - *wilaad balad* (1) compatriots. (2) those who adhere to traditional social values. - *wilaad kaar* enterprising people, go-getters. - *wilaad iṣ-ṣanʕa* colleagues in a trade. - *ʕawlaad iṭ-ṭariiq* followers of Sufi orders. - *kull-i-na wlaad tisʕa [prov]* (we are all born after a nine-month's pregnancy) ≈ we are all equal. - *kull-i-na wlaad ʕaadam (wi-ḫawwa)* ≈ we are all equal. - *ya wlaad* everyone (nonspecific form of address), as in *ʕeeh il-balwa di ya wlaad* what is this disaster, I ask you!

ولّود *walluud*↓ /adj */ *[slang]* clever, sharp.

ولاده *wallaada* /fem adj/ bearing many children. ‖*ma-gabit-ak-ʃ[i] wallaada*↓ *[women]* you are so damn clever!

مولد *mawlad* /n/ **1** /no pl/ biography of the Prophet Muhammad, read as an act of piety. *fi-ʕaaxir il-leel if-ʃeex yiqra l-mawlad wi-ɣixtim* at the end of the night the sheikh reads out the biography of the Prophet and then concludes. — /pl *mawaalid*/ **2** celebration held in the home, a central feature of which is the reading of the biography of the Prophet. *lamma l-waad yiṭiib laazim tiʕmilu mawlad wi-twakkilu l-ɣalaaba* when the boy recovers from his illness you should hold a celebration in honour of the Prophet and feed the poor.

مولد *muulid, mawlid*↑ /n pl *mawaalid*/ **1** popular religious festival on the anniversary of a venerated religious figure, usually held in the locality with which he, or she, is closely associated. *ʕil-muulid* or *muulid in-nabi* or *ʕil-mawlid in-nabawi* the Prophet Muhammad's birthday. **2** uproar, chaotic situation. *ma-fii-ʃ niẓaam ya ʕamm[i] da muulid* there's no organization, my good man, it's complete chaos! ‖*nifuuf ʕaaxir il-muulid* we'll see this mess through to the end. - *muulid wi-ṣaḫb-u ɣaayib* a free-for-all.

موالدى *mawaldi* /n pl *-yya*/ man whose protession it is to read or chant the *mawlad* and other texts in praise of the Prophet. ‖*ʕir-raagil da ʕaamil zayy il-mawaldiyya* ≈ that man is a scavenger.

ميلاد *milaad* /n/ birth. *ʃahaadit il-milaad* birth certificate. *ʕiid milaad* birthday. ‖*ʕiid il-milaad* Christmas.

ميلادى *milaadi* /adj */ pertaining to the birth of Christ. *ʕit-tariix il-milaadi* the Christian calendar. *ʕis-sana l-miladiyya* the year A.D.

اتولد *ʕitwalad* /vi/ to be born. - ava *mitwilid*.

ولّد *wallid* /vt/ **1** to assist in birth, deliver. *ʕidduu-ni bing[i] w-walliduu-ni bil-ʕidda* they gave me an anaesthetic and carried out the delivery with forceps. ‖*wallidu l-baɣla* ≈ they did the impossible. **2** to generate. *tawliid ik-kahraba* generating of electricity. *ʕiḍ-ḍaɣṭ[i] ywallid l-infigaar* (too much) pressure causes an explosion. **3** to compose. *yismaʕ illi b-yitqaal wi-ywallid minnu ḫkaaya* he listens to what is said around then creates a story out of it. - vn *tawliid*; ava *miwallid, muwallid*↑; pva *miwallid, muwallad*↑.

مولّد *muwallid* /n pl *-aat*/ generator. *muwallid kahrabaaʕi* electrical generator.

مولّده *muwallida* /n pl *-aat*/ midwife.

مولّد *miwallad, muwallad* /adj */ clever, sharp-witted, crafty.

اتولّد *ʕitwallid* /vi/ to be or become generated. - ava/iva *mitwallid*.

اتوالد *ʕitwaalid* /vi/ to reproduce, multiply. - vn *tawaalud*↑; ava *mitwaalid*.

و ل س

ولس *wils* /n/ covering up (e.g., people's faults). *law in-naas tixla mil-wils[i] yoom waaḫid kunna ningaḫ* if people would rid themselves of duplicity for one single day, we should succeed.

ولّس *wallis = waalis*. - vn *tawliis*; ava *miwallis*.

والس *waalis* /vi/ to plot together, conspire. *ʕir-riff[i]*

waalis maʕaahum the referee was prejudiced in their favour. - vn *mıwalsa*; ava *miwaalis*.
موالس *muwaalis* /n */ accomplice.

و ل ع
ولع *wiliʕ (a)* /vi/ **1** to catch (of fire), catch fire. *ʃin-naar wilʕit fi-hduum-u* his clothes caught fire. ‖ *ʃakal-ha walʕa* to snap up an opportunity. **2** to come on (of light, radio etc.). *ʃin-nuur wiliʕ fil-ʃooḍa* the light came on in the room. *sibna t-tilivizyuun waaliʕ* we left the television on. - ava *waaliʕ*.
ولعة *wilʕa* /n pl *-aat/* **1** camp-fire, open fire. *ʃil-ʕummaal qaʕdiin ḥawaleen il-wilʕa* the workmen are sitting around their fire. **2** ember, something burning, something alight. *wilʕa wiqʕit mın ʃid-ha ḥaraqit ıs-siggaada* she dropped a coal and it burned the carpet. **3**↓ light (for a fire, cigarette etc.). *haat wilʕa lis-sigaara* give (me) a light for my cigarette! — /adj invar/ **4** *[slang]* smart, on-the-ball (of a person). *walad wilʕa w-ginn* a clever go-getter.
ولاعة *wallaaʕa* /n pl *-aat/* cigarette lighter, gas lighter.
ولّع *wallaʕ* /vt/ **1** to light, kindle, set fire to. *bi-twallaʕ il-babuur* she lights the paraffin stove. ‖ *wallaʕ ṣawabʕ-u l-ʕaʃara* to do one's best. **2** to switch on, turn on. *wallaʕit in-nuur* she turned on the light. *wallaʕ it-tilıvizyuun* turn the television on! — /vi/ **3** to make a fire, kindle a flame. *wallaʕtᵃ ʕal-ʃakl min saaʕa* I put the food on to cook an hour ago. *wallaʕ fi-nafs-(u)* to commit, or attempt to commit, suicide by burning oneself to death. **4** to catch fire. *ʃik-kabrıt da ma-biywallaʕ-ʃ* these matches don't strike. ‖ *ʃafayf-i wallaʕit min if-faṭṭa* my lips are burning because of the chilis. - *ḥa-ywallaʕ min l-ɣıira* he's burning with jealousy. - *ʃıg-gaww' mwallaʕ (naar)* the weather is scorching hot. - *kullᵃ ḥaaga mwallaʕa l-yomeen dool* everything is so expensive these days. **5** to come on (of light, radio etc.). *ʃil-ḥamdu lı-llaah in-nuur wallaʕ* thank God, the light came on. **6** *[slang]* to take to one's heels. *ʃil-ḥaraamı wallaʕ* the thief ran away. - vn *tawliiʕ*; iva *mıtwallaʕ*.

اتولّع *ʃitwallaʕ* /vi/ **1** to be set alight. **2** to be switched on (of light, radio etc.). - iva *mitwallaʕ*.

و ل ف ¹ see also ء ل ف ¹ and ل و ف ⁴
وليف *waliif* /n */ **1** sweetheart, lover. *kull' waliif wi-walift-u* each one has his own lover. **2** mate (of birds and monogamous animals). *ʃil-ʕaṣfuur maat ḥuznᵃ ʕala walift-u* the bird died of sorrow over the loss of his mate.

ولّف *wallif* /vt/ **1** to blend, mix. **2** to accustom (s.o. to s.th.). *ʃil-ḥubb' wallif-hum ʕala baʕḍ* love brought them together. — /vi/ **3** to become accustomed (to s.o. or s.th.), become affectionately familiar (with s.o. or s.th.). *ʃilli min ʕayyina waḥda bi-ywallifu ʕala baʕḍ* ≈ birds of a feather flock together. *dool miwallifiin ʕala baʕḍ* (1) they're used to each other. (2) they're in love with each other. **4** to mate (of animals). *ʃil-ḥamaama wallifit ʕala dakar ʃiswid* the hen pigeon took a black cock bird as a mate. - vn *tawliif*; ava *miwallif*.
توليفة *tawliifa* /n/ a blend. *tawliifit duxxaan* a blend of tobaccos. *tawliifit ʕalaf* livestock food mixture.
اتولّف *ʃitwallif* /vi/ **1** = *wallif* 3 and 4. **2** passive of *wallif* 1 and 2. - ava/iva *mitwallif*.

² و ل ف
ولف *wulf* <Engl *wolf*>: *kalb' wulf* Alsatian dog.

و ل ل ا
ولاّ *wallaˈ* /conj/ **1** or. *taaxud baṭaaṭis walla ṭuuṭa* will you take potatoes or tomatoes? *ma-fii-ʃ taksiyyaat walla ʃeeh* are there no taxis or what? **2** /after an oath/ may I be ... (if I am lying). *wi-ḥyaat in-naar di walla-tḥiriq biiha ʃinnu huwwa lli xad-ha* he is the one who took it, and may I be burnt by this fire (if I am lying)!

¹ و ل ه
ولهان *walhaan* /adj */ passionately in love.
وله *walahˈ* /n/ passionate love.

² و ل ه see also و ل د
وله *walah²* abbreviated form of *walad*, occurring particularly as a form of address.

و ل و ل
ولول *walwil* /vi/ to wail in lamentation (of women). *ʃis-sittaat kaanu bi-ywalwilu wara l-mayyit* the women were following the dead man and wailing. - vn *walwala*; ava *miwalwil*.

و ل ى
ولاية *wilaaya* /n/ **1** guardianship, custody. *ʃil-ʃumm' laha wlaaya ʕala ʃawlad-ha baʕd' ʃabuu-hum* the mother has the legal custody of her children after their father. **2** qualities common to a *wali* (q.v.). *ẓaharit ʕalee ʕalamaat il-wilaaya* the signs of his being a *wali* were manifested. **3** succession to the throne. — /pl *-aat/* **4** state. *ʃil-wilayaat il-muttaḥida* the United States.
ولي *wali* /n pl *ʃawliya, ʃawliyya*↓/ man noted for his

piety and religious mien, saint. *yiruuḥu maṣr[i] yzuuru l-ʕawliya* they go to Cairo to visit (the shrines of) the saints.

أولى *ʕawla* /el/ more/most entitled, more/most deserving. *ʕiḥna ʕawla bii* we are more entitled to it, *ʕiḥna ʕawla nikkallim* we have a better right to speak.

أولويّة *ʕawlawiyya* /n pl *-aat*/ priority.

ولِيّ *waliyy* /n pl *ʕawliyaaʕ*/ **1** (also *waliyy[i] ʕamr*) legal guardian. *naaẓir il-madrasa ɛayz-ak tigiib waliyy[i] ʕamr-ak* the school principal wants you to bring along your guardian. **2** successor, heir. *waliyy[a] ɛahd* heir apparent, crown prince. ‖ *waliyy in-niɛam [obsol]* title of the Khedive of Egypt.

وليّة *wiliyya* /n pl *walaaya*/ **1** woman (generally of the lower classes). ‖ *balaaʃ maʃaakil maɛaaha - di wliyya* stop troubling her - she's just a helpless woman! **2** /pl only/ dependant females. *ʕir-raagil da ɛandu walaaya* that man has (many) female dependants.

مولى *mawla* /n pl *mawaali*/ **1** lord, master. *ya mawlaana* term of address or reference to an older Muslim religious man specifically a teacher at el-Azhar. **2** *ʕil-mawla* the Lord (epithet of God). *ʕilli yustur-u l-mawla ma-yifḍaḥ-uu-ʃ il-ɛabd [prov]* ≈ with God's protection one is invulnerable. *ya-mawlaa-ya kama xalaqt-i-ni* ≈ as naked as the day that I was born (i.e. penniless).

ولّى *walla[2]* /vt/ **1** to put (s.o.) in charge, grant custody to (s.o.). *miin wallaa-k ʕamr-i* who appointed you as my custodian? **2** to turn (s.th.) towards (s.o.). *wallit-u ḍahr-a-ha* she turned her back on him. — /vi/ **3** to flee. *zaman if-ʃabaab walla* the days of youth are gone. *saaɛit ma ʃaf-ni walla* as soon as he saw me he ran away. - vn *tawliya, tawliyya*; ava/pva *miwalli*.

اتولّى *ʕitwalla* /vt/ **1** to be in charge of. *ʕis-sifaara b-titwalla maṣaaliḥ raɛayaa-ha fil-xaarig* the embassy is in charge of its citizens' interests abroad. *rabb-i-na yitwallaa-na b-raḥmit-u* may God protect us with his mercy! **2** to be put in charge. - ava/iva *mitwalli*.

والى *waala* /vt/ to apply oneself continuously or repeatedly to. *niwaali n-nigiil ʕusbuuɛ bil-mayya* we water the grass continuously for a week. ‖ *ɣird[i] mwaali wala ɣazaal ʃaarid [prov]* (a baboon that is near is better than a gazelle that is far away) ≈ familiarity is more endearing than beauty. - vn *miwaliyya*; ava/pva *miwaali*.

اتوالى *ʕitwaala* /vi/ passive of *waala*. - iva *mitwaali*.

استولى *ʕistawla* /vi/ **1** to take possession. *ʕistawlu ɛass-sulṭa* they seized power. ‖ *ʕistawla ɛala ɛaql-a-ha* he controlled all her thinking. - *ʕistawlit ɛala qalb-i* she stole my heart. **2** to pretend to be or act as a *wali*. - vn *ʕistiila, ʕistiwla*; ava *mistawli*.

و م ء see و م ى

و م س

مومس *muumis* /fem n, pl *-aat*/ prostitute, harlot, whore.

و م ى

ومى، وماً *wama* /n/ hint, slight indication. *ʕiḥna b-nifham bil-wama* just a nod is enough explanation for us.

و ن ج

ونج *wing* <Engl> /n/ *[sport]* **1** wing. **2** /pl *-aat, wunúga*/ winger.

و ن س see also ء ن س [1]

ونس *wanas* **1** /adj invar/ lively, abounding in social activity (of a place). *balaaʃ tiskunu fil-maɛaadi - ʕid-duqqi wanas ʕaktar* don't live in Ma'adi; Dokki is more lively. **2** /n/ company, companionship. *xadt-a-ha maɛaaya wanas* I took her with me for company. *b-aqɛud ɛanduku l-agl il-wanas* I come and spend time at your place (just) for the sake of company.

ونيس *waniis* /n invar and fem *waniisa*/ companionable person. *bint-i kaanit ʕaḥsan waniis* (or *waniisa*) *liyya fir-riḥla* my daughter kept me company on the trip better than anyone else.

ونّاسة *wannaasa* /n pl *-aat*/ night-light. - also *nawwaasa*.

ونّس *wannis* /vt/ to keep company with, while away time in the company of (s.o.). *qaɛadit maɛaaya twannis-ni l-ɣaayit gooz-i ma ga* she sat with me to keep me company until my husband arrived. - vn *tawniis*; ava/pva *miwannis*.

اتونّس *ʕitwannis* /vi/ passive of *wannis*. - iva *mitwannis*.

و ن ش

ونش *winʃ* <Engl> /n pl *ʕawnaaʃ, winʃaat*/ winch, crane. *mara zayy il-winʃ* a big fat woman.

ونّاش *wannaaʃ* /n * and pl *wannaaʃa*/ crane operator.

و ن ن

ون *wann (i)* /vi/ **1** to hum or whir (of revolving objects). *ʕin-naḥla nizlit tiwinn* the top came down whirring. **2** /usu w neg/ to slow down. *da-na ma-b-awinn[i]-ʃ ṭuul in-nahaar* I never slacken up all day long. *ruuḥi ʕindahii-lu wi-wɛi twinni* go and call him and don't waste time. - vn *wann*; ava *waanin*.

ونّن *wannin* /vi/ *[slang]* to get drunk. - vn *tawniin*; ava *miwannin*.

ون و ن
ونون *wanwın* /vi/ to wail, groan. *mif ḥa-taxud-ha lamma twanwın* you won't take it even if you moan (all day about it). - vn *wanwana*; ava *miwanwin*.

و ه ب
وهب *wahab (i)* /vt/ to grant, bestow, give (s.th.) free. *wahabt' nafs-i l-xidmıt ıl-ʕıxwaan* I have devoted myself to the service of friends. *ʕabuu-ya wahab-ni lil-ʕazhar* my father dedicated me to (studying at) el-Azhar. *wahabit-u nafs-a-ha* she gave herself to him. *rabb-ı-na wahab-u z-zakaaʕ wıl-maal wil-wilaad* God blessed him with intelligence, money and children. *ʕil-muɛgizaat ıllı rabb-i-na wahab-ha l-sayyid-na muusa* the miracles the Lord granted Moses to perform. - vn *wahba, hıba, wahb*; ava *waahıb*; pva *mawhuub*.
وهبة *wahba↓* /n pl *-aat*/ **1** tip, gratuity. **2** gift, present.
هبه *hiba* /n pl *-aat*/ donation, gift. ‖*hibit il-manɕuul* percentage paid to the government on transfer of property.
موهوب *mawhuub* /adj */ gifted, talented.
وهّابي *wahhaabi* /adj */ Wahhabite.
الوهّابيّة *ʕil-wahhabıyya* /n/ Wahhabism.
موهبه *mawhiba* /n pl *mawaahib*/ talent, gift, natural ability.
اتوهب *ʕıtwahab* /vi/ to be granted, be bestowed, be given free. - iva *mitwıhıb*.

و ه ج [1]
وهج *wahag' (ı)* /vt/ to confuse, fluster. - vn *wahagaan, wahga*; ava *waahig*; pva *mawhuug*.
اتوهج *ʕitwahag* /vi/ to be or become confused or flustered. - ava/iva *mitwihig*.
انوهج *ʕinwahag* = *ʕitwahag*. - ava/iva *minwihig*.

و ه ج [2]
وهج *wahag²* /n/ glare, glow.
اتوهّج *ʕıtwahhag* /vi/ to glow, flame, glare. - vn *tawahhug*; ava *mitwahhig*.

و ه ر
وهر *wahar (i)* /vt/ to frighten, alarm. *ʕir-raagil min wahrit-u zaqq il-waad kaan ḥa-ywaqqaɛ-u* the man in his fright pushed the boy and nearly knocked him down. - vn *wahar, wahra, waharaan*; ava *waahir*; pva *mawhuur*.
اتوهر *ʕıtwahar* /vi/ to be or become frightened or alarmed. - ava/iva *mıtwihir*.
انوهر *ʕınwahar* = *ʕıtwahar*. - ava/iva *mınwihir*.

و ه ل
وهلة *wahla↑: min ʕawwil wahla* at first sight.

و ه م
وهم *waham (i)* /vi/ **1** to delude, deceive, dupe. *huwwa b-yiwhim in-naas bi-ʕinnu b-yiɛraf kull[a] ḥaaga* he makes people believe that he knows everything. **2** to worry, alarm, scare. *kalaam id-duktuur waham-ni* what the doctor said worried me. *waaqif fiq-qalma ɛafaan yiwhim il-walad* he is standing in the dark to give the child a fright. - vn *wahm*; ava *waahim*; pva *mawhuum*.
وهم *wahm* /n pl *ʕawhaam*/ **1** unreality, illusion. *ɛaalam il-wahm* the world of fantasy. *geeti tṣaḥḥii-ni min noom-i ɛalafaan il-wahm' da lli f-ɛaql-ik* did you come to wake me from my sleep because of this fantasy in your mind? **2** hypochondria. *ɛandu wahm' gaamid* he is a hypochondriac.
وهمي *wahmi* /adj/ fictitious, false. *ẓahar ʕinn il-ɛinwaan illi ʕidda-huu-ni wahmi* it turned out that the address he gave me was a false one.
وهمجي *wahmagi* /n pl *-yya*/ **1** superstitious person. **2** hypochondriac.
اتوهم *ʕitwaham* /vi/ **1** to be deluded, be deceived, be duped. **2** to be or become worried, be alarmed, be scared. - ava/iva *mitwihim*.
اتوهّم *ʕitwahham* /vi/ to suffer delusions, imagine things. - ava *mitwahham*.

و ه و ج
وهوج *wahwıg* /vi/ to burn violently. *ʕin-naar wahwigit* the fire rose high. *buqq-i wahwıg mif-faṭṭa* my mouth is burning from the chilis. ‖*ɛaql-u mwahwig* he is bright. - vn *wahwaga*; ava *miwahwig*.
اتوهوج *ʕitwahwig* = *wahwig*. - ava *mitwahwig*.

و ه و ه
وهوه *wahwah* /vi/ to moan or groan with pain. - vn *wahwaha*; ava *miwahwah*.

و ي ب
ويبه *weeba* <Copt> /n pl *-aat*/ *[obsol]* measure equal to one-sixth of an ardeb. ‖*filuus bil-weeba* lots of money. - *xeeba bil-weeba* a gross failure.

و ي ز ي
ويزي *wiizi* /n/ pound note (in the jargon of those who practise the three-card trick).

(و ى ك)

ويكه *weeka* <perh Copt> /n/ dish of okra cooked with water and butter to a soupy consistency.

ويكة *wiika* /adj invar/ *[slang]* cheeky, playful. *banaat wiika* coquettish girls. *ʔinta ya wiika ya btaaʕ il-bulitiika* ≈ you cheeky devil!

و ى ل

ويل *weel* /n/ agony. *goz-ha warraa-ha l-weel fa-ṭalabit iṭ-ṭalaaq* her husband made her life a misery so she asked for a divorce. *ya-weel ...* woe is ..., as in *ya weel-i* woe is me. ‖*ya weel-ak* (1) tough luck! (2) I'll give you a rough time! - *ya-weel-u ya-sawaad leel-u* he is in for a terrible time.

و ى م

ويم *wayam* /n/ approximation. *xadt il-maqaas bil-wayam* I took an approximate measurement.

وايم *waayim* /vt/ to approximate, estimate. *niwaayim ʕaff iʃ-ʃaqqa l-ʔawwil wi-baʕdeen niʕmil il-mazaad* we first estimate (the value of) the furniture in the flat and then hold the auction. -vn *miwayma*; ava/pva *miwaayim*.

موايمة *miwayma* /n/ approximation. *bil-miwayma* approximately. ‖*da ʕaayiʃ bil-miwayma* he leads a happy-go-lucky kind of life.

و ى ا

ويّا *wayya* /prep, w pron suff *wayyaa-*, 1st pers sing *wayyaaya*/ with, together with, accompanying. *miin wayyaak* who is with you? ‖*wayyaak wayyaak ʕaleek ʕaleek* (he) follows others without examining the situation (of one who has no mind of his own).

ي

(ى ا)

يا *ya'* **1** vocative particle. *ya mḥammad* Muhammad! *ya sitt* Madam! *ya-bn-i* my boy! *ya-bn il-ʕeeh* you son of a so-and-so. **2** particle of self-apostrophization. *ʕiḥna ya maṣriyyiin* we Egyptians. *ɛayzin-ni ʕana ya ɤariib ʕafassaḥ-u* you want me, a complete stranger, to show him around? **3** exclamatory particle. *ya gamaal-ik* how beautiful you are! ‖ *(ʕaah) ya-ana* or *y-aani* exclamation of distress or pain ≈ o me o my! as in *y-aani mil-ḥubb* poor me, when it comes to love! - *y-aadi, y-adi* /w foll n without agreement/ what a ...! as in *y-adi n-nahaar il-ʕiswid* what an awful day! *y-aadi n-nuur* expression of welcome ≈ what a light (which illuminates our house)! Look up *ya ʕimma, ya baay, ya tara, ya reet* and *ya huuh* under *ʕimma, baay, raʕa, reet* and *huuh* respectively. for *yadoob* see ب و د ى ; for *yalla* see ا ل ل ى .

يا *ya²* <P *ya*> /correl conj/ either ... or. *ya tuqɛud ya timfi laakin ma-tuqaf-ʃ' kida* either sit down or go, but don't just stand there like that. *huwwa ya qadd-ak ya bil-kitiir ʕakbar minnak bi-sana* he's either your age or, at the most, a year older. ‖ *ya ʕana ya ʕinta n-nahar-da* I'll show you here and now!

يا *yaa* /fem n, pl *yahaat*/ twenty-eighth and last letter of the Arabic alphabet. - also *yaaʕ, yih, yeeh*.

ى ا ء

ياء *yaaʕ* /fem n, pl *-aat*/ twenty-eighth and last letter of the Arabic alphabet. *min il-ʕalif ʕila l-yaaʕ* from A to Z. - also *yaa, yih, yeeh*.

ى ا ب

ياب *yaab* <prop n *Yapp*>: *tagliid yaab* kind of book-binding in limp leather with decorated edges.

ى ا ق

ياقة *yaaqa* <T *yaka*> /n pl *-aat*/ collar (of a garment). *nuṣṣ' yaaqa* mandarin collar, half collar. - also *liyaaqa*.

ى ا م

ياما *yaama* /exclam part/ how! how often! how much! how many! *yaama naṣaḥt-ak* how often have I advised you! *yaama-na ḥaznaan* how sad I am! *yaama b-titɛab ɛaʃanna* how much trouble you go to for us! *yaama fii fuqara* how many poor there are! *yaama fil-ḥabs' mazaliim [prov]* how many are those who are wrongly imprisoned! ‖ *ʕilli yɛiilʃ yaama yʃuuf [prov]* ≈ the longer you live the more you see. - *yaama tʃuuf* or *yaama bukra tʃuuf* ≈ that's the least of it, that's nothing to what you'll see later. - *yaama hina yaama hnaak* (1) everywhere, all over, as in *ʕil-muʃkila di miʃ fi-maṣr' bass - yaama hina yaama hnaak* this problem is not restricted to Egypt - it's the same story everywhere. (2) well-off, as in *ʕiftakart innu yaama hina yaama hnaak wi-ʕatabii mifallis* I thought he was well-off, but it turns out he's broke (cf *la hina wala hnaak*).

ى ا ن ا see ى ا : *ya-ana*

– ى ا ن ص see ى ن ص ى ب : *yaanaṣiib*

ى ا ن ى see ى ا : *y-aani*

ى ا ه

ياه *yaah* /interj/ exclamation of surprise ≈ well I never! my! *yaah da-ḥna tʃaxxarna qawi* my! we really are late!

ى ا و ر

يارو *yaawir* <T *yaver*> /n pl *-aat*/ aide-de-camp.

ياوران *yawraan: kibiir il-yawraa·ı* chief of protocol.

ى ا ى

ياى *yaay* <T *yay*> /n pl *-aat*/ small coil or spring.

ي ء س
يئس *yiʔis (a)* /vi/ to despair. *yiʔist^{i} minnu* I despaired of him. *mayʔuus min* hopeless, as in *ʔil-ɣabaawa maraq mayʔuus min fifaa* stupidity is a disease for which there is no hope of a cure. - vn *yaʔs*; ava *yaaʔis*; pva *mayʔuus*.
يأس *yaʔs* /n/ despair. ‖*sinn il-yaʔs* menopause.
يأسان *yaʔsaan* /adj */ despairing, in despair.
اتيأس *ʔityaʔas* /vi/ (impersonal) passive of *yiʔis*. *riḍa rabb-i-na ma-yityiʔis-f^{i} minnu* God's salvation is not to be despaired of. - iva *mityiʔis*.
يأّس *yaʔʔis* /vt/ to make (s.o.) despair. *ma-fii-f ʔabadan ḥaaga tyaʔʔis-ni min raḥmit illaah* nothing would make me despair of God's grace. - vn *tayʔiis*; iva *miyaʔʔis*.
اتيأّس *ʔityaʔʔis* /vi/ passive of *yaʔʔis*. - iva *mityaʔʔis*.
يائس *yaaʔis* /vi/ to take a chance in desperation, take a risk as a last resort. *yaʔist^{i} w-ṭaffeet in-naar bi-ʔiid-i* I risked it and put out the fire with my hand. - vn *miyaʔsa*; ava *miyaaʔis*.

ي ء م ا see ء م م: *ya ʔimma, ya ʔimman, ya ʔimmatan*

ي ب ا ن
اليابان *ʔil-yabaan* /prop n/ Japan.
يابانى *yabaani* **1** /adj */ Japanese. **2** /n */ a Japanese. **3** /n, no pl/ the Japanese language.

ي ب ا ى see ب ا ى: *ya baay*

ي ب ر see ء ب ر^{1}: *meebar*

ي ب س
يبس *yibis (a)* /vi/ to get dry or stiff in consistency. *ʔil-ɛagiin yibis ɛal-xabiiz* the dough has become too stiff to bake well. - vn *yabasaan, yibuusa, yubuusa*.
يبوسة *yibuusa, yubuusa* /n/ dryness, stiffness.
يبسان *yabsaan* /adj */ = *yaabis*.
يابس *yaabis* /adj/ dry. *ɛagiina yabsa* stiff dough.
يبّس *yabbis* /vt/ to dry and stiffen in consistency. *ʔil-ḥaraara wil-hawa yabbisu wiff il-ɛagiina* heat and air dried the surface of the dough. - vn *taybiis*; ava/pva *miyabbis*.
اتيبّس *ʔityabbis* /vi/ to be or become dried and stiffened in consistency. *ʔil-ɛagiina di ṭariyya zyaada laazim tityabbis bi-fwayyit diqiiq* this dough is too wet, it should be stiffened with some flour. - vn *tayabbus*$^{\uparrow}$; ava/iva *mityabbis*.

ي ب ل see ي ب ي ل: *yubiil*

ي ب ا ن see ي ب ا ن: *ʔil-yabaan, yabaani*

ي ب ي ل
يوبيل *yubiil* <Heb> /n/ jubilee. *ʔil-yubiil il-faḍḍi* silver jubilee.

ي ت ر ا see ر ء ى: *ya tara*

ي ت م^{1}
يتيم *yitiim, yatiim* /n pl *yutama, ʔaytaam, yataama*/ **1** /adj/ **1a** deprived by death of a parent. *yitiim il-ʔabb^{i} wil-ʔumm* parentless. **1b** sole, only. *ʔil-madrasa l-yitiima f-balad-na* the only school in our village. ‖*ʔig-gumɛa l-yatiima* last Friday in Ramadan. **2** /n/ fatherless child. *ɛaʃa l-yataama ɛaleek ya rabb [women beggars]* the fatherless children's supper depends on you, O Lord!
يتّم *yattim* /vt/ to orphan, render an orphan. *ʔil-ḥadsa yattimit-ha* the accident made her an orphan. - vn *taytiim*; ava *miyattim*.
اتيتّم *ʔityattim* /vi/ to be orphaned. *ʔil-ɛiyaal ityattimu - ma-lhum-f^{i} ɣeer rabb-i-na* the children have been orphaned - they have no one but God. - iva *mityattim*.

ي ت م^{2}
ميتم، مأتم *maytam* /n pl *mayaatim*/ gathering for, or place of, paying condolences during the three days immediately following a death.

ي ث ر ب see ي س ر ب

ي ج ب see و ج ب: *yagib*

ي ج و ج
يجوج *yaguug: (ɛamliin) zayy^{i} yaguug wi-maguug* (they are behaving) in a very rowdy way.

ي خ ت
يخت *yaxt* <Engl> /n pl *yuxuut, yuxúta*/ yacht. *naadi l-yaxt* yacht club.

ي خ ن ى
يخنى *yaxni* <P *yakhnî*> /n/ baked meat or fish dish with onion and tomato. ‖*xalla l-ḥikaaya yaxni* he made a mess of the affair.

ي د
يد *yad*$^{\uparrow}$ /fem n, pl *ʔaydi*/ hand. *bi-yad-i la bi-yadi ɛamr [prov]* I'd rather do it myself (unpleasant as it is) than have someone do it for me.

يدوى *yadawi* /adj/ pertaining to the hand, manual. *munfaar yadawi* handsaw. *gamɛ' yadawi* manual typesetting. see further under ى د د and ء ى د

ى د د see also ء ى د and ى د
يدّ *yadd* /fem n, pl *ʕayaadi*/ **1** hand (especially in abstract senses). *maɛmuul bil-yadd* (or *bil-ʕiid*) handmade. ‖*ɛala yadd* (or *ɛala ʕiid*) (1) in the presence of. (2) under the supervision of. - *ɛan yadd* under the hand of, as in *maktuub ɛan yadd' waaḥid muḥaami* written under the hand of a lawyer. - *kull-u b-yadd illaah* it's all in God's hands. - *rabb-i-na yaaxud bi-yadd-ak* God help you! God grant you success! - *ma-bil-yadd' ḥiila* there's nothing I can do, I'm powerless to act. - *waqɛ il-yadd* (1) *[leg]* squatter's rights. (2) *[Chr]* laying on of hands. - *kull-u-hum yadd' waḥda* they act as one man, they're united. **2** grip, handle. *yadd' musaddas* a revolver butt.

ى د د و
يدّو *yaddu* /n/ style of serving in the game *xara* (q.v.).

ى د و see ى د : *yadawi*

ى د و ب
يادوب *yadoob* /adv/ barely, (only) just, hardly. *ʕiḥna yadoob ɛarfiin niɛiif* we are barely able to survive. *ʕana yadoob waaxid nafas-i* I have barely caught my breath. *ʕana yadoob ma-xadt'-ʃ nafas-i* (1) I'm just on the point of catching my breath. (2) I've just this very second caught my breath. *ʕana yadoob sinn-i sitta w-ɛiʃriin* I'm barely twenty-six years old.
يادوبك *yadoobak* = *yadoob*.

ى ر د
يردة *yarda, yarda* <Engl> /n pl *-aat, -aat*/ yard (measurement).

(ى ر ق)
يرقة *yaraqa, yaraqa* /n pl *-aat*/ larva.
يرقان *yaraqaan, yaraqaan*↑ /n/ jaundice.

ى ر ن ى
يرنى *yarni* /adv/ *[slang]* in cash. *ɛaawiz filuus-u yarni* he wants his money in cash.

ى ر ى ت see ر ى ت : *ya reet*

ى ز ب ا -
يوزباسى *yuzbaafi* <T·*yüzbaşı*> /n pl *-yya*/ *[mil, obsol]* captain (replaced by the rank of *naqiib*).

ى ز ر ج
يازرجة *yazirga* <perh P *zâycha*> /n pl *-aat*/ table of magic numbers and letters used in telling fortunes etc. - also *zayirga*.

ى ز و ل
يزول *yazool* <prob Engl> /n/ lysol.

- ى س ت ف
يوستفندى *yustafandi* <prop n> /coll n/ tangerine(s). - also *yusafandi, yuusıf ʕafandı, yusfi, safandi, ʕistafandi*.
يوستفندّيايه *yustafandiyyaaya* /unit n, pl *-aat*/ a tangerine. - also *yusafandiyyaaya, yuusif ʕafandiyyaaya, safandiyyaaya, ʕistafandıyyaaya*.

ى س ر ¹
يسر *yusr'* /n/ **1** ease, facility. **2** wealth, affluence.
يسر *yasir: maaʕ yasir* soft water.
أيسر *ʕaysar* /el/ easier/easiest.
يسير *yasiir* /adj, fem *yisra, yasıira*/ easy. ‖*mayya yisra* soft water.
ميسرة *maysara* /n/ comfort, wealth, prosperity. *naas ɛanduhum maysara* well-to-do people. *ɛeela ɛayfa f-maysara* a well-off family.
ميسور *maysuur* /adj */ well-off, well-to-do. *ʕeef gab-na lin-naas il-maysuriin il-ḥaal dool* what are we compared with those rich people?
يسّر *yassar* /vt/ **1** to facilitate. **2** to ease the financial circumstances of (s.o.). - vn *taysiir*; ava *miyassir, mıyassar*; pva *muyassar*.
ميسّر *muyassir* /n/ Facilitator (epithet of God).
اتيسّر *ʕityassar* /vi/ **1a** to become easy, be made easy. **1b** to thrive, become prosperous. *ʕir-raagil da mityassar* that man is well-off. **2** to be possible. *ʕidfaɛ illi yityassar-lak* pay what you can. - ava/iva *mityassar*.
تيسّر *tayassar*↑ = *ʕityassar. ma tayassar* what's available. *kul ʕahi luqma ɛala ma tayassar* ≈ help yourself to a bite of what's going. *ʕif-feex ḥa-yiqra ma tayassar min il-qurʕaan* the sheikh will read certain verses of the Koran.

ى س ر ²
اليسار *ʕil-yasaar* /n/ the (political) left.
يسارى *yasaari* **1** /adj */ leftist, left-wing. **2** /n */ a leftist.

ى س ر ³
يسر *yusr²: sibḥa yusr* precious black coral or jet prayer beads studded with silver.

ى س ر [4] see ء س ر [1] : *yusara*

ى س ر ب
يسرب *yasrib* /prop n/ *[obsol]* pre-Islamic name of Medina in Arabia. *ʕin ʃa-lla titwiʒid bil-ħigg' w-bi-zyaarit ʕarq' yasrib [Isl]* may you make the pilgrimage (to Mecca) and visit Medina!

ى س ف ن –
يوسفندى *yusafandi* <prop n> /coll n/ tangerine(s). - also *yustafandi, yuusif ʕafandi, yusfi, safandi, ʕistafandi.*
يوسفنديّاية *yusafandiyyaaya* /unit n, pl *-aat*/ a tangerine. - also *yustafandiyyaaya, yuusif ʕafandiyyaaya, safandiyyaaya, ʕistafandiyyaaya.*

ى س ف ى
يوسفى *yusfi* <prop n> /coll n/ tangerine(s). - also *yusafandi, yustafandi, yuusif ʕafandi, safandi, ʕistafandi.*

ى س م ى ن
ياسمين *yasmiin* <P *yâsamîn*> /coll n/ jasmine. *yasmiin baladi* common jasmine. ‖*yasmiin hindi* pagoda tree, frangipani.
ياسمينة *yasmiina* /unit n, pl *-aat*/ a jasmine flower or plant.
ياسمينايّة *yasminaaya = yasmiina.*

ى س و ع
يسوع *yasuuʒ* /prop n/ *[Chr]* Jesus.
يسوعى *yasuuʒi* /n */ Jesuit. *ʕil-ʕabaaʕ il-yasuʒiyyiin* the Jesuit Fathers.

ى س ى ن
ياسين ، يس *yasiin* /prop n/ name of the thirty-sixth sura of the Koran (see also *ʒiddiyyit yasiin*).

ى ش ب
يشب *yaʃb* /n/ jasper.

ى ش م ك
يشمك *yaʃmak* <T *yaşmak*> /n/ *[obsol]* face-veil.

ى ع ن ى see ع ن ى : *yaʕni*

ى غ م
يغمة *yaɤma* <P *yaghmâ*> /n/ booty, plunder. ‖*ʕil-ħikaaya baqit yaɤma* the affair turned into a free-for-all.

يغمجى *yaɤmagi* /n pl *-yya* plunderer, grabber.

ى غ ن ى ش
يغنيس *yaɤniiʃ: ʕil-ɤiff' wil-yaɤniiʃ* deceit.

ى ف ط
يافطة *yafṭa* <T *yafta*> /n pl *-aat, yufaṭ*/ sign-board, notice-board, something written for display. *yafṭit dukkaan* shop sign. *yafṭit qurʕaan* a verse or phrase from the Koran written in calligraphy for display. - also *lafta.*

ى ق ظ
يقظ *yaqiẓ* /adj */ alert, vigilant.
يقظه *yaqaẓa* /n/ wakefulness. *ma-ɢdirt'-ʃ ʕasaddaq ɛenay-ya - ʕana f-yaqaẓa walla f-manaam* I couldn't believe my eyes! Was I awake or just dreaming?
اتيقّظ *ʕityaqqaẓ* /vi/ to become alert, vigilant or cautious. - vn *tayaqquẓ*; ava *mityaqqaẓ.*
مستيقظ *mistayqiẓ* /adj */ alert, vigilant.

ى ق ن
يقين *yaqiin* /n/ certainty. ‖*yaqiin-i bi-llaah yaqii-ni* my faith in God protects me. *ɛala yaqiin* sure, as in *ʕana ɛala yaqiin ʕinnu lissa ma-waṣal-ʃ* I am dead sure he hasn't yet arrived.
يقينى *yaqiini* /adj/ certain, absolute. *furuuq fibh' yaqiniyya* disputable assumptions.
اتيقّن *ʕityaqqan* /vi/ to make sure (of s.th.). *kaʃaft' ɛak-kilma fil-qamuus ɛaʃaan ʕatyaqqan min maɛnaa-ha* I looked up the word in the dictionary to be sure of its meaning. - ava *mityaqqan.*

ى ق و ت
ياقوت *yaquut* /n/ ruby. ‖*yaquut ʕaṣfar* topaz.
ياقوته *yaquuta* /unit n, pl *-aat*/ a ruby.
ياقوتى *yaquuti* /adj invar/ of or pertaining to ruby. *ʕaħmar yaquuti* ruby-red.

ى ك ا ه
يكاه *yakaah* <T *yegâh* from P> /n/ *[mus]* **1** name given to the note G below middle C. **2** mode in Arabic music beginning on bottom G and having B flat and E flat.

ى ك ك
يك *yakk* <P *yak*> /n/ one (in dice). *xaanit il-yakk* first point (on a backgammon board). ‖*ʕitzanaq fi xaanit il-yakk* he is in a tight corner, he's been trapped.

ى ل ك
يلك *yalak* <T *yelek*> /n pl *-aat/ [obsol]* (woman's) vest, waistcoat.

ى ل ل ا
يلا *yalla* /interj/ come on! get on! move! *yalla biina* let's go! let's get on with it! *yalla kul* come on, eat! *yalla nnaam* let's go and lie down! ‖*yalla s-salaama* ≈ God protect us! (to ward off disaster).
¶ *ma-tyalla* come on! get moving!

ى ل ى
يولية *yulya* /n/ July.
يوليو *yulyu* /n/ July.

ى م خ ا ن
يمخانة *yamaxaana* <T *yemekẖane*> /n pl *-aat/ [mil, obsol]* mess. ‖*ʃinta fakir-ha yamaxaana hina* do you think this place is a free feeding house?! - also *yamakxaana*.

ى م ش see ى م ى ش : *yamiiʃ*

ى م ك
يمك *yamak* <T *yemek*> /n/ *[mil, joc]* food, chow (particularly lentils).
يمكخانة *yamakxaana* /n pl *-aat/ [mil, obsol]* mess. - also *yamaxaana*.
يمّيك *yammiik* /n/ *[mil, joc]* glutton, chow hound.
يمّك *yammik* /vi/ *[mil, obsol]* to wolf one's food. - ava *miyammik*.

ى م م [1]
يمّ *yamm* /n/ direction. *ruḫt' yamm il-baab* I went towards the door. *ʃiwɛa tiigi yamm-u-hum* don't come near them!
يمّة *yamma* /n/ side. *fil-yamma l-biɛiida* on the far side.

ى م م [2]
اتيمّم *ʃityammim* /vi/ *[Isl]* to perform ritual purification of oneself with sand or dust (in the absence of water). - vn *tayammum*; ava *mityammim*.

ى م م [3]
يمام *yamaam* /coll n/ dove(s). ‖*zayy beeḍ il-yamaam ya ɛinab [vendor's cry]* ≈ grapes as large and rich as doves' eggs!
يمامة *yamaama* /unit n, pl *-aat/* a dove.

ى م ن [1]
يمن *yumn* /n/ good luck, good fortune, prosperity. *ɛiid saɛiid yiɛuud ɛaleekum bil-yumn' wil-barakaat* happy feast, may it return with all prosperity and blessings.
يمين *yimiin[1], yamiin[1]* **1** /n/ **1a** right(-hand side). *ɛala ymiin if-faariɛ* on the right-hand side of the street. ‖*ɛuḍw il-yimiin [leg]* second-ranking judge on a three-judge panel. **1b** *ʃil-yimiin, ʃil-yamiin* the (political) Right. **2** /adj invar/ right, right-hand. *ʃin-naḫya l-yimiin min if-faariɛ* the right-hand side of the street. - /adverbially/ *liff' ymiin* turn right! *yimiin duur [mil]* right face!
يميني *yimiini, yamiini* **1** /adj */ rightist, right wing. **2** /n */ a rightist.
أيمن *ʃayman↑* /adj/ right(-hand side). *ʃil-ganaaḥ il-ʃayman [soccer]* the right flank.
ميمنة *maymana* /n/ right side. *geef il-maymana [mil]* the right flank. ‖*ʃaṣḥaab* (or *ʃahl) il-maymana [Isl]* the blessed.
ميمون *maymuun* **1** /adj/ blessed. *qiraan maymuun* blessed marriage! **2** /n/ monkey attached to a street performer.
ميموني *maymuuni* /n/ type of *maʃrafiyya* pattern (see Pl.G, 13).
تيمّن *tayammun↑* /n/ auspiciousness.
¶ *tayammunan* /adv/ as a good omen. *fii naas tisammi ʃawlad-ha mḫammad tayammunan bi-sm in-nabi* there are people who name their children Muhammad hoping to invoke the blessing of the Prophet's name.

ى م ن [2]
اليمن *ʃil-yaman* /prop n/ Yemen.
يمني *yamani* **1** /adj */ Yemeni. ‖*ḫamaam yamani* large variety of pigeon, not generally domesticated, although a household may keep one for good luck. **2** /n */ a Yemeni.
يماني *yamaani* = *yamani*. ‖*ʃir-rukn il-yamaani [Isl]* corner of the Kaaba which pilgrims touch or point at as part of the pilgrimage ritual.

ى م ن [3]
يمين *yimiin[2], yamiin[2]* /n/ **1** /pl *ʃaymaan, ʃaymanaat↓*/ oath. *ɛalayya l-yamiin* I swear. *ḫilift' ymiin biṭ-ṭalaaq min miraat-i m-akallim-u* I swore that my wife would be divorced if I spoke to him. ‖*wi-maa-lak ɛalayya yimiin* ≈ and although you have no right to demand an oath from me that the case is so, nevertheless I swear it is. — *ʃaymaan, ʃaymanaat↓* /pl n/ **2** descriptive intensifier. *huwwa ṭaaliɛ diin ʃaymaan ʃahl-u fiʃ-fuvl* ≈ he's working fit to bust a gut.

ي م ي ش
يا‌ميش *yamiiʃ* <T *yemiş*> /n/ nuts and raisins (especially as ingredients for sweets) sold during Ramadan.

ي ن ا ن
اليونان *ʕil-yunaan* /prop n/ Greece.
يونانى *yunaani* **1** /adj */ Greek. ‖*ʔaalib yunaani* last for a round-toed shoe. **2** /n */ a Greek. **3** /n, no pl/ the Greek language.

ي ن ا ي ر
يناير *yanaayir* /n/ January.

ي ن ب و ع see ن ب ع : *yanbuuʕ*

ي ن س و ن
ينسون *yansuun* /n/ aniseed; a hot drink made of the same.

ي ن ص ي ب see also ن ص ب [1]
يانصيب *yanaṣiib, yaanaṣiib* /n/ lottery. *waraʔit il-yanaṣiib* lottery ticket.

ي ن ن ي
ينى *yanni* /prop n/ Greek male given name. ‖*sakrit yanni* ≈ as drunk as a Greek barman can make one.

ي ن ي
يونية *yunya* /n/ June.
يونيو *yunyu* /n/ June.

(ي ه)
يا *yih*[1] /fem n, pl *-aat*/ twenty-eighth and last letter of the Arabic alphabet. - also *yaa, yaaʃ, yeeh*.
يه *yih*[2], *yuh, yah* exclamation indicating wonder, admiration or awe.

ي ه و د see further under ه و د [2]
يهودى *yahuudi* /pl *yahuud*/ **1** /adj/ Jewish. **2** /n/ a Jew. *ʃaflas min il-yahuudi f-yoom is-sabt [prov]* more broke than a Jew on the Sabbath. ‖*yahuudi (ʃibn*[i] *yahuudi)* a miser. - *ʃil-yahuudi lamma yfallis yifattif fi-dafatr-u l-ʔadiima [prov]* (when a Jew goes bankrupt he looks through his old ledgers) ≈ when a man goes bankrupt he'll imagine all sorts of debts owed to him. - *ʃiṯḫawagu lil-yahuudi - ʔaal il-yoom ʕiid-i [prov]* (they needed the Jew's help; he said 'Today is my feast day') ≈ he who is unwilling to help will always find a good excuse.
يهوديّة *yahudiyya* /n/ **1** Judaism. **2** simple variety of backgammon.

ي و ج ا
يوجا *yuuga, yooga* <Engl> /n/ yoga.
يوجى *yuugi, yoogi* <Engl> /n pl *-yya*/ yogi, teacher of yoga, expert in yoga.

ي و د
يود *yuud* /n/ iodine. *sabʏit yuud* tincture of iodine.

ي و ر see ي ا و ر : *yaawir, yawraan*

ي و س ف
يوسف أفندى *yuusif ʃafandi* <prop n> /coll n/ tangerine(s). - also *yustafandi, yusafandi, yusfi, safandi, ʃistafandi*.
يوسف أفنديّاية *yuusif ʃafandiyyaaya* /unit n, pl *-aat*/ a tangerine. - also *yusafandiyyaaya, safandiyyaaya, ʃistafandiyyaaya*.

ي و م
يوم *yoom* /n pl *ʃayyaam*/ **1** day. *kull*[i] *yoom* every day. *ʕafart iyyaam* ten days. *ʔabl*[a] *ʃaaxir if-ʃahr*[i] *b-yomeen* two days before the end of the month. *ṭabaʔ il-yoom* the dish of the day. *yoom it-talaat* Tuesday. *yoom il-ḥisaab* Judgement Day. ‖*yoom ʕasal wi-yoom baṣal [prov]* there are good days and bad days. - *ʃibn*[i] *yomeen ma-yʕiiʃ-ʃ*[i] *talaata [prov]* ≈ no man can exceed his allotted life span. - *hiyya ʕala yom-ha w-lelit-ha* she's about to give birth. - *fi-yoom min il-ʃayyaam* (1) one day, one of these days. (2) once upon a time. - *yom-ha* and *yomii-ha* at that time, the same day. - *min yom-ha* and *min yomii-ha* since that day, from that day on, as in *gidd-i ṭiliʕ fi-ʔurʕit il-ḥigg*[i] *w-min yom-ha l-beet zayy*[i] *xaliyyit in-naḥl* my grandfather's name came up to go on pilgrimage and from that day on the house has been like a beehive! - *min yoom-* ≈ from the start, as in *ʃana kida min yoom-i* I've been like this since the day I was born, *min yoom-i w-ʃana naḥs* I've been unlucky all my life. - *ʃil-yomeen dool* or *ʃil-ʃayyaam di* these days, nowadays. - *zayy il-yomeen dool* at about this time last year. - *yoom-u b-ʕafara* he's very slow. **2** appointed time. *kull*[i] *waaḥid liih yoom [prov]* ≈ every dog has its day. *rabb-i-na yigʕal yoom-i ʔabl*[i] *yoom-ak* may my time of death be before yours. — *ʃayyaam* /pl n/ **3** (particular) period of time. *ʃayyaam il-faraʕna* (in) the days of the Pharaohs. *ʃayyaam id-diraasa* school days. *ʃayyaam zamaan* (in) the old days, the past. ‖ *ʃayyam-ha* at that time, in those days, as in *kaan ʃayyam-ha sinn-u ʃaʔall*[i] *min ʕifriin sana* at that time he was less than twenty years old.
¶ *yoom ma* /conj/ (on) the day when. *yoom ma-ftaret-ha*

(on) the day when I bought it. *huwwa qaarif malḥit-na min yoom ma rafaḍna ʕibn-u* he's had it in for us since the day we refused his son (in marriage). - *ʕayyaam ma* /conj/ (in) the days when. *ʕayyaam ma kaan fii niẓaam* (in) the days when things were run properly. *ʕayyaam ma kaan ig-gineeh gineeh* in the good old days (when a pound was a pound).

يومى *yoomi* **1** /adj/ daily. *birnaamig yoomi* daily schedule. *gariida yomiyya* daily newspaper. **2** /adv/ every day. *da b-yiigi hina yoomi* he comes here every day. ¶ *yomiyyan, yawmiyyan* /adv/ daily.

يوميّة *yomiyya* /n pl *-aat*/ **1** daily pay rate, daily wage. *bi-yiftaɣal bil-yomiyya* he works on a daily rate. **2a** day's labour. *baʓd' yomiyyit-i ruḥt' lil-mudiir* after my day's work I went to (see) the director. **3** (also *daftar il-yomiyya*) *[admin]* daybook. **4** /only in constr/ the day of. *min yomiyyit il-ḥadsa* since the day of the accident.

يوميّات *yawmiyyaatˀ* /pl n/ diaries.

يوماتى *yomaati* /adv/ daily. *yomaati b-aqabl-u hnaak* every day I meet him there.

مياومة *miyawma* **1** /adv/ on a daily basis. *ʕittafaq ʕinnu yiftaɣal-li myawma* he agreed that he would work for me by the day. **2** /n/ work on a daily basis. *bi-yiftaɣalu bil-miyawma* they work by the day.

ى و ه

يوه *yooh, yuuh* exclamation indicating exasperation. *yooh ʕinta lissa gaay* and here you come after all this time! *yooh da-na nsiit* oh rats, I forgot! ‖*yooh gat-ak ʕeeh* expression of delight (in joking).

ى و ى و

يويو *yuuyu* <Engl> /n pl *yuyaat*/ yo-yo.

ى ى ه

ييه *yeeh* /n pl *-aat*/ twenty-eighth and last letter of the Arabic alphabet. - also *yaa, yaaʕ, yih*.

ILLUSTRATIONS

LIST OF PLATES

Plate A : Vessels 971

Plate B : Implements and Containers 972

Plate C : Rural Items 973

Plate D : Agricultural Implements 974

Plate E : Irrigation and Cultivation 975

Plate F : Apparel 976

Plate G : *Mafrafiyya* work 977

Plate H : *Xiyamiyya* work 978

Plate H : *Xiyamiyya* work 979

Plate I : Pipes 980

Plate J : Musical Instruments 981

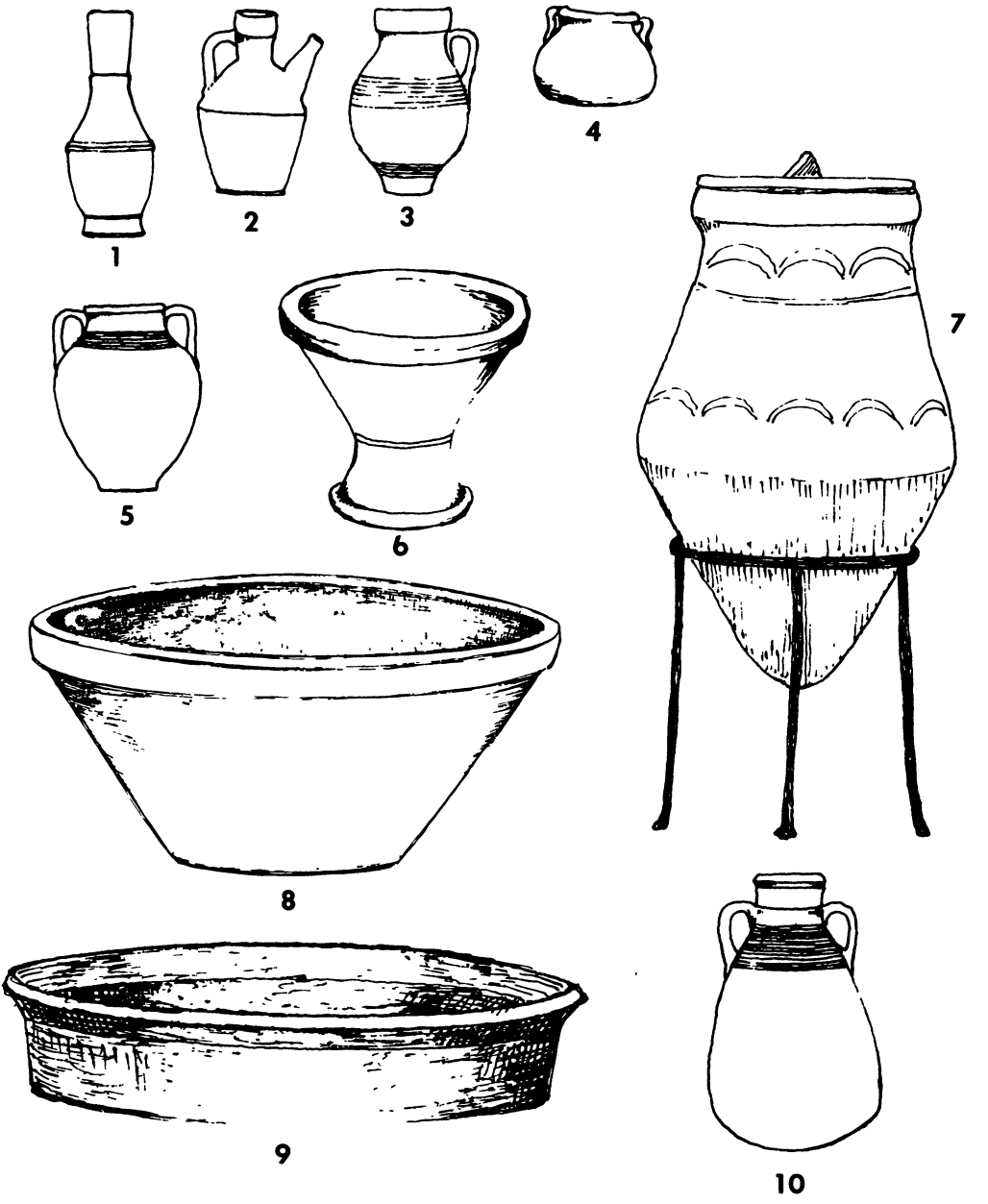

1 *ɋulla*
2 *ʃabriiɋ*
3 *maɦlaba*
4 *burma*
5 *ɋidra*
6 *manɋad, mawɋad*
7 *ziir*
8 *maguur*
9 *ʈiʃt*
10 *ballaaʂ, ballaaʂi, garra, zalɛa*

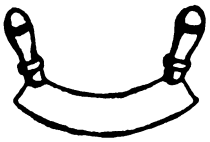

1



2



3

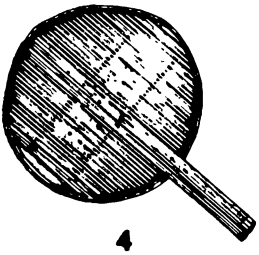

4

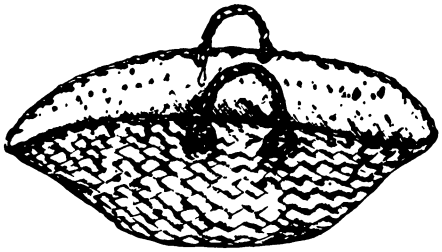

5



6



7

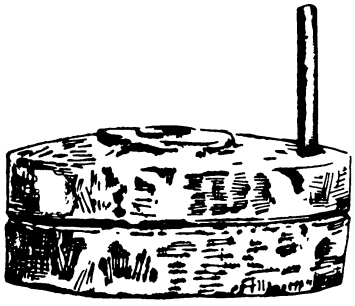

8

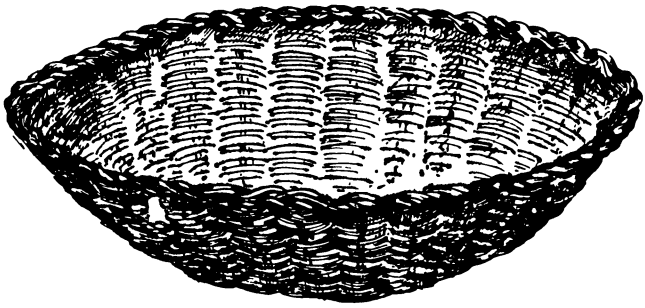

9

1 *maxraṭa*
2 *lamba ṣafiiḥ, lamba ʃawwaaṭi, lamba saruux, lamba b-simbila*
3 *kanaka*
4 *maṭraḥa*
5 *ʁalaq̣*
6 *mufraak*
7 *maq̣ṭaf*
8 *raḥaaya*
9 *mifanna*

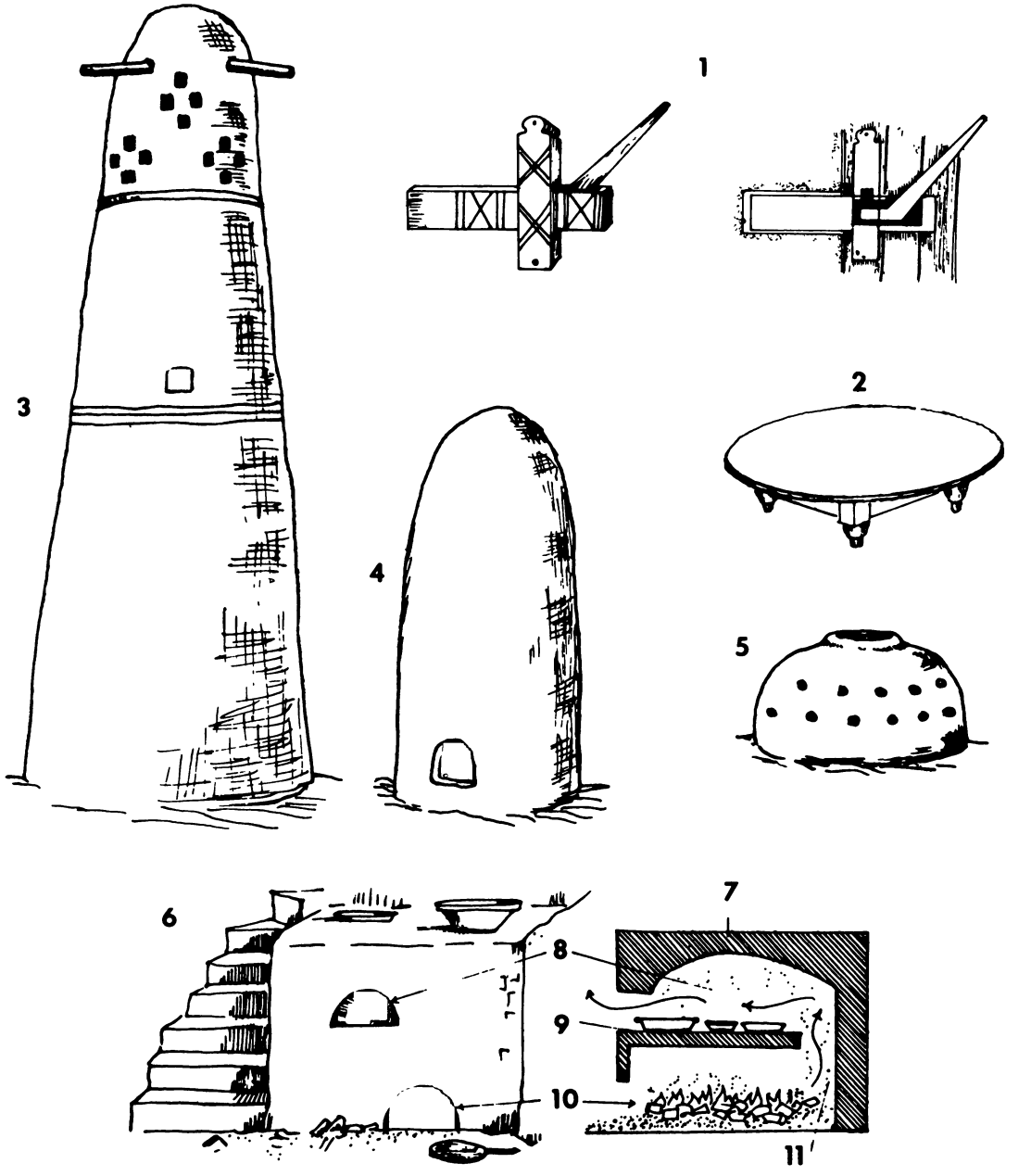

1 *ḍabba*
2 *ṭabliyya*
3 *burg' ḥamaam*
4 *ṣumáʕa, maxzan ʏalla*
5 *xumm, xunn, ṣumáʕa*
6 *furn*
7 *ḳubba*
8 *ʕarṣa*
9 *balaaṭa, ʕarṣa*
10 *miḥma*
11 *faruuḳa*

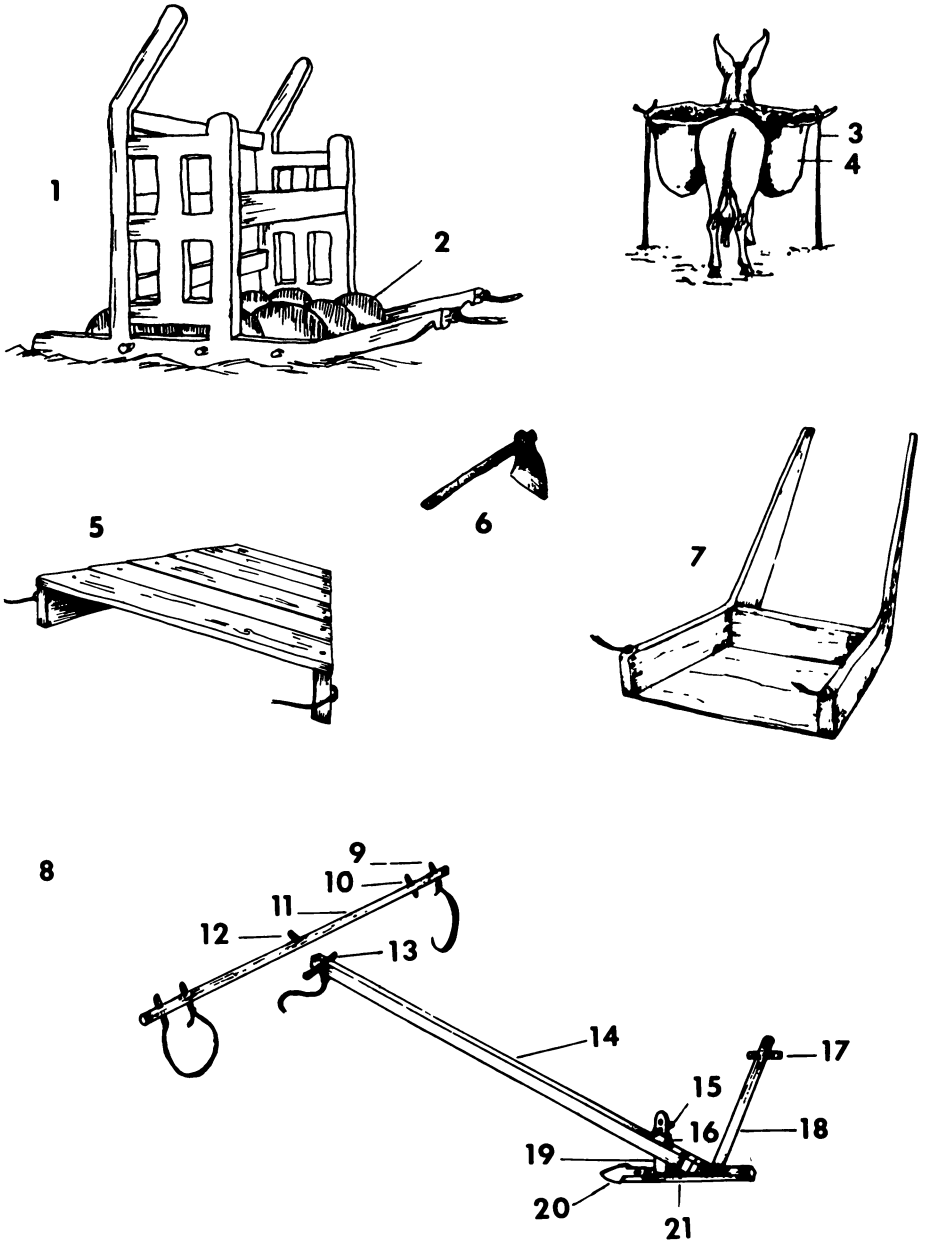

1 *noorag*
2 *falaka*
3 *fiʕba*
4 *ʏabiiɻ*
5 *battaana*
6 *faas*
7 *qaṣṣabiyya*
8 *miḥraat*
9 *difiida, ɢunnaafa*
10 *ʕaṣfuura*
11 *naaf*
12 *faahid, ʕaṣfuura*
13 *ɢantuut, bantuut, lantuut*
14 *ɢoos*
15 *ʕaɢrab*
16 *ḍufdaʕa*
17 *ɢabḍa*
18 *rumḥ*
19 *balanga*
20 *silaaḥ*
21 *basxa, baṣxa*

Plate E : Irrigation and Cultivation

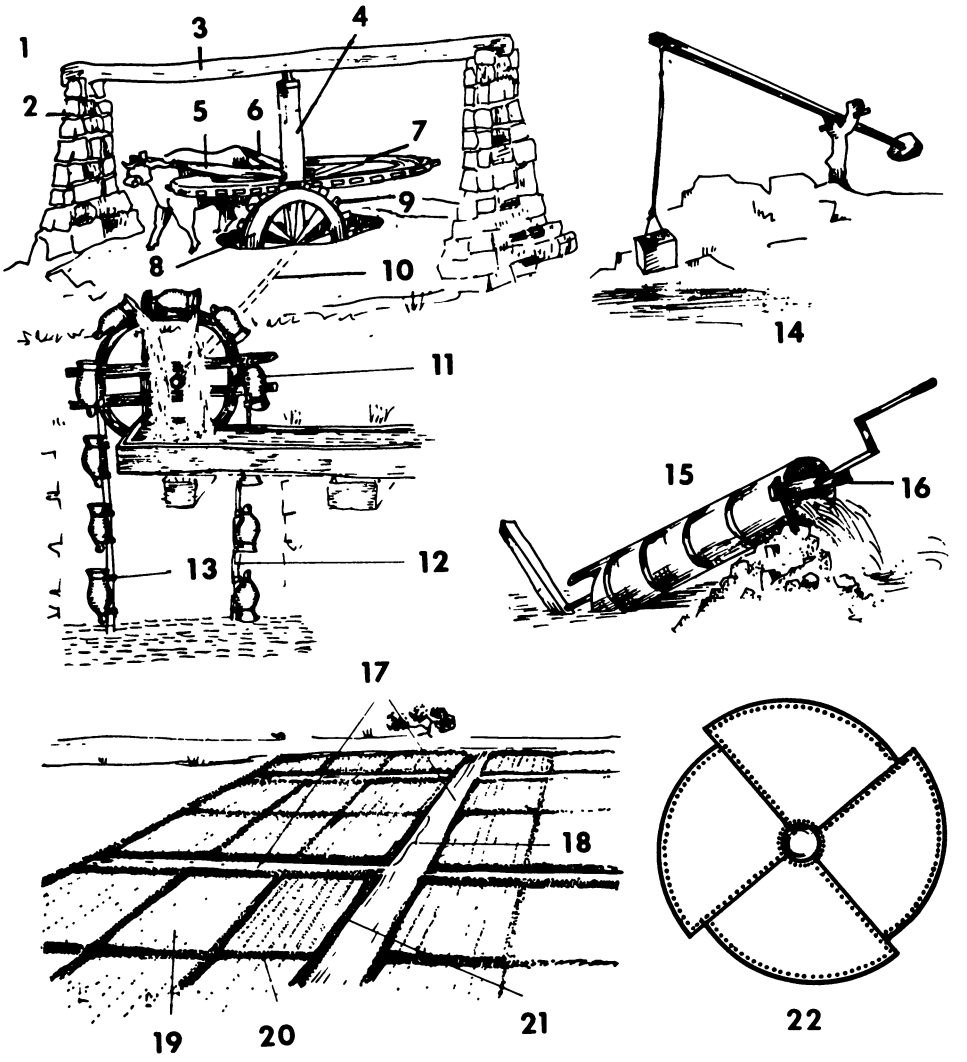

1 *saqya*
2 *ṣaduud*
3 *gazya*
4 *dabbuus, ʕaruuṣa, harmiis*
5 *naaf*
6 *hudya*
7 *kibiir*
8 *ṣaʏiir*
9 *ḍirs*
10 *sahm*
11 *ɋaduus*
12 *tuunis, ʈuunis*
13 *kilaala*
14 *faduuf*
15 *baddaala, ɦalazoona, ʈambuur*
16 *warf*
17 *misɋa, ʕabbaara, ʕabbuura, faɦl, qanaaya*
18 *farda*
19 *beet*
20 *bitn, bitniyya, riwaal*
21 *riifa*
22 *tabuut, ɦalazoona, ɦalluufa, ʈambuur, ʈambuufa*



1 *ʈaqiyya*
2 *tarfiiḫa, talfiiḫa, talfiiʕa*
3 *sideeri*
4 *baʃliik*
5 *gallabiyya baladi*
6 *bulʏa*
7 *qaṣabit burqu'ʕ*
8 *burquʕ*
9 *tarbiiʕa, mandiil raas*
10 *ʈarḫa*
11 *gallabiyya samra*
12 *ʕimma*
13 *ʈarbuuf*
14 *ʃaal*
15 *kakuula*
16 *quftaan*
17 *milaaya*
18 *ʕabaaya*
19 *qubqaab*
20 *kirdaan*

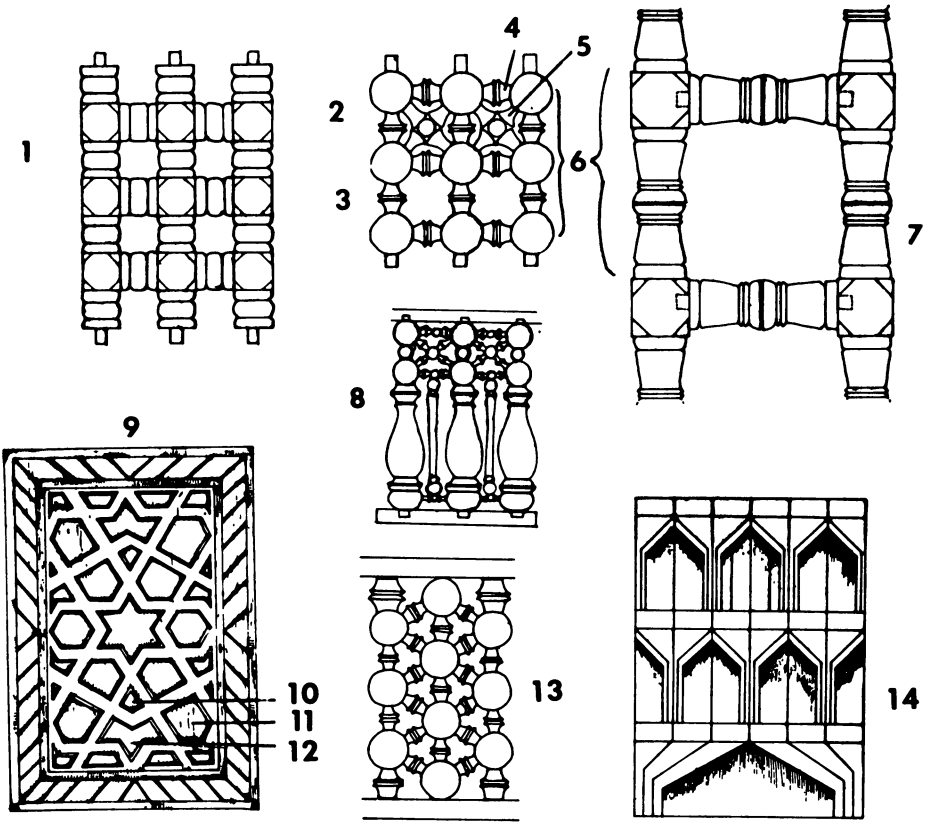

1 *ṣahriigi dayyaq*
2 *ṣaliib malyaan*
3 *ṣaliib faaḍi*
4 *farx*
5 *ɂambuuɛa*
6 *mixarraz*
7 *ṣahriigi waasiɛ*
8 *kanaysi*
9 *ḥafw[i] baladi*
10 *sarwa*
11 *kinga*
12 *nuṣṣ[i] nigma*
13 *maymuuni misaddis*
14 *miɂarnas*

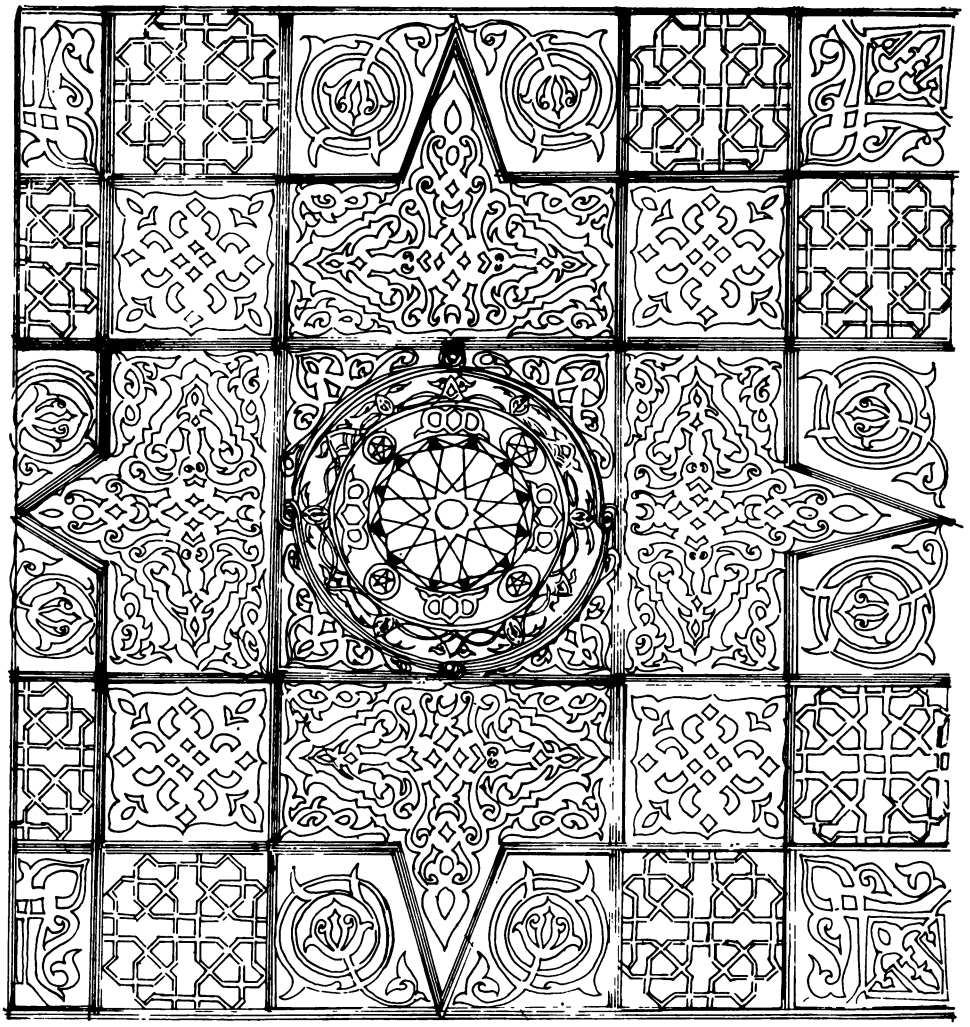

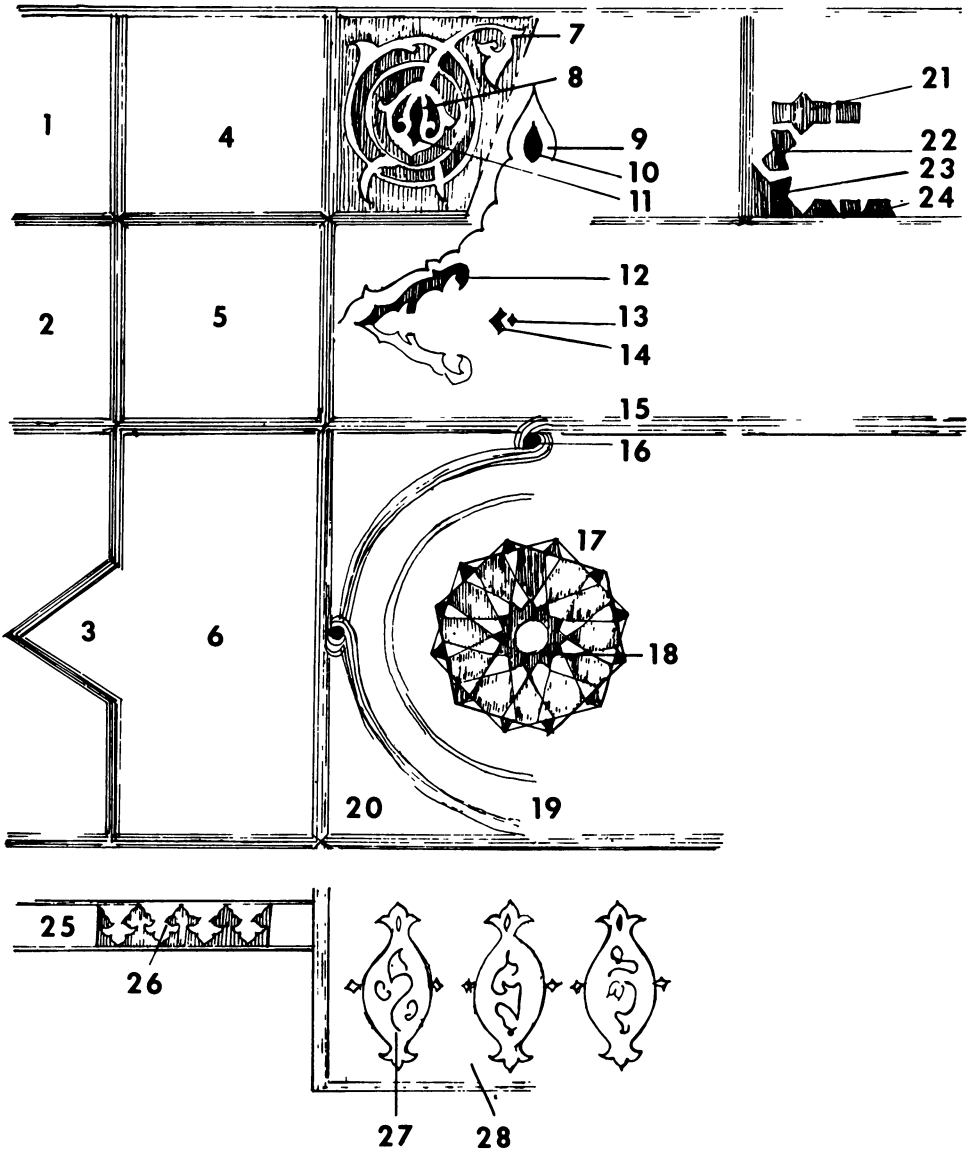

1 *rubɛ*
2 *nuṣṣ*
3 *sinn*
4 *tarbiiɛa*
5 *buqga*
6 *ḥooḍ*
7 *ḍufr*
8 *zahra*
9 *looza salt*
10 *balaḥa*
11 *famɛa*
12 *raas tiɛbaan*
13 *buqga*
14 *libaas*
15 *ɋadda*
16 *nuqṭa*
17 *ṭabaq baladi*
18 *xaatim*
19 *rank*
20 *kaɛb*
21 *luqma*
22 *maxnuuqa*
23 *rukn*
24 *kursi*
25 *farafa*
26 *zahra kaff is-sabɛ*
27 *turunga*
28 *talbiisa*

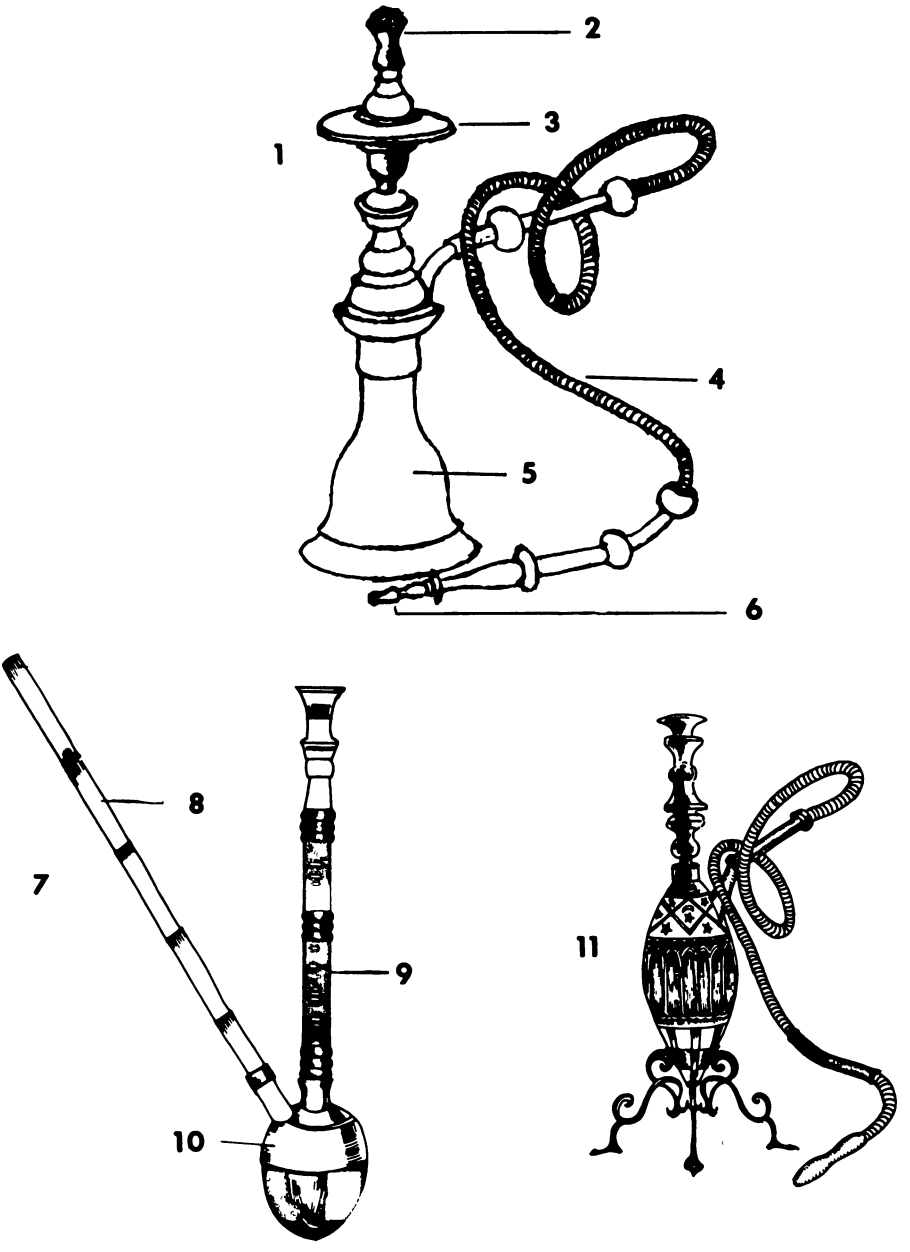

1 *ʃiiʃa*
2 *ḥagar*
3 *ʈaasa*
4 *layy*
5 *bannuura, dooraç*
6 *mabsam, fumm*
7 *gooza*
8 *buuṣa, ʏaaba*
9 *çalb*
10 *bukʃa*
11 *buuri*

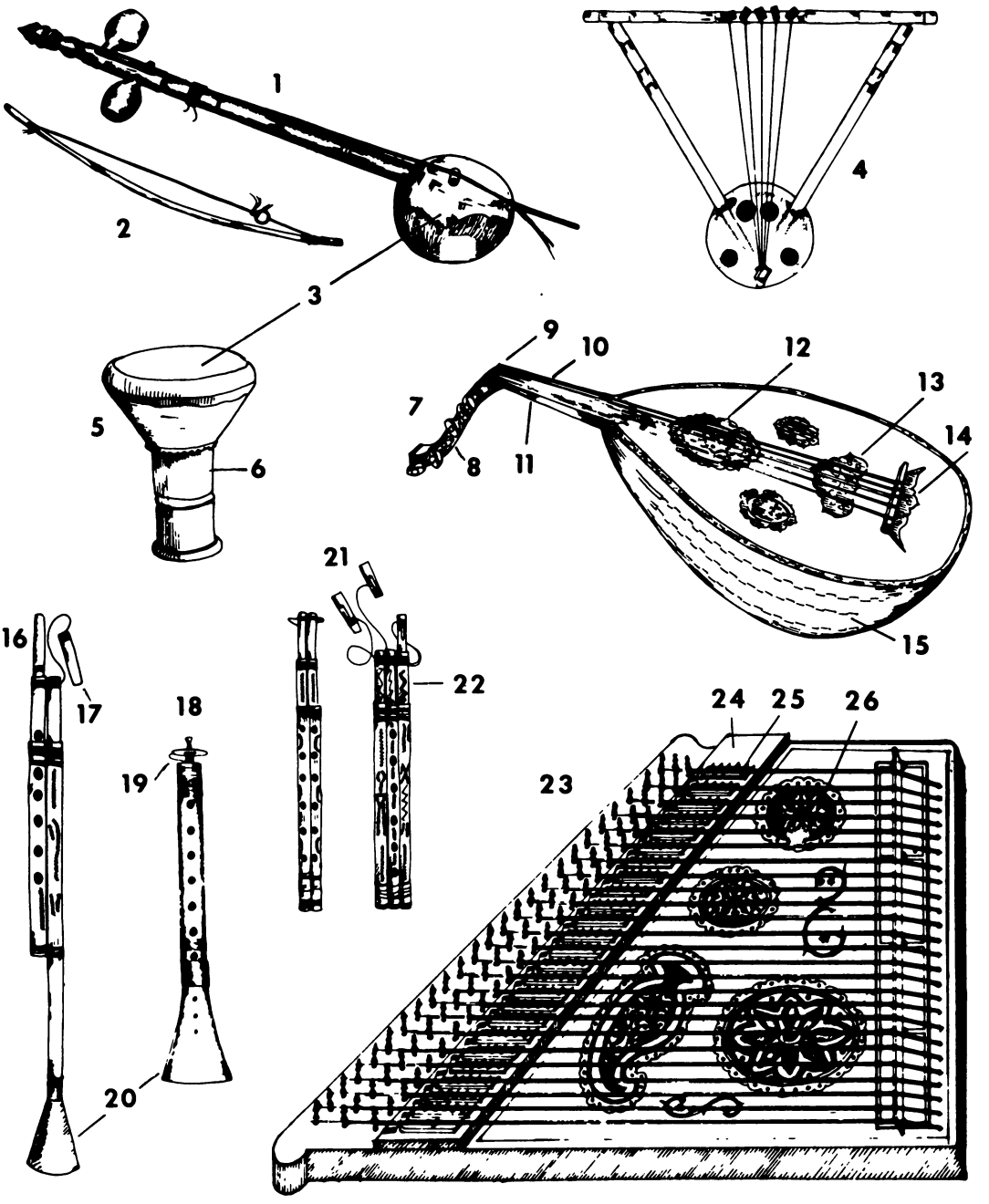

1 *rabaaba*
2 *ɋoos*
3 *raɋma*
4 *simsimiyya*
5 *ʈabla*
6 *ɧuɋɋ*
7 *ɛuud*
8 *bangaɋ*
9 *ʃinf*
10 *miraaya*
11 *raɋaba*
12 *ʃamsiyya*
13 *raɋma*
14 *farasa*
15 *ɋaʂ9a*
16 *ʃarʏuul*
17 *mabsam, baluuʂ*
18 *muzmaar baladi*
19 *mabsam*
20 *buuɋ*
21 *muzmaar turki*
22 *rakiiza*
23 *ɋanuun*
24 *masʈara*
25 *ɛarba*
26 *ʃamsiyya*